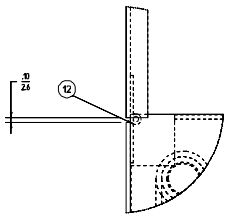

Detail1
Scale 1:1

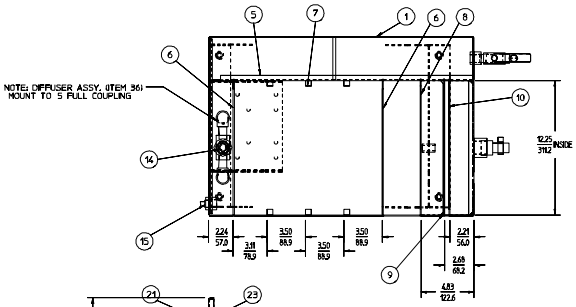

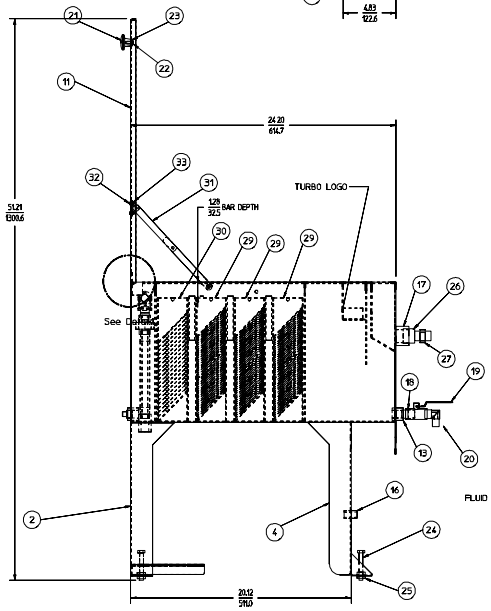

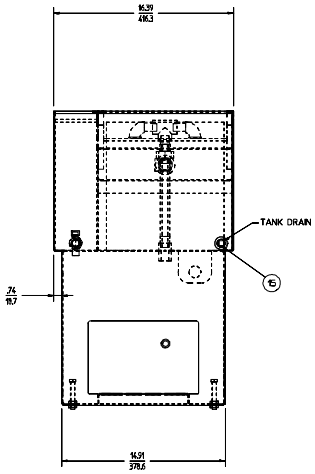

NOTE: COOLANT OPERATING
CAPACITY IS 12.8 GALLONS.

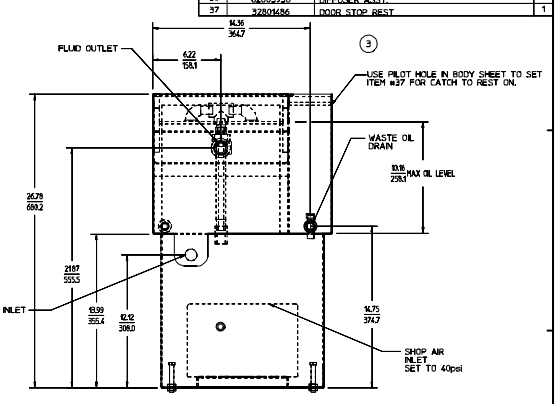

NOTES FOR WELD: WELD WATER TIGHT
GRIND ALL CORNERS SMOOTH.
NOTES FOR ASSY: USE PIPE DOPE ON ALL PIPE THREADS.

BOM: 62808443

No.	Part Number	Description	Qty
1	C2801113	BODY	1
2	C2800679	INLET-SIDE	1
3	C2800680	OUTLET-SIDE	1
4	C2800681	LEG	1
5	C2801114	CENTER-PANEL	1
6	C2800683	BAFFLE	2
7	32800684	GUIDE	6
8	C2800685	INTERNAL-SKIMMER	1
9	C2800686	DAM	1
10	C2800687	WEIR	1
11	C2801115	LID	1
12	32800689	HINGE	1
13	98711051	HALF-NPT-COUPLING	2
14	98711228	COUPLING-5INCH-FULL	1
15	88711253	HALF-NPT-PLUG	1
16	88711211	COUPLING-25	1
17	98711042	COUPLING-1IN-HALF	1
18	88701004	NIPPLE-SHORT-SH	1
19	98721053	BALL-VALVE	1
20	98712315	5/8X1/2NPT-90-BARB	1
21	98801022	KNOB	1
22	88261014	BHCS-.25-20X.5	1
23	88551009	WASHER-0.25-20	1
24	88201040	HHCS-.375-16X2.5	4
25	88501620	HEX MACHINE NUT 3/8-16	8
26	98711386	1-INCH-BARBED-FITTING	1
27	98741023	HOSE-CLAMP	1
28	71902606	HOSE-CLEAR-TUBE (NOT SHOWN)	48IN
29	62806080	PLATE-MODULE-.125-C.S.	3
30	62806081	PLATE-MODULE-.250-C.S.	1
31	98801155	FOLDING-SUPPORT	1
32	88301068	SCREW-SLOTTED-8-32X.375	3
33	88501610	HEX-NUT-8-32	3
34	62805919	LABEL PACKAGE (AIR)	1
35	98721168	GALLON PLASTIC BOTTLE (NOT SHOWN)	1
36	62805958	DIFFUSER ASSY.	1
37	32801486	DOOR STOP REST	1

E.C.O. #	REV #	DESCRIPTION OF CHANGE	BY	DATE
21045	E	ENLARGED HOLES FOR COUPLINGS IN INLET AND OUTLET SIDES	JM	06Jan2006
18148	C	ADDED .5 LIP FOR STRENGTH.	ENGTMP	23May2002
18383	B	ADDED DOOR STOP FOR DOOR CATCH.	TDS	30Dec2002
18201	A	ADDED DIFFUSER ASSY.	TDS	26Sep2002

DO NOT SCALE DRAWING
DIMENSION FORMAT NOTES ON SHEET 1 OF 1
SUPERSEDES
SUPERSEDED BY
SPILLAR TO

PRINTED IN CHINA
ISO 9001 2000 REGISTERED
PRECISION FIRST ANGLE

NOTE: DATE 21Aug2002 | CHECKED BY silvert | DRAWN TDS | SCALE 1:4 | DESCRIPTION CPS-JR-OT | WEIGHT --- | SHEET 1 OF 1

THIS PART IS PROPERTY OF BASIC PRINTING CORPORATION. THIS PART IS PROPRIETARY AND CONFIDENTIAL. THIS PART IS NOT TO BE REPRODUCED OR DISCLOSED TO OTHERS OR USED FOR ANY PURPOSE OTHER THAN THE PERMISSION FROM BASIC PRINTING CORPORATION.

SIZE D | DRAWING NO. 62808443 | REV 5