Steel Fabrication Solutions

AHB

TOOLING & MACHINERY

COMPLETE METALWORKING SOLUTIONS

(800) 991-4225 www.ahbinc.com

ISO Certified customerservice@ahbinc.com

Steelmax®

The tools of innovation.

Tools for the Steel Fabricator

Steelmax offers a wide range of tools and equipment tailored for the Steel Fabricator and MRO. Our unique, high quality tools reduce costs and increase productivity. They are designed and engineered for long-term, heavy industrial use and built to the highest quality standards of ISO 9001.

The Steelmax product line includes:

- Portable Magnetic Drills and Annular Cutters
- Hydraulic Punches
- Metal Cutting Saws and Blades
- Weld Preparation/Beveling Machines for Plate and Pipe
- Lifting Magnets
- Welding/Cutting Automation Solutions
- Welding Station Equipment

Our qualified and experienced team is available to help our customers solve all of their steel fabrication challenges. Steelmax provides its business partners with innovative products, custom solutions, excellent reliability, and industry-leading after sales services.

Please contact us to help with your fabrication and welding projects to determine the right tools for your application.

Steelmax®

The tools of innovation.

801 W. Mineral Ave. Suite 103, Littleton, CO 80120
121 Southpointe Drive, Bridgeville, PA 15017

303-690-9146 • Fax: 303-690-9172
sales@Steelmax.com

STEELMAX.COM

2023 Catalog Version 1

TABLE OF CONTENTS

PORTABLE MAGNETIC DRILLS
D1 Portable Magnetic Drill . . . 1
D1 Auto Semi-Automatic Magnetic Drill . . . 3
D1 LP Low Profile Electric Drill . . . 5
D1 CDL Cordless Magnetic Drill . . . 7
D1 Special Application Magnetic Drills . . . 9
D1 Pro X Portable Magnetic Drill . . . 10
D250x Portable Magnetic Drilling Machine . . . 12
D200xt Universal Tapping & Drilling Machine . . . 14
D300xt Tapping & Drilling Machine . . . 16
D400xt Industrial Tapping & Drilling Machine . . . 18
D500xt Heavy Duty Tapping & Drilling Machine . . . 20
D1Air ATEX Certified Pneumatic Drill . . . 22
D175 ATEX Certified Pneumatic Drill . . . 23
Magnetic Drill Pipe Attachments . . . 25
Drill Features & Specifications Comparison . . . 26
Drill Accessories: Drill Chucks, Cutting Fluid, Magnetic Pick-Up Tool, Reversing Tapping Heads . . . 30
Tapping Collets & Chucks . . . 31
Vacuum Pad for Mag Drills . . . 33

ANNULAR CUTTERS . . . 35

PORTABLE HYDRAULIC PUNCHES . . . 41

METAL CUTTING SAWS
S14 Metal Cutting Saw . . . 44

SAW BLADES . . . 45

BEVELING MACHINES
BM18 Portable Beveler . . . 48
BM20 Plus Portable Beveler . . . 50
BM21 Portable Beveler . . . 52
BM21SS Portable Beveler . . . 54
BM25 Portable Beveler . . . 56
ABM1218 FR Double-Sided Plate/Pipe Beveling Machine . . . 58
ABM 30 Plate Beveler . . . 60
ABM50 Auto-Feed Double-Sided Beveler . . . 62
SBM500 Stationary Beveling Machine . . . 66
PB5-P / PB5-E Pipe Beveling Machine . . . 68
PB10 / PBE10 Pipe Beveling Machine . . . 72
MPB32Pro / APB32Pro Pipe Beveling Systems . . . 76
PBM1000 Pipe Beveling System . . . 78

LIFTING MAGNETS . . . 80

WELDING/CUTTING AUTOMATION
Torch Runner Track Cutting Machine . . . 83
Eco Runner Portable Fillet Welding Carriage . . . 87
Li'l Runner Automatic Fillet Welding Carriage . . . 89
Arc Runner Programmable Welding Carriage . . . 93
Rail Runner LT . . . 97
Rail Runner Track Welding Carriage . . . 100
Rail Runner GEN III Modular Welding/Cutting Carriage . . . 102
Rail Options for Rail Runner Family of Carriages . . . 104
Welding Oscillator . . . 106
Shape Runner 3200 HD CNC Cutting System . . . 108
MIG Wire Feeder Booms . . . 110

PORTABLE DRILLING MACHINE FROM STEELMAX®

D1 PORTABLE MAGNETIC DRILL

ULTRA COMPACT DRILL COMBINES PORTABILITY AND PERFORMANCE

The D1 is an ultra-compact magnetic drilling machine with maximum capacity of 1-7/16" (36 mm) diameter in 2" (51 mm) thick material. The unit's ultra-light weight of 22 lbs. (10 kg) is the lowest in its class. The maintenance-free rail guide system minimizes run-out, maintains accuracy and reduces cutter breakage.

The D1 is equipped with an electromagnetic Energy Saving Base (ESB) which uses only 50% of the power when the motor is not under load, dramatically increasing the operating life of the electromagnet, and a Magnetic Field Shape Control (MFSC) system which provides maximum holding power on thin material (1/4" minimum) . Safe Magnet™ circuitry assures adequate adhesive force for safe operation.

FEATURES

- 1-7/16" (36 mm) diameter x 2" (51 mm) depth of cut
- Compact and light weight: 14-3/4" working height and only 22 pounds
- Adjustable chip guard included
- Through spindle coolant system with removable coolant bottle
- Maintenance free rail guide system for long life, minimal run-out and extreme accuracy
- Safe Magnet™ circuitry recognizes magnetic holding power
- Automatic slug ejection system
- Magnet uses only 50% power when motor is not under load
- Designed for easy field service and repair

Max Hole Size:
1-7/16" (36 mm)

Depth of cut:
2" (51 mm)

Stroke:
2-3/4" (70 mm)

Weight:
22 lbs. (10kg)

Minimum work piece thickness: 1/4" (6mm)

Steelmax®
The tools of innovation.

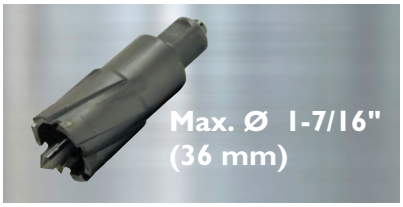

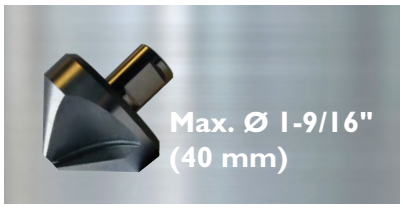

Standard shipping set:

- Drilling machine
- Plastic carrying case
- Adjustable chip guard included
- Through spindle coolant system with removable coolant bottle
- Safety strap
- Set of tools
- Standard shipping weight – 36 lbs (16.7 kg)

D1 Technical Specifications		
Tool holder	3/4" (19 mm) Weldon	
Max Hole Capacity-Annular Cutter	max 1-7/16" (36 mm)	
Countersinking Ø	1-9/16" max (40 mm)	
Stroke	2 -3/4" (70 mm)	
Max depth of cut	2" (51 mm)	
Voltage	115V/60Hz or 230V/50Hz	
Power consumption [W]	1000	
Motor power	920 W 1.2 HP	
Spindle speed (under load)	350 rpm	
Overload protection	yes – 115V/60Hz yes – 230V/50Hz	
MPAC (Magnetic Power Adhesion Control)	yes	
MFSC (Magnetic Field Shape Control)	yes	
ESB (Energy Saving Base)	yes	
Magnet – on 1" (25 mm) plate	Dead lift	Drill point breakaway
	2135 lbs (968 kg)	859 lbs (389 kg)
Magnet base dimensions	3-1/8 x 6-5/16 x 1-7/16" 80 x 160 x 36.5 mm	
Minimum workpiece thickness	1/4" (6 mm)	
Weight	22 lbs (10 kg)	
Part number	**SM-D1** (115V/60Hz) **SM-D1-230** (230V/50Hz)	

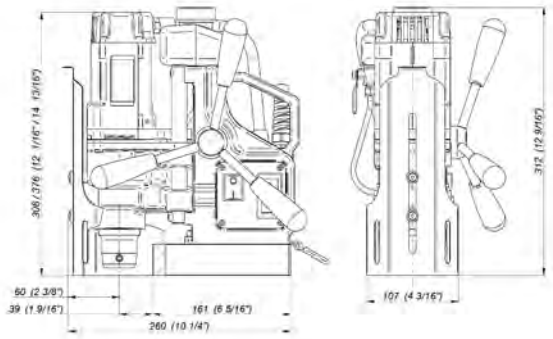

Steelmax®
The tools of innovation.

All information is subject to change without notice.
©2019 STEELMAX

D1 AUTO

ADVANCED SEMI-AUTOMATIC DRILLING MACHINE

The D1 Auto from Steelmax is an advanced semi-automatic drilling machine that is the ideal solution for efficiently drilling large numbers of holes in plates, girders, and other steel fabrication applications. With a maximum 1-7/16" diameter and 2" depth of cut, the D1 Auto covers a wide range of drilling needs in a compact, lightweight machine.

FEATURES:

- 1-7/16" (36 mm) diameter x 2" (51 mm) depth of cut
- Maintenance free railguide system for long life, minimal run-out and extreme accuracy
- Optimal speed and torque produces industry leading cycle times with TCT and HSS cutters
- Safe magnet control systems for excellent performance and operator safety
- Adjustable hip guard included
- Through spindle coolant system with removable coolant bottle
- Integrated cutter guard and large coolant tank

Max Hole Size:
1-7/16" (36 mm)

Depth of cut:
2" (51 mm)

Stroke:
2-3/4" (70 mm)

Weight:
30 lbs. (13.5kg)

Minimum work piece thickness: 1/4" (6mm)

Steelmax®
The tools of innovation.

EXCELLENT PERFORMANCE & PRODUCTIVITY

- Max drilling capacity of 1-7/16" (36 mm) diameter with 2" (51 mm) depth of cut
- Auto-feed mechanism is activated by pushing the handles in.
- Feed control system reduces idle run time and enables smooth start of cutting
- Dynamic control systems adjust the feed speed proportionally to the cutting load maximizing cutting performance with both TCT and HSS cutters
- Auto-feed control stops the machine when drilling is complete

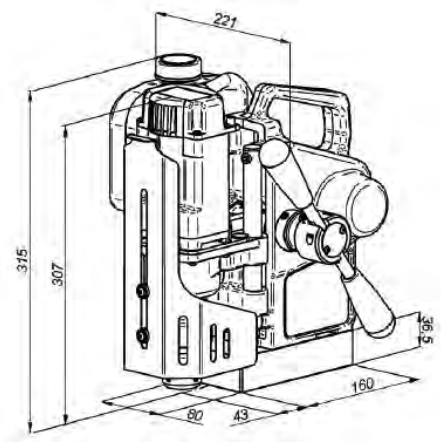

SAFETY

- Overload control stops both cutting and feeding motors immediately
- Magnetic Power Adhesion Control (MPAC) prevents drilling when the electromagnetic holding force is not sufficient. This protects both the machine and the operator from work in unsafe conditions

USER-FRIENDLY

- Ultra light weight - only 30 lbs.
- Large coolant tank
- Uses standard 3/4" Weldon shank cutters
- Maintenance free rail guide system for long life, minimal run out and extreme accuracy

D1 AUTO Technical Specifications	
Voltage	1~ 110–120 V, 50–60 Hz, 1~ 220–240 V, 50–60 Hz
Total power	1000 W
Motor power	920 W
Cutter holder	3/4" Weldon (19 mm)
Max Hole Capacity-Annular Cutter	1-7/16" (36 mm)
Max depth of cut	2" (51 mm)
Electromagnetic base holding force (surface with the thickness of 1" (25 mm) and roughness R_a = 1.25)	2,135.68 lbs 9500 N
Electromagnetic base dimensions	3-1/8"x 6-5/16"x 1-7/16" (80 mm x 160 mm x 36.5 mm)
Stroke	2-3/4" (70 mm)
Spindle speed under load	350 rpm
Spindle speed without load	580 rpm
Minimum work piece thickness	1/4" (6 mm)
Weight	30 lbs (13.5 kg)

Standard shipping set:

- Drilling Machine
- Metal case
- Cooling system bottle
- Chip guard
- Safety strap
- Set of Tools
- Operator's Manual

All information is subject to change without notice.

©2019 STEELMAX

D1 Low Profile

LOW PROFILE ELECTRIC DRILL FOR RESTRICTED SPACE

The D1 Low Profile is an ultra-low-profile mag drill, that fits in the tightest of work spaces. It is a perfect solution for any applications in confined spaces, where typical mag drills are too large. A powerful motor and strong, electromagnetic base enable drilling of holes up to 1-7/16" (36 mm) diameter to a depth of up to 1-3/16" (30 mm).

The D1 Low Profile Mag Drill accepts both TCT and HSS cutters as well as twist drill bits with a standard 3/4" Weldon shank.

FEATURES

- **Ultra low profile mag drill – only 7" tall – with electromagnetic base**
- **Light weight – only 21 lbs (9.5 kg)**
- **1-7/16" (36 mm) diameter x 1-3/16" (30 mm) depth of cut maximums with annular cutters**
- **Accepts Weldon Shank twist drill bits up to 3/4" diameter**
- **Over 1-1/2" stroke (39 mm)**
- **Integrated swarf guard**
- **Convenient lifting handle for easy transportation**

STANDARD SET INCLUDES:

- **Drilling machine**
- **Plastic case**
- **Ratchet handle**
- **Set of tools**
- **Safety strap**
- **Chip guard included**
- **Operator's Manual**

The D1 Low Profile fits in the tightest spots

Max Hole Size: max 1-7/16" (36 mm)

Twist drill: max 1/2" (12 mm) with Weldon Shank 3/4" (19mm)

Depth of cut: up to 1-3/16" (30 mm)

Stroke: 1-1/2" (39 mm)

Speed: 370 rpm

Motor Power: 920 W

Weight: 21 lbs (9.5 kg)

Steelmax®

The tools of innovation.

D1 Low Profile Technical Specifications	
Voltage	115V or 230V 50-60Hz
Motor Power	920W
Power Consumption	1000W
Motor Speed (Under Load)	350 RPM
Tool Holder	3/4" Weldon Shank
Minimum Material Thickness	1/4" (6 mm)
Maximum Hole Size - Annular Cutter	1-7/16" (36 mm)
Maximum Hole Size - Twist Bit	1/2" (12 mm)
Maximum Countersink	1-9/16" (40 mm)
Stroke	1-1/2" (39 mm)
Maximum Depth of Cut	1-3/16" (30 mm) with TCT Cutters 13/16" (20 mm) with HSS Cutters*
Magnetic Clamping Force	2,000 lbs (8900 N)
Magnetic Base Dimensions	**3-1/8"** x 7-1/16 **x** 1-7/16" (90 x 180 x 38.5)
Machine Height	7" (175 mm)
Machine Weight	21 lbs (9.5 Kg)
Part Number	115V: **SM-D1 LP** 230V: **SM-D1 LP-230**

** Up to 1" (25 mm) when used with an optional long quill assembly (SM-ZSP-0521-04-00-00-0)*

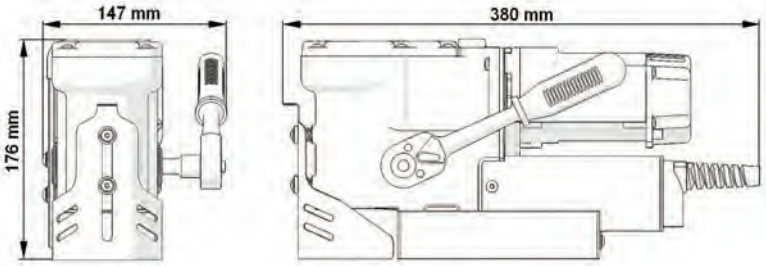

OPTIONAL ACCESSORIES:

- SM-ZSP-0521-04-00-00-0
  Long quill assembly
- SM-PJM-000003
  Coolant bottle with nozzle

Compact design for height restricted areas. Detachable feed lever can be fixed from either side

Max milling capacity up to 1-3/8" (36 mm)

Easily work out of position

Lifting handle for easy transportation

Handy plastic case

Steelmax®
The tools of innovation.

All information is subject to change without notice.
©2019 STEELMAX

CORDLESS MAGNETIC DRILLING MACHINE

D1 CORDLESS

BATTERY OPERATED, COMPACT, MAGNETIC DRILL

The Steelmax D1 CDL is a battery powered, compact magnetic drilling machine designed to drill holes with a diameter of 1-7/16" (36 mm) using annular cutters. The D1 CDL is also capable of drilling holes with a diameter of 1/2" (12 mm) with a twist drill bits and has a 2 " (50 mm) maximum depth of cut. This magnetic drill has a maintenance free guide rail system that minimizes run-out, maintains accuracy, and reduces cutter breakage. This innovative magnetic drill additionally features an LED monitoring system that produces signals in green and red to communicate the current condition of the drill and give safety information to the operator.

FEATURES

- Overload protection
- Tilt Sensor - stops motor if the machine breaks away from the surface during operation
- Maintenance free rail guide system for long life, minimal run-out and extreme accuracy
- LED monitoring system
- Energy Saving Base (ESB) uses only 50% of power when motor is not running
- Compact & Lightweight only 25.5 lbs
- Through spindle coolant system with removable coolant bottle

Battery Pack Control System

Battery Charger

Charging time
~ 30 min (4.0 Ah)
~ 41 min (5.5 Ah)
~ 74 min (10.0 Ah)

Battery 4.0 Ah

Battery 5.5 Ah

Battery 10.0 Ah

Max Hole Size:
1-7/16" (36 mm)

Depth of cut:
2" (51 mm)

Stroke:
2-3/4" (70 mm)

Weight:
25.5 lbs. (13.5kg)

Minimum work piece thickness: 1/4" (6mm)

Steelmax
The tools of innovation.

CORDLESS MAGNETIC DRILL FROM STEELMAX®

D1 CDL Magnetic Drill Technical Specifications	
Motor Speed (under load)	260 rpm
Power	450 W
Voltage	18 V DC
Max Hole Capacity - Annular Cutter	1/2" (12mm)
Annular Cutter Capacity (TCT/HSS)	1-7/16" (36 mm)
Magnetic Base Dimensions	3-1/8 × 6-1/3 × 1-1/2 (") 80 × 160 × 38 (mm)
Stroke	2-3/4" (70 mm)
Max Depth of Cut	2" (50 mm)
Magnetic clamping force (surface with the thickness of 1 " (25 mm) and roughness Ra = 1.25)	1909 lbs 8500 N
Min. work piece thickness	1/4" (6 mm)
Weight (with 5.5 Ah Battery)	25.5 lbs (11.5 kg)
Tool Holder	3/4" (19 mm) Weldon
Part Number	SM-D1-CDL

DIMENSIONS

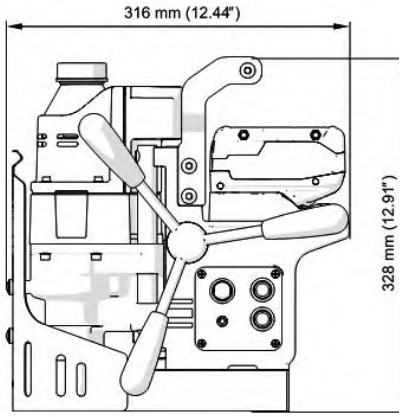

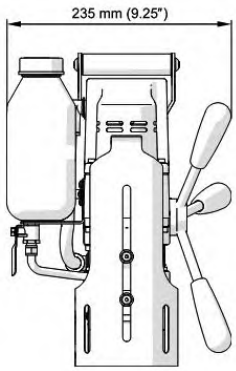

Ships with:

- Cordless drilling machine
- Plastic case
- (2) Batteries 5.5 Ah
- Battery Charger
- Safety Strap
- Coolant Bottle
- Set of Tools

Optional Accessories	
Part Number	Description
SM-LDW-0738-24-00-30-0	Replacement Battery Charger
SM-AKM-0738-10-00-01-0	4.0 Ah CAS Battery
SM-AKM-0738-10-00-03-0	5.5 Ah CAS Battery
SM-AKM-0738-10-00-02-0	10.0 Ah CAS Battery

Ideally suited for out of position work and applications in the field where power is limited

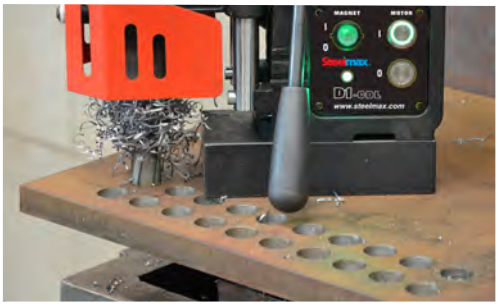

Capable of 20 holes of 7/8" (22mm) in 3/4" (20mm) thick plate when using 10.0Ah Battery pack

Ergonomic Carry Handle for Maximal Portability to the Workpiece

©2022 STEELMAX
ALL INFORMATION IS SUBJECT TO CHANGE WITHOUT NOTICE.

D1 MAG DRILLS FOR SPECIAL APPLICATIONS

D1-SM Swivel Magnet

The swivel base magnetic drill has the ability to operate on convex (min. diameter 12”) and concave surfaces (min diameter 40”). This drill can be used for drilling into pipes, tubes and vessels. It can also be used for creating nozzle openings. Four individual swivel magnets adjust to the surface, allowing the machine to work on uneven work areas. Every magnet is equipped with variable holding force features allowing easy machine positioning while the magnets are partially engaged. The magnets work without electricity making a great safety solution for your drilling needs.

D1-PM Permanent Mag

Drill out of position without the worry of power loss with the D1-PM with Permanent Magnet. The D1-PM’s neodymium rare earth magnets clamp to ferrous surfaces without the need for external electric power offering a safety solution few mag drills on the market can match. The switchable permanent magnet allows for partial engagement making placement over the hole location easy and precise.

D1-TS for Thin Steel

Another innovative D1 variant, the D1-TS for Thin Steel features an innovative magnet design which allows for optimal magnetic field distribution on very thin steel plates with comparable holding force to drills with standard magnets. This allows the drill to safely work on material down to 1/8” (3mm) where most other drills would be deemed unsafe or not work at all.

Technical Specifications			
Model Number	D1-SM	D1-PM	D1-TS
Motor Speed (under load)	350 rpm	350 rpm	350 rpm
Motor Power	920W	920W	920W
Voltage	115V 60Hz 230V 50Hz	115V 60Hz 230V 50Hz	115V 60Hz 230V 50Hz
Power Consumption	1000W	1000W	1000W
Overload Protection	Yes	Yes	Yes
Max Hole Capacity - Annular Cutter	1-7/16" (36 mm)	1-7/16" (36 mm)	1-7/16" (36 mm)
Max Countersinking Cap.	1-9/16" (40 mm)	1-9/16" (40 mm)	1-9/16" (40 mm)
Stroke	2-3/4" (70 mm)	2-3/4" (70 mm)	2-3/4" (70 mm)
Max Depth of Cut	1-3/8" (35 mm)	1-3/4" (45 mm)	2" (51 mm)
Magnetic Holding Force	1349 lbs (6000 N)	1349 lbs (6000 N)	2024 lbs (9000 N)
Magnetic Base Dimensions	9-1/2" x 8-9/16" x 3-3/4" 243mm x 218 mm x 96 mm	3-9/16" x 9-1/3" x 3-7/8" 98 mm x 237 mm x 100 mm	4" x 7-7/8" x 1-1/2" 100 mm x 200 mm x 38 mm
Minimum Workpiece Thickness	1/4" (5 mm)	1/4" (5 mm)	1/8" (3 mm)
Part Number	SM-D1-SM	SM-D1-PM	SM-D1-TS

D1 PRO X PORTABLE MAGNETIC DRILL

HIGH PRODUCTION, LIGHTWEIGHT MAGNETIC DRILL

The Steelmax D1 PRO X is an extremely durable, rigorously constructed drilling machine that is purposely designed for longevity. The 440 RPM motor (under load) makes it optimal to use with HSS and TCT annular cutters. Lightweight, compact and portable, this magnetic drill features a powerful 1100-watt motor capable of drilling with annular cutters up to 1-9/16" (40 mm) diameter holes through 2" (50 mm) thick material. The optional drill chuck can be used with solid, twist drills up to 5/8" (16 mm) diameter and the large stroke enables easy use of longer tools.

FEATURES

- Up to 1-9/16” diameter and 2” depth of cut
- 6” Stroke
- Magnetic Power Adhesion Control (MPAC)
- Magnetic Field Shape Control (MFSC)
- Energy Saving Base (ESB)
- Chip guard included
- Through spindle coolant system with removable coolant bottle

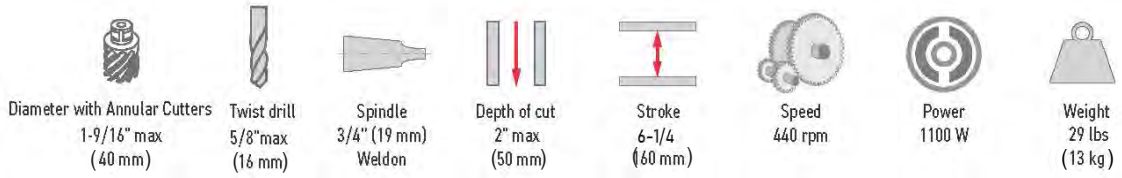

Steelmax®
The tools of innovation.

D1 Pro X Technical Specifications	
Motor Speeds (under load)	440 rpm
Power	1100 W
Voltage	1 ~ 110-120 V, 50-60 Hz 1 ~ 220-240 V, 50-60 Hz
Max Drilling Capacity	5/8" (16 mm)
Max Hole Capacity-Annular Cutter	1-9/16" (40 mm)
Magnetic Base Dimensions	3-3/8 × 6-1/2 × 1-1/2 (") 84 × 168 × 41.5 (mm)
Stroke	6-1/4" (160 mm)
Max Depth of Cut	2" (50 mm)
Min. Work Piece Thickness	3/8"
Tool Holder	3/4" (19 mm) Weldon
Part Number	SM-D1-Pro-X SM-D1-Pro-X-230
Weight	29 lbs (13 kg)

Basic set:

- Drilling machine
- Plastic case
- 3/4" (19 mm) Weldon Arbor
  Swarf shield/Cutter guard with guideway
- Coolant bottle assembly
- Set of tools
- Safety strap

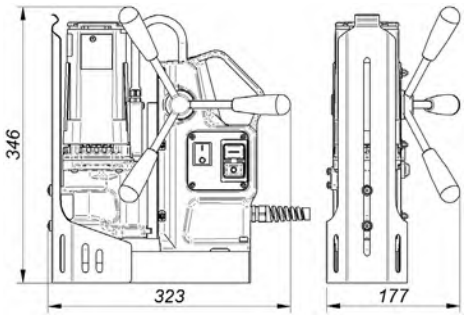

Optional Accessories:

SM-DC-PRO40-WSA*	Weldon Shank 3/4" Adaptor - 20 UNF
SM-DC-PRO40*	Drilling Chuck 16-1/2" - 20 UNF

*Items necessary for use with twist drill bits.

Steelmax®
The tools of innovation.

ALL INFORMATION IS SUBJECT TO CHANGE WITHOUT NOTICE.

©2022 STEELMAX

D-250x PORTABLE MAGNETIC DRILLING MACHINE

POWERFUL ANNULAR CUTTER DRILLING MACHINE

The D-250-X magnetic drill has a powerful 1600w motor which enables a cutting capacity up to 2-3/8" and a depth of cut up to 3". Newly designed motor housing and magnet make this large capacity drill lighter then other competitive drills in the market. The maintenance free guide rail system helps reduce cutter breakage and gives optimal cutter life.

Optimized drilling speeds for both HSS and TCT annular cutters.

FEATURES

- 1600 W powerful motor with heavy duty 2-speed gearbox
- Maintenance free rail guide system
- Suitable for use with TCT or HSS cutters
- Rigid design extends tool life
- Drilling with twist drills featuring Weldon shank
- Innovative smart magnet with weight reduction
- Chip guard included
- Through spindle coolant system with removable coolant bottle

Dimensions

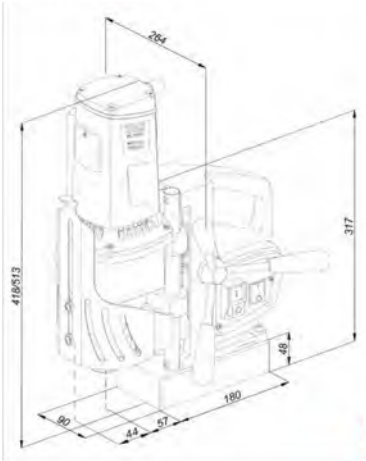

Max Hole Size:
2-3/8" (60 mm)

Depth of cut:
3" (75 mm)

Stroke:
3-3/4" (95 mm)

Weight:
37 lbs. (16.8 kg)

Minimum work piece thickness: 5/16"(8mm)

Steelmax®
The tools of innovation.

Standard shipping set:

- Magnetic base drilling machine
- Plastic case
- Coolant bottle assembly
- Safety strap
- Set of tools

D 250-X Technical Specifications	
Motor Speeds (under load)	160 rpm (gear1) 390 rpm (gear 2)
Power	1600 W
Weight	37 lbs (17 kg)
Max Hole Size- Annular Cutter	2-3/8" (65 mm)
Stroke	3-3/4" (95 mm)
Max Depth of Cut	3" (75 mm)
Voltage	115V, 50-60Hz 230 V, 50-60 Hz
Magnetic clamping force (surface with thickness of 25 mm and roughness Ra=1.25	2474 ft lbs. (11000 N)
Magnet Base Dimensions	3-9/16" x 7" x 1-7/8" 90 mm x 180 mmx 48 mm
Min. Workplace Thickness	5/16" (8 mm)
Tool Holder	3/4" (19 mm) Weldon
Part Number 115V, 50-60 Hz	SM-D-250X
Part Number 230V, 50-60 Hz	SM-D-250X-230

©2020 STEELMAX

D-200-XT UNIVERSAL TAPPING & DRILLING MACHINE

PURPOSE, DESIGNED REVERSIBLE PRODUCTION MAGNETIC DRILL

The D-200-XT drilling machine is suitable for hole cutting and tapping applications.. Powerful 1600 W variable speed motor enables annular cutter capacity up to 2" (50 mm) and drilling capacity up to 7/8" (23 mm). Forward & reverse functions allow tapping up to 3/4" with Steelmax's new tapping chuck and collet system. Two speed gearbox with continuous speed adjustment allows to set the optimal speed depending on diameter, steel grade or tool quality. Intelligent speed control system maintains constant motor speed regardless of changing loads. Innovative 360-degree LED indicator facilitates proper machine operation and increases work safety.

FEATURES

- 1600 W powerful motor with heavy duty 2-speed gearbox
- Intelligent speed control system maintains stable speed regardless of load changes
- Tapping of through and blind holes
- Suitable for use with TCT or HSS cutters and twist drill bits
- Electronic clutch and speed control
- Overload & Overheat protection
- Rigid design extends tool life
- Tilt sensor stops motor in case of machine break away
- 360- degree visual monitoring system indicatescurrent condition of the drill and gives safety and diagnostic information e.g. worn brushes
- Innovative smart magnet with reduced weight
- Intuitive control panel at top of the drill
- Through spindle coolant system with removable coolant bottle

Max Hole Size:
2" (50 mm)

Depth of cut:
3" (75 mm)

Stroke:
7-1/2" (190 mm)

Weight:
37 lbs. (16.8 kg)

Minimum work piece thickness: 5/16"(8mm)

Standard shipping set:

- Drilling machine
- Plastic case
- 3/4" (19 mm) Weldon Tool Holder
- Chip guard
- Coolant bottle assembly
- Safety strap
- Set of tools
- Standard shipping weight – 56 lbs 5 oz (26.1 kg)

D 200-XT Technical Specifications	
Motor Speeds (under load)	160-250 rpm (gear1) 390-580 rpm (gear 2)
Power	1600 W
Weight	37 lbs (17 kg)
Max Hole Size-Annular Cutter	2" (50mm)
Max Drilling Capacity	7/ 8" (23 mm)
Max Depth of Cut	3" (75 mm)
Max Tap Size	M20 (3/ 4")
Stroke	7-1/2" (190 mm)
Voltage	115 V, 50-60Hz 230V, 50-60 Hz
Magnetic clamping force (surface with thickness of 25 mm and roughness Ra=1.25	2474 ft lbs (11000 N)
Magnet Base Dimensions	3-9/ 16" x 7" x 1-7/ 8" 90 mm x 180 mm x 48 mm
Min. Workplace Thickness	5/ 16" (8 mm)
Spindle	MT2
Tool Holder	3/ 4" (19 mm) Weldon
Part Number 115V, 50-60 Hz	SM-D-200-XT
Part Number 230V, 50-60 Hz	SM-D-200-XT-230

Intuitive control panel at top of the drill

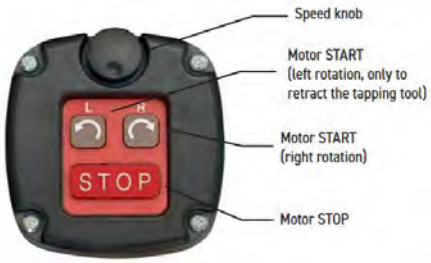

360-degree Visual Monitoring System – VMS

Drill Operational Status		Ready To Operate (Solid Green)
		Normal Operation (Solid White)
		Motor Overheat (Solid Red)
		Emergency Stop/Overload (Solid Blue)
		Emergency Stop/Low Adhesion (Solid Violet)
Safety Information		Inadequate Adhesion (Flashing Green)
		Near Overload (Flashing Blue
Diagnostics		Emergency Stop/ Voltage Drop (Red Flashes to Blue)
		Emergency Stop/ Worn Brushes (Red changes to Green)

Through and Blind hole tapping

Counterclockwise (CCW) rotation
User-friendly control of tapping tool release

Steelmax®
The tools of innovation.

D-300-XT TAPPING & DRILLING MACHINE

VARIABLE SPEED, REVERSIBLE PRODUCTION MAGNETIC DRILL

The D-300-XT is a variable speed drilling machine designed to drill holes with diameters of up to 2-3/4" (70 mm) by using annular cutters. The machine can also drill holes with diameters of up to 1"(25 mm) by using twist drill bits. The D-300-XT can change the direction of rotation. This allows tapping of pre-drilled holes by using a tap chuck. The electromagnetic base clamps the machine to ferromagnetic surfaces, making sure that the operator is safe and the machine works correctly. A safety strap protects the machine from falling in case of a clamping loss. Accessories allow you to drill in pipes and cut threads.

FEATURES

- **360- degree visual monitoring system indicates current condition of the drill and gives safety and diagnostic information, e.g. worn brushes**
- **1600 W motor**
- **Overload & Overheat protection**
- **Tapping of through and blind holes with intelligent load control**
- **Drilling with both TCT & HSS cutters and twist drill bits**
- **Full electronic motor control**
- **Electronic clutch (faster than mechanical)**
- **Rigid design extends tool life**
- **Innovative smart magnet with reduced weight**
- **Intuitive control panel at top of the drill**
- **Through spindle coolant system with removable coolant bottle**

Max Hole Size:
2-3/4" (70 mm)

Depth of cut:
3" (75 mm)

Stroke:
7-1/2" (190 mm)

Weight:
40 lbs. (18.15 kg)

Minimum work piece thickness: 5/16"(8mm)

Standard shipping set

- Drilling machine
- Plastic case
- MT3 Arbor with 3/4" (19 mm) Weldon tool holder
- Chip guard
- Coolant bottle assembly
- Safety strap
- Set of tools

D-300-XT Technical Specifications	
Motor Speeds (under load)	120-190 rpm (gear1) 290-450 rpm (gear 2)
Motor Power	1600 W
Weight	40 lbs (18 kg)
Max Hole Capacity-Annular Cutter	2-3/ 4" (70 mm)
Max Drilling Capacity	1" (25 mm)
Max Tap Size	7/ 8" (M20)
Stroke	7-1/2" (190 mm)
Max Depth of Cut	2-15/ 16" (75 mm)
Voltage	115 V, 50-60Hz 230 V, 50-60 Hz
Magnetic clamping force (surface with the thickness of 25 mm and roughness Ra=1.25	2474 ft lbs (11000 N)
Magnet base dimensions	3-3/8 x 7-1/8" x 2-1/8" 92 mm x 180 mm x 54 mm
Min. Workplace Thickness	5/16" (8 mm)
Spindle	MT3
Tool Holder	3/ 4" (19 mm) Weldon
Part Number 115V, 50-60 Hz	SM-D-300XT
Part Number 230V, 50-60 Hz	SM-D-300XT-230

Intuitive control panel at top of the drill

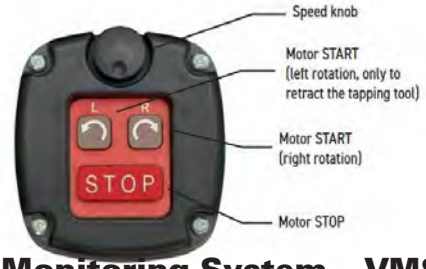

360-degree Visual Monitoring System – VMS

Drill Operational Status		Ready To Operate (Solid Green)
		Normal Operation (Solid White)
		Motor Overheat (Solid Red)
		Emergency Stop/Overload (Solid Blue)
		Emergency Stop/Low Adhesion (Solid Violet)
Safety Information		Inadequate Adhesion (Flashing Green)
		Near Overload (Flashing Blue
Diagnostics		Emergency Stop/ Voltage Drop (Red Flashes to Blue)
		Emergency Stop/ Worn Brushes (Red changes to Green)

Through and Blind hole tapping

Counterclockwise (CCW) rotation
User-friendly control of tapping tool release

Steelmax®
The tools of innovation.

DRILLING & TAPPING MACHINE FROM STEELMAX®

D-400-XT UNIVERSAL TAPPING & DRILLING MACHINE

LARGE DIAMETER, MULTIPURPOSE, VARIABLE SPEED, REVERSIBLE PRODUCTION MAGNETIC DRILL

The D-400-XT drilling machine is suitable for many industrial hole making and tapping applications. Powerful 2300 W, variable speed motor enables cutting capacity up to 5" (130 mm) and drilling capacity up to 1-1/4" (31.75 mm). Forward and reverse functions allow tapping of pre-drilled holes up to 1-1/4" (M30) by using the quick change tapping system from Steelmax.
4-speed gear and continuous speed adjustment help to set the optimal speed depending on size of diameter, material grade and tool in use. Intelligent speed control system maintains the constant speed regardless of the changing load and increases tool life. Innovative 360-degree visual monitoring system facilitates machine operation and increases work safety.

FEATURES

- 360- degree visual monitoring system indicates current condition of the drill and gives safety and diagnostic information, e.g. worn brushes
- Most powerful motor in its class (among MT3 drills)
- Overload & Overheat protection
- 4-Speed gear with continuous speed adjustment
- Intelligent speed control system maintains stable speed regardless of load changes
- Tapping of through and blind holes with intelligent load control
- Drilling with both TCT & HSS cutters and twist drill bits
- Full electronic motor control
- Electronic clutch and speed control
- Rigid design extends tool life
- Tilt sensor (gyroscopic) stops motor in case of machine break away
- Innovative smart magnet with reduced weight
- Intuitive control panel at top of the drill
- Through spindle coolant system with removable coolant bottle

Max Hole Size:
5” (130 mm)

Depth of cut:
4” (100 mm)

Stroke:
9” (225 mm)

Weight:
55 lbs. (25 kg)

Minimum work piece thickness: 3/8” (10mm)

Steelmax®
The tools of innovation.

D-400-XT Technical Specifications	
Motor Speeds (under load)	75-110 rpm (gear1) 135-200 rpm (gear 2) 220-320 rpm (gear 3) 390-570 rpm (gear 4)
Motor Power	2300 W
Weight	55 lbs (25 kg)
Max Hole Capacity-Annular Cutter	5" (130 mm)
Max Drilling Capacity	1-1/4" (31.75 mm)
Max Tap Size	1-1/4" (M30)
Stroke	9" (225 mm)
Max Depth of Cut	4" (100 mm)
Voltage	115 V, 50-60Hz 230 V, 50-60 Hz
Magnetic clamping force (surface with the thickness of 25 mm and roughness Ra=1.25	4045 ft lbs (18000 N)
Magnet base dimensions	4-1/3" x 8-3/4" x 2" 110 mm x 220 mm x 50 mm
Min. Workplace Thickness	3/8" (10 mm)
Spindle	MT3
Tool Holder	3/4" (19 mm) or 1 1/4" (32 mm) Weldon
Part Number 115V, 50-60 Hz	SM-D-400XT
Part Number 230V, 50-60 Hz	SM-D-400XT-230

Standard shipping set:

- Drilling machine
- Metal case
- MT3 Arbor with 3/4" (19 mm) Weldon tool holder
- Integrated coolant system
- Safety strap
- Set of tools

360-degree Visual Monitoring System – VMS

Drill Operational Status		Ready To Operate (Solid Green)
		Normal Operation (Solid White)
		Motor Overheat (Solid Red)
		Emergency Stop/Overload (Solid Blue)
		Emergency Stop/Low Adhesion (Solid Violet)
Safety Information		Inadequate Adhesion (Flashing Green)
		Near Overload (Flashing Blue
Diagnostics		Emergency Stop/ Voltage Drop (Red Flashes to Blue)
		Emergency Stop/ Worn Brushes (Red changes to Green)

Drilling Capacity up to 5" (130 mm)
Max Depth of cut up to 4" (100 mm)

Through and Blind Hole Tapping

Steelmax®
The tools of innovation.

©2020 STEELMAX

DRILLING & TAPPING MACHINE FROM STEELMAX®

D-500-XT HEAVY DUTY TAPPING & DRILLING MACHINE

POWERFUL LARGE DIAMETER,. REVERSIBLE PRODUCTION MAGNETIC DRILL

The D-500-XT drilling machine is suitable for many heavy-duty hole making and tapping applications. Powerful 2300 W variable speed motor enables cutting capacity up to 6" (152 mm) and drilling capacity up to 1-5/8" (42 mm). Forward and reverse functions allow tapping of pre-drilled holes up to 1-5/8" (M42) by using the quick change tapping system by Steelmax. 4-speed gear and continuous speed adjustment help to set the optimal speed depending on diameter, material grade and tool in use. Intelligent speed control system maintains the constant speed regardless of the changing load and increases tool life. Innovative 360-degree visual monitoring system facilitates machine operation and increases work safety.

FEATURES

- 360-degree visual monitoring system indicates current condition of drill and gives safety and diagnostic information, e.g. worn brushes
- Very powerful 2300 W motor
- Overload & Overheat protection
- 4-Speed gear with continuous speed adjustment
- Intelligent speed control system maintains stable speed regardless of load changes
- Tapping of through and blind holes with intelligent load control
- Drilling with both TCT & HSS cutters and twist drill bits
- Full electronic motor control
- Electronic clutch (faster than mechanical)
- Rigid design extends tool life
- Tilt sensor (gyroscopic) stops motor in case of machine break away
- Innovative smart magnet with reduced weight
- Intuitive control panel at top of the drill
- Through spindle coolant system with removable coolant bottle

Max Hole Size:
6" (152 mm)

Weight:
68 lbs. (31 kg)

Depth of cut:
4" (100 mm)

Minimum work piece thickness: 3/8" (10 mm)

Stroke:
10" (260 mm)

Steelmax®
The tools of innovation.

D-500-XT Technical Specifications	
Motor Speeds (under load)	58-85 rpm (gear1) 100-150 rpm (gear 2) 200-300 rpm (gear 3) 350-520 rpm (gear 4)
Motor Power	2300 W
Weight	68 lbs (31 kg)
Max Hole Size-Annular Cutter	6" (152 mm)
Max Drilling Capacity	1-5/ 8" (42 mm)
Max Tap Size	1-5/ 8" (M42)
Stroke	10" (260 mm)
Max Depth of Cut	4" (100 mm)
Voltage	115 V, 50-60Hz 230 V, 50-60 Hz
Magnetic clamping force (surface with the thickness of 25 mm and roughness Ra=1.25	5622 ft. lbs. (25000 N)
Magnet base dimensions	4-1/ 8" x 12-3/ 8" x 2" 105 mm x315 mm x 50 mm
Min. Workplace Thickness	3/ 8" (10 mm)
Spindle	MT4
Tool Holder	3/ 4" (19 mm) or 1 1/ 4" (32 mm) Weldon
Part Number 115V, 50-60 Hz	SM-D-500-XT
Part Number 230V, 50-60 Hz	SM-D-500-XT-230

Standard shipping set:

- Drilling machine
- Metal case
- MT4 Arbor with 3/4" (19 mm) Weldon tool holder
- Coolant bottle assembly
- Safety strap
- Set of tools

360-degree Visual Monitoring System – VMS

Drill Operational Status		Ready To Operate (Solid Green)
		Normal Operation (Solid White)
		Motor Overheat (Solid Red)
		Emergency Stop/Overload (Solid Blue)
		Emergency Stop/Low Adhesion (Solid Violet)
Safety Information		Inadequate Adhesion (Flashing Green)
		Near Overload (Flashing Blue
Diagnostics		Emergency Stop/ Voltage Drop (Red Flashes to Blue)
		Emergency Stop/ Worn Brushes (Red changes to Green)

Drilling Capacity up to 6" (152 mm)
Max Depth of cut up to 4" (100 mm)

Through and Blind Hole Tapping

Steelmax

D1AIR ATEX CERTIFIED PNEUMATIC DRILL

VERY LOW PROFILE DRILL FOR RESTRICTED SPACE

The **D1AIR ATEX** is an extremely small portable pneumatic drilling machine for cutting holes up to 1-7/16″ (36 mm) diameter in hazardous environments and where access to the hole location is restricted. The D1AIR ATEX conforms to the ATEX II 2 G/D c IIC T6/T4 standard for equipment used in hazardous environments.

A combination of pneumatic drive and permanent magnetic base eliminate the need of an electric power supply, thus making this machine an ideal solution in many hazardous environments such as offshore oil platforms, mining applications, shipbuilding and petrochemical industries. The D1AIR ATEX is one of the lowest height magnetic drills currently available on the world market.

FEATURES

- 1-7/16″ (35 mm) diameter x 1″ (25 mm) depth of cut with annular cutters
- 5/8″ (16 mm) diameter with solid twist drill bits
- For use in hazardous environments – fully ATEX compliant
- Low profile for use in height-restricted spaces
- Pneumatic drive and permanent magnetic base

D1AIR ATX Technical Specifications	
Air consumption	50 CFM (1400 l/min)
Air pressure	90 psi (630 kpa)
Motor power	800W 1.1 HP
Tool holder	3/4" (19 mm) Weldon
Max drilling capacity	1/2" – 1-3/8" (12 - 36 mm)
Max depth of cut	1" (25 mm)
Stroke	1-9/16" (39 mm)
Magnet dead lift on 1" (25 mm) plate	1461 lbs (6500 N)
Magnet dimensions: L x W x H	7-1/16" x 3-1/8" x 1-7/16" (180 x 80 x 36.5 mm)
Overall dimensions: L x W x H	18-7/8" x 6-5/8" x 7-1/16" (480 x 168 x 180 mm)
Weight	37 lbs (17 kg)
Part number	**SM-D1AIR ATX**

ATEX CERTIFIED
ATEX
MODEL

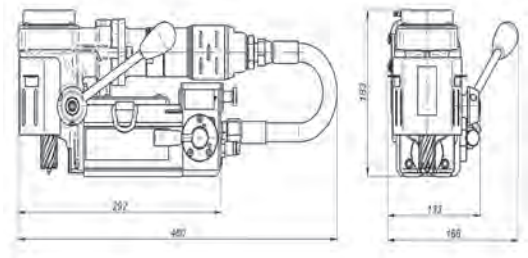

Annular Cutters up to 1-7/16" (35 mm)

Twist drill 5/8" (16 mm)

Depth of cut 1" (25 mm)

Stroke 1-9/16" (39 mm)

Motor Power 800W 1.1HP

Weight 37 lbs (17 kg)

Steelmax®
The tools of innovation.

©2019 STEELMAX

D175 ATEX CERTIFIED PNEUMATIC DRILL

HEAVY-DUTY DRILL FOR HAZARDOUS ENVIRONMENTS

The **D175 ATEX** Pneumatic Drill from Steelmax is a small, portable drilling machine which drills holes up to 1-3/4" (45 mm) in diameter and up to 2" deep. The combination of a pneumatic drive and a permanent magnetic base eliminates the need for an electric power supply making this machine the ideal solution in many hazardous environments – such as oil drilling platforms, petrochemical plants, oil refineries, shipbuilding and the petrochemical industry – where electric appliances are prohibited for safety reasons. The D175 is fully ATEX certified for use in these environments.

FEATURES:

- ATEX certified for use in hazardous environments
- No need for electric power
- Strong permanent magnet base
- Comprehensive safety features
- Protection against motor start-up when magnetic base is not secure
- Two-speed gear box

D175 ATEX
conforms to
ATEX II 2 G/D c IIC T6/T4
Standard for equipment
used in hazardous
environments

ATEX

Annular Cutters	Twist drill	Depth of cut	Stroke	Speed	Motor Power	Weight
up to 1-3/4" (45 mm)	3/4" (20 mm)	2" (51 mm)	6" (150 mm)	190 rpm, 290 rpm	800 W	58.5 lbs (26.5 kg)

Steelmax®
The tools of innovation.

PNEUMATIC DRILLING MACHINE FROM STEELMAX®

D175 ATEX Technical Specifications	
Spindle speed (under load)	190 rpm (gear I); 290 rpm (gear II)
Motor power	800 W
Weight	58.5 lbs (26.5 kg)
Max drilling capacity	1-3/4" (45 mm)
Tool holder	3/4" Weldon Shank
Stroke	6" (150 mm)
Max depth of cut	2" (51 mm)
Air consumption	50 CFM (1400 l/min)
Pressure	87 psi (6 bar)
Spindle	#2 Morse Taper
Minimum workpiece thickness	3/8"' (10 mm)
Overall dimensions LxWxH	16-3/4" x 10-1/2" x 27-3/4" (424 mm x 268 mm x 703 mm)
Required ambient temperature	32–104° F (0–40° C)
Magnetic base holding force	1686 ft lbs (7 500 N)
Magnetic base dimensions	3-1/8" x 3-1/8" x 5-1/3" (80 mm x 80 mm x 143 mm)
Product Code	SM-D175 ATEX

Dimensions

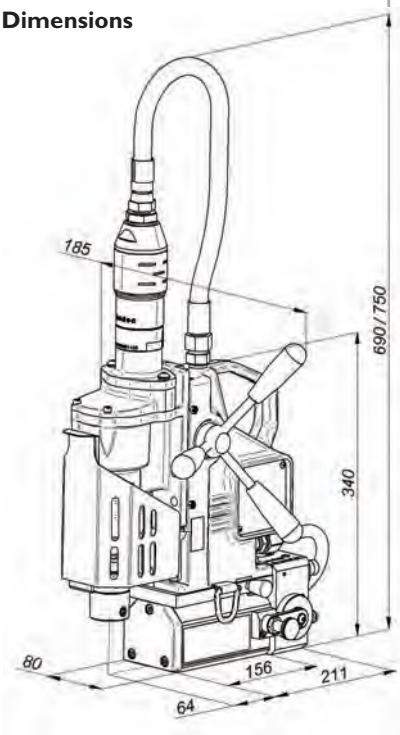

Standard package includes:

- Pneumatic drilling machine
- Metal box
- MT2 arbor for 3/4" weldon shank cutters
- Safety chain
- Cooling system
- Set of tools

Drill chucks, arbor extensions and other accessories are available. See the full line catalog for more information.

Steelmax®
The tools of innovation.

All information is subject to change without notice.

©2019 STEELMAX

MAGNETIC DRILL PIPE ATTACHMENTS

MOUNT DRILLS TO PIPES FOR SAFE OPERATION

Our magnetic drill pipe attachments are designed for mounting Steelmax drills on pipe, tubes, tanks and oval workpieces. These pipe attachments provide a flat, ferrous platform for the drill to adhere to and safely operate; allowing the user to easily drill holes in both ferrous and non-ferrous pipes.

The pivoting feet and tensioning chains make these pipe attachments very versatile and easy to adjust for various diameters. The DMP-250 and DMP-251 will work on pipe from 3" up to 9-1/2" diameter while the DMP-501 will work on 6" up to 19-1/2" diameter pipes.

DMP 0250, 0251

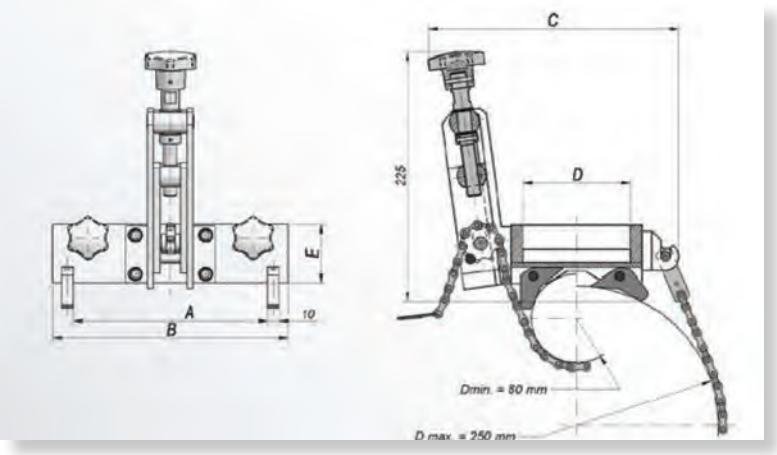

DMP 0501

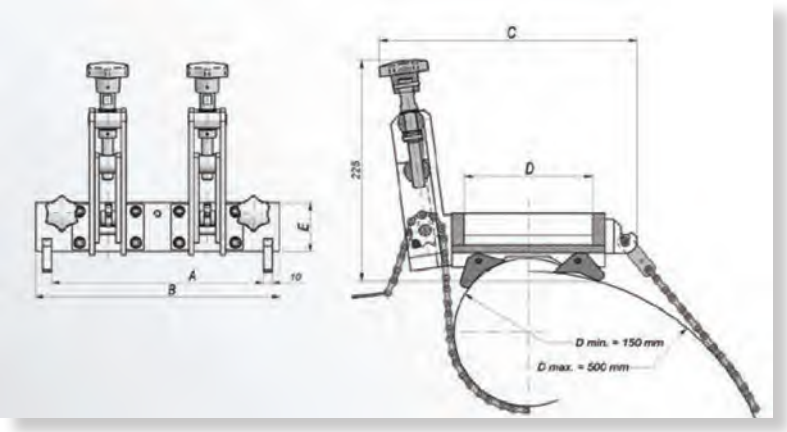

PIPE Attachment	A	B	C	D	E	Suitable for:
DMP 0250	6" (152 mm)	7-3/8" (188 mm)	8-5/16" (211 mm)	3-5/16" (85 mm)	2-1/16" (52.5 mm)	D1, D1 Pro X 3" to 9.5" pipe
DMP 0251	6-3/4" (172 mm)	8-3/16" (208 mm)	8-11/16" (221 mm)	3-3/4" (95 mm)	2-1/16" (52.5 mm)	D200XT, D250X 3" to 9.5" pipe
DMP 0501 -	9-3/16" (234 mm)	10-5/8" (270 mm)	10-1/16" (256 mm)	5-1/8" (130 mm)	2-1/16" (52.5 mm)	D1 Pro X, D1 Auto D200X, D200XT D300XT, D400XT 6" to 19.5" pipe

ALL INFORMATION IS SUBJECT TO CHANGE WITHOUT NOTICE.

Steelmax®
The tools of innovation.

©2020 STEELMAX

STEELMAX® DRILL FEATURES & SPECIFICATIONS

Steelmax
The tools of innovation.

MODEL	D1		D1 Auto		D1 LP	
DRILL OPERATION	MANUAL		SEMI-AUTOMATIC		MANUAL	
SPINDLE	–		–		–	
TOOL HOLDER	3/4" (19 MM) WELDON		3/4" (19 MM) WELDON		3/4" (19 MM) WELDON	
ANNULAR CUTTER (CORE DRILL) Ø	MAX 1-7/16" (36 MM)		MAX 1-7/16" (36 MM)		MAX 1-7/16" (36 MM)	
TWIST DRILL Ø	–		–		–	
COUNTERSINKING Ø	1-9/16" MAX (40 MM)		–		MAX 1-9/16" (40 MM)	
MAX TAP SIZE	–		–		–	
STROKE	2-3/4" (70 MM)		2-3/4" (70 MM)		1-1/2" (39 MM)	
MAX DEPTH OF CUT	2" (51 MM)		2" (51 MM)		1-3/16" (30 MM)	
VOLTAGE	115V/60HZ		115V/60HZ		115 V/60HZ	
INTERNATIONAL VOLTAGE	230V/50HZ		230V/50HZ		230 V/50HZ	
POWER CONSUMPTION	1000 W		1000 W		1000 W	
MOTOR POWER	920 W 1.2 HP		920 W 1.2 HP		920 W 1.2 HP	
SPEED	350 RPM		350 RPM		350 RPM	
OVERLOAD PROTECTION	YES		YES		–	
REVERSING AVAILABLE	NO		NO		NO	
ESSS (ELECTRONIC SPEED STABILIZATION SYSTEM)	–		–		–	
MPAC (MAGNETIC POWER ADHESION CONTROL)	YES		YES		YES	
CONTINUOUS SPEED ADJUSTMENT	–		–		–	
MFSC (MAGNETIC FIELD SHAPE CONTROL)	YES		YES		YES	
MAGNETIC CLAMPING FORCE (25 MM, RA=1.25 MM)	2135 LBS (968 KG)		2135 LBS (968 KG))		2000 LBS (907 KG))	
ESB (ENERGY SAVING BASE)	YES		YES		YES	
MAGNET – ON 1" (25 MM) PLATE	DEAD LIFT	DRILL POINT BREAKAWAY	DEAD LIFT	DRILL POINT BREAKAWAY	DEAD LIFT	DRILL POINT BREAKAWAY
	2135 LBS (968 KG)	859 LBS (389 KG)	2135 LBS (968 KG)	859 LBS (389 KG)	2000 LBS (907 KG)	810 LBS (367 KG)
MAGNET BASE DIMENSIONS	3-1/8" X 6-5/16" X 1-7/16" (80 X 160 X 36.5 MM)		3-1/8" X 6-5/16" X 1-7/16" (80 X 160 X 36.5 MM)		3-9/16" X 7-1/16" X 1-1/2" (90 X 180 X 38.5 MM)	
MINIMUM WORKPIECE THICKNESS	1/4" (6 MM)		1/4" (6 MM)		1/4" (6 MM)	
TAPPING ACCESSORIES AVAILABLE	NO		NO		NO	
TOOL WEIGHT	22 LBS (10 KG)		30 LBS (13.5 KG)		21 LBS (9.5 KG)	
PART NUMBER	**SM-D**1 (115V/60Hz) **SM-D1-230** (230V/50Hz)		**SM-D**1Auto (115V/60Hz) **SM-D**1Auto-**230** (230V/50Hz)		**SM-D1LP** (115V/60Hz) **SM-D1LP-230** (230V/50Hz)	

ALL INFORMATION IS SUBJECT TO CHANGE WITHOUT NOTICE.

STEELMAX® DRILL FEATURES & SPECIFICATIONS

D1 Pro X		D1-TS		D1-SM		D1-PM	
MANUAL		MANUAL		MANUAL		MANUAL	
–		–		–		–	
3/4" (19 MM) WELDON		3/4" (19 MM) WELDON		3/4" (19 MM) WELDON		3/4" (19 MM) WELDON	
MAX 1–9/16" (40 MM)		MAX 1–7/16" (36MM)		MAX 1–7/16" (36MM)		MAX 1–7/16 " (36 MM)	
MAX 5/8" (16 MM)		–		–		–	
MAX 1–9/16" (40 MM)		MAX 1–9/16" (40 MM)		MAX 1–9/16" (40 MM)		MAX 1–9/16" (40 MM)	
–		–		–		–	
6–1/4" (160 MM)		2–3/4" (70 MM)		2–3/4" (70 MM)		2–3/4" (70 MM)	
2" (51 MM)		2" (51 MM)		2" (51 MM)		2" (51 MM)	
115 V/60HZ		115V/60HZ		115V/60HZ		115V/60HZ	
230 V/50HZ		230V/50HZ		230V/50HZ		230V/50HZ	
1140 W		1000 W		1000 W		1000 W	
1100 W 1.4 HP		920 W 1.2 HP		920 W 1.2 HP		920 W 1.2 HP	
440 RPM		350 RPM		350 RPM		350 RPM	
–		YES		YES		YES	
NO		NO		NO		NO	
–		–		–		–	
YES		YES		YES		YES	
–		–		YES		–	
YES		YES		YES		YES	
2200 LBS (998 KG)		2019 LBS (918 KG)		1346 LBS (612 KG)		1346 LBS (612 KG)	
YES		YES		YES		YES	
DEAD LIFT	DRILL POINT BREAKAWAY	DEAD LIFT	DRILL POINT BREAKAWAY	DEAD LIFT	DRILL POINT BREAKAWAY	DEAD LIFT	DRILL POINT BREAKAWAY
2203 LBS (1000 KG)	880 LBS (400 KG)	2135 LBS (968 KG)	859 LBS (389 KG)	2135 LBS (968 KG)	859 LBS (389 KG)	2135 LBS (968 KG)	859 LBS (389 KG)
3–1/3 × 6–5/8 × 1–5/8 (") (84 X 168 X 41.5 MM)		4" X 7–3/4" X 1–1/2" (100 MM X 200 MM X 38 MM)		9–1/2" X 8.–1/2" X 3–3/4 " (243 MM X 218 MM X 96 MM)		3–7/8" X 9–1/3" X 3–7/8" (98 MM X 237 MM X 100 MM)	
3/8" (9 MM)		1/8" (3 MM)		1/4" (5 MM)		1/4" (5 MM)	
NO		NO		NO		NO	
29 LBS (13 KG)		24 LBS (11 KG)		31 LBS (14 KG)		29 LBS (13 KG)	
SM-D1PRO-X (115V/60HZ) **SM-D1PRO-X 230** (230V/50Hz)		**SM-D1-TS** (115V/60Hz) **SM-D1-TS-230** (230V/50Hz)		**SM-D1-SM** (115 V/60Hz) **SM-D1-SM-230** (230 V/50Hz)		**SM-D1-PM** (115V/60Hz) **SM-D1-PM-230** (230V/50Hz)	

©2018 STEELMAX

STEELMAX® DRILL FEATURES & SPECIFICATIONS

Steelmax
The tools of innovation.

MODEL	D-250X		D200XT		D300XT		D1 CDL
DRILL OPERATION	MANUAL		MANUAL		MANUAL		MANUAL
SPINDLE	–		MT2		MT3		
TOOL HOLDER	3/4" (19 MM) WELDON		3/4" (19 MM) WELDON		3/4" (19 MM) WELDON		3/4" WELDON
ANNULAR CUTTER (CORE DRILL) Ø	MAX 2–3/8" (65 MM)		MAX 2" (50 MM)		MAX 2–3/4" (70 MM)		1–7/16" (36 MM)
TWIST DRILL Ø			7/8" (23 MM)		1" (25 MM)		1/2" (12 MM)
COUNTERSINKING Ø	–		–				
MAX TAP SIZE	–		3/4" (M20)		7/8" (M20)		
STROKE	3–3/4" (95 MM)		7–1/2" (190 MM)		7–1/2" (190 MM)		2–3/4" (70 MM)
MAX DEPTH OF CUT	3" (75 MM)		3" (75 MM)		2–15/16" (70 MM)		2" (50 MM)
VOLTAGE	115V/50–60HZ		115V/50–60HZ		1~ 110–120 V, 50–60 HZ		18 V DC
INTERNATIONAL VOLTAGE	230V/50–60HZ		230V/50–60HZ		1~ 220–240 V, 50–60 HZ		
POWER CONSUMPTION							
MOTOR POWER	1600 W		1600 W		1600 W		450 W
SPEED	160 / 390 RPM		160/250 AND 390/580 RPM		120/190 AND 290/450 RPM		260 RPM
OVERLOAD PROTECTION	YES		YES		YES		YES
REVERSING AVAILABLE	NO		YES		YES		NO
ESSS (ELECTRONIC SPEED STABILIZATION SYSTEM	–		YES		YES		–
MPAC (MAGNETIC POWER ADHESION CONTROL)	YES		YES		YES		
CONTINUOUS SPEED ADJUSTMENT	–		YES –				
MFSC (MAGNETIC FIELD SHAPE CONTROL)	YES		YES		YES		
MAGNETIC CLAMPING FORCE (25 MM, RA=1.25 MM)	2474 FT LBS (1122 KG)		2474 FT LBS (1122 KG)		2474 FT LBS (1122 KG)		859 LBS
ESB (ENERGY SAVING BASE)	YES		YES		YES		YES
MAGNET – ON 1" (25 MM) PLATE	DEAD LIFT	DRILL POINT BREAKAWAY	DEAD LIFT	DRILL POINT BREAKAWAY	DEAD LIFT	DRILL POINT BREAKAWAY	
	2135 LBS (968 KG)	859 LBS (389 KG)	2135 LBS (968 KG)	859 LBS (389 KG)	2000 LBS (907 KG)	810 LBS (367 KG)	
MAGNET BASE DIMENSIONS	3–9/16" X 7" X 1–7/8" (90 X 180 X 48 MM)		3–9/16" X 7" X 1–7/8" (90 X 180 X 48 MM		3–5/8" X 7" X 2–1/8" (92 X 180 X 54 MM)		3 × 6–3/8" × 1–1/2" 80 × 160 × 38 (MM)
MINIMUM WORKPIECE THICKNESS	5/16" (8 MM)		5/16" (8 MM)		5/16" (8 MM)		1/4" (6 MM)
TAPPING ACCESSORIES AVAILABLE	NO		YES		YES		NO
TOOL WEIGHT	37 LBS (17 KG)		37 LBS (17 KG)		40 LBS (18 KG)		25.35 LBS (11.5 KG)
PART NUMBER	**SM-D-250-X** (115V/60Hz) **SM-D-250-X-230**) (230V/50Hz)		**SM-D-200XT** (115V/60Hz) **SM-D-200XT-230** (230V/50Hz)		**SM-D-300XT** (115V/60Hz) **SM-D-300XT-230** (230V/50Hz)		**SM-D1-CDL**

ALL INFORMATION IS SUBJECT TO CHANGE WITHOUT NOTICE.

STEELMAX® DRILL FEATURES & SPECIFICATIONS

D400XT		D500XT		D1 ATEX		D175 ATEX	
MANUAL		MANUAL		MANUAL		MANUAL	
MT3		MT4				MT2	
3/4" (19 MM) OR 1-1/4" (32 MM) WELDON		3/4" (19 MM) OR 1-1/4" (32MM) WELDON		3/4" (19 MM) WELDON		3/4" (19 MM) WELDON	
MAX 5" (130 MM)		MAX 6" (152 MM)		MAX 1/2"-1-3/8"" (12-36 MM)		MAX 1-3/4" (45 MM)	
MAX 1-1/4" (31.75MM)		MAX 1-7/8" (47MM)		MAX 5/8" (16 MM)		MAX 13/16" (20 MM)	
				MAX 1-3/8" (35 MM)		-	
1-1/4" (M30)		1-5/8" (M42)		-		-	
9" (225 MM)		10" (260 MM)		1-9/16" (39 MM)		6" (150 MM)	
4" (100 MM)		4" (100 MM)		1" (25 MM)		2" (50 MM)	
115 V/50-60HZ		115V/50-60HZ		115V/50-60HZ		115V/50-60HZ	
230 V/50-60HZ		230V/50-60HZ		230V/50-60HZ		230V/50-60HZ	
2300 W		2300 W		800 W		800 W	
75/110, 135/200, 220/320 & 390/570 RPM		55/85, 100/150, 200/300 & 350/520 RPM		240 RPM		190 AND 290 RPM	
YES		YES		NO		NO	
YES		YES		YES		NO	
YES		YES		-		-	
YES		YES		YES		YES	
YES		YES		-		-	
YES		YES		YES		YES	
4045 FT LBS (1835 KG)		5622 FT LBS (2550 KG)		1462 FT LBS (663 KG)		1686 FT LBS (765 KG)	
YES		YES		-		-	
DEAD LIFT	DRILL POINT BREAKAWAY	DEAD LIFT	DRILL POINT BREAKAWAY	DEAD LIFT	DRILL POINT BREAKAWAY	DEAD LIFT	DRILL POINT BREAKAWAY
2203 LBS (1000 KG)	880 LBS (400 KG)	2697 LBS (1223 KG)	1074 LBS (487 KG)	1461 LBS (662 KG)	1779 LBS (806 KG)	4945 LBS (2242 KG)	1945 LBS (882 KG)
4-3/8" X 8-3/4" X 2" (110 X 220 X 50 MM)		4-1/8" X 12-3/8" X 2" (105 X 315 X 50 MM)		3-1/8" X 3-1/8" X 5-1/2" (80 X 80 X 143 MM)		3-1/8" X 3-1/8" X 5-1/3" (80 X 80 X 143 MM)	
3/8" (10 MM)		3/8" (10 MM)		3/8" (10 MM)		3/8" (10 MM)	
YES		YES		NO		NO	
55 LBS (25 KG)		68 LBS (31 KG)		37 LBS (17 KG)		58 LBS (26.5 KG)	
SM-D-400XT (115V/60Hz) **SM-D400XT-230** (230V/50Hz)		**SM-D-500XT** (115V/60Hz) **SM-D-500XT-230** (230V/50Hz)		**SM-D1AIR -ATX** (115 V/60Hz) **SM-D1AIR-ATX-230** (230 V/50Hz)		**SM-D175** (115V/60Hz) **SM-D175-230** (230V/50Hz)	

©2018 STEELMAX

Industrial Arbors & Drill Chucks

CONVERT YOUR MAGNETIC DRILL FOR USE WITH TWIST DRILLS ON SMALLER HOLES

SM-DC-MT2-13	1/2" Drill chuck for MT2
SM-DC-MT3-13	1/2" Drill Chuck for MT3
SM-DC-MT3-20	3/4" Drill Chuck for MT3
SM-DC-MT4-13	1/2" Drill Chuck for MT4
SM-DC-MT4-20	3/4" Drill Chuck for MT4
SM-TLJ-0197-10-00-03-0	Adapter/Arbor Weldon 19x1/2" - 20 UNF for D1 Pro Drill
SM-DC-PRO40	Drilling Chuck 16-1/2" - 20 UNF for D1 Pro Drill
SM-IA-MT-2	MT2 Industrial Arbor for 3/4" Weldon Shank Cutters
SM-IA-MT-3	MT3 Industrial Arbor for 3/4" Weldon Shank Cutters
SM-IA-MT3-125	MT3 Industrial Arbor for 1-1/4" Weldon Shank Cutters
SM-IA-MT4-125	MT4 Industrial Arbor for 1-1/4" Weldon Shank Cutters
SM-IA-R8	R8 Industrial Arbor

Automatic Self-Reversing Tapping Heads

PRODUCE GAGE PERFECT THREADS QUICKLY AND EFFICIENTLY

Eliminate laborious hand tapping! Convert your magnetic base drill to a portable tapping machine. When the drill press spindle is raised, gears within the tapping head engage, causing the tapping head to reverse, quickly backing the tap out of the hole while producing perfect threads.

- Achieve higher production rates. Batch quantities and heavy production rapidly achieved through accuracy and repeatability of the tapping heads.
- The ball-clutch mechanism reduces tap breakage and can extend the life of the tap as much as 100%.
- A large planetary gear reverses the tap 75% faster than the drill speed.
- The tapping heads include rubber flex collets which can be used across the entire tapping head capacity.
- The Steelmax reversible tapping heads are excellent tools to work with any large capacity -variable speed magnetic drill.

SM-HR2	Reversing tapping head with MT3 1/8" - 1/2" (3 - 12 mm)
SM-HR3	Reversing tapping head with MT3 5/16" - 3/4" (8-20 mm)

HIGH PERFORMANCE, BIODEGRADABLE

Cutting Fluid

- 100% biodegradable; fully-synthetic, nitrite-free, water soluble concentrate
- High tech pressure additives provide outstanding tool life and finish
- Superior cooling properties
- No unpleasant odors; non-toxic & non-carcinogenic
- Excellent rust protection & non-corrosive
- Extends cutter life
- Low foaming; easy clean up

PART NUMBERS	SIZE
SM-TBCF-1Q	Quart
SM-TBCF-1G	Gallon
SM-TBCF-55G	55-Gallon Drum *(special order)*

For most cutting applications, a mix of 8:1 with water is typically recommended with this concentrated solution.

Made in USA.

Magnetic Pick-Up Tool

SAFETY FIRST!

Never pick up metal chips or shavings again.
This handy magnetic tool helps you put safety first.

- Safely remove metal chips and debris from machinery and work areas using the Steelmax magnetic pick-up tool.
- The slide action lever instantly demagnetizes the tool which releases chips for quick and safe disposal.
- Available in 10" and 15" lengths

PART NUMBERS	SIZE
SM-MP10	10" tool
SM-MP15	15" tool

All information is subject to change without notice.
©2019 STEELMAX

QUICK CHANGE TAPPING SYSTEM

Our XT magnetic drill line utilizes our proprietary tapping chuck and collet system transforming the magnetic drills into industry-leading tapping machines. With capacities from ¼" up to 1-5/8", giving the XT line the highest capacity of tapping on the market. Blind hole and through hole quick-change tapping collets are available.

- Quick change tapping system-compatible with XT version drills
- Customized tapping heads
- Ability to tap pre-drilled or blind holes
- Suitable for use with either quick-change clutched or positive driven type collet
- Quick fitting collar to securely hold the required tap

TAPPING CHUCK

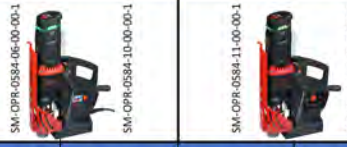

		SM-D-200-XT		SM-D-300-XT		SM-D-400-XT			SM-D-500-XT		
Thread	Without Safety Clutch	MT2	MT2	MT3	MT3	MT3	MT3	MT3	MT4	MT4	MT4
5/16"	SM-WKL-000167	SM-WKL-000167	SM-RDC-000008	SM-WKL-000167	SM-RDC-000008	SM-WKL-000167	SM-RDC-000008	SM-RDC-000009	SM-RDC-000008	SM-RDC-000009	
3/8"	SM-WKL-000168	SM-WKL-000168	SM-RDC-000008	SM-WKL-000168	SM-RDC-000008	SM-WKL-000168	SM-RDC-000008	SM-RDC-000009	SM-RDC-000008	SM-RDC-000009	
7/16"	SM-WKL-000169	SM-WKL-000169	SM-RDC-000008	SM-WKL-000169	SM-RDC-000008	SM-WKL-000169	SM-RDC-000008	SM-RDC-000009	SM-RDC-000008	SM-RDC-000009	
1/2"	SM-WKL-000170	SM-WKL-000170	SM-RDC-000008	SM-WKL-000170	SM-RDC-000008	SM-WKL-000170	SM-RDC-000008	SM-RDC-000009	SM-RDC-000008	SM-RDC-000009	
9/16"	SM-WKL-000171	SM-WKL-000171	SM-RDC-000008	SM-WKL-000171	SM-RDC-000008	SM-WKL-000171	SM-RDC-000008	SM-RDC-000009	SM-RDC-000008	SM-RDC-000009	
5/16"	SM-WKL-000173		SM-WKL-000173		SM-WKL-000173		SM-WKL-000173	SM-RDC-000010	SM-WKL-000173	SM-RDC-000010	SM-RDC-000011
3/8"	SM-WKL-000174		SM-WKL-000174		SM-WKL-000174		SM-WKL-000174	SM-RDC-000010	SM-WKL-000174	SM-RDC-000010	SM-RDC-000011
7/16"	SM-WKL-000175		SM-WKL-000175		SM-WKL-000175		SM-WKL-000175	SM-RDC-000010	SM-WKL-000175	SM-RDC-000010	SM-RDC-000011
1/2"	SM-WKL-000176		SM-WKL-000176		SM-WKL-000176		SM-WKL-000176	SM-RDC-000010	SM-WKL-000176	SM-RDC-000010	SM-RDC-000011
9/16"	SM-WKL-000177		SM-WKL-000177		SM-WKL-000177		SM-WKL-000177	SM-RDC-000010	SM-WKL-000177	SM-RDC-000010	SM-RDC-000011
5/8"	SM-WKL-000178		SM-WKL-000178		SM-WKL-000178		SM-WKL-000178	SM-RDC-000010	SM-WKL-000178	SM-RDC-000010	SM-RDC-000011
11/16"	SM-WKL-000179		SM-WKL-000179		SM-WKL-000179		SM-WKL-000179	SM-RDC-000010	SM-WKL-000179	SM-RDC-000010	SM-RDC-000011
3/4"	SM-WKL-000180		SM-WKL-000180		SM-WKL-000180		SM-WKL-000180	SM-RDC-000010	SM-WKL-000180	SM-RDC-000010	SM-RDC-000011
13/16"	SM-WKL-000181				SM-WKL-000181		SM-WKL-000181	SM-RDC-000010	SM-WKL-000181	SM-RDC-000010	SM-RDC-000011
7/8"	SM-WKL-000182						SM-WKL-000182	SM-RDC-000010	SM-WKL-000182	SM-RDC-000010	SM-RDC-000011
5/8"	SM-WKL-000183							SM-WKL-000183		SM-WKL-000183	SM-RDC-000012
11/16"	SM-WKL-000184							SM-WKL-000184		SM-WKL-000184	SM-RDC-000012
3/4"	SM-WKL-000185							SM-WKL-000185		SM-WKL-000185	SM-RDC-000012
13/16"	SM-WKL-000186							SM-WKL-000186		SM-WKL-000186	SM-RDC-000012
7/8"	SM-WKL-000187							SM-WKL-000187		SM-WKL-000187	SM-RDC-000012
15/16"	SM-WKL-000120							SM-WKL-000120		SM-WKL-000120	SM-RDC-000012
1"	SM-WKL-000121							SM-WKL-000121		SM-WKL-000121	SM-RDC-000012
1-1/8"	SM-WKL-000122							SM-WKL-000122		SM-WKL-000122	SM-RDC-000012
1-1/4"	SM-WKL-000123							SM-WKL-000123		SM-WKL-000123	SM-RDC-000012
7/8"	SM-WKL-000124										SM-WKL-000124
15/16"	SM-WKL-000125										SM-WKL-000125
1"	SM-WKL-000126										SM-WKL-000126
1-1/8"	SM-WKL-000127										SM-WKL-000127
1-1/4"	SM-WKL-000128										SM-WKL-000128
1-3/8"	SM-WKL-000129										SM-WKL-000129
1-1/2"	SM-WKL-000130										SM-WKL-000130
1-5/8"	SM-WKL-000131										SM-WKL-000131

TAPPING COLLET

Quick fitting collar to securely hold the required tap.

Compatible with XT Version Drills

TAPPING ATTACHMENTS

POSITIVE DRIVE COLLET

Designed for complete (through) hole threading

©2020 STEELMAX

STEELMAX TAPPING COLLETS AND CHUCKS

QUICK CHANGE TAPPING SYSTEM

Options for blind (partial) hole threading using any of The Steelmax Drilling & Tapping Machines.

CLUTCHED COLLET

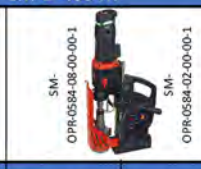

		SM-D-200-XT		SM-D-300-XT		SM-D-400-XT			SM-D-500-XT		
		SM-OPR-0584-06-00-00-1	SM-OPR-0584-10-00-00-1	SM-OPR-0584-11-00-00-1	SM-OPR-0584-08-00-00-1	SM-OPR-0584-11-00-00-1	SM-OPR-0584-08-00-00-1	SM-OPR-0584-02-00-00-1	SM-OPR-0584-09-00-00-1	SM-OPR-0584-04-00-00-1	SM-OPR-0584-07-00-00-1
Thread	With Safety Clutch	MT2	MT2	MT3	MT3	MT3	MT3	MT3	MT4	MT4	MT4
5/16"	SM-WKL-000133	SM-WKL-000133	SM-RDC-000008	SM-WKL-000133	SM-RDC-000008	SM-WKL-000133	SM-RDC-000008	SM-RDC-000009	SM-RDC-000008	SM-RDC-000009	
3/8"	SM-WKL-000134	SM-WKL-000134	SM-RDC-000008	SM-WKL-000134	SM-RDC-000008	SM-WKL-000134	SM-RDC-000008	SM-RDC-000009	SM-RDC-000008	SM-RDC-000009	
7/16"	SM-WKL-000135	SM-WKL-000135	SM-RDC-000008	SM-WKL-000135	SM-RDC-000008	SM-WKL-000135	SM-RDC-000008	SM-RDC-000009	SM-RDC-000008	SM-RDC-000009	
1/2"	SM-WKL-000136	SM-WKL-000136	SM-RDC-000008	SM-WKL-000136	SM-RDC-000008	SM-WKL-000136	SM-RDC-000008	SM-RDC-000009	SM-RDC-000008	SM-RDC-000009	
9/16"	SM-WKL-000137	SM-WKL-000137	SM-RDC-000008	SM-WKL-000137	SM-RDC-000008	SM-WKL-000137	SM-RDC-000008	SM-RDC-000009	SM-RDC-000008	SM-RDC-000009	
5/16"	SM-WKL-000139		SM-WKL-000139		SM-WKL-000139		SM-WKL-000139	SM-RDC-000010	SM-WKL-000139	SM-RDC-000010	SM-RDC-000011
3/8"	SM-WKL-000140		SM-WKL-000140		SM-WKL-000140		SM-WKL-000140	SM-RDC-000010	SM-WKL-000140	SM-RDC-000010	SM-RDC-000011
7/16"	SM-WKL-000141		SM-WKL-000141		SM-WKL-000141		SM-WKL-000141	SM-RDC-000010	SM-WKL-000141	SM-RDC-000010	SM-RDC-000011
1/2"	SM-WKL-000142		SM-WKL-000142		SM-WKL-000142		SM-WKL-000142	SM-RDC-000010	SM-WKL-000142	SM-RDC-000010	SM-RDC-000011
9/16"	SM-WKL-000143		SM-WKL-000143		SM-WKL-000143		SM-WKL-000143	SM-RDC-000010	SM-WKL-000143	SM-RDC-000010	SM-RDC-000011
5/8"	SM-WKL-000144		SM-WKL-000144		SM-WKL-000144		SM-WKL-000144	SM-RDC-000010	SM-WKL-000144	SM-RDC-000010	SM-RDC-000011
11/16"	SM-WKL-000145		SM-WKL-000145		SM-WKL-000145		SM-WKL-000145	SM-RDC-000010	SM-WKL-000145	SM-RDC-000010	SM-RDC-000011
3/4"	SM-WKL-000146		SM-WKL-000146		SM-WKL-000146		SM-WKL-000146	SM-RDC-000010	SM-WKL-000146	SM-RDC-000010	SM-RDC-000011
13/16"	SM-WKL-000147				SM-WKL-000147		SM-WKL-000147	SM-RDC-000010	SM-WKL-000147	SM-RDC-000010	SM-RDC-000011
7/8"	SM-WKL-000148						SM-WKL-000148	SM-RDC-000010	SM-WKL-000148	SM-RDC-000010	SM-RDC-000011
5/8"	SM-WKL-000149						SM-WKL-000149	SM-WKL-000149	SM-WKL-000149	SM-WKL-000149	SM-RDC-000012
11/16"	SM-WKL-000150							SM-WKL-000150		SM-WKL-000150	SM-RDC-000012
3/4"	SM-WKL-000151							SM-WKL-000151		SM-WKL-000151	SM-RDC-000012
13/16"	SM-WKL-000152							SM-WKL-000152		SM-WKL-000152	SM-RDC-000012
7/8"	SM-WKL-000153							SM-WKL-000153		SM-WKL-000153	SM-RDC-000012
15/16"	SM-WKL-000154							SM-WKL-000154		SM-WKL-000154	SM-RDC-000012
1"	SM-WKL-000155							SM-WKL-000155		SM-WKL-000155	SM-RDC-000012
1-1/8"	SM-WKL-000156							SM-WKL-000156		SM-WKL-000156	SM-RDC-000012
1-1/4"	SM-WKL-000157							SM-WKL-000157		SM-WKL-000157	SM-RDC-000012
7/8"	SM-WKL-000158										SM-WKL-000158
15/16"	SM-WKL-000159										SM-WKL-000159
1"	SM-WKL-000160										SM-WKL-000160
1-1/8"	SM-WKL-000161										SM-WKL-000161
1-1/4"	SM-WKL-000162										SM-WKL-000162

Tapping chuck
feat. securing nut

Product Code	Type	Description
RDC-000008	RA 2/1	Reduction Adapter 2/1 (31 mm / 19 mm)
RDC-000009	RA 3/1	Reduction Adapter 3/1 (48 mm / 19 mm)
RDC-000010	RA 3/2	Reduction Adapter 3/2 (48 mm / 31 mm)
RDC-000011	RA 4/2	Reduction Adapter 4/2 (60 mm / 31 mm)
RDC-000012	RA 4/3	Reduction Adapter 4/3 (60 mm / 48 mm)

RA – Reduction Adapters
gives the ability to use larger tapping chuck with smaller size collets*

Product Code	Type	Description
OPR-0584-06-00-00-1	MT2-19	Tapping chuck MT2 x 19 mm
OPR-0584-10-00-00-1	MT2-31	Tapping chuck MT2 x 31 mm
OPR-0584-11-00-00-1	MT3-19	Tapping chuck MT3 x 19 mm
OPR-0584-08-00-00-1	MT3-31	Tapping chuck MT3 x 31 mm
OPR-0584-02-00-00-1	MT3-48	Tapping chuck MT3 x 48 mm
OPR-0584-09-00-00-1	MT4-31	Tapping chuck MT4 x 31 mm
OPR-0584-04-00-00-1	MT4-48	Tapping chuck MT4 x 48 mm
OPR-0584-07-00-00-1	MT4-60	Tapping chuck MT4 x 60 mm

Shipping set of tapping chuck incl. HD-CUT OIL1

©2014 STEELMAX

VACUUM PAD FOR MAG DRILLS FROM STEELMAX®

VACUUM PAD FOR DRILLING On Non-Ferrous Materials

SAFELY & SECURELY USE MAGNETIC BASED DRILLS ON NON-FERROUS MATERIALS

Bring the portability and convenience of a magnetic based drill to any non-ferrous material with the Mag Drill Vacuum Pad from Steelmax. This Vacuum Pad enables Steelmax magnetic based drills to effectively operate on non-ferrous materials, where magnetic adhesion of a magnetic based drill is not possible.

The Vacuum Pad can be used with either a vacuum pump or connected to a compressed air system to provide adhesion to the material. A steel plate on top of the Vacuum Pad allows the magnetic based drill to safely adhere to the pad and be used as if it were drilling in ferrous material*.

FEATURES

- Enables drilling on flat non-ferrous materials
- Designed for use with Steelmax D1, D1 Pro & D200XT, Magnetic based drills
- Included 6ft connection hose provides increased portability
- Can beconfigured with s
  vacuum pump (standard) or
  a compressed air supply (optional)

*Note: A 2" arbor extension and longer pilot pin are required to maintain the full depth of cut of the annular cutter.

VACUUM SUPPLY

COMPRESSED AIR SUPPLY

©2019 STEELMAX

VACUUM PAD FOR MAG DRILLS

VACUUM SUPPLY
Portable vacuum pump with safety reservoir -

SM-AGR-0541-24-10-00-0 for 115 V
SM-AGR-0541-24-20-00-0 for 230 V

COMPRESSED AIR SUPPLY

Utilize an existing compressed air system
Compressed air ejector
SM-ZSP-0587-11-00-00-0

Technical Specifications of VACUUM PAD for Mag Drill Vacuum Supply		
Gauge pressure*		-11.5 psig ('-0.8 bar)
Connection		Quick Coupling DN 7.2
Capacity		141 ft3/h (4m3/h)
Holding force (at gauge pressure of -0.8 bar/-11.5 psig)	0 m above sea level	3540 ft lbf 2802 ft lbf
Minimum workpiece thickness		3/16" (5 mm)
Drilling depth decrease		1-9/16" (40 mm)
Dimensions		19-3/16" x 8-7/16" x 4-3/16" 488 mm x 214 mm x 107mm
Supply hose length		6.5 ft. (2 m)
Required ambient temperature		34-104 F (1-40 C)
Weight		16.5 lbs (7.5kg)
Part Number		SM-PDS-0587-10-00-00-0 0-00-00-1

Additional Required Equipment

Using vacuum pad results in a decrease in annular cutter regular depth of cut by 1.5" (40 mm).
An arbor extension and longer pilot pins allow for full depth of cut.

Pilot Pin

2" (50 mm) Arbor Extension
- Product code: SM-WS-EX-2
- Requires longer pilot pin (depending on cutter used)

TECHNICAL SPECIFICATION OF VACUUM PAD FOR MAG DRILL – COMPRESSED AIR SUPPLY		
Supply		6 bar (87 psi)
Connection		Quick-coupling fitting DN 7.2
Air consumption		141 ft3/h (4 m3/h)
Supply hose length		6.5 ft (2 m)
Holding force (at gauge pressure of –0.8 bar / –11.5 psig)	0 m above sea level 1500 m above sea level	3540 ft lbf 2802 ft lbf
Required ambient temperature		34–104°F (1-40 °C)
Diameter of supply hose extension (if needed)		5/16" (8 mm)
Maximum total length of supply hose (including supply hose extension)		32' 9" (10 m)

HSS & TCT ANNULAR CUTTERS

A FULL LINE OF HIGH-QUALITY ANNULAR CUTTERS – OFFERING OUR CUSTOMERS THE LOWEST COST PER HOLE ON THE MARKET TODAY

Steelmax offers a full line of high-quality High Speed Steel (HSS) and Tungsten Carbide Tipped (TCT) annular cutters for all of your hole-making needs. We stock a full range of both HSS and TCT cutters from 7/16” to 6" in diameter and 1", 2", 3",4” & 6” depths of cut. All Steelmax annular cutters have standard Weldon shanks (3/4" shank for cutter diameters up to 2-3/8" and 1-1/4" shank for cutter diameters above 2-3/8"). As a result, Steelmax cutters will fit and improve the performance of any mag drill!

Custom sizes are also available.

All Steelmax cutters ship with a pilot pin installed at no extra charge.

Annular cutters have many advantages over traditional twist drills:

- Eliminates costly and time consuming step-drilling
- Significantly less drilling time – 3-4 times faster than twist drills
- Longer tool life – 5-10 times as many holes as a comparable twist drill bit
- More accurate and higher quality holes – burr-free with no clean up
- Easily drill on curved surfaces such as pipe or tubing
- Create overlapping holes
- Lower machine and horsepower requirements when compared to twist drills

HSS Cutters

Steelmax HSS cutters utilize an M2Al (aluminum additive) formulation which increases cutter life due to better heat propagation characteristics and its less brittle character compared to other M2 formulations, such as those using a cobalt additive. HSS cutters are most cost effective for mild steel applications and holes up to 2-3/8" in diameter in material up to 2" thick and can be re-sharpened to extend cutter life.

TCT Cutters

Steelmax TCT cutters are made with the highest quality carbide available and are extremely well suited to work on harder materials and higher speed applications. TCT cutters are most cost effective for larger holes (over 1-1/2" in diameter) and in thicker materials (2" and over).

Cutting Fluid

Steelmax High-Performance Cutting Fluid should be used with all annular cutters for optimal cutting performance and to extend cutter life. Our High-Performance Cutting Fluid is a water-based cutting fluid that is bio-degradable and does not require time-consuming cleanup prior to welding or assembling parts.

Steelmax®
The tools of innovation.

All information is subject to change without notice.

M2AL HSS Annular Cutters

STEELMAX M2AL HSS ANNULAR CUTTERS					
Diameter	Decimal Equivalent	1" DOC Part Number	2" DOC Part Number	4" DOC Part Number	6" DOC Part Number
7/16"	0.4375	SM-AC-04375-1	SM-AC-04375-2	4" and 6" DOC Cutters not available in these diameters	
1/2"	0.5000	SM-AC-05000-1	SM-AC-05000-2		
9/16"	0.5625	SM-AC-05625-1	SM-AC-05625-2		
5/8"	0.6250	SM-AC-06250-1	SM-AC-06250-2		
11/16"	0.6875	SM-AC-06875-1	SM-AC-06875-2	SM-AC-06875-4	
3/4"	0.7500	SM-AC-07500-1	SM-AC-07500-2	SM-AC-07500-4	
13/16"	0.8125	SM-AC-08125-1	SM-AC-08125-2	SM-AC-08125-4	
7/8"	0.8750	SM-AC-08750-1	SM-AC-08750-2	SM-AC-08750-4	SM-AC-08750-6
15/16"	0.9375	SM-AC-09375-1	SM-AC-09375-2	SM-AC-09375-4	SM-AC-09375-6
1"	1.0000	SM-AC-10000-1	SM-AC-10000-2	SM-AC-10000-4	SM-AC-10000-6
1-1/16"	1.0625	SM-AC-10625-1	SM-AC-10625-2	SM-AC-10625-4	SM-AC-10625-6
1-1/8"	1.1250	SM-AC-11250-1	SM-AC-11250-2	SM-AC-11250-4	SM-AC-11250-6
1-3/16"	1.1875	SM-AC-11875-1	SM-AC-11875-2	SM-AC-11875-4	SM-AC-11875-6
1-1/4"	1.2500	SM-AC-12500-1	SM-AC-12500-2	Other sizes available by special order. Please call for more information.	
1-5/16"	1.3125	SM-AC-13125-1	SM-AC-13125-2		
1-3/8"	1.3750	SM-AC-13750-1	SM-AC-13750-2		
1-7/16"	1.4375	SM-AC-14375-1	SM-AC-14375-2		
1-1/2"	1.5000	SM-AC-15000-1	SM-AC-15000-2		
1-9/16"	1.5625	SM-AC-15625-1	SM-AC-15625-2		
1-5/8"	1.6250	SM-AC-16250-1	SM-AC-16250-2		
1-11/16"	1.6875	SM-AC-16875-1	SM-AC-16875-2		
1-3/4"	1.7500	SM-AC-17500-1	SM-AC-17500-2		
1-13/16"	1.8125	SM-AC-18125-1	SM-AC-18125-2		
1-7/8"	1.8750	SM-AC-18750-1	SM-AC-18750-2		
1-15/16"	1.9375	SM-AC-19375-1	SM-AC-19375-2		
2"	2.0000	SM-AC-20000-1	SM-AC-20000-2		
2-1/16"	2.0625	SM-AC-20625-1	SM-AC-20625-2		
2-1/8"	2.1250	SM-AC-21250-1	SM-AC-21250-2		
2-3/16"	2.1875	SM-AC-21875-1	SM-AC-21875-2		
2-1/4"	2.2500	SM-AC-22500-1	SM-AC-22500-2		
2-5/16"	2.3125	SM-AC-23125-1	SM-AC-23125-2		
2-3/8"	2.3750	SM-AC-23750-1	SM-AC-23750-2		

Pilot Pins included with 1", 2", 3" and 4" DOC cutter. Pilot Pin for 6" DOC must be purchased separately

TCT Annular Cutters

STEELMAX TCT ANNULAR CUTTERS

Diameter	Decimal Equivalent	1-3/8" DOC Part Number	2" DOC Part Number	3" DOC Part Number	4" DOC Part Number	6" DOC Part Number
1/2"	0.5000	SM-AC-TC-05000-1	SM-AC-TC-05000-2	Available by Special Order		
9/16"	0.5625	SM-AC-TC-05625-1	SM-AC-TC-05625-2			
5/8"	0.6250	SM-AC-TC-06250-1	SM-AC-TC-06250-2			
11/16"	0.6875	SM-AC-TC-06875-1	SM-AC-TC-06875-2			
3/4"	0.7500	SM-AC-TC-07500-1	SM-AC-TC-07500-2	SM-AC-TC-07500-3	SM-AC-TC-07500-4	SM-AC-TC-07500-6
13/16"	0.8125	SM-AC-TC-08125-1	SM-AC-TC-08125-2	SM-AC-TC-08125-3	SM-AC-TC-08125-4	SM-AC-TC-08125-6
7/8"	0.8750	SM-AC-TC-08750-1	SM-AC-TC-08750-2	SM-AC-TC-08750-3	SM-AC-TC-08750-4	SM-AC-TC-08750-6
15/16"	0.9375	SM-AC-TC-09375-1	SM-AC-TC-09375-2	SM-AC-TC-09375-3	SM-AC-TC-09375-4	SM-AC-TC-09375-6
1"	1.0000	SM-AC-TC-10000-1	SM-AC-TC-10000-2	SM-AC-TC-10000-3	SM-AC-TC-10000-4	SM-AC-TC-10000-6
1-1/16"	1.0625	SM-AC-TC-10625-1	SM-AC-TC-10625-2	SM-AC-TC-10625-3	SM-AC-TC-10625-4	SM-AC-TC-10625-6
1-1/8"	1.1250	SM-AC-TC-11250-1	SM-AC-TC-11250-2	SM-AC-TC-11250-3	SM-AC-TC-11250-4	SM-AC-TC-11250-6
1-3/16"	1.1875	SM-AC-TC-11875-1	SM-AC-TC-11875-2	SM-AC-TC-11875-3	SM-AC-TC-11875-4	SM-AC-TC-07500-6
1-1/4"	1.2500	SM-AC-TC-12500-1	SM-AC-TC-12500-2	SM-AC-TC-12500-3	SM-AC-TC-12500-4	SM-AC-TC-12500-6
1-5/16"	1.3125	SM-AC-TC-13125-1	SM-AC-TC-13125-2	SM-AC-TC-13125-3	SM-AC-TC-13125-4	SM-AC-TC-13125-6
1-3/8"	1.3750	SM-AC-TC-13750-1	SM-AC-TC-13750-2	SM-AC-TC-13750-3	SM-AC-TC-13750-4	SM-AC-TC-13750-6
1-7/16"	1.4375	Available by Special Order	SM-AC-TC-14375-2	SM-AC-TC-14375-3	SM-AC-TC-14375-4	SM-AC-TC-14375-6
1-1/2"	1.5000		SM-AC-TC-15000-2	SM-AC-TC-15000-3	SM-AC-TC-15000-4	SM-AC-TC-15000-6
1-9/16"	1.5625		SM-AC-TC-15625-2	SM-AC-TC-15625-3	SM-AC-TC-15625-4	SM-AC-TC-15625-6
1-5/8"	1.6250		SM-AC-TC-16250-2	SM-AC-TC-16250-3	SM-AC-TC-16250-4	SM-AC-TC-16250-6
1-11/16"	1.6875		SM-AC-TC-16875-2	SM-AC-TC-16875-3	SM-AC-TC-16875-4	SM-AC-TC-16875-6
1-3/4"	1.7500		SM-AC-TC-17500-2	SM-AC-TC-17500-3	SM-AC-TC-17500-4	SM-AC-TC-17500-6
1-13/16"	1.8125		SM-AC-TC-18125-2	SM-AC-TC-18125-3	SM-AC-TC-18125-4	SM-AC-TC-18125-6
1-7/8"	1.8750		SM-AC-TC-18750-2	SM-AC-TC-18750-3	SM-AC-TC-18750-4	SM-AC-TC-18750-6
1-15/16"	1.9375		SM-AC-TC-19375-2	SM-AC-TC-19375-3	SM-AC-TC-19375-4	SM-AC-TC-19375-6
2"	2.0000		SM-AC-TC-20000-2	SM-AC-TC-20000-3	SM-AC-TC-20000-4	SM-AC-TC-20000-6
2-1/16"	2.0625		SM-AC-TC-20625-2	SM-AC-TC-20625-3		
2-1/8"	2.1250		SM-AC-TC-21250-2	SM-AC-TC-21250-3		
2-3/16"	2.1875		SM-AC-TC-21875-2	SM-AC-TC-21875-3		
2-1/4"	2.2500		SM-AC-TC-22500-2	SM-AC-TC-22500-3		
2-5/16"	2.3125		SM-AC-TC-23125-2	SM-AC-TC-23125-3		
2-3/8"	2.3750		SM-AC-TC-23750-2	SM-AC-TC-23750-3		

Pilot Pins included with 1", 2", 3" and 4" DOC cutter. Pilot Pin for 6" DOC must be purchased separately

Steelmax®
The tools of innovation.

STEELMAX® METRIC HSS ANNULAR CUTTERS

STEELMAX M2AL METRIC HSS ANNULAR CUTTERS			
Diameter	Decimal Equivalent	1" DOC Part Number	2" DOC Part Number
14mm	0.5512	SM-AC-14-M-1	SM-AC-14-M-2
15mm	0.5906	SM-AC-15-M-1	SM-AC-15-M-2
16mm	0.6299	SM-AC-16-M-1	SM-AC-16-M-2
17mm	0.6693	SM-AC-17-M-1	SM-AC-17-M-2
18mm	0.7087	SM-AC-18-M-1	SM-AC-18-M-2
19mm	0.7480	SM-AC-19-M-1	SM-AC-19-M-2
20mm	0.7874	SM-AC-20-M-1	SM-AC-20-M-2
21mm	0.8268	SM-AC-21-M-1	SM-AC-21-M-2
22mm	0.8661	SM-AC-22-M-1	SM-AC-22-M-2
23mm	0.9055	SM-AC-23-M-1	SM-AC-23-M-2
24mm	0.9449	SM-AC-24-M-1	SM-AC-24-M-2
25mm	0.9843	SM-AC-25-M-1	SM-AC-25-M-2
26mm	1.0236	SM-AC-26-M-1	SM-AC-26-M-2
27mm	1.0630	SM-AC-27-M-1	SM-AC-27-M-2
28mm	1.1024	SM-AC-28-M-1	SM-AC-28-M-2
29mm	1.1417	SM-AC-29-M-1	SM-AC-29-M-2
30mm	1.1811	SM-AC-30-M-1	SM-AC-30-M-2
31mm	1.2205	SM-AC-31-M-1	SM-AC-31-M-2
32mm	1.2598	SM-AC-32-M-1	SM-AC-32-M-2
33mm	1.2992	SM-AC-33-M-1	SM-AC-33-M-2
34mm	1.3386	SM-AC-34-M-1	SM-AC-34-M-2
35mm	1.3780	SM-AC-35-M-1	SM-AC-35-M-2
36mm	1.4173	SM-AC-36-M-1	SM-AC-36-M-2
37mm	1.4567	SM-AC-37-M-1	SM-AC-37-M-2
38mm	1.4961	SM-AC-38-M-1	SM-AC-38-M-2
39mm	1.5354	SM-AC-39-M-1	SM-AC-39-M-2
40mm	1.5748	SM-AC-40-M-1	SM-AC-40-M-2
41mm	1.6142	SM-AC-41-M-1	SM-AC-41-M-2
42mm	1.6535	SM-AC-42-M-1	SM-AC-42-M-2
43mm	1.6929	SM-AC-43-M-1	SM-AC-43-M-2
44mm	1.7323	SM-AC-44-M-1	SM-AC-44-M-2
45mm	1.7717	SM-AC-45-M-1	SM-AC-45-M-2
46mm	1.8110	SM-AC-46-M-1	SM-AC-46-M-2
47mm	1.8504	SM-AC-47-M-1	SM-AC-47-M-2
48mm	1.8898	SM-AC-48-M-1	SM-AC-48-M-2
49mm	1.9291	SM-AC-49-M-1	SM-AC-49-M-2
50mm	1.9685	SM-AC-50-M-1	SM-AC-50-M-2

Pilot Pins included with metric HSS cutter purchases

Steelmax

STEELMAX LARGE DIAMETER TCT ANNULAR CUTTERS					
Diameter	Decimal Equivalent	2" DOC Part Number	Diameter	Decimal Equivalent	2" DOC Part Number
2-7/16"	2.4375	SM-AC-TC-24375-2	4-1/4"	4.2500	SM-AC-TC-42500-2
2-1/2"	2.5000	SM-AC-TC-25000-2	4-5/16"	4.3125	SM-AC-TC-43125-2
2-9/16"	2.5625	SM-AC-TC-25625-2	4-3/8"	4.3750	SM-AC-TC-43750-2
2-5/8"	2.6250	SM-AC-TC-26250-2	4-7/16"	4.4375	SM-AC-TC-44375-2
2-11/16"	2.6875	SM-AC-TC-26875-2	4-1/2"	4.5000	SM-AC-TC-45000-2
2-3/4"	2.7500	SM-AC-TC-27500-2	4-9/16"	4.5625	SM-AC-TC-45625-2
2-13/16"	2.8125	SM-AC-TC-28125-2	4-5/8"	4.6250	SM-AC-TC-46250-2
2-7/8"	2.8750	SM-AC-TC-28750-2	4-11/16"	4.6875	SM-AC-TC-46875-2
2-15/16"	2.9375	SM-AC-TC-29375-2	4-3/4"	4.7500	SM-AC-TC-47500-2
3"	3.0000	SM-AC-TC-30000-2	4-13/16"	4.8125	SM-AC-TC-48125-2
3-1/16"	3.0625	SM-AC-TC-30625-2	4-7/8"	4.8750	SM-AC-TC-48750-2
3-1/8"	3.1250	SM-AC-TC-31250-2	4-15/16"	4.9375	SM-AC-TC-49375-2
3-3/16"	3.1875	SM-AC-TC-31875-2	5"	5.0000	SM-AC-TC-50000-2
3-1/4"	3.2500	SM-AC-TC-32500-2	5-1/16"	5.0625	SM-AC-TC-50625-2
3-5/16"	3.3125	SM-AC-TC-33125-2	5-1/8"	5.1250	SM-AC-TC-51250-2
3-3/8"	3.3750	SM-AC-TC-33750-2	5-3/16"	5.1875	SM-AC-TC-51875-2
3-7/16"	3.4375	SM-AC-TC-34375-2	5-1/4"	5.2500	SM-AC-TC-52500-2
3-1/2"	3.5000	SM-AC-TC-35000-2	5-5/16"	5.3125	SM-AC-TC-53125-2
3-9/16"	3.5625	SM-AC-TC-35625-2	5-3/8"	5.3750	SM-AC-TC-53750-2
3-5/8"	3.6250	SM-AC-TC-36250-2	5-7/16"	5.4375	SM-AC-TC-54375-2
3-11/16"	3.6875	SM-AC-TC-36875-2	5-1/2"	5.5000	SM-AC-TC-55000-2
3-3/4"	3.7500	SM-AC-TC-37500-2	5-9/16"	5.5625	SM-AC-TC-55625-2
3-13/16"	3.8125	SM-AC-TC-38125-2	5-5/8"	5.6250	SM-AC-TC-56250-2
3-7/8"	3.8750	SM-AC-TC-38750-2	5-11/16"	5.6875	SM-AC-TC-56875-2
3-15/16"	3.9375	SM-AC-TC-39375-2	5-3/4"	5.7500	SM-AC-TC-57500-2
4"	4.0000	SM-AC-TC-40000-2	5-13/16"	5.8125	SM-AC-TC-58125-2
4-1/16"	4.0625	SM-AC-TC-40625-2	5-7/8"	5.8750	SM-AC-TC-58750-2
4-1/8"	4.125	SM-AC-TC-41250-2	5-15/16"	5.9375	SM-AC-TC-59375-2
4-3/16"	4.1875	SM-AC-TC-41875-2	6"	6.0000	SM-AC-TC-60000-2

Pilot Pins included with large diameter Annular Cutter purchases

Steelmax®

The tools of innovation.

STEELMAX® ANNULAR CUTTER SETS

Steelmax Cutter Set SM-AC-SET-7-1
1" Depth of Cut, 3/4" Shank

Cutter Diameter	Decimal Equivalent	Part Number
9/16"	0.5625	SM-AC-05625-1
11/16"	0.6875	SM-AC-06875-1
13/16"	0.8125	SM-AC-08125-1
15/16"	0.9375	SM-AC-09375-1
1-1/16"	1.0625	SM-AC-10625-1
1" Pilot Pin		SM-PP-02

Steelmax Cutter Set SM-AC-SET-7-2
2" Depth of Cut, 3/4" Shank

Cutter Diameter	Decimal Equivalent	Part Number
9/16"	0.5625	SM-AC-05625-2
11/16"	0.6875	SM-AC-06875-2
13/16"	0.8125	SM-AC-08125-2
15/16"	0.9375	SM-AC-09375-2
1-1/16"	1.0625	SM-AC-10625-2
2" Pilot Pin		SM-PP-04

Coutersinks For Magnetic Drills
3/4" Weldon Shank

Diameter	# of Flutes	Degree	Part Number
1"	3	82	SM-CTS-1000-82
1"	3	90	SM-CTS-1000-90
1-1/2"	3	82	SM-CTS-1500-82
1-1/2"	3	90	SM-CTS-1500-90
2"	3	82	SM-CTS-2000-82
2"	3	90	SM-CTS-2000-90

Twist Bits for Magnetic Drills
3/4" Weldon Shank

Diameter	Decimal Equivalent	Depth of Cut	Part Number
1/4"	0.2500	2"	SM-AC-TB-02500-2
5/16"	0.3125	2"	SM-AC-TB-03125-2
3/8"	0.3750	2"	SM-AC-TB-03750-2

Quick Change Adaptors for 3/4" Weldon Shank Cutters*

	1" DOC HSS Cutters	2" DOC HSS Cutters 2" DOC TCT Cutters	3" DOC TCT Cutters
Adapator	SM-NDA-634	SM-NDA-634	SM-NDA-798
Pilot Pin	SM-PP-04	SM-PP-19	SM-PP-20

*Allows any standard 3/4" weldon shank cutter to fit in a Nitto Drill

Steelmax point-of-sale cutter display available. Call for details.

Steelmax Cutter Set SM-AC-SET-13-1
1" Depth of Cut, 3/4" Shank

Cutter Diameter	Decimal Equivalent	Part Number
7/16"	0.4375	SM-AC-04375-1
1/2"	0.5000	SM-AC-05000-1
9/16"	0.5625	SM-AC-05625-1
5/8"	0.6250	SM-AC-06250-1
11/16"	0.6875	SM-AC-06875-1
3/4"	0.7500	SM-AC-07500-1
13/16"	0.8125	SM-AC-08125-1
7/8"	0.8750	SM-AC-08750-1
15/16"	0.9375	SM-AC-09375-1
1"	1.0000	SM-AC-10000-1
1-1/16"	1.0625	SM-AC-10625-1
1" Pilot Pin (7/16")		SM-PP-01
1" Pilot Pin		SM-PP-02

Steelmax Cutter Set SM-AC-SET-13-2
2" Depth of Cut, 3/4" Shank

Cutter Diameter	Decimal Equivalent	Part Number
7/16"	0.4375	SM-AC-04375-2
1/2"	0.5000	SM-AC-05000-2
9/16"	0.5625	SM-AC-05625-2
5/8"	0.6250	SM-AC-06250-2
11/16"	0.6875	SM-AC-06875-2
3/4"	0.7500	SM-AC-07500-2
13/16"	0.8125	SM-AC-08125-2
7/8"	0.8750	SM-AC-08750-2
15/16"	0.9375	SM-AC-09375-2
1"	1.0000	SM-AC-10000-2
1-1/16"	1.0625	SM-AC-10625-2
2" Pilot Pin (7/16")		SM-PP-03
2" Pilot Pin		SM-PP-04

Steelmax

All information is subject to change without notice. ©2019 STEELMAX

PORTABLE HYDRAULIC PUNCHES FROM STEELMAX®

HP60 & HP110

FULLY PORTABLE PUNCHES PRODUCE SMOOTH PRECISE HOLES IN SECONDS

Available in two models with 35 ton and 47 ton capacities, Steelmax Portable Hydraulic Punches are ideal solutions to speed the production of holes and slots in beam flanges, angle, channel, plates and bar stock. The Double Action design minimizes cycle times and, coupled with high portability, promotes reduced material handling generating highly efficient hole production compared to other processes.

Primary features and benefits:

- Maximum Hole Diameter 1-1/16" (27 mm)
- Double Action Design Prevents Punch Binding and Speeds Retraction
- Intelligent Control System with Automatic Load Detection and Mode Indicator Light
- Rugged Forged Steel "C" Frame for Strength and Durability
- Fully Portable Punch and Pump Package Reduces Material Handling
- Optional Free Standing Base with Foot Pedal permits Bench Top Operation

SM-HP700
Hydraulic Punch Power Pack

HP60/HP110 Round Hole Capacities
(60,000 PSI Shear Strength Material)

Plate Thickness	1/16	1/8	3/16	1/4	5/16	3/8	7/16	1/2	9/16	5/8
HP60[1]	1-1/16	1-1/16	1-1/16	1-1/16	1-1/16	1	13/16	3/4	–	–
HP110[2]	1-1/16	1-1/16	1-1/16	1-1/16	1-1/16	1-1/16	1-1/16	1	7/8	3/4

1. HP 60 maximum plate thickness is 1/2"
2. HP 110 maximum plate thickness is 5/8"

PORTABLE HYDRAULIC PUNCHES FROM STEELMAX®

TECHNICAL SPECIFICATIONS		
Portable Double-Action Hydraulic Punch	**SM-HP60**	**SM-HP110**
Max. throat depth	2-3/8" (60 mm)	4-5/16" (110 mm)
Max. hole*	1-1/16" (Ø 27 mm)	1-1/16" (Ø 27 mm)
Max. oblong hole	25 x 18 mm	25 x 18 mm
Punch cycle time	5 sec	8 sec
Max. plate thickness*	1/2" (13 mm)	5/8" (16 mm)
Punch power	35 ton	47 ton
Working pressure	10,000 psi	10,000 psi
Weight	44 lbs (20 kg)	77 lbs (35 kg)

*See round hole capacity chart on previous page.

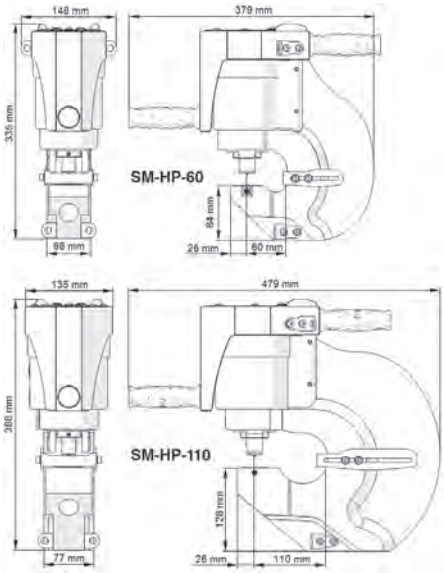

Ready to work in both vertical and horizontal positions

Ergonomic location of "quick-connect" ports at the rear of unit

Double-Action Hydraulic Power Pack SM-HP700	
Power supply*	230V/50Hz; 115V/60Hz
Motor power	1500 W
Working pressure	10,000 psi
Pump output	1.5 L/min
Oil capacity	10 L

*Contact Steelmax for other voltage options

Portable hydraulic power pack with shelf for punch transport SM-HP700

Spring balancers available for both machines SM-BLN-000005

Steelmax

All information is subject to change without notice.
©2019 STEELMAX

OPTIONAL ACCESSORIES

Free Standing Base for Punch SM-ZST-0507-91-00-00-0
With Foot Petal Activation for bench top operation

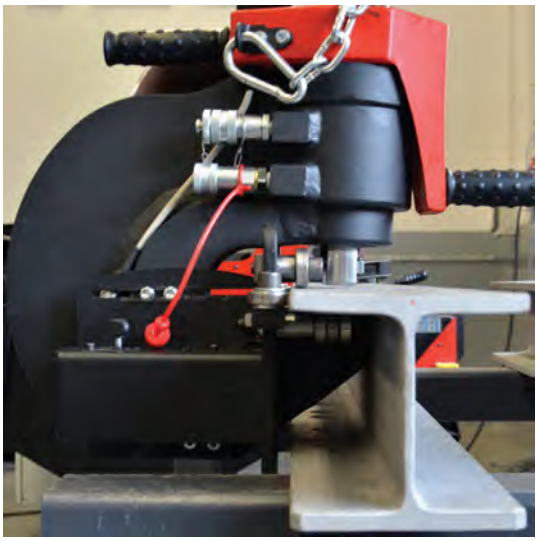

Wheeled Carriage for Punch SM-PRW-0507-90-00-00-0
Permits smooth and efficient lineal movement along the work piece.

Overhead Support for Punch
SM-ZUR-0517-15-00-00-1
Integrated overhead boom support allows for easy manipulation of punch and power pack as single unit.

Punches & dies

HOLE DIAMETER	DECIMAL EQUIVALENT	PUNCH PART #	DIE PART#
5/16	0.3125	SM-HP-P-0313	SM-HP-D-0313
3/8	0.3750	SM-HP-P-0375	SM-HP-D-0375
7/16	0.4375	SM-HP-P-0438	SM-HP-D-0438
1/2	0.5000	SM-HP-P-0500	SM-HP-D-0500
9/16	0.5625	SM-HP-P-0563	SM-HP-D-0563
5/8	0.6250	SM-HP-P-0625	SM-HP-D-0625
11/16	0.6875	SM-HP-P-0688	SM-HP-D-0688
3/4	0.7500	SM-HP-P-0750	SM-HP-D-0750
13/16	0.8125	SM-HP-P-0813	SM-HP-D-0813
7/8	0.8750	SM-HP-P-0875	SM-HP-D-0875
15/16	0.9375	SM-HP-P-0938	SM-HP-D-0938
1	1.0000	SM-HP-P-1000	SM-HP-D-1000
1 1/16	1.0625	SM-HP-P-1063	SM-HP-D-1063

Slot sizes in stock. Other sizes available by special order.

5 DEGREE DIES AVAILABLE

All information is subject to change without notice.
©2019 STEELMAX

S14 METAL CUTTING SAW

14" BLADE DIAMETER WITH STABLE CAST IRON BASE

Pick up a Steelmax saw this morning, and it can pay for itself by the end of the day.

When a saw is engineered to work as efficiently as the Steelmax S14, your purchase pays immediate dividends. With its precise, fast, clean, burr-free, cool-to-touch cutting, further processing is eliminated, saving you expensive de-burring and further machining. Only Steelmax has a "quick-pipe clamp" built onto its base that allows the S14 to securely hold round material, pipe and tubing so it doesn't come loose or turn when being cut – which could damage the material or blade. A heavy cast iron base reduces vibration to extend blade life and provide more precise cutting.

FEATURES

- Mitering capability up to 45º
- Powerful 15 amp, 1750W motor
- 1450 rotations per minute
- Stable cast iron base
- Quick adjustment vise with innovative quick-pipe clamp
- Includes hearing and eye protection, and extra set of carbon brushes
- Pipe capacity up to 4-3/4"
- 1" Arbor Bore, chip collection tray
- Includes a 14" TCT mild steel cutting blade
- UL 745 certified

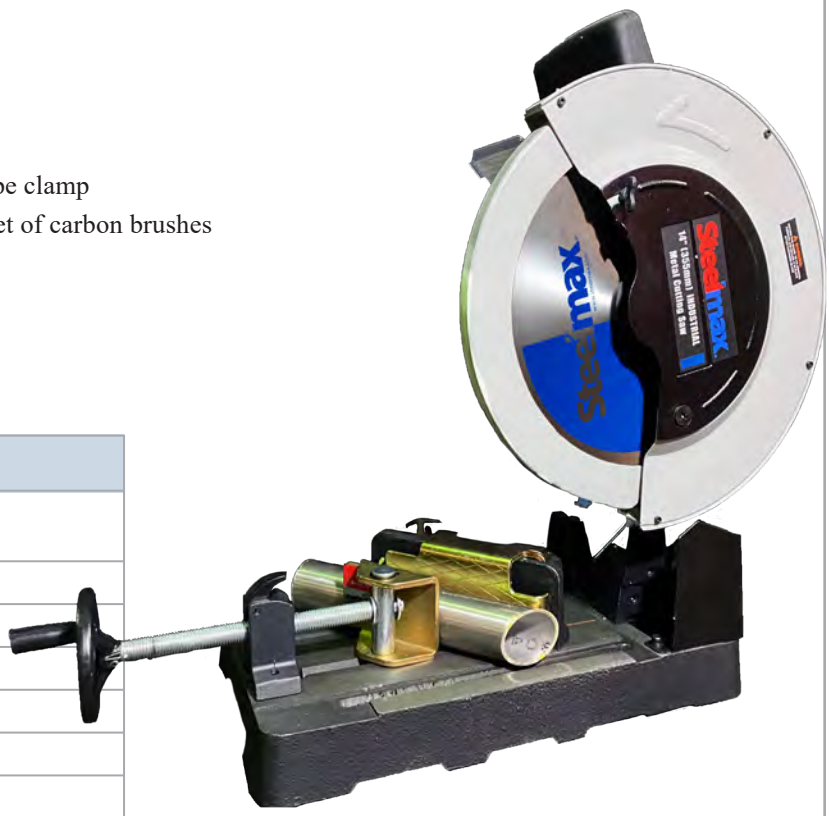

Steelmax S14 Technical Specifications	
Cutting capacity 1" solid	4-3/4" profile
Weight	64 lbs
Blade diameter	14"
Arbor	1"
RPM	1450
Beveling/Mitering	Mitering/45°
Motor	120V / 1750W 2.3 HP
Depth adjustment	2-position vice
Chip tray	Slide out
Applications	Pipe, plate, channel, conduit, angle iron, metal studs, rebar, tubing, etc.
Part number	**SM-S14-C** (120V/60Hz)

S14 03/2019 All information is subject to change without notice. ©2019 STEELMAX

TUNGSTEN CARBIDE & CERMET TIPPED SAW BLADES

CUT MILD STEEL, STAINLESS STEEL, ALUMINUM & THIN STEEL FAST & CLEAN

Steelmax metal cutting saw blades are designed to provide maximum performance when cutting ferrous and nonferrous metals. Compared to abrasive cutting wheels, Steelmax metal cutting saw blades cut faster and more accurately. They also impart less heat and produce no hazardous dust. Steelmax blades are offered with Tungsten Carbide Tips (TCT) or Cermet (Ceramic Metallic) Tips, designed for clean cool cutting of mild steel, stainless steel, aluminum and thin steel. They are suitable for cutting plate, grating, angle, channel, tube, pipe and many other materials.

TCT BLADES

Our industry leading Tungsten Carbide Tipped (TCT) saw blades utilize the highest-quality European C6 grade tungsten carbides. With application-specific tooth counts and rake geometry, Steelmax offers a TCT saw blade to cut any material for any job.

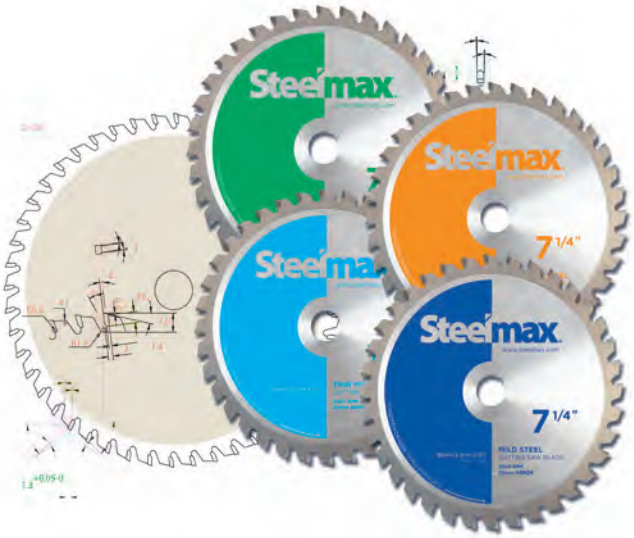

FEATURES

- High-quality, European C6 Tungsten Carbide Tips
- Clean cuts with fewer sparks and burrs
- Cool cutting
- Designed with varying tooth counts and rake angles for specific purposes
- Safe alternative to abrasive cutoff wheels

CERMET TIPPED BLADES

For heavy-duty cutting applications, Steelmax Cermet Tipped saw blades offer superior wear and heat resistance for long cutting life. These blades feature a super-thin kerf for fast, efficient cutting and laser-cut stabilizer slots, reducing dissonant noise and vibration for maximum stability and precise cuts. Our proprietary blade geometry, incorporating wide and shallow tooth pockets, combined with our advanced Triple Chip Grind, provide speed and durability for clean, burr-free cuts in even the hardest alloys.

FEATURES

- Cermet Tips for high impact and wear resistance
- Laser-cut body and stabilizer slots for smooth operation
- Triple Chip Grind for rapid cutting
- Stainless Steel versions feature a two-step blade body and a Fluorine coating for added lubricity for reduced friction
- Proprietary blade geometry (wide & shallow tooth pockets) improves blade stability and durability

Steelmax®
The tools of innovation.

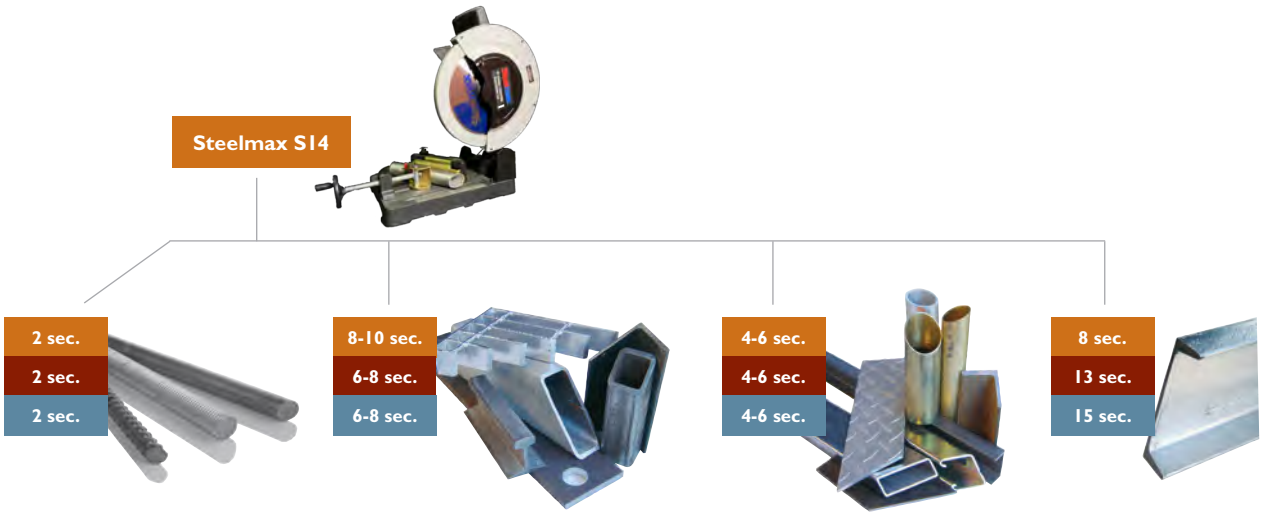

Tungsten Carbide Tipped Metal Cutting Saw Blades					
Blade Diameter	Part No.	Teeth	Arbor	RPM (MAX)	Applications
7.25"	SM-BL-07-5	36T	20mm	3500	Mild Steel (less than 5/16")
7.25"	SM-BL-07-5-TS	68T	20mm	3500	Thin Mild Steel (less than 1/4")
7.25"	SM-BL-07-5-AL	54T	20mm	3500	Aluminum (up to 3/8")
7.25"	SM-BL-07-5-SS	48T	20mm	3500	Stainless Steel (less than 1/8")
8.0"	SM-BL-08	48T	5/8"	3700	Mild Steel (less than 1/2")
9.0"	SM-BL-09	48T	1.0"	2700	Mild Steel (less than1/2")
9.0"	SM-BL-09-TS	80T	1.0"	2700	Thin Mild Steel (less than 1/4")
9.0"	SM-BL-09-AL	80T	1.0"	2700	Aluminum (up to 3/8")
9.0"	SM-BL-09-SS	54T	1.0"	2700	Stainless Steel (less than 1/8")
12.0"	SM-BL-12	60T	1.0"	1000	Mild Steel (less than 1")
14.0"	SM-BL-14	66T	1.0"	1450	Mild Steel (less than1")
14.0"	SM-BL-14-TS	90T	1.0"	1450	Thin Mild Steel (less than 1/4")
14.0"	SM-BL-14-AL	100T	1.0"	1450	Aluminum (up to 3/8")
14.0"	SM-BL-14-SS	90T	1.0"	1450	Stainless Steel (less than 1/4")
15.0"	SM-BL-15	70T	1.0"	1600	Mild Steel (less than 1")

Cermet Tipped Metal Cutting Saw Blades					
Blade Diameter	Part No.	Teeth	Arbor	RPM (MAX)	Applications
7.25"	SM-BL-CT-07-5	36T	20mm	5500	Mild Steel (less than 5/16")
7.25"	SM-BL-CT-07-5-SS	64T	20mm	5500	Stainless Steel (less than 1/8")
9.0"	SM-BL-CT-09	44T	1.0"	3500	Mild Steel (less than1/2")
9.0"	SM-BL-CT-09-SS	76T	1.0"	3500	Stainless Steel (less than 1/8")
14.0"	SM-BL-CT-14	64T	1.0"	1500	Mild Steel (less than1")
14.0"	SM-BL-CT-14-SS	110T	1.0"	1500	Stainless Steel (less than 1/4")

Steelmax Blades fit other manufacturers saws: See below for cross brand compatibilty
15” Saw Blade: Evolution EVOSAW380
ALL 14” Saw blades:
Steelmax S14, Evolution EVOSAW380 I RAGE2, DeWalt DW872, Fein Slugger MCCS14, Milwaukee 6190-20, MK Morse CSM14MB, Ridgid 614.
ALL 7-1/4” Saw blades:
Steelmax S7xp, Evolution EVOSAW180HD I RAGE-B I EVOSAW185HD I S185CCS I RAGE4 Saws , Fein Slugger MCSL07Standard Circular Saws*.
ALL 9” Saw blades:
Steelmax S9xp, Evolution EVOSAW230, MK Morse CSM9MB, Fein Slugger MCSL09 / MCSL09-2

All information is subject to change without notice.
©2019 STEELMAX

Steelmax®

The tools of innovation.

PLATE & PIPE BEVELING SOLUTIONS

All information is subject to change without notice.

©2019 STEELMAX

BM18 PORTABLE BEVELER

BEVEL OR RADIUS FLAT, CURVED OR ROLLED PLATE

The Steelmax **BM18** is a light-weight portable beveling machine for use on flat, curved or rolled plate. It can also perform O.D. and I.D. bevels on pipe, including deburring, and can chamfer and countersink holes with a minimum diameter of 1-9/16" (40 mm). Interchangeable bevel milling heads, utilizing indexable carbide inserts, are available for bevel angles of 22.5°, 30°, 37.5°, 45° and 60°. A radius milling head is also available with indexable carbide inserts to radius plate edges with a perfect 2, 3, 4 and 5 mm radius

The **BM18** is equipped with a simple bevel depth adjustment and electronic speed control for use on a variety of materials, including steel and aluminum. The **BM18** is highly efficient for edge weld preparation and for producing radius plate edges for optimal paint and coating adhesion. The compact design makes the **BM18** an excellent tool for many fabrication applications.

FEATURES

- Highly efficient beveling machine – up to 10 times faster than grinding
- Produces no hazardous dust, greatly improving working environment
- Guide plate and roller guides insure consistent, highly accurate bevel angles
- Lightweight ergonomic design reduces worker fatigue
- Variable speed control permits adjustment of milling head for use on various grades of steel and aluminum
- Versatile tool which can be used to bevel or radius mill straight edges, contours and holes
- Ideal solution for radius milling for paint and coating preparation
- Optional anti-abrasion plate and special inserts available for aluminum milling

BM18 Technical Specifications	
Power Supply	1~ 110-120 V, 50-60 Hz 1~ 220-240 V, 50-60 Hz
Spindle Speed (Without Load)	1800–5850 rpm
Maximum Bevel Width (b)	b=11/16" (18 mm), Fig. 1
Bevel Angle (ß, depending on milling head)	ß = 22.5°, 30°, 37.5°, 45°, 50°, 55°, 60° (Fig. 1)
Radius Edge Milling	R2, R3, R4, R5, see figure 2
Minimum Material Thickness	1/16" (2 mm)
Minimum Diameter for Countersinking	1-9/16" (40mm)
Dimensions (L x W x H)	23" x 6" x 9-1/2" (585 x 156 x 238 mm)
Weight (Without Milling Head)	22 lbs (10 kg)
Part Numbers	SM-BM18 (120V/50-60Hz) SM-BM18-230 (230V/50-60Hz)
Motor	2200W

Basic set:

- BM18 beveling machine
- Plastic carrying case
- Tool kit set
- Operator's manual

Milling head , roller and inserts sold separately.

Figure 1

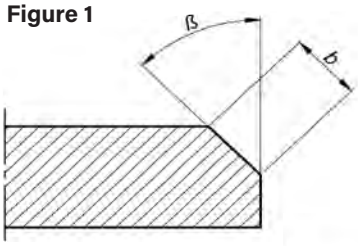

Figure 2

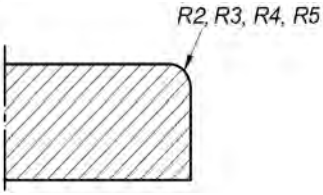

Beveling Accessories to be Chosen by Customer:	
SM-GLW-0640-30-01-00-0	Beveling Milling Head 22.5°
SM-GLW-0640-30-02-00-0	Beveling Milling Head 30°
SM-GLW-0640-30-03-00-0	Beveling Milling Head 37.5°
SM-GLW-0640-30-04-00-0	Beveling Milling Head 45°
SM-GLW-0640-30-07-00-0	Beveling Milling Head 60°
SM-PLY-000395	Beveling Insert for Steel (5 Required)
SM-PLY-000195	Beveling Insert for Aluminum (5 Required)
SM-PLY-000735	Beveling Insert for High Tensile Strength Materials (5 Required)
SM-RLK-0640-99-02-00-0	Beveling Roller

Radius Edge Milling Accessories to be Chosen by Customer:	
SM-GLW-0640-30-34-00-0	Radius Milling Head
SM-UST-0509-16-00-00-0	Radius Edge Milling Depth Setting Tool
SM-PLY-000737	Radius Insert R2 (4 Required)
SM-PLY-000738	Radius Insert R3 (4 Required)
SM-PLY-000739	Radius Insert R4 (4 Required)
SM-PLY-000740	Radius Insert R5 (4 Required)
SM-RLK-0640-99-03-00-0	Radius Roller

Optional Accessories:	
SM-PRW-0509-07-00-00-0	Pipe Beveling Attachment
SM-NKL-0509-05-00-00-0	Anti Abrasion Plate for Aluminum Milling
SM-ZBD-0509-12-00-00-0	Small Workpiece Machining Table

Spare Parts:	
SM-SRB-000289	Insert Set Screw (Radius)
SM-SRB-000290	Insert Set Screw (Beveling)
SM-SMR-000005	Anti Seize Grease (5 g)

RADIUS EDGE MILLING DEPTH SETTING TOOL

PIPE BEVELING ATTACHMENT
ID ≥ 110 MM
OD ≥ 150 MM

SMALL WORKPIECE MACHINING TABLE

Steelmax®
The tools of innovation.

ALL INFORMATION IS SUBJECT TO CHANGE WITHOUT NOTICE.
©2022 STEELMAX

BM20 Plus PORTABLE BEVELER

HEAVY-DUTY TOOL PRODUCES HIGH-QUALITY MACHINED BEVELS

The Steelmax BM20 Plus is a portable, heavy-duty hand-operated beveling machine designed to mill accurate high-quality bevels for weld preparation on plate and pipe. Utilizing a rotary milling head and ten four-sided indexable carbide inserts, the BM20 Plus will create precise bevel angles that improve fit-up time, eliminate weld defects and reduce welding consumables.

Unlike thermal cutting for weld preparation, the BM20 Plus produces no heat-affected zone or distortion of the work piece. This simple-to-operate machine can be carried anywhere and will eliminate costly material handling associated with moving plates around the shop to stationary burning and milling machines.

Automatic thermal overload protection circuitry protects the motor from premature failure, providing a reliable tool that can withstand the toughest jobs.

FEATURES

- Portable, heavy-duty machine
- Equipped with guide rolls for easy operation
- Automatic motor overload protection
- Fitted with two milling heads for smooth and efficient operation
- Adjustable bevel angle, 15°- 60°

APPLICATIONS

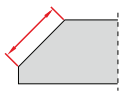

Max. bevel width
13/16"
(21 mm)

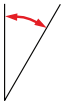

Bevel angles
15°-60°

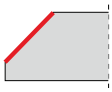

Top beveling

(Optional accessory required)

Plate Facing

(Optional accessory required)

Pipe beveling
6" - 12" (150 - 300 mm) OD
10" - 24" (260 - 600 mm) OD

Steelmax®
The tools of innovation.

BM20 Plus Technical Specifications	
Voltage	115V/ 60Hz or 230V/ 50Hz
Power	1800 W Induction Motor
Spindle Speed	2820 rpm
Tooling	Two milling heads with 10 square cutting inserts
Max Bevel Width	13/ 16" (21 mm) *(see fig. 1)*
Bevel Angle	15° - 60° *(see fig. 1)* 0° *(see Facing Attachment)*
Weight	45 lbs (20.5 Kg)
Part Number	SM-BM20+ (115V/ 60Hz) SM-BM20+-230 (230V/ 50Hz)

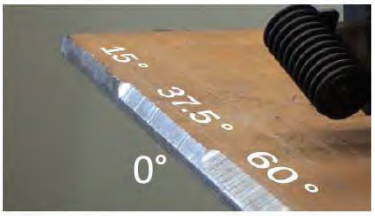

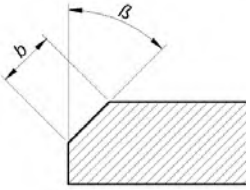

ß	15°	30°	45°	60°
b	21 mm	20.5 mm	21 mm	20.5 mm

Figure 1: Bevel dimensions – maximum achievable bevel width depending on the bevel angle (multiple 1/4" passes)

2 rotary milling heads, each holding five 4-sided indexable inserts

Cutting insert
(1 piece)
PART NO. SM–PLY–000282
10 inserts required

Plate beveling

Plate facing (option)

Pipe beveling (option)

Optional Accessories:

Pipe beveling attachment
6" - 12" (150 - 300 mm)
PART NO. SM–ZSP–0075–31–00–00–0

Large Pipe beveling attachment
10" - 24" (260 - 600 mm)
PART NO. SM–ZSP–0075–31–00–00–1

Facing attachment (0°)
enables beveling at zero degrees
PART NO. SM–ZSP–0075–32–00–00–1

Steelmax

©2019 STEELMAX

BM21 PORTABLE BEVELING MACHINE

PRODUCE HIGH-QUALITY MACHINED BEVELS EFFICIENTLY WITH THIS PORTABLE ERGONOMIC POWER TOOL

Reduce your costs and lay the foundation for high-quality welds with the Steelmax BM21. Inaccurate bevels and poor weld preparation are often the root cause of weld defects and excessive welding costs. This machine utilizes a high-speed rotary milling head with ten carbide inserts to produce precise bevel angles from 0 to 60 degrees that dramatically improve fit up and all subsequent welding operations.

Unlike flame or plasma cut weld preparation, the BM21 produces no heat affected zone or distortion of the work piece. This portable tool can be carried anywhere and eliminates time consuming and costly material handling associated with moving plates around the shop to stationary burning and milling machines.

The BM21 features an ergonomic design that includes vibration dampening technology to protect the operator and the machine during heavy continuous operation. Automatic thermal overload protection circuitry protects the motor from premature failure, providing a reliable tool that can withstand the toughest jobs. The BM21 can be used on plate and pipe without any additional accessories.

FEATURES:

- Single milling head with 10 carbide inserts produces weld-ready bevels quickly and more efficiently with less operator effort
- Fast and easy exchange of carbide inserts minimizes down time
- Working range from 0 to 60 degrees with continuous angle adjustment
- Simple bevel angle and bevel width set up
- Vibration insulation protects both the operator and the machine electronics
- Universal guide plate requires no additional accessories for beveling both plate and pipe

Vibration dampers produce smooth operation

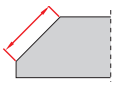

Max. bevel width
13/16" (21mm)

Bevel angles
0-60°

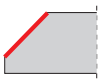

Top
beveling

Facing
Max 13/16" (21mm)

Pipe beveling
OD 6 - 12"; option: OD 10 - 24"

Steelmax®
The tools of innovation.

PORTABLE BEVELING MACHINE FROM STEELMAX®

BM21 Technical Specifications	
Voltage	115V 60 Hz or 230V 50 Hz
Power	1800 W Induction Motor
Spindle Speed	2820 RPM
Tooling	Integrated Milling Head with 10 Square Carbide Inserts
Bevel Angle	0° - 60° Continuous Angle Adjustment
Max Bevel Width	13/16" (21 mm)
Weight	43 lbs (20 Kg)
Part Number	**SM-BM21** (115V/60Hz) **SM-BM21-230** (230V/50Hz)

Plate facing

Plate beveling

Pipe beveling

Mono block milling head, with 10 indexable inserts.

Continuous angle adjustment from 0 to 60 degrees.

Single universal guide plate for beveling both plates, and for pipes ø 6-12" (150-300 mm)

An optional guide is needed for larger pipes with a diameter of 10-24" (260-600 mm)
Part No. SM-PRW-0461-22-00-00-0

Enhanced Vibration Dampening

The BM21 incorporates industry leading anti-vibration technology for more comfortable operation and extended machine life.

Testing indicates that this new anti-vibration system **reduces vibration by up to 37%** over comparable machines.

CONSUMABLES

Part No.
SM-PLY-000591 High Tensile strength inserts (10 required)

Part No.
SM-PLY-000282 Beveling inserts (10 required)

Steelmax

All information is subject to change without notice.

©2019 STEELMAX

BM21 SS

PRODUCE HIGH-QUALITY MACHINED BEVELS IN STAINLESS STEEL WITH THIS PORTABLE ERGONOMIC POWER TOOL

The Steelmax BM21 SS beveling machine is a customized version of our industry-leading BM21 beveling machine specifically designed for use on stainless steel plate and pipe. Inaccurate bevels and poor weld preparation often lead to weld defects and excessive welding costs. With expensive stainless steels, accurate weld preparation is even more important. The BM21 SS utilizes a rotary milling head with ten carbide inserts to produce precise bevel angles from 0 to 60 degrees that dramatically improve fit up and all subsequent welding operations. Designed specifically for stainless steel applications, the BM21 SS utilizes a lower speed motor to improve machining and all contact surfaces are made of stainless steel to eliminate carbon contamination of the stainless steel work piece.

Unlike flame or plasma cut weld preparation, the BM21 SS produces no heat affected zone or distortion of the work piece. This portable tool can be carried anywhere and eliminates time consuming and costly material handling associated with moving plates around the shop to stationary burning and milling machines.

The BM21 SS features an ergonomic design that includes vibration dampening technology to protect the operator and the machine during heavy continuous operation. Automatic thermal overload protection circuitry protects the motor from premature failure, providing a reliable tool that can withstand the toughest jobs. The BM21 SS can be used on plate and pipe without any additional accessories.

FEATURES

- All stainless steel contact surfaces to eliminate carbon contamination
- Single milling head using 10 indexable carbide inserts produces weld-ready bevels quickly and efficiently with low operator effort
- Fast and easy exchange of inserts with no need for special adjustment
- Working range from 0 to 60 degrees with continuous angle adjustment
- Simple bevel angle and bevel width setup
- Advanced vibration isolation protects both the operator and the machine
- Universal guide plate requires no additional accessories for beveling both plate and pipe

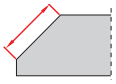

Max. bevel width
13/16" (21 mm)

Bevel angles
0-60°

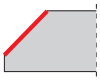

Top beveling

Facing off

Pipe beveling
OD 6 - 12" (150-300 mm)
OD 10 - 14" (260-600 mm)
(option)

Steelmax®
The tools of innovation.

BM21 SS Technical Specifications	
Voltage	115V 60 Hz or 230V 50 Hz
Power	1800 W Induction Motor
Spindle Speed	1560 RPM
Tooling	Integrated Milling Head with 10 Square Carbide Inserts
Bevel Angle	0° - 60° Continuous Angle Adjustment
Max Bevel Width	13/16" (21 mm)
Weight	51 lbs (23 Kg)
Part Number	**SM-BM21-SS** (115V/60Hz) **SM-BM21-SS-230** (230V/50Hz)

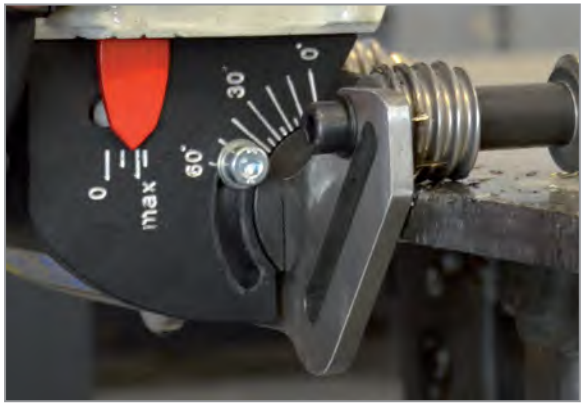

Continuous angle adjustment from 0 to 60 degrees

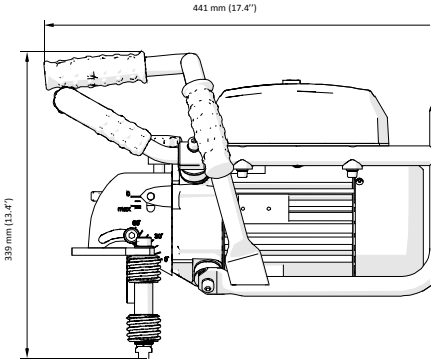

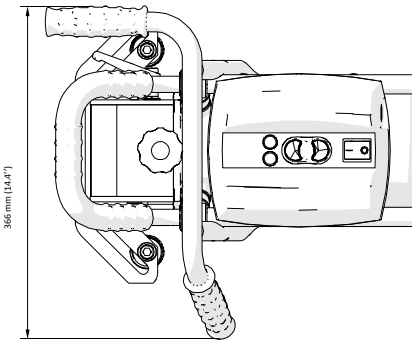

Standard universal guide plate
made of Stainless Steel
for beveling both plates and pipes
Ø 6-12" (150-300 mm)

Plate facing

Consumables	
SM-PLY-000282	Beveling Insert
SM-PLY-000591	High Tensile Strength Inserts
OLJ-0505-09-00-00-0	HD Cut Oil for Stainless Steel (18 oz)

Pipe beveling

Steelmax®
The tools of innovation.

All information is subject to change without notice.
©2019 STEELMAX

BM 25 PORTABLE PLATE BEVELING MACHINE

PRODUCE HIGH-QUALITY MACHINED BEVELS EFFICIENTLY WITH THIS PORTABLE ERGONOMIC POWER TOOL

The **Steelmax BM 25** produces accurate, high quality, machined bevels from 0 to 90 degrees with a maximum bevel width up to 1" (25mm) using a high-speed rotary milling head with 5 replaceable carbide cutting inserts. The newly designed unit produces consistent and repeatable bevel geometry that promotes better fit-up and high-quality welding results which reduce costs and rework. The milled finish requires no additional grinding or secondary work, and plates are weld ready. In addition to producing high quality bevels, this versatile machine can be used for 90-degree plate facing for square groove butt welds.

The **BM 25** from Steelmax is equipped with a powerful variable speed 2200-watt motor to assure efficiency in weld prep of steel plates, and it features an ergonomic design that allows each user to adjust grip and handle position to create maximum comfort during operation.

FEATURES

- Continuous bevel width adjustment from 0 to 90 degrees
- Guide set with rollers can be rotated through 360 degrees
- Precision guide rails ensure accurate and repeatable cutting performance
- Motor overload protection
- Variable spindle speed
- Powerful 2200 w motor
- 1" (25mm) maximum bevel
- Adjustable grip & handle increases comfort for ergonomic operation

Steelmax
The tools of innovation.

PORTABLE HEAVY DUTY BEVELING MACHINE

BM 25 Technical Specifications	
Power Supply	110-120 V, 50–60 Hz or 220-240 V, 50–60 Hz
Power	2200 W
Spindle Speed (Without Load)	1800-5850 rpm
Maximum Bevel Width (b)	1" (25 mm)
Bevel Angle (ß, depending on milling head)	0°-90°
Maximum Depth of Cut	1/ 2" (12.5mm)
Minimum workpiece thickness	1/8" (2 mm)
Weight (Without Milling Head)	28 lbs (12.5 kg)
Part Numbers	SM-BM 25 (120V/ 50-60Hz) SM-BM 25-230 (230V/ 50-60Hz)

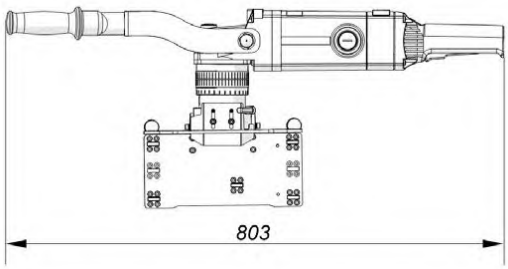

Ergonomic handle increases ease of use for left & right handed operators

Basic Set

- Beveling machine incl. milling head with 5 cutting inserts
- Plastic box
- 3 chip guards (basic, 30°, 45°)
- Grease for screws (5 g, 0.17 oz)
- 22 mm flat wrench
- 10 mm and 4 mm hex wrenches
- Operator's manual

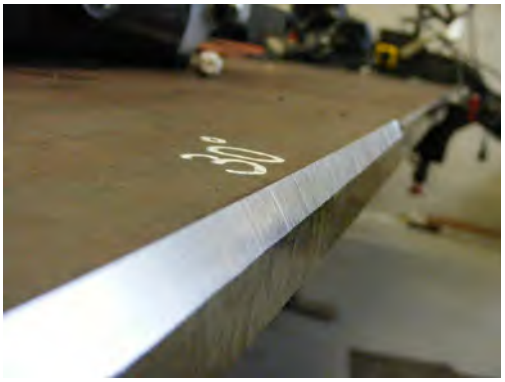

Milling Heads & Consumables

- SM-GLW-000052 Milling head
- SM-PLY-000756 Cutting insert

Milling head equipped with 5 cutting inserts

Steelmax®
The tools of innovation.

All information is subject to change without notice.

©2022 STEELMAX

ABM1218 FR Double-Sided Plate/Pipe Beveling Machine

HIGH SPEED, AUTOMATIC SHEARING, BEVELING MACHINE

The Steelmax ABM1218 is a portable beveling machine capable of producing weld-ready bevels on flat plates of any shearable material up to 100,000 psi tensile strength. The ABM1218 FR uses a shearing process that is silent and fast. A powerful 3 horsepower electric motor drives the machine at speeds up to 8.5 feet per minute, making it the most powerful machine in its class. The machine can produce a 1/2" (12 mm) wide bevel in a single pass and can produce a maximum 3/4" (18 mm) wide bevel on plates or round tubes from 1/4" (6 mm) to 1-9/16" (40 mm) thick in multiple passes.

A 30° bevel angle attachment is included with the ABM1218 FR and interchangeable bevel angle attachments are available for 22.5°, 25°, 30°, 35°, 37.5° and 45° bevels. The machine is easily inverted to bevel the underside of the plate – eliminating the need to flip the material – improving operational safety and increasing productivity.

The ABM1218 FR produces no smoke or dust and almost no noise. Bevels are produced without thermal distortion and the material is weld-ready without additional grinding to remove dross, slag or heat affected zone (HAZ).

FEATURES

- 3 horsepower motor
- Self-feeding for consistent bevel geometry from end-to-end
- 180° inversion allows for quick and easy creation of double-sided bevels – dramatically reducing material handling costs and improving safety.
- Shearing cutting wheels are long lasting, quiet and fast – beveling up to 8.5 ft/min
- Functions as a traveling machine with the trolley, or as a stationary machine
- Portable machine that can easily be moved throughout the shop
- Great machine for creating weld coupons
- Bevel pipe and round tubes 4" in diameter and larger

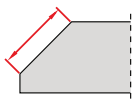

Bevel width up to 3/4" (18 mm)

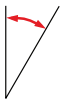

Bevel angles 22.5°, 25°, 30°, 35°, 37.5°, 45°

Min plate thickness 6 mm Max plate thickness 1-9/16" (40 mm)

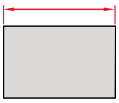

Min plate width 2-3/16" (55 mm)

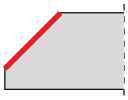

Top beveling

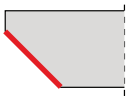

Bottom beveling

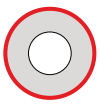

Pipe OD beveling Min. ID 4" (100 mm)

Steelmax®
The tools of innovation.

PLATE & PIPE BEVELER FROM STEELMAX®

ABM 1218 FR Technical Specifications	
Voltage	480V, 3 Phase/230V, 3 Phase (50-60 Hz)
Power	2,200 Watts
Spindle Speed	9 RPM
Bevel Angle Range (β, Fig. 1)	22.5°, 25°, 30°, 35°, 37.5°, 45°
Maximum Bevel Width (b, Fig. 1)	3/4" (18 mm)
Maximum Bevel in a Single Pass	1/2" (12 mm)
Minimum Plate Thickness	1/4" (6 mm)
Maximum Plate Thickness	1-9/16" (40 mm)
Minimum Plate Width	2-3/16" (55 mm)
Cutting Speed	8.5 ft/min (2.6 m/min)
Minimum Pipe ID	4" (100 mm)
Weight	144 lbs (65 Kg)
Part Number	SM-ABM-1218 FR-480V SM-ABM-1218 FR-230V

Fig. 1

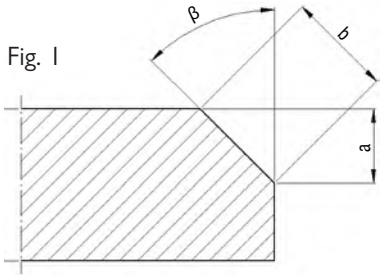

β	Max b	Max a
22.5°	3/4" (18 mm)	5/8" (16.6 mm)
25°	3/4" (18 mm)	5/8" (16.3 mm)
30°	3/4" (18 mm)	9/16" (15.6 mm)
35°	3/4" (18 mm)	9/16" (14.7 mm)
37.5°	3/4" (18 mm)	9/16" (14.3 mm)
45°	3/4" (18 mm)	1/2" (12.7 mm)

STANDARD SET INCLUDES:

- ABM 1218 Beveling machine
- 30° Bevel angle attachment
- 1 cutting wheel for mild steel
- Cutter extraction tool
- Flat wrenches:
  12-13 mm, 18-19 mm, 24-26 mm
- Hex wrenches: 5 mm and 6 mm
- Operator's manual

CONSUMABLES AND ANGLE ATTACHMENTS

- SM-ABM-1218-CW-MS Cutting wheel for mild steel
- SM-ABM-1218-CW-SS Cutting wheel for stainless steel
- SM-ABM-1218-CW-AL Cutting wheel for aluminum

- SM-ABM-1218-AVD-22.5 22.5° Bevel angle attachment
- SM-ABM-1218-AVD-25.0 25° Bevel angle attachment
- SM-ABM-1218-AVD-30.0 30° Bevel angle attachment
- SM-ABM-1218-AVD-35.0 35° Bevel angle attachment
- SM-ABM-1218-AVD-37.5 37.5° Bevel angle attachment
- SM-ABM-1218-AVD-45.0 45° Bevel angle attachment
- SM-ABM-TR Trolley

Steelmax®
The tools of innovation.

AUTO FEED BEVELING MACHINE FROM STEEMAX®

ABM-30 Auto-Feed Double Side Beveler

PRODUCE HIGH-QUALITY MACHINED BEVELS EFFICIENTLY WITH PORTABLE AUTO-FEED BEVELING MACHINE MACHINE

The Steelmax ABM30 produces accurate high-quality machined bevels on plate thickness from 5/16” to 2-3/8” (8-60mm) using a rotary milling head with replaceable carbide inserts. The machine features an adjustable bevel angle from 0 to 70 degrees for both topside and bottom side beveling and can produce a maximum bevel width in multiple passes up to 1-3/16” (30mm).

Root face dimensions remain accurate and repeatable from plate to plate, promoting better fit-up and consistent weld geometry. The milled finish is produced without thermal distortion and is ready to weld without additional grinding to remove, slag or heat affected zone (HAZ).

FEATURES

- Self-feeding for consistent bevel geometry from end-to-end
- Real-time on-screen display of motor load
- Variable travel speed
- 180° inversion allows for quick and easy creation of double-sided bevels eliminating the need to flip the material – improving operational safety and increasing productivity
- Rotary milling head with carbide inserts produces an accurate, high-quality finish without thermal distortion that is weld ready
- Built-in overload protection
- Portable Machine that can easily be moved throughout the shop

Dimensions

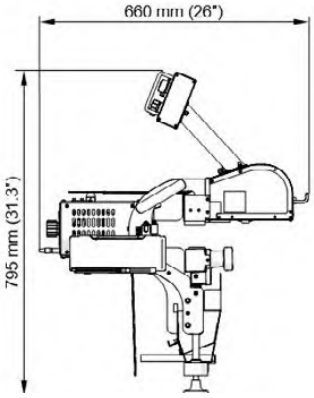

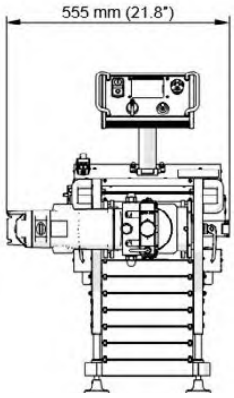

Precise bevel angle setting

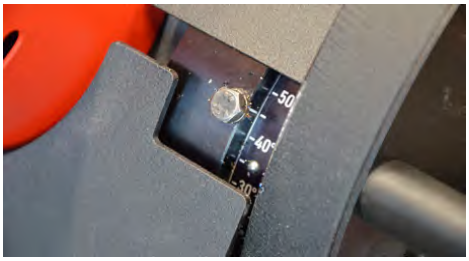

Steelmax
The tools of innovation.

AUTO FEED PLATE BEVELER FROM STEELMAX®

Top Beveling

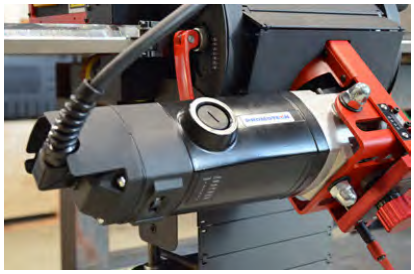

Bottom Beveling

Facing

Fig. 1

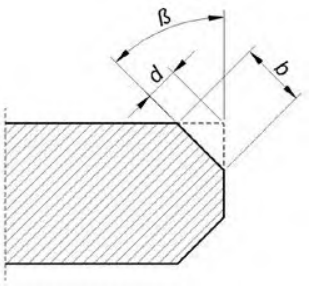

ABM 30 Technical Specifications	
Voltage	1~ 110-120 V, 50/60 Hz 1~ 200-240 V, 50/60 Hz
Power	2200 W
Spindle Speed (no load)	1800-5850 RPM
Feed Speed	72"/min
Bevel Angle (β, Fig. 1)	From -70° to 70°*
Maximum bevel width	1-3/16" (30 mm)
Required Ambient Temperature	41°F -104°F (5-40°C)
Plate Thickness Range	5/16"-2-3/8"" (8 -60 mm)
Weight	116.8 Lbs (53 Kg)
Part Number	**SM-ABM-30**

Standard Set Includes:

- Beveling machine (with a milling head) and 5 cutting inserts
- Tool kit

Control Panel Features:

- Feed direction indication
- Material detection
- Bar graph for motor load illustration
- Visual warning signals

Steelmax®
The tools of innovation.

ABM50 AUTO-FEED DOUBLE-SIDED BEVELER

SELF–PROPELLED, INVERTIBLE BEVELING MACHINE REDUCES MATERIAL HANDLING

The Steelmax ABM50 produces accurate, high-quality, machined bevels on plates from 5/16” to 3-1/8” (8-80 mm) thick using a high-speed rotary milling head with replaceable carbide inserts. The machine features an infinitely adjustable bevel angle between 15 and 60 degrees and is capable of producing bevels up to 2” (50 mm) wide. The ABM50 incorporates onboard spindle speed adjustment to optimally bevel ferrous and non-ferrous materials and excels in beveling high tensile strength materials up to 450,000 PSI.

Root face dimensions remain accurate and repeatable from plate to plate, promoting better fit-up and consistent weld geometry. The milled finish is produced without thermal distortion and is ready to weld without additional grinding to remove dross, slag or heat affected zone (HAZ).

The ABM50 employs a unique trolley system which allows the machine to quickly invert and bevel the bottom side of the plate – eliminating the need to flip the material – improving operational safety and increasing productivity. The trolley system also features vertical height adjustment and floating compensation for uneven floors.

A BREAKTHROUGH IN BEVELING!

The operator can easily pre-set and adjust the following parameters:

- bevel angle
- bevel width
- bevel depth
- optimal depth of cut for each pass
- spindle speed
- travel speed
- spindle load

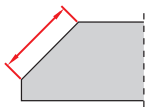

Bevel width
up to 2” (50 mm) / 45°
up to 2-5/8” (66 mm) / 15°

Bevel angles
top 15° - 60°
bottom 15° - 60°

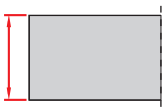

Min plate thickness 5/16” (8 mm)
Max plate thickness 3-1/8” (80 mm)

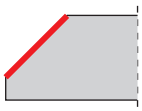

Top beveling

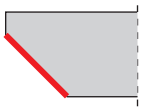

Bottom beveling

PLATE BEVELING MACHINE FROM STEELMAX®

FEATURES

- Self-feeding for consistent bevel geometry from end-to-end
- Real-time measurement and on-screen display of exact bevel geometry and milling parameters
- Variable spindle speed for milling ferrous and non-ferrous materials including high tensile strength materials
- 180° inversion allows for quick and easy creation of double-sided bevels.
- Rotary milling head with carbide inserts produces an accurate, high-quality finish without thermal distortion that is weld ready
- Built-in overload protection
- Floating trolley compensates for uneven floors
- Portable Machine that can easily be moved throughout the shop

The ABM50 features a unique remote pendant control with LCD display showing the exact bevel geometry being produced.

The ABM50 creates bevels with a maximum bevel width of 2″ (50 mm) at 45 degrees.

PLATE BEVELING MACHINE FROM STEELMAX®

ABM50 Technical Specifications	
Voltage	380 - 480V 3 Phase 50-60Hz Switchable Voltage
Power	8.7 HP (6.5 kW)
Spindle Speed (no load)	300-800 RPM
Feed Speed	0"-47" ipm
Bevel Angle (β, Fig. 1)	15°-60° infinitely variable
Maximum Bevel Width (b, Fig. 1)	Varies with angle setting 2-5/8" (66 mm) at 15° 2" (50 mm) at 45°
Minimum Plate Dimensions	24" long x 10" wide
Maximum Depth of Cut per pass (d, Fig. 1)	1/4" (6 mm)
Plate Thickness Range	5/16" - 3-1/8" (8 -80 mm)
Weight	700 Lbs (320 Kg)
Part Number	SM-ABM50

ABM50 Bevel Capacities (Fig. 1)		
β	b	# of passes
15°	2.60" (66 mm)	Recommended in 4 passes
20°	2.32" (59 mm)	Recommended in 4 passes
25°	2.16" (55 mm)	Recommended in 4 passes
30°	2.05" (52 mm)	Recommended in 5 passes
35°	2.00" (50 mm)	Recommended in 5 passes
40°	2.00" (50 mm)	Recommended in 5 passes
45°	2.00" (50 mm)	Recommended in 5 passes
50°	2.00" (50 mm)	Recommended in 5 passes
55°	2.00" (50 mm)	Recommended in 5 passes
60°	2.00" (50 mm)	Recommended in 5 passes

Fig. 1

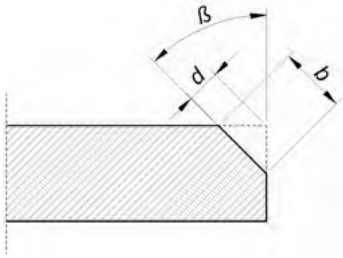

ACCESSORIES:

Cutting insert 1 piece
(8 required)
Item number: SM-PLY-000282

Milling head
(8 cutting inserts required)
Product code: SM-GLW-000053

Cutting Insert for High Tensile Strength Material
Product Code: SM-PLY-000591

STANDARD KIT INCLUDES:

- Beveling machine with milling head and 8 cutting inserts
- Wooden box with base and mounting brackets
- Special wrench
- 10 mm T-handle hex wrench with ball tip
- 3.5 mm hex wrench
- T15 torx screwdriver
- Grease for screws
- Operator's manual

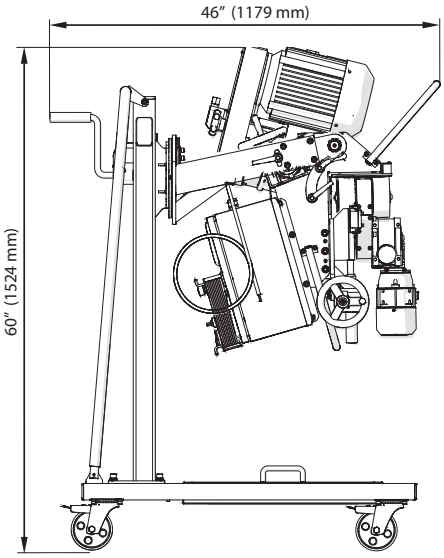

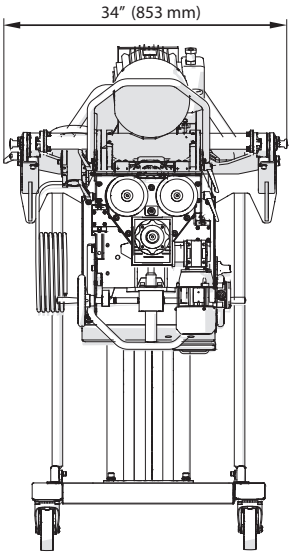

Steelmax®
The tools of innovation.

ABM50 09/2019 All information is subject to change without notice. ©2019 STEELMAX

PLATE BEVELING MACHINE FROM STEELMAX®

The ABM50 can create double-sided bevels eliminating the need to flip the material – improving safety and

The remote pendant allows the operator to optimally adjust spindle and travel speeds for beveling ferrous and non-ferrous materials – up to 450,00 psi tensile strength.

SBM500 STATIONARY BEVELING MACHINE

SELF FEEDING MACHNE QUICKLY BEVELS SMALL PARTS

The Steelmax SBM500 is a robust and efficient solution for beveling and deburring steel plate, angle, square/rectangular tubing and pipe. With its high-speed rotary milling head and variable auto feed, the SBM 500 produces accurately milled weld preparations, improves welding efficiency and reduces costs. Machined bevel angles are accurate and consistent, making plate and root gap fit-up extremely precise and easy. Accurate weld preparation reduces over welding, defect repair, production time, significantly reducing production costs.

FEATURES

- Powerful 7,500 Watt electric motor for continuous operation
- Variable milling head and auto-feed speeds to optimally bevel both ferrous and non-ferrous materials
- Continuously adjustable bevel angle from 15 to 60 degrees
- Simple depth of cut adjustment
- High-speed rotary milling head with 10 replaceable carbide inserts produces a clean, milled surface free of thermal distortion with no heat affected zone
- Multiple cutting insert designs for optimal performance on different materials
- Versatile table top operation permits hand feeding of small plates, square/rectangular tubing, pipe, angle iron and round stock
- Optional table extensions accommodate longer material
- Produces bevel widths up to 1-3/16” (30 mm)
- Plate thickness up to 4” (100 mm)

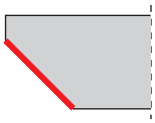

Edge Beveling

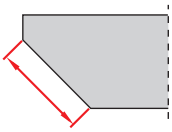

Bevel width up to 1-3/16” (30 mm)

Bevel angles 15° - 60° continuous adjustment

Workpiece height from 1/8” (3 mm) up to 4” (100 mm)

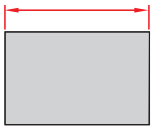

Min. workpiece width 2” (50 mm)
Min. workpiece width 1-3/16” (30 mm) (option)
Min. workpiece length 6” (150 mm)

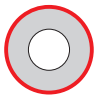

Pipe OD beveling from 2” (50 mm) up to 6” (150 mm) (option)

SBM500 Technical Specifications	
Power	7500 W
Spindle Speed	500 - 2920 RPM
Feed Rate	0.5 - 10 feet/min (0.2 - 3.3 m/min)
Bevel Angle Range (β, Figure 1)	15° - 60°
Maximum Bevel Width (b, Figure 1)	1-3/16" (30 mm)
Maximum Bevel Depth Per Pass (d, Figure 1)	1/4" (6 mm)
Minimum Plate Length	6" (150 mm)
Minimum Plate Width - Standard *With optional accessory*	2" (50 mm) 1-3/16" (30 mm)
Plate Thickness Range	3/16" - 4" (5 - 100 mm)
Maximum Material Weight	220 lbs (100 Kg)
Round Stock Range	2" - 6" (50 -150 mm)
Maximum Square/Rectangular Tubing Dimensions	4" x 4" (100 x 100 mm)
Minimum Angle Profile	2" x 2" (50 x 50 mm)
Voltage	480V, 3 Phase, 50/60 Hz
Weight	1,910 lbs (865 Kg)
Part Number	**SM-SBM500**

High-quality bevel results

Easily machine various materials

Auxiliary tables to accommodate long workpieces

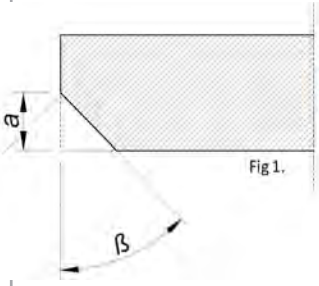

Fig 1.

Maximum Bevel Height Capacity (a in mm) at Various Bevel Angles (β)

β	15	20	25	30	35	40	45	50	55	60
a*	33	30	30	28	26	24	22	20	17	15

*Bevel Height Achieved with Graduated Stepped Passes

OD pipe beveling

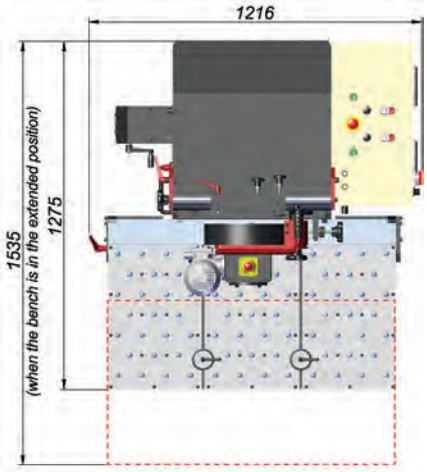

STANDARD SET INCLUDES:

- SBM500
- Set of Tools
- Operator's Manual (English)

ACCESSORIES:

- SM-GLW-000030 - Milling head
- SM-PLY-000396 - Cutting insert for steel (10 pcs required)
- SM-PLY-000408 - Cutting insert for aluminum (10 pcs required)
- SM-PLY-000397 - Cutting insert for Stainless Steel (10 pcs required)

SM-STL-0573-35-00-00-0 Auxiliary table for long workpieces

SM-PRK-0573-36-00-00-0 Pipe beveling attachment for pipes 2-6" (50-150 mm) OD

SM-PRK-0573-38-00-00-0 Narrow plate attachment for 1-3/16" to 2" (30 - 50 mm) wide plates. Minimum plate thickness 7/16" (11 mm)

All information is subject to change without notice.

©2018 STEELMAX

PB5 ID MOUNTED BEVELING MACHINE

RAPIDLY PRODUCE ACCURATE WELD PREPARATION FOR TUBE, PIPE AND BOILER REPAIR

Eliminate laborious hand grinding, poor fit-up, weld defects and over welding with this in-line machining tool!

Extremely productive when full penetration welding is required, the Steelmax PB5 will produce accurate weld preparation within seconds. Creating highly repeatable and consistent fit-up, this tool dramatically reduces cycle times and improves work flow. By utilizing a self-centering mandrel which mounts internally to the open end of the tube or pipe, the PB5 can be rapidly deployed from one pipe to another.

Available with a pneumatic or electric motor, the PB5 can be mounted in pipe or tubing with a minimum inside diameter of 1.25" (32 mm) and can bevel outside diameters up to 4.5" (114 mm). Designed with three tool holders, the PB5 will simultaneously perform three different machining operations milling the OD Bevel, Root Face and an I.D. counterbore to create consistent wall thickness around the joint and ensure complete weld penetration.

Optional Accessories include:

- An extension set to accommodate pipe or tubing up to 5 ½" (140 mm) O.D.
- Boiler Repair Kit for working on water walls and in restricted spaces.

FEATURES

- Bevel, face and ID counterbore the pipe or tubing simultaneously
- Available with pneumatic or electric motor options
- Variety of tool bits available for creating various bevel angles for V and J grove preparation
- Self-Centering ID Mounted Mandrel

Steelmax®
The tools of innovation.

PB5 PIPE BEVELING MACHINE

PB5-E / PB5-P Technical Specifications		
	PB5-E	PB5-P
Motor Drive	Electric	Pneumatic
Motor Power	1,100 Watts	800 Watts
Speed Range	0-300 RPM	90 RPM
Power Supply Options	110-120V/50-60 Hz or 220-240V/50-60 Hz	NA
Air Requirements	NA	56.5 CFM (1600 L/min) / 87 PSI (0.6 Mpa)
Operating Weight (with Motor)	24 lbs (11 kg)	22 lbs (10 kg)
Min/Max Pipe Sizes (Min ID/Max OD) - Standard Mandrel	1.26" ID/4.49" OD (32 mm ID/114 mm OD)	
Min/Max Pipe Sizes (Min ID/Max ID) - Small Mandrel	1" ID/1.25 ID (25mm ID/33mm ID)	
Min/Max Pipe Sizes (Min OD/Max OD) - Large Spindle Disc	4.5" OD/5.5" OD (114mm OD/140mm OD)	

Maximum Allowable Pipe Schedule										
Nominal Pipe Diameter	1"	1 1/4"	1 1/2"	2"	2 1/2"	3"	3 1/2"	4"	4 1/2"	5"
Maximum Pipe Schedule	SCH 40S/40/STD	SCH 80/80XS	SCH 160	XXS	SCH 160	SCH 160	SCH 80/80XS	SCH 120	SCH 40S/40/STD*	SCH 40S/40/STD*

** Requires optional 5 1/2" (140 mm) spindle disk set.*

Maximum Allowable Pipe/Tube Wall Thickness					
Pipe/Tube Size Range	1" - 1.25" ID	1.25" ID to 4.5" OD	4.5" - 5" OD*	5" - 5.2" OD*	5.2" - 5.5" OD*
	(25 mm to 33mm ID)	(32 mm ID to 114 mm OD)	(114 mm to 124 mm OD)	(124 mm to 132 mm OD)	(132 mm to 140 mm OD)
Maximum Wall Thickness	0.5" (12 mm)	0.5" (12 mm)	0.39" (10 mm)	0.31" (8 mm)	0.24" (6 mm)

** Requires optional 5 1/2" (140 mm) spindle disk set.*

Dimensions

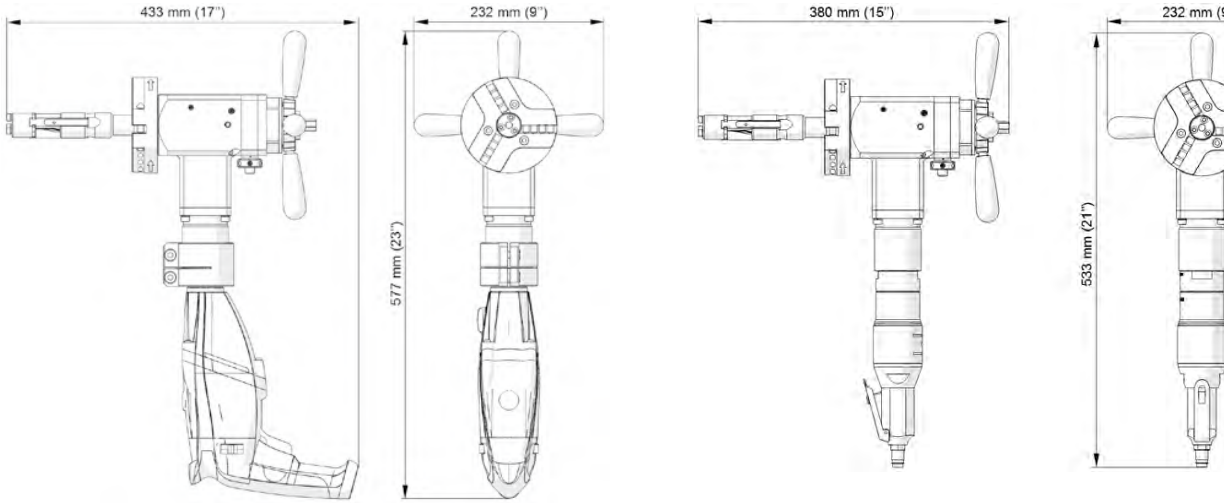

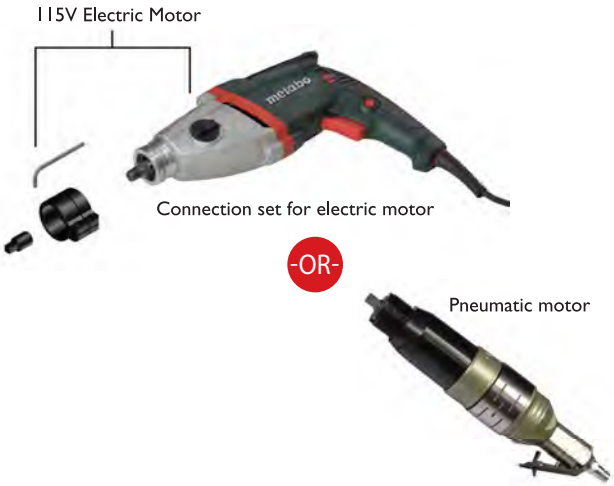

All information is subject to change without notice.

PORTABLE BEVELING MACHINE FROM STEELMAX®

SM-NOZ-000031	F0-30 0° facing tool bit	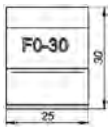
SM-NOZ-000032	B30 30° bevelling tool bit*	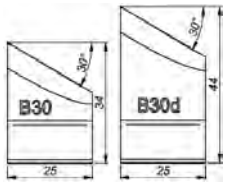
SM-NOZ-000033	B30d 30° bevelling tool bit**	
SM-NOZ-000036	B375 37.5° bevelling tool bit*	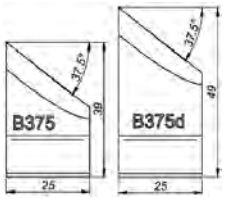
SM-NOZ-000037	B375d 37.5° bevelling tool bit**	
SM-NOZ-000040	B45 45° bevelling tool bit*	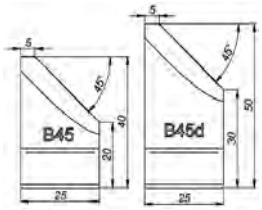
SM-NOZ-000041	B45d 45° bevelling tool bit**	

For pipe diameters between 2.2" and 3.26" (56 mm and 83 mm), both long and short beveling tool bits can be used in conjunction with 0 degree facing tool bit.

* For pipe diameters over 2.2" (56 mm), short beveling tool bit must be used in conjunction with 0° facing tool bit

** For pipe diameters under 3.26" (83 mm), long beveling tool bit must be used in conjunction with 0° facing tool bit

SM-NOZ-000052	IC15-40 15° internal counterbore tool bit	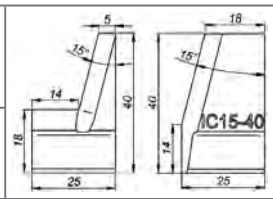
SM-NOZ-000053	IC15-40 15° internal counterbore tool bit – for diameters over 2.2" (56 mm)	
SM-NOZ-000058	J10-R6 10° J-bevelling tool bit	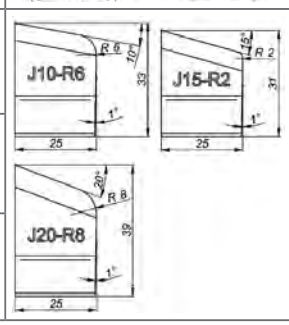
SM-NOZ-000057	J15-R2 15° J-bevelling tool bit	
SM-NOZ-000059	J20-R8 20° J-bevelling tool bit	

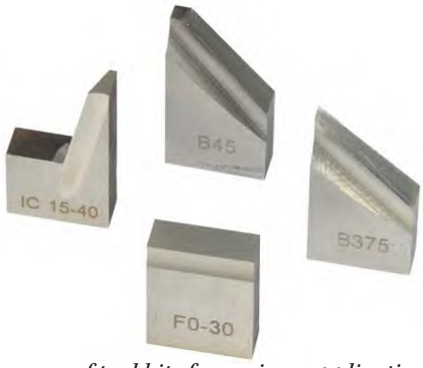

Wide range of tool bits for various applications.

When using 0° facing tool bit in conjunction with beveling tool bit, either long or short beveling tool bit is used depending on pipe diameter.

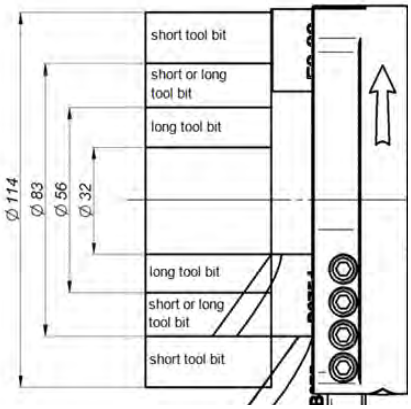

Steelmax®
The tools of innovation.

Optional Accessories

Boiler Repair Accessories – *For work on water walls and restricted spaces.*

75 mm spindle disc
SM-PB5-TRC-0472-12-00-00-0

Minimum distance between tubes is 75mm (2.95")

Ratchet wrench
SM-PB5-KLC-000045

Extension set for OD Ø up to 5.5" (140 mm) including 140 mm spindle disc and jaw blocks (7, 8, 9) – 3 sets
SM-PB5-ZST-0472-15-00-00-0

Additional Equipment

Item	Description
SM-PB5-BE 1100	PB5 Electric Motor 115V
SM-PB5-SLN-000176	PB5 Electric Motor 230V
SM-PB5-ZST-0472-11-00-00-1	PB5 Clamping Ring Set for Electric Motor
SM-PB5-KLC-000045	PB5 Ratchet Wrench
SM-PB5-NPD-0472-03-00-00-0	PB5 Pneumatic Motor
SM-PB5-TRC-0472-12-00-00-0	PB5 Spindle Disk
SM-PB5-UKS-0472-10-00-00-0	PB5 Beveling Head Unit
SM-PB5-ZST-0472-15-00-00-0	PB5 Extension Block Set
SM-PB5-TRZ-0472-21-00-00-0	PB5 Small Mandrel

PB5 Small
Expanding Mandrel
(1" - 1-1/4" ID)

Steelmax®
The tools of innovation.

©2019 STEELMAX

PB10 PIPE BEVELING MACHINE

WIDEST SINGLE MACHINE PIPE DIAMETER RANGE AVAILABLE

The Steelmax PB10 pipe beveling machine is designed for portable use in pipe machining operations. It can be used efficiently by a single operator. It is a heavy-duty I.D. mounted pipe beveler. Self-centering expandable mandrels provide quick and proper alignment to a pipe or a tube prior to machining operations.

The PB10 is able to bevel, face off, chamfer and counterbore, making all these weld prep operations quick and simple.

Depending on users preferences and site conditions, the PB10 machine can be operated with a high-quality powerful pneumatic motor or a high-torque electric motor.

FEATURES

- Bevel, face off and counterbore simultaneously
- Standard and custom made tool bits available
- Available in pneumatic or electric versions
- J-Bevel tools available for high welding efficiency

Pneumatic: SM-PB10

Electric: SM-PBE10

Steelmax®
The tools of innovation.

PB10 Technical Specifications	
Pipe machining range	Min I.D. – 1.6" (40 mm) Max I.D. – 10-9/16" (269 mm) Wall thickness: up to .60" (15 mm) Minimum Pipe Length: 7-1/2" (190 mm)
Part number	**SM-PB10**
Pneumatic motor	1500W 2.0 HP
Power requirements	1750 l/min (61.7 cfm) at 630 kpa (90 psi)
Headstock speed range	5 to 18 rpm
Part number	**SM-PBE10**
Electric motor	1800W
Supply	115V/60Hz or 230V/50Hz
Headstock speed range	14 to 32 rpm

All information is subject to change without notice.

Pneumatic: SM-PB10

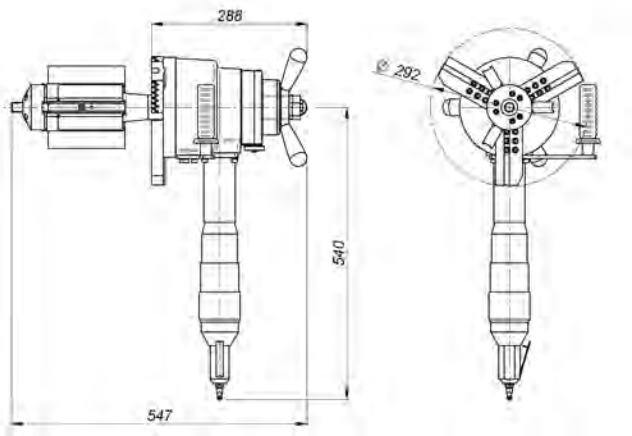

Electric: SM-PBE10

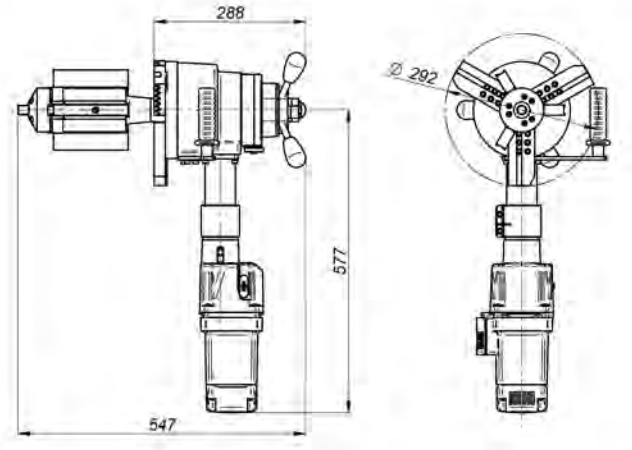

PART NUMBERS & TOOL BITS CODES

SM-NOZ-000019	30° Beveling tool bit, height 1.5" (37 mm)
SM-NOZ-000018	30° Beveling tool bit, height 1.7" (44 mm)
SM-NOZ-000020	37.5° Beveling tool bit, height 1.7" (44 mm)
SM-NOZ-000015	37.5° Beveling tool bit, height 2.1" (54 mm)
SM-NOZ-000021	45° Beveling tool bit, height 2.1" (54 mm)
SM-NOZ-000017	0° Facing tool bit, height 1.2" (30 mm)
SM-NOZ-000023	30° Internal beveling tool bit, height 1.7" (44 mm)
SM-NOZ-000025	30° Internal beveling tool bit, height 2.1" (54 mm)
SM-NOZ-000024	37.5° Internal beveling tool bit, height 2.1" (54 mm)
SM-NOZ-000026	45° Internal beveling tool bit, height 2.1" (54 mm)
SM-NOZ-000001	15° Internal calibration tool bit, height 2.2" (55 mm)
SM-NOZ-000022	15° J-beveling tool bit, height 50mm, radius 0.08" (2 mm)
SM-NOZ-000016	20° J-beveling tool bit, height 50mm, radius 0.31" (8 mm)

Standard shipping set:

- PB10 (without tool bits)
- Wooden crate
- Set of jaws and blocks
- Set of adjustment tools
- Coolant container
- Operator's manual
- Self-centering expandable Mandrel for pipe I.D. Ø 3-5/16 – 10-9/16" (84 – 269 mm) **SM-ZSP-0200-04-00-00-1**

Beveling Tool Bits

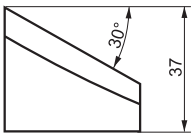

B30/37

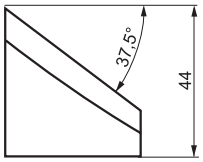

B375/44

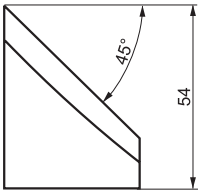

B45/54

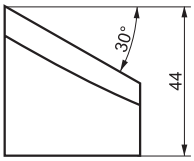

B30/44

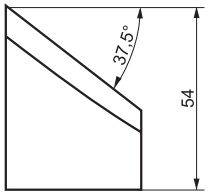

B375/54

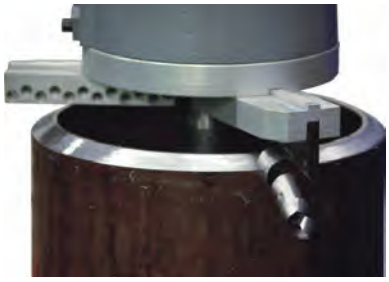

Internal Beveling Tool Bits

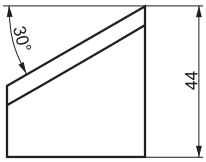

IB30/44

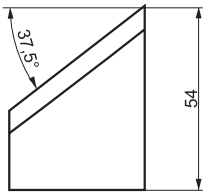

IB375/54

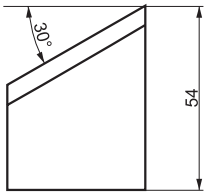

IB30/54

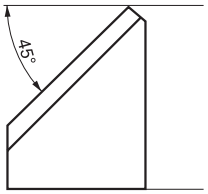

IB45/54

PORTABLE BEVELING MACHINE FROM STEELMAX®

J-Beveling Tool Bits

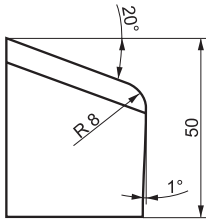

J20/50/R8

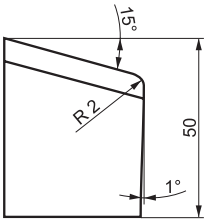

J15/50/R2

ID Chamfer Tool Bit

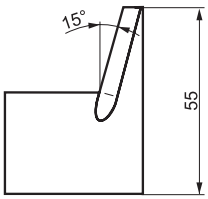

IC15/55

Facing Tool Bit

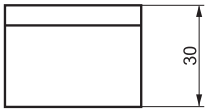

F0/30

Custom made versions of toolbits are available on request.

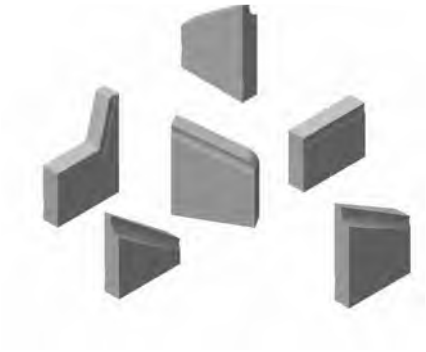

Additional Equipment:

SM-PRK-0447-00-00-00-2	Flange facing attachment with cutting capacities 3-9/16" to 20" (90 - 508 mm), delivered in a metal box
SM-PRK-0463-00-00-00-1	Out of round attachment set includes large mandrel for pipe ID Ø 5" to 11-5/8" (126 - 296 mm), delivered in a metal box
SM-ZSP-0200-05-00-00-2	Self-centering expandable Mandrel for pipe I.D. Ø 1-1/2 – 3-3/8" (38 – 86 mm)
SM-ZST-0200-13-00-00-2	Extension set for ID Ø up to 14" (355 mm) includes 3 steel tool holders and jaws 7-12, delivered in metal box
SM-ZST-0200-12-00-00-0	Electric motor set 230V
SM-ZST-0200-12-00-00-1	Electric motor set 115V US plug
SM-ZSP-0200-03-00-00-0	Air Motor Assembly

Steelmax®

The tools of innovation.

All information is subject to change without notice.

©2019 STEELMAX

MPB32 Pro & APB32 Pro PIPE BEVELING SYSTEMS

MANUAL & AUTOMATIC SYSTEMS PRODUCE ACCURATE WELD PREPARATIONS IN A SINGLE PASS

The Steelmax MPB32 Pro and APB32 Pro pipe beveling systems produce consistent, high-quality weld preparations in a single pass. With manual or automatic feed, the MPB32 Pro and APB32 Pro easily mount to the outside edge of pipe or tubing and can create a 13/16” maximum bevel width. By attaching to the pipe’s circumference, the MPB32 Pro and APB32 Pro automatically compensate for out-of-round pipe and tubing and produce a consistent land dimension and bevel angle around the pipe; giving the user highly repeatable and consistent fit-up. Outfitted with a heavy-duty, industrial motor with variable speed control, the MPB32 Pro and APB32 Pro turn at the optimal speed for efficient beveling of ferrous and non-ferrous pipes.

The MPB32 Pro is a manually operated machine while the APB32 Pro automatically feeds itself around the pipe. Both machines can mount to pipe or tubing with a minimum diameter of 10” and can bevel outside diameters up to 32” and 1/8” up to 3/4” wall thicknesses. With an optional attachment, both the MPB32 Pro and APB32 Pro can bevel pipe of any diameter over 32” making this an incredibly versatile solution.

MPB32 Pro MANUAL PIPE BEVELING MACHINE

APB32 Pro AUTOMATIC PIPE BEVELING MACHINE

FEATURES

- Simple set-up and operation
- Accurate bevel depth and bevel angle adjustment
- Complete weld preparation in a single pass (at 45°, maximum 15 mm bevel width)
- Suitable for pipe thickness from 1/8" (3 mm) up to 3/4" (20 mm)
- Both machines can be used to bevel plate as well
- Variable speed motor for optimized milling of various materials

Steelmax®
The tools of innovation.

PORTABLE PIPE BEVELING MACHINES FROM STEELMAX®

Technical Specifications		
	MPB-32 Pro	**APB-32 Pro**
Power Supply	115 VAC 60Hz 2,400W	115 VAC 60Hz 2,400W
Pipe Diameter Range	10" and Larger (>250 mm)	10" and Larger (>250 mm)
Bevel Angle Range	15-45°	15-45°
Maximum Bevel Depth @ 45 degrees (A)	5/8" (15 mm)	5/8" (15 mm)
Maximum Bevel Width (B)	13/16" (21 mm)	13/16" (21 mm)
Minimum Pipe Wall Thickness	1/8" (3 mm)	1/8" (3 mm)
Maximum Pipe Wall Thickness	3/4" (20 mm)	3/4" (20 mm)
Weight	41 lbs (18.6 kg)	90 lbs (41 kg)
Part Number	SM-PB-MPB-32-PRO	SM-PB-APB-32-PRO

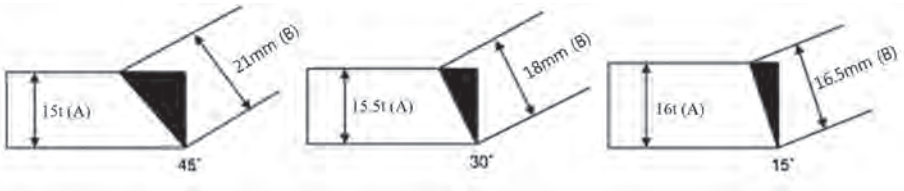

Accessories

SM-PB-AP1020-LD	APB-32 Pro Pipe Attachment for Pipe Diameters Above 32"

Spare & Wearing Parts

SM-PB-CP2100-CA	Cutter Head Assembly for APB-32 Pro and MPB-32 Pro (without inserts)
SM-PB-CM2100-10	Cutting inserts (Package of 10)
SM-PB-CP2100-09	Cutter Wedge for APB-32 Pro and MPB-32 Pro (each)
SM-PB-CP2100-08	Cutter Insert Screw (each)

Remote pendant for automatic feed for APB32 Pro

Steelmax®

The tools of innovation.

HIGH-SPEED PIPE BEVELING SYSTEM FROM STEELMAX®

PBM 1000 PIPE BEVELING MACHINE

PRODUCE EFFICIENT AND ACCURATE WELD PREPARATION WITH HIGH-SPEED ROTARY MILLING HEAD WITH REPLACEABLE CUTTING INSERTS FOR LONG-TERM PERFORMANCE

The Steelmax PBM 1000 is designed for beveling and facing pipes, tanks or tubes with diameters ranging from 8" – 40" (200 mm - 1000 mm). It is capable of machining bevel widths up to 1-3/4" (45 mm) within a range of angles from 0° – 60°. An exclusive "J" groove beveling attachment is also available. With its high-speed rotary milling head, PBM 1000 produces accurate bevels in a fraction of the time required by traditional single point machining. This saves time and money and improves accuracy.

FEATURES

- Bevel pipe between 8" - 40" diameter
- High-speed rotary milling head with replaceable inserts
- Adjustable bevel angle between 0° - 60°
- J-groove beveling option
- 11-ton capacity
- Powerful 230 Volt 3 PH Motor

Stainless Steel machining is now possible.

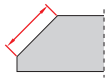

Max bevel width 1-3/4"

Min. wall thickness 1/4"

Bevel angle from 0° to 60°

Pipe OD 8"-40"

Facing

Pipe OD beveling

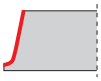

Pipe J-groove beveling

Steelmax®

The tools of innovation.

HIGH-SPEED PIPE BEVELING SYSTEM FROM STEELMAX®

PBM 1000 TECHNICAL SPECIFICATION	
Power supply	1~ 208–230 V, 50/60 Hz 3~ 208–230 V, 50/60 Hz
External pipe diameter range	8"– 40" (200-1000 mm) pipes longer than 830 mm; 8"– 23-5/8" (200-600 mm) pipes of 15-3/4" – 31-11/16" (400-830 mm) length
Maximum allowed pipe weight	13,200 lbs. (6000 kgs) with standard rollers. Up to 22,000 lbs. (10,000 kgs) with optional steel rollers
Min. pipe thickness	3/16" (5 mm)
Pipe fixing	mechanical with chain
Feed rate	4" – 43-5/16" (100-1100 mm/min)
Beveling angle range	0-60°degree continuous angle adjustment
Max OD bevel width	1-3/4" (45 mm)
Beveling type "J"	YES - option
"J" type beveling radius	0.24" (6 mm) or 0.31" (8 mm)

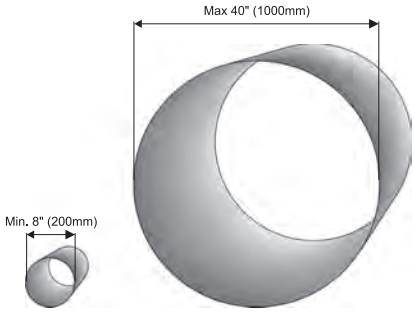

Range of diameters from 8" up to 40" (200-1000mm)

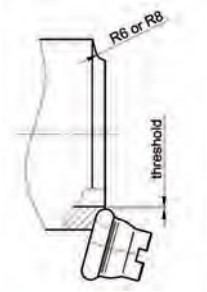

R6 & R8 J-groove available with optional milling heads

Accessories and optional equipment

- SM-GLW-000013 Standard Milling head (7 inserts required)
- SM-PLY-000282 Cutting inserts for beveling
- SM-GLW-000014 J-groove R6 milling head (6 inserts R6 required)
- SM-PLY-000198 Cutting insert for J-groove R6 end preparation
- SM-GLW-000015 J-groove R8 milling head (5 inserts R8 required)
- SM-PLY-000201 Cutting insert for J-groove R8 end preparation
- SM-ZST-0436-25-00-00-0 Stainless Steel Set
- SM-WSP-0436-24-00-00-0 Oval Pipe Tracking Attachment

Clamping device for short pipes of 15-3/4" – 32-11/16" length

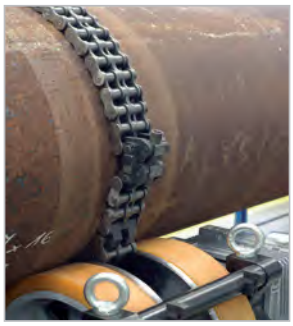
Adjustable chain (ø 8" – 40") ensures positive axial rotation

User-friendly control panel

Optional heavy-duty pipe support with 11-ton capacity

Shields and internal lighting increase safety and comfort of the operator

Optional Oval Pipe Tracking Attachment allows out of round pipe beveling

Steelmax®
The tools of innovation.

All information is subject to change without notice.
©2019 STEELMAX

MAX LIFTER LIFTING MAGNETS

FLAT OR ROUND MATERIAL HANDLING

The Steelmax Max Lifter series of magnets are compact, self-contained lifting magnets that use permanent magnets to maintain holding power indefinitely. Because they require no electric power, they can be used where electric power is not readily available and free of the restriction of power cords.

Max Lifter magnets are safe and efficient. The magnets lift, transport and release the load rapidly with the simple motion of a lever in a single operation. Once activated, a spring-loaded device blocks the engagement lever preventing any accidental deactivation. Each Max Lifter magnet is tested at three times the recommended load.

Max Lifter magnets are robust and reliable. The rotor, the only moving part, has its fulcrum on ball bearings and doesn't make any physical contact during rotation. All steel parts are nickel coated to prevent rust formation and improve component life. Max Lifter magnets will operate "maintenance free" over long periods of time.

FEATURES

- Available in 550lbs, 1100lbs, 2200lbs, 4400lbs (250kg, 500kg, 1000kg, 2000 kg) lifting capacity
- Self-contained, permanent magnet
- No electrical power required
- Substantial weight capacity safety factor
- Self-locking safety block prevents accidental deactivation
- Intelligent magnet design activates magnet only when there is sufficient holding power
- Mono block, rust-proof nickel-coated design
- Maintenance free

Steelmax®
The tools of innovation.

Activation and Deactivation Phases

The simplicity of a single move.

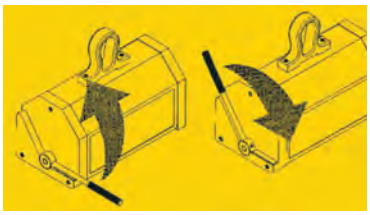

Simply turning the handle, the Max Lifter is activated or deactivated. A self-locking device prevents any possible accidental deactivation of the handle when in the MAG position.

Load Characteristic Plate

Part number	Model	Max load lb	Max load kg	Min thickness in	Min thickness mm	Max length in	Max length mm
SM-ML125	Max Lifter 125	275	125	3/4	20	39	1000
SM-ML250	Max Lifter 250	550	250	3/4	20	59	1500
SM-ML500	Max Lifter 500	1100	500	1	25	78	2000
SM-ML1000	Max Lifter 1000	2200	1000	1-1/2	40	118	3000
SM-ML2000	Max Lifter 2000	4400	2000	2	55	118	3000

Load Characteristic Round Stock

Part number	Model	Max load lb	Max load kg	Min thickness in	Min thickness mm	Max length in	Max length mm	Max diameter in	Max diameter mm
SM-ML125	Max Lifter 125	110	50	3/8	10	39	1000	12	300
SM-ML250	Max Lifter 250	220	100	3/8	10	59	1500	12	300
SM-ML500	Max Lifter 500	440	200	9/16	15	78	2000	16	400
SM-ML1000	Max Lifter 1000	880	400	1	25	118	3000	18	450
SM-ML2000	Max Lifter 2000	1760	800	1-3/8	35	118	3000	24	600

Technical Data

Part number	Model	Weight lb	Weight kg	Length in	Length mm	Width in	Width mm	Height in	Height mm
SM-ML125	Max Lifter 125	8.1	3.7	4.8	122	3	79	5.6	142
SM-ML250	Max Lifter 250	14.3	6.4	7.4	189	3	79	5.6	142
SM-ML500	Max Lifter 500	33	15	9.8	249	4.2	106	7.4	189
SM-ML1000	Max Lifter 1000	71.6	32.5	13.4	342	5.25	133	8.6	219
SM-ML2000	Max Lifter 2000	167.5	76	18	457	6.5	166	11.5	293

Other sizes and applications available on special order.

Steelmax®

The tools of innovation.

All information is subject to change without notice.

©2019 STEELMAX

MAX LIFTER THIN GAUGE MAGNETS

SAFE, EFFICIENT HANDLING OF THIN STEEL IN FLAT OR ROUND CONFIGURATIONS

The Steelmax Max Lifter TG series are the ideal solution for handling thin steel on any jobsite and operate maintenacne free over long periods of time.

The Max Lifter TG has been meticulously designed to handle the needs inherit in working with thin steel. Our engineering has created a special design of the polar surface that when coupled with a delicate balancing of magnetic weight in the stator and rotor creates concentrated magnetic flux in a closer distance. This means more magnetic force in a much smaller area and more strength for handling thin steel. Like the standard Max Lifter line the magnets are safe and efficient and require no electrcity. The magnets lift, transport and release the load rapidly with the simple motion of a lever using a single operator. Once activated, a spring-loaded device blocks the maneuvering lever preventing any accidental deactivation. The Max Lfiter TG maintains uniform magnetic strength over the entire contact area.

FEATURES

- Available in 2 Models 330, 660 lbs (150, 300, kg) lifting capacity
- High power rare earth magnets
- No electrical power required
- Special treatment on all surfaces for corrosion & wear protection
- Intelligent magnet design
  activates magnet only when there is sufficient holding power
- Mono block, rust-proof nickel-coated design
- Maintenance free

SM-ML300-TG

SM-ML150-TG

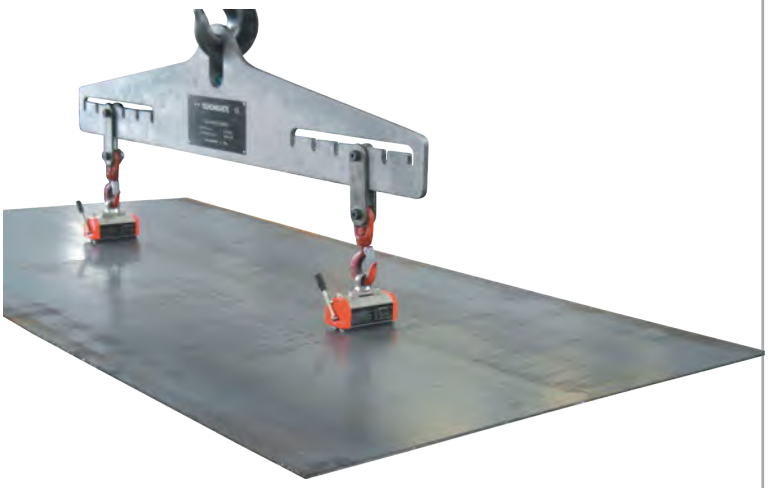

Activation and Deactivation Phases

The simplicity of a single move.

Simply turning the handle, the Max Lifter TG is activated or deactivated. A self-locking device prevents any possible accidental deactivation of the handle when in the MAG position.

Load Characteristic					
	Model	Max Load	Min. Thickness	Max Length	Max Diameter
Plate	ML150-TG	330 lbs (150kg)	8mm	59" (1500mm)	NA
	ML300-TG	660 lbs (300kg)	10mm	78" (2000mm)	NA
Round	ML150-TG	132 lbs (60kg)	8mm	59"(1500mm)	9.4" (240mm)
	ML300-TG	264 lbs (120kg)	10mm	78"(2000mm)	11.4" (290mm)

TORCH RUNNER TRACK CUTTING MACHINE

DIGITAL CONTROL PRODUCES ACCURATE HIGH-QUALITY CUTS AND BEVELS

The Steelmax® Torch Runner is a state-of-the-art, digitally controlled track torch which maintains precise and stable travel speeds that produce accurate cuts and bevels with oxy-fuel or plasma. The machine can be used on any standard 6" V-grooved track. Plate cutting and weld preparation can now be done with a high degree of precision. Quality cuts and bevels produced with Torch Runner reduce fit-up and grinding time and lay the foundation for a high quality weld.

The Torch Runner is available in two versions: a standard version for oxy-fuel cutting applications (up to 59 ipm) and a high-speed version for plasma cutting applications (up to 118 ipm).

FEATURES

- 1-3/8" (35 mm) Machine Barrel Torch Holder with precise angle setting up to 45 degrees
- Rigid heat-proof design
- Advanced Speed Control with electronic closed loop feedback for stable speed regulation
- LED Display with readout of actual and preset speed
- Two-wheel drive with braking
- Free wheel clutch system features rapid disengagement of drive mechanism for repositioning
- Interconnecting rails for long cuts and bevels
- Optional gas manifolds for two or three hose torches
- Optional circle cutting attachment

Steelmax®
The tools of innovation.

TORCH RUNNER FROM STEELMAX®

Torch Runner Technical Specifications	
Part Number	**SM-WC-TR** or **SM-WC-TR-230** **SM-WC-TR-PLASMA or SM-WC-TR-PLASMA-230**
Power supply	115-230V / 50-60 Hz
Travel Speeds	SM-WC-TR : 0-59 IPM (0-150 CPM) SM-WC-TR-Plasma: 0-118 IPM (0-292 CPM)
Dimensions (LxWxH)	16-13/16" (18-5/8") x 7-7/16" (25-13/16") x 7-1/16" 427 mm (473) x 189 mm (655) x 180 mm
Weight	37 lbs (16.8 kg)

Standard kit includes:

SM-WC-TR:

- Torch Runner drive unit
- Power cord
- Counterweight
- Geared Rack 22.8 (580 mm) long
- Machine barrel torch holder with precise angle adjustment for torch barrel diameter of 1-3/8″ (35 mm) with 32 pitch gear rack

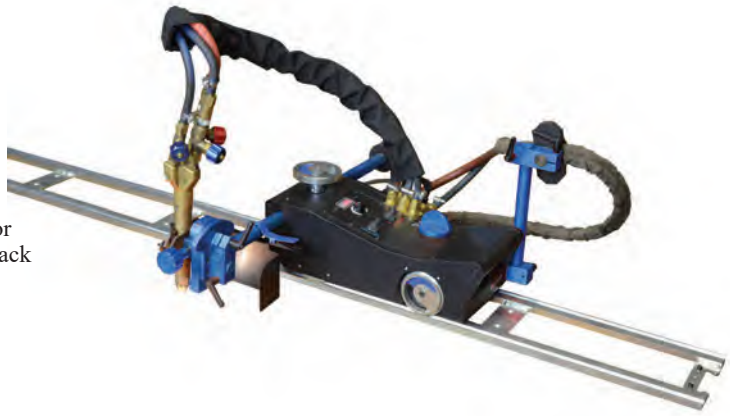

SM-WC-TR-PLASMA:

- Torch Runner drive unit
- Power cord
- Counterweight
- Geared Rack 22.8 (580mm) long
- Trigger contact relay for Plasma
- Cable anchor support
- Torch holder with precise bevel angle settings.

Note: Torch, gas manifold and rail sold separately

TRACK CUTTING MACHINE FROM STEELMAX®

ACCESSORIES:

1. Track Assembly

Track assemblies can interconnect to form various lengths
Track specification: length 72″ (1800 mm), “V” Groove center-line: 6″ (152 mm)
Product Code: SM-TRO-0475-13-00-00-0

2. Standard Gas Manifolds

Standard Gas Manifolds act as strain relief for torch holder and allow for easy connection for gas supply hoses

2 Hose-Gas Manifold – Product Code: SM-RZD-0475-68-00-00-0

3 Hose-Gas Manifold – Product Code: SM-RZD-0475-67-00-00-0

3. Quick Acting Manifolds

Quick Acting Manifolds act as strain relief for the torch holder and permit quick on/off of gas supply.

Quick Action 2 Hose Gas Manifold – Product Code: SM-RZD-0475-70-00-00-0

Quick Action 3x3 Hose Gas Manifold –Product Code: SM-RZD-0475-71-00-00-0

OPTIONAL ACCESSORIES:

4. Standard Torch Holder

Enables torch attachment and rough angle setting for torch barrel diameters from 1-1/8″ to 1-3/8 ″ (28-35 mm).
Product Code: SM-UCW-0475-28-00-00-0

5. Torch Holder with Precise Bevel Angle Setting

Enables torch attachment with precise angle setting and quick up & down adjustment for torch barrel diameters from 1-1/8″ to 1-3/8″ (28-35 mm)
Product Code: SM-UCW-0475-08-00-00-0

6. Machine Barrel Torch Holder with Precise Bevel Angle Setting

Enables machine barrel torch attachment for Machine Barrel Torch with diameter 1-3/8″ (35 mm) with 32-pitch gear
Product Code: SM-UCW-0475-42-00-00-0

7. Machine Barrel Torch Holder

Enables machine barrel torch attachment (quick change of the height and rough angle setting)
Holder diameter 1-3/8″ (35 mm) with 32-pitch gear
Product Code: SM-UCW-0475-29-00-00-0

TORCH RUNNER FROM STEELMAX®

8. Sliding Rack Holder
Sliding rack holder enables various torch holder attachments
Product Code: SM-UCW-0475-15-00-00-0

9. Circle Cutting Attachment
Enables circle cutting with radius between:
9.5″ and 19.5″ (240 and 500 mm)
Product Code: SM-CYR-0475-22-00-00-0

16” and 98” (400-2500 mm)
Product Code: SM-CYR-0475-83-00-00-0

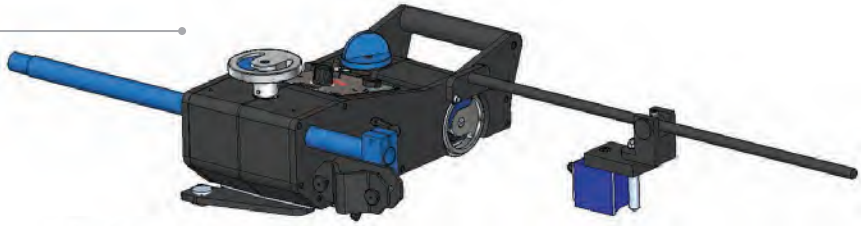

10. Large Counterweight
Product Code: SM-PWG-0475-10-00-00-0

11. 39″ (1000 mm) Geared Rack
Enables extended reach for the torch holder
Product Code: SM-RAM-0475-23-00-00-0

12. Cable Anchor
Anchors power cable and fuel hoses to relieve stress on the torch holder
Product Code: SM-PDT-0475-34-00-00-0

13. Roller Support
Stabilizes carriage and provides constant torch standoff
Product Code: SM-PDT-0475-26-00-00-0

Steelmax®
The tools of innovation.

All information is subject to change without notice.
©2019 STEELMAX

Eco Runner Portable Fillet Welding Carriage

THE POWER TOOL FOR WELDING
COMPACT BATTERY–POWERED TRAVEL WELDING CARRIAGE

The Eco Runner is a battery-powered welding travel carriage designed to produce continuous fillet welds using MIG/MAG torches in the flat or vertical welding positions. Providing mechanized motion of the welding torch, the Eco Runner allows for continuous welding which increases operating factor and weld deposition rates.

A 4-wheel drive system and permanent magnetic base provide powerful traction, smooth travel and stable speeds. A digital speed readout insures repeatability of the weld procedure and produces weld bead geometry that is exact to the required specifications, reducing costly over welding and substantially decreasing filler metal usage.

A quick disconnect torch holder allows the torch to be easily swapped from one side of the Eco Runner to the other, enabling the operator to weld the entire workpiece from end to end.

An optional power supply can be used to plug the carriage into a 115V – 230V power source.

FEATURES

- Compact and lightweight design for welding in narrow spaces
- Convenient 18 V DC battery supply
- Optional 115V – 230V line power supply
- Versatile quick disconnect torch clamp for easy placement of the torch on either side of the carriage
- Digital LED display for pre-setting travel speed
- Low-battery indicator
- Built-in guide rollers

Optional 115–230 V power supply

Easily weld from end to end

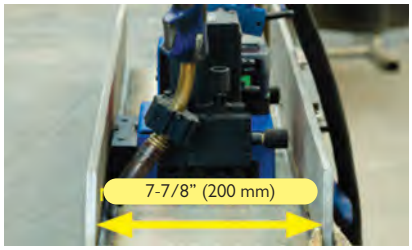

Welding in narrow spaces

Continuous welding

Horizontal speed 0–43 in/min (0–120 cm/min)

Vertical speed 0–43 in/min (0–110 cm/min)

Torch placement on either side

Welding in narrow spaces

Weight 17 lbs (7.6 kg)

Steelmax®

The tools of innovation.

Eco Runner Technical Specifications	
Voltage	18V DC, 5.2Ah 115 -230V, 50-60 Hz (w/ optional power adaptor)
Power	25 Watts
Welding Position	2F & 3F
Torch Diamter Range	5/8" - 7/8" (16 - 22 mm)
Min. Workpiece Thickness	3/16" (4 mm)
Horizontal Pulling Force	34 Lbs
Vertical Pulling Force	22.5 Lbs
Horizontal Speed	0 - 43 in/min (0 - 110 cm/min)
Vertical Speed	0 - 39 in/min (0 - 100 cm/min)
Weight (w/out battery)	22 lbs (7.6 Kg)
Part Number	**SM-WC-ER**

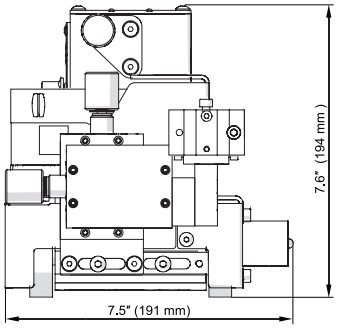

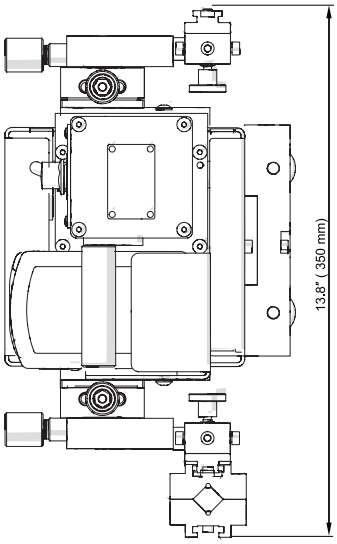

OPTIONAL ACCESSORIES:

Auxiliary magnet blocks
SM-ZST-0655-09-00-00-0

5.2 Ah Battery
SM-WC-LR-BAT

Power supply
SM-ZSL-0526-20-00-00-0

Cable anchor
SM-UCW-0655-08-00-00-0

Battery charger
SM-LDW-000006
(230 V, 50/60 Hz)
SM-WC-LR-CHARGER
(115 V, 50/60 Hz)

Power cord 10 ft (3 m)
SM-PWD-0466-18-00-00-0
(230 V)
SM-PWD-0466-16-00-00-0
(115 V)

Easily place torch on either side of carriage

STANDARD SET INCLUDES:

- Eco Runner Welding Carriage
- Torch holder
- Battery
- 4 mm hex wrench
- 3 mm hex wrench
- Operator's Manual

Battery Charger Sold Separately

Steelmax
The tools of innovation.

ER 09/2019 All information is subject to change without notice. ©2019 STEELMAX

Li'l RUNNER PORTABLE FILLET WELDING CARRIAGE

COMPACT TRACKLESS FILLET WELDING CARRIAGE WITH 4-WHEEL DRIVE MAGNETIC TRACTION

Increase your production and reduce your welding costs with the Li'l Runner Automatic Fillet Welder. By providing constant, non-stop travel at a regulated speed, Li'l Runner produces consistent high-quality welds in a fraction of the time required by hand welding. The regulated travel speed creates weld bead geometry which is exact to your specifications, reducing costly over welding and decreasing filler metal usage by as much as 60%. Li'l Runner will produce quality welds faster and with less cost than hand welding. At just over 17 lbs (8 Kg), this compact, portable tractor can be carried anywhere.

The Li'l Runner is available in two versions: (i) the standard version (up to 86 IPM) which can be used for cutting and welding applications; and (ii) the dual-power version (battery powered with a line power adapter). The Li'l Runner family of carriages offer a broad range of capabilities in one of the smallest fillet welders on the market today.

Li'l Runner by Steelmax

Li'l Runner with flex rail for tank fabrication.

Standard kit includes:

- Li'l Runner drive unit
- Power cord
- Arc control cable
- Guide arm assembly with brass roller wheels

Steelmax®
The tools of innovation.

Li'l RUNNER FROM STEELMAX®

FEATURES

- Compact, lightweight design with durable cast aluminum housing
- Positive magnetic traction permits out of position use
- Magnetic adhesion on/off lever permits easy set up and adjustment on work piece
- Maintenance-free, 4-wheel planetary gear drive system
- Digital LED display for setting travel speed
- Rapid clamp torch holder mechanism for different types of MIG/MAG torches
- Precise cross-slide torch adjustment
- Integrated automatic arc initiation
- Self-guiding roller arms eliminate the need for track

PRIMARY BENEFITS

- Increased arc time – no starts and stops
- Reduce wasted filler metal – eliminate over welding
- Consistent heat input reduces distortion
- Precise travel speed and torch angle reduces weld defects and costly rework
- Improves work environment – reduces fatigue and repetitive stress – removes operator from heat and fumes

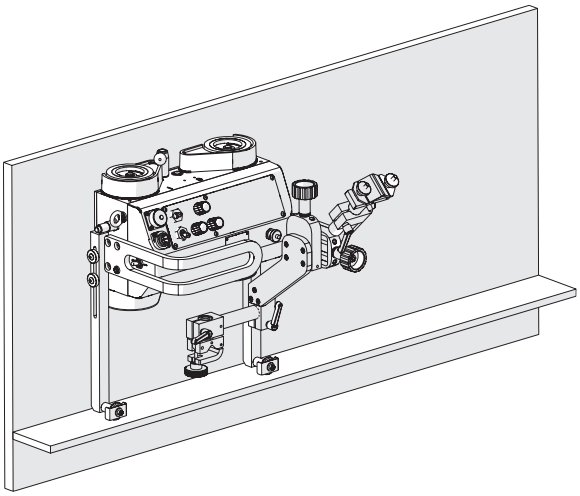

The Li'l Runner is able to run on a vertical piece of steel.

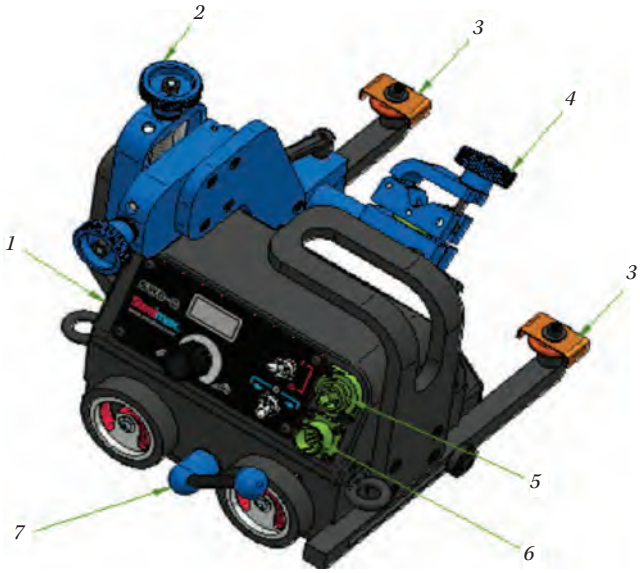

1. Drive unit with control panel
2. Cross slide assembly
3. Guide arm assembly with brass roller wheel
4. Quick release torch holder (optional accessory)
5. Power supply socket
6. Arc control cable socket
7. Magnet release lever

PORTABLE WELDING CARRIAGE

OPTIONAL ACCESSORIES:

1. **Dual Torch Mount**
   enables mounting of second torch for double-sided fillet welding
   Product Code: SM-PDT-0466-40-00-00-0

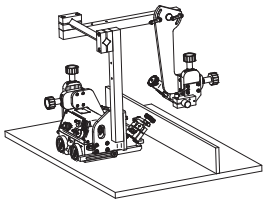

2. **Torch Extension Arm**
   enables extended reach for torch placement
   Product Code: SM-PRD-0466-43-00-00-0

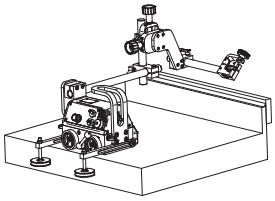

3. **Edge Following Guide Arms**
   enables guiding off an outside edge
   Product Code: SM-PRW-0466-41-00-00-**1**

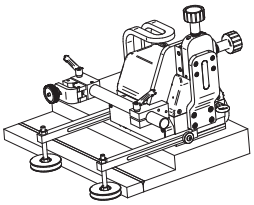

4. **Adjustable Guide Arms**
   enables guiding on lap joints and templates
   Product Code: SM-PRW-0466-42-00-00-1

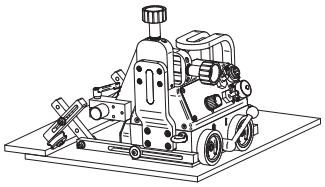

5. **Auxiliary Magnet Blocks**
   provides additional holding power for out-of-position welding with heavy torch loads
   Left – Product Code: SM-BLO-0466-44-01-00-0
   Right – Product Code: SM-BLO-0466-45-01-00-0

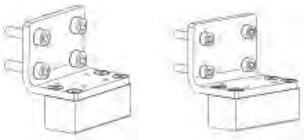
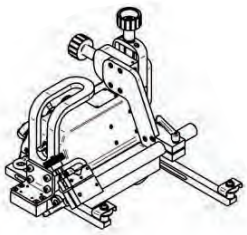

6. **Flexible Guide Rail**
   72” long flexible rail for welding on curved surfaces such as storage tanks
   Product Code: SM-PRW-0466-50-01-01-0

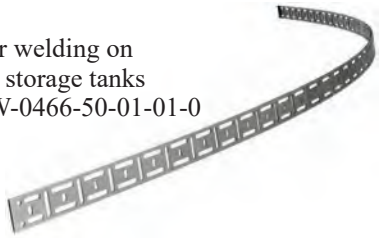

7. **Flexible Guide Rail Alignment Tool**
   quickly aligns the flexible guide rail to the appropriate distance from the joint
   Product Code: SM-UST-0466-53-00-00-0

8. **Rail Guide Arms for Li’l Runner**
   (set of 2)
   for use with flexible guide rail
   Product Code: SM-PRW-0466-50-02-00-1

9. **Magnet for Flex Rail**
   used to attach flexible guide rail to curved surfaces.
   10 required per rail section
   Product Code: SM-BLO-0466-50-01-10-0

10. **Quick Connect Torch Holder**
    quick connect/release torch holder
    Product Code: SM-ZRZ-0466-04-01-00-0

11. **Magnet Guide Arms for Li’l Runner**
    (set of 2)
    enables guiding on overhead profiles and permits bi-directional movement
    Product Code: SM-PRW-0466-52-00-00-1

12. **Low Guide Arms for Li’l Runner**
    (set of 2)
    enables guiding on short profiles and edges
    Product Code: SM-PRW-0466-65-00-00-1

13. **High Guide Arms for Li’l Runner**
    (set of 2)
    enables guiding on plates and stiffeners with cut outs and holes
    Product Code: SM-PRW-0466-66-00-00-1

Li'l RUNNER FROM STEELMAX®

Li'l Runner Technical Specifications		
Part Number		**SM-WC-LR-HS** **SM-WC-LR-DP** (Dual-Power)
Power supply		Dual Voltage 120 or 230V
Welding position		Vertical/Horizontal
Minimum material thickness		5/32″ (4 mm)
Chassis to material clearance		5/32″ (4 mm)
Travel mechanism		Friction drive with worm gear reduction
		Four wheel drive, heat resistant silicone wheels
Tracking method		2 guide rollers
Pulling power		22 lbs (10 kg) Vertical 33 lbs (15 kg) Horizontal
Cross slide adjustment:	Up-Down	1.4″ (35 mm)
	Left-Right	1.4″ (35 mm)
Guide roller adjustment		4″ (100 mm)
Control panel:	Arc Ignition Switch	Power supply On/Off
	Travel Direction Switch	Start Left, Stop, Start Right
	Li'l Runner HS Speed (IPM) Range	Horiz: 0 - 86.6″/min (0-2199 mm/min)
Dimensions (L x W x H)		9.6 x 10 x 9.5″ (240 x 258 x 253 mm)
Weight		17.5 lbs (8 kg)

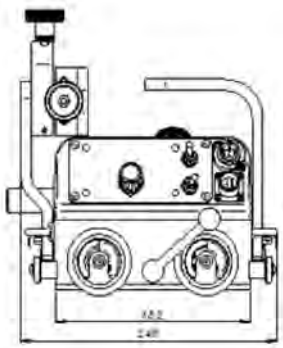

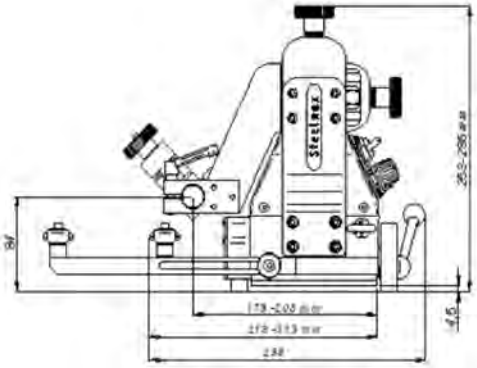

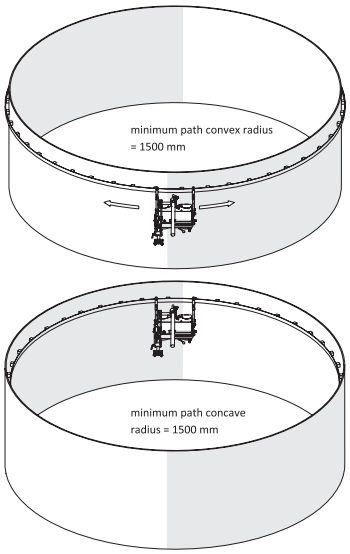

Li'l Runner DP
Standard kit includes:

- Drive unit (SM-WC-LR-DP)
  Dual-power, battery-operated Li'l Runner
- Battery
- Charger
- Arc control cable
- Guide arm assembly with brass roller wheel

Steelmax®
The tools of innovation.

WCLR 09/2019 All information is subject to change without notice. ©2019 STEELMAX

ARC RUNNER

PORTABLE & PROGRAMMABLE WELDING CARRIAGE REPEATS OPTIMUM WELD PROCEDURE

The Steelmax® Arc Runner is a portable, programmable welding carriage designed to produce consistent, high-quality welds. The powerful magnetic base and closed loop electronic speed control provide speed stabilization in all positions. The unit enables weld bead geometry that is exact to the required specifications, substantially reducing costly over welding and decreasing filler metal usage.

The Arc Runner can be programmed in continuous or stitch welding modes. Two easy-to-use function buttons enable programming of weld length, distance between welds, reverse fill, crater fill time and other required patterns and parameters. The Arc Runner travels at full speed between stitches, which saves valuable welding time.

An optional pendulum torch oscillator is available for the Arc Runner to produce weave welds. The oscillator allows for precise control of weave width, weave speed and left/right side wall dwell.

Arc Runner's microprocessor allows for development, storage and reproduction of up to 40 different welding programs for various joint configurations and multi-pass, multi-layer welds. Once an optimum weld procedure is developed, stored and programmed, Arc Runner will repeat it over and over again.

The Arc Runner can be used with the innovative Steelmax flexible guide rail system.

Steelmax®
The tools of innovation.

ARC RUNNER FROM STEELMAX®

FEATURES

- Compact, lightweight design with durable cast aluminum housing
- Permanent magnet clamping system with on/off lever ensures positive magnetic traction
- Maintenance free, 4-wheel planetary gear drive system
- Standard torch holder for welding torches with diameters of 5/8" – 7/8" (16-22 mm); optional large holder for diameters up to 1-3/8" (35 mm)
- Precise cross-slide torch adjustment
- Multifunctional LED display and 2 function buttons for welding pattern programming
- Closed-loop speed control system stabilizes travel speed to reduce weld defects and costly repair work
- Consistent heat input reduces distortion
- Automatic ARC ON/OFF system initiates welding and travel, simultaneously
- Self-guiding roller arms eliminate the need for track
- Improves work environment – reduces fatigue and repetitive stress – removes operator from heat and fumes
- Capable of carrying and controlling 2 torches (without oscillation)
- Up to 40 complete programs may be stored in non-volatile memory

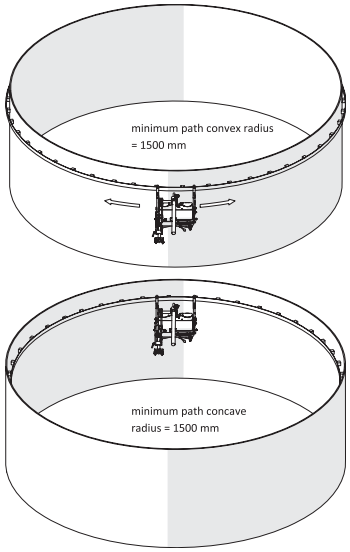

1. Drive unit with control panel
2. Main Supply Switch (0/I)
3. Cross slide assembly
4. Guide arm assembly with brass roller wheel
5. Quick release torch holder (optional accessory)
6. Power supply socket
7. Arc control cable socket
8. Magnetic adhesion release lever
9. Cable holder

OPTIONAL ACCESSORIES:

1. Oscillator

Oscillator Technical Specifications	
Oscillation type	Pendulum
Amplitude R-150 mm	0.08-1.2" (2-30 mm)
Frequency	12-115 cycles/min
Dwells	0-3 s.
Weight	5.5 lbs (2.5 kg)
Product Code	**SM-WC-AR-OSC**

2 . Dual Torch Mount
enables mounting of second torch for dual-sided fillet welding
Product Code: SM-PDT-0466-40-00-00-1

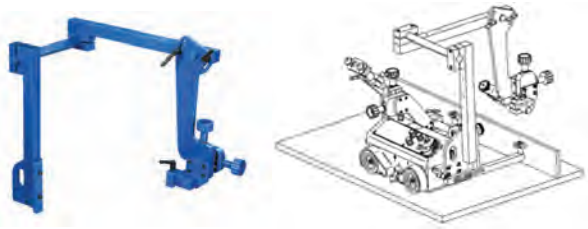

3. **Torch Extension Arm**
enables extended reach for torch placement
Product Code: SM-PRD-0466-43-00-00-0

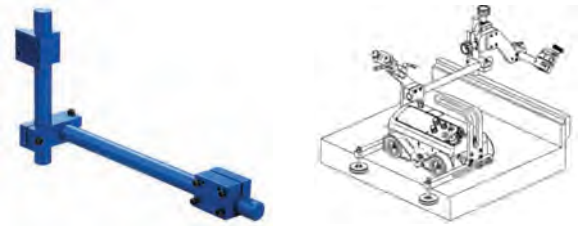

4. **Edge Following Guide Arms**
enables guiding off an outside edge
Product Code: SM-PRW-0476-21-00-00-1

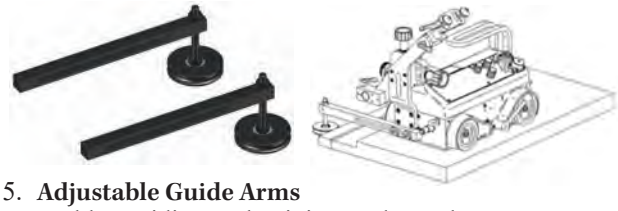

5. **Adjustable Guide Arms**
enables guiding on lap joints and templates
Product Code: SM-PRW-0476-22-00-00-1

6. **Flexible Guide Rail** 72" Long for LR and AR
Product Code: SM-PRW-0466-50-01-01-0

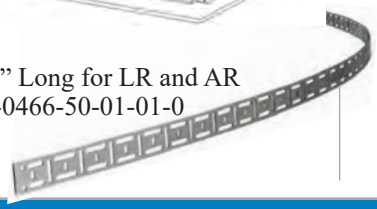

7. **Flexible Guide Rail Alignment Tool**
quickly aligns the flexible guide rail to the appropriate distance from the joint
Product Code: SM-UST-0466-53-00-00-0

8. **Rail Guide Arms for Arc Runner**
(set of 2)
Product Code: SM-PRW-0476-50-01-00-1

9. **Magnet for Flex Rail**
(LR and AR) - 10 required
Product Code: SM-BLO-0466-50-01-10-0

10. **Quick Connect Torch Holder**
quick connect/release torch holder
Product Code: SM-ZRZ-0466-04-01-00-0

11. **Magnet Guide Arms for Arc Runner**
(set of 2)
enables guiding on overhead profiles and permits bi-directional movement
Product Code: SM-PRW-0476-52-00-00-0

12. **Low Guide Arms for Arc Runner**
(set of 2)
enables guiding on short profiles and edges
Product Code: SM-PRW-0476-54-00-00-1

13. **High Guide Arms for Arc Runner**
(set of 2)
enables guiding on plates and stiffeners with cut outs and holes
Product Code: SM-PRW-0476-55-00-00-1

PROGRAMMABLE WELDING CARRIAGE FROM STEELMAX®

Arc Runner Technical Specifications		
Part Number		**SM-WC-AR** or **SM-WC-AR-230**
Power supply		115-230 VAC / 50-60 Hz (separate units due to plug interface)
Welding positions		Vertical / Horizontal
Chassis to material clearance		3/16" (5 mm) minimum
Drive system		Friction drive with worm gear reduction
		Four wheel drive, heat resistant silicone wheels
Tracking method		2 roller guides in various configurations
Towing force		Vertical: 33.7 ft. lbs (150 Nm)
		Horizontal: 49.5 ft. lbs (220 Nm)
Torch adjustment	Up-Down	1-3/8" (35 mm)
	Left-Right	1-3/8" (35 mm)
Guide roller adjustment		3" (75 mm)
Control panel	Travel direction switch	program start, direction left / stop / program start, direction right
	Function button F1	Continuous welding, dash, crater fill, backweld
	Function button F2	Value change "+" or "-"
	Arc ignition switch	TEST / 0 / 1
	Speed knob	Horizontal speed: 0 – 47-1/4"/min (0-1200 mm/min)
		Vertical speed: 0 – 43-3/8"/min (0-1100 mm/min)
Automatic stop		Limit switches at both ends
Noise Level		< 70 dB
Dimensions (LxWxH)		15" x 14-5/8" x 15-3/8" (382 mm x 372 mm x 390 mm)
Weight		29.8 lbs (13.5 kg)

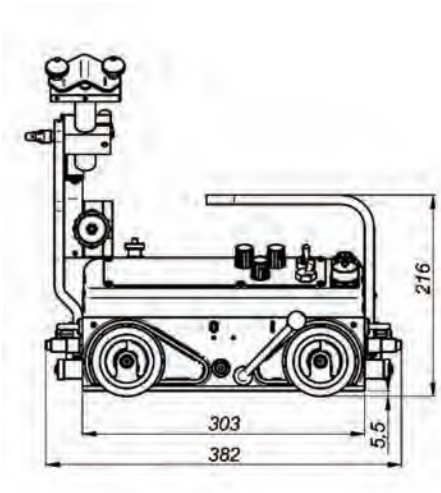

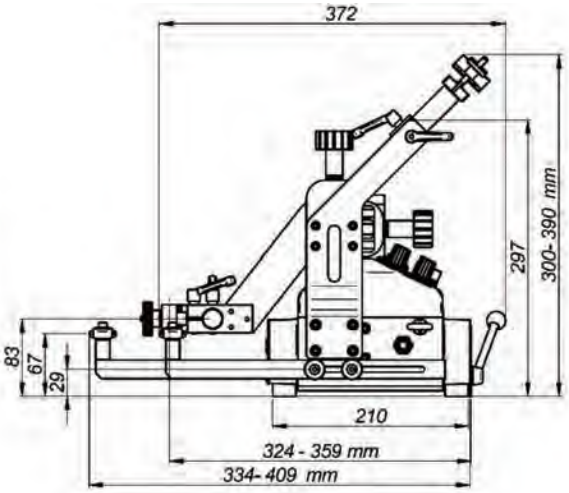

Steelmax®
The tools of innovation.

All information is subject to change without notice.

©2019 STEELMAX

RAIL RUNNER LT

ALL POSITION WELDING AND CUTTING TRAVEL CARRIAGE

The Steelmax **Rail Runner LT** is a digitally controlled rail mounted travel carriage designed for the mechanization of welding and thermal cutting processes. Mechanized control of the welding or cutting torch allows continuous welding or cutting, increasing operating factor and deposition rates in welding applications. The **Rail Runner LT** features a rack and pinion drive system with electronic speed control that produces weld bead geometry that is exact to your required specifications, reducing costly over welding and minimizing filler metal usage.

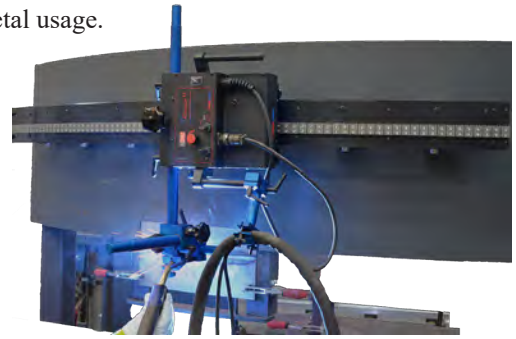

The **Rail Runner LT** can be used for plate and tank applications with a minimum diameter of 5 ft (10 m) and can be adapted to ring rails for pipe and tube applications.

Standard ring rails are available for tube diameters from 8" (200 mm) up to 10 ft (3 m). Custom rolled rails can be used for tube diameters between 10 ft (3 m) and 32 ft (10 m).

An optional vacuum system allows the rails to attach to non-ferrous surfaces such as stainless steel and aluminum.

The **Rail Runner LT** is an economical system for a wide range of welding and cutting applications on flat or curved plate, tube and pipe.

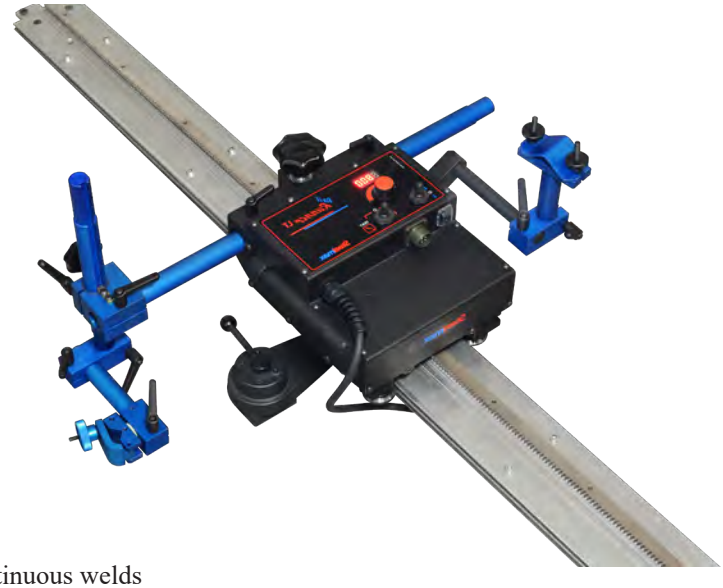

APPLICATIONS

- Trailer manufacturing
- Truck tanks
- Oil tanks
- Water storage tanks
- Pressure vessels
- Bridge girders
- Structural steel
- Structural towers
- Panel welding
- Transformers
- Shipyards
- Any application demanding long continuous welds

Continuous welding

Horizontal speed
4 – 80 in/min
(10–200 cm/min)

Vertical speed
4 – 80 in/min
(10–200 cm/min)

Ring tracks from
8" (200 mm) OD
up to 10 ft (3 m) OD

Hi Flex Track
min OD 1500 mm

Custom rolled tracks
from 3 m (10 ft) OD
up to 10 m (32 ft) OD

Min. path convex radius
for semi-flexible tracks
is 16 ft (5 m)

Steelmax®
The tools of innovation.

RAIL RUNNER LT

FEATURES

- Compact, lightweight design
- Closed-loop encoder insures accurate speed control
- Rack and pinion drive
- Digital LED display for pre-setting travel speed
- Automatic arc on/off initiates welding and travel simultaneously
- Suitable for a variety of circumferential and irregular surface applications down to a minimum diameter of 8” (200 mm)
  - Ring rails for diameters from 8” (200 mm) OD up to 10 ft (3 m) OD
  - Custom rolled rails for diameters from 10 ft (3 m) OD
    up to 32 ft (10 m) OD
  - Semi-flexible rails can be bent to a minimum radius of 16 ft (5 m) without permanent deformation
- Gear-driven cross slide for precise torch adjustment
- Application-specific accessory kits for oxy-fuel, plasma, MIG/MAG and SAW processes

MIG/MAG Welding Torch Holding Kit
SM-ZST-0570-03-03-00-0

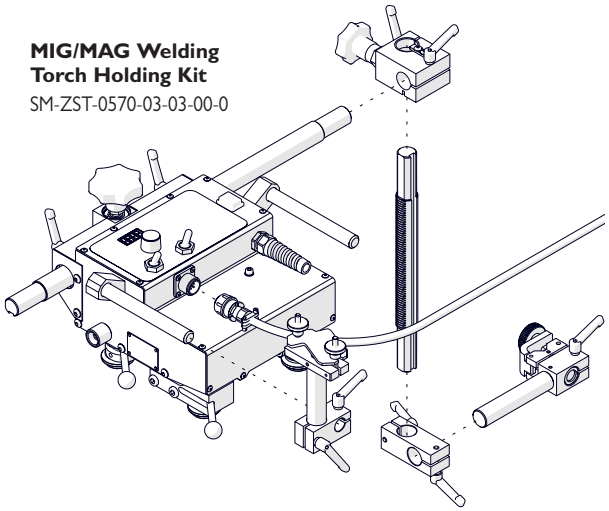

SAW Welding Torch Holding Kit
SM-ZST-0570-03-04-00-0

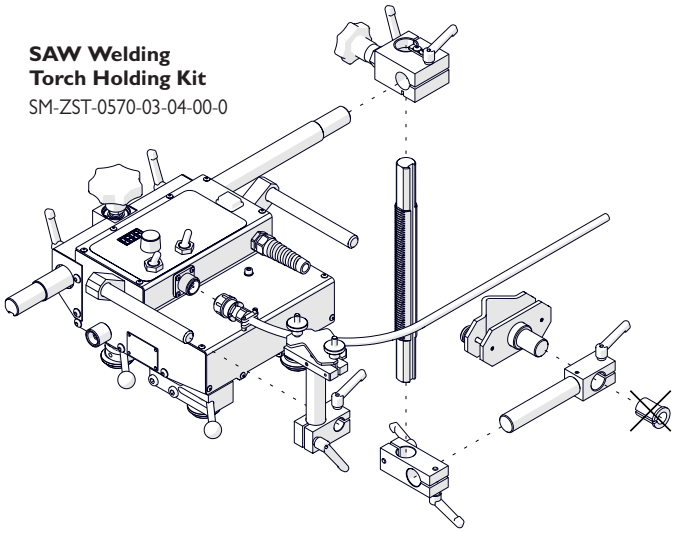

Oxy-fuel Cutting Torch Holding Kit
SM-ZST-0570-03-01-00-0

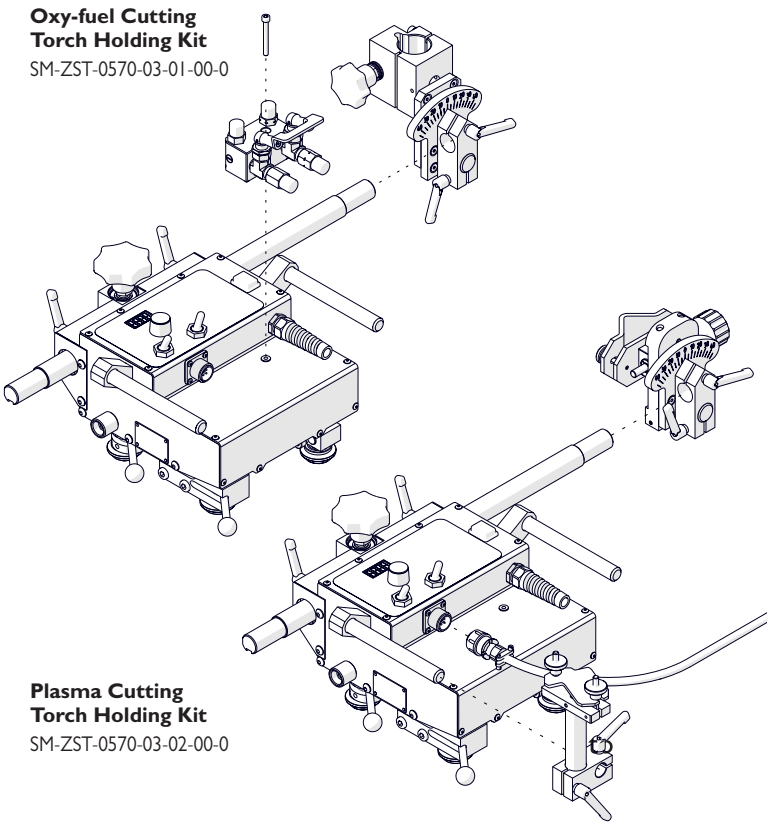

Plasma Cutting Torch Holding Kit
SM-ZST-0570-03-02-00-0

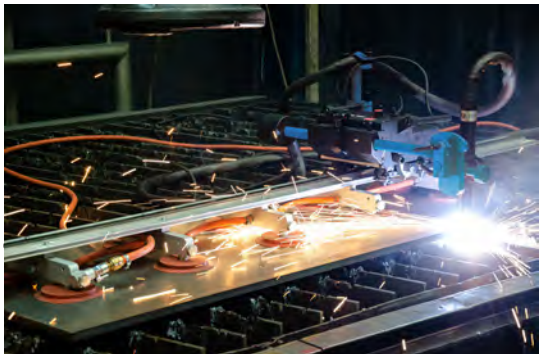

Rail Runner LT Technical Specifications		
Voltage		115 - 230V 50 - 60 Hz
Power		66 Watts
Rail Options for Round Tube & Pipe	Ring Rails	8" OD to 10' OD (200 mm to 3m OD)
	Hi-Flex Rail	Minimum Curvature Radius of 2-1/2' (.75 m)
	Semi-Flexible Rail	Minimum Curvature Radius of 16' (5m)
Torch Types		Oxy-fuel, Plasma, MIG/MAG, SAW
Torch Diameter	Oxy-Fuel	up to 1-3/8" (35 mm)
	Plasma, SAW	up to 1-3/8" (35 mm)
	MIG/MAG	5/8" - 7/8" (16 - 22 mm)
Horizontal Pulling Force		67.5 Lbs
Vertical Pulling Force		45 Lbs
Horizontal Speed Range		4 - 80 in/min (10 - 200 mm/min)
Vertical Speed Range		4 - 80 in/min (10 - 200 mm/min)
Weight		22 Lbs (10 Kg)
Part Number		SM-WC-RR-LT

STANDARD SHIPPING SET:

- Rail Runner LT tractor
- 21” (540 mm) geared rack
- 6 mm hex wrench
- 10 ft (3 m) power cord
- Operator’s Manual

Steelmax®
The tools of innovation.

All information is subject to change without notice.
©2019 STEELMAX

RAIL RUNNER

INCREASE PRODUCTION AND IMPROVE WELD QUALITY WITH MAGNETICALLY FIXED RAIL-GUIDED TRAVEL CARRIAGE

The **Steelmax® Rail Runner** is a digitally controlled travel carriage designed for the mechanization of welding and thermal cutting processes. Featuring a positive rack and pinion drive system with electronic speed control, the **Rail Runner** can produce consistent, high quality welds and cuts in the flat, vertical or horizontal position. A multi-function LED display permits precise setting of process parameters making set up and repetition of predefined weld procedures quick and simple.

The **Rail Runner** is available in two versions: (i) the standard version with the integrated linear oscillator; and (ii) a basic version without integrated linear oscillation. As a result, the **Rail Runner** family of track mounted welding carriages economically meets a broad array of welding and cutting applications.

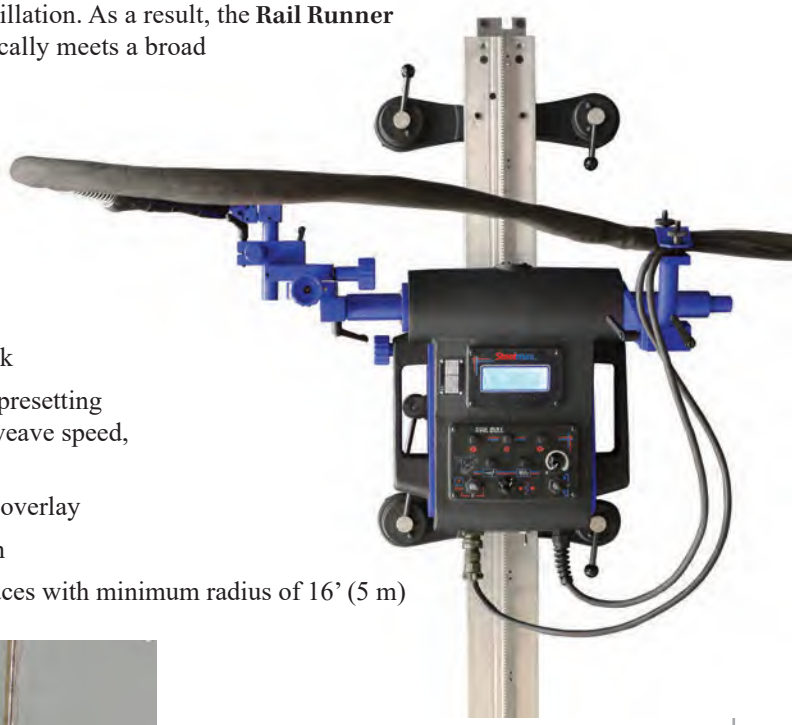

FEATURES

- Durable aluminum cast housing
- Automatic arc ignition integrated with travel switch
- Precise cross slide torch adjustment
- Closed loop position control with encoder feedback
- LED display with numeric representation permits presetting of all motion parameters including weave width, weave speed, side wall dwells and tractor travel speed
- Integrated linear oscillator for weave welding and overlay
- Electronic torch steering during weaving operation
- Semi-Flexible Guide Rail will adhere curved surfaces with minimum radius of 16' (5 m)

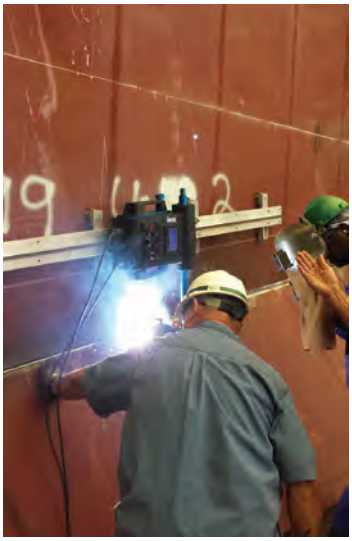

Steelmax®
The tools of innovation.

TRACK WELDING CARRIAGE FROM STEELMAX®

Rail Runner Technical Specifications		
Part Number		**SM-WC-RR** (with oscillation) **SM-WC-RR-WO** (without oscillation)
Power Supply – Dual Voltage		115-230 V / 50-60 Hz
Power		100 W .13 HP
Welding Positions	Horizontal	PA (flat), PB (horizontal vertical), PC (horiz.)
	Vertical	PF (vertical up), PG (vertical down)
Minimum track way curvature radius		16 ft (5 m)
Torch diameter		5/8" – 1" (16 - 25 mm)
Minimum welding material thickness		3/16" (5 mm)
Pulling Force	Horizontal work	77 lbs (350N)
	Vertical work	33 lbs (150N)
Torch adjustment range		1-3/8" up-down, left-right (35 mm)
Horizontal speed		0 – 47-3/8"/min (0 - 120 cm/min)
Vertical speed		0 – 43-5/16"/min (0–110 cm/min)
Oscillation type		linear
Oscillator arm stroke		0 – 4" (0 - 100 mm)
Oscillation width		0 – 1.9" (0 - 50 mm)
Oscillation speed		0 – 59"/min (0 - 1500 mm/min)
Oscillation dwells		0–5 s
Weight		44 lbs (20 kg)

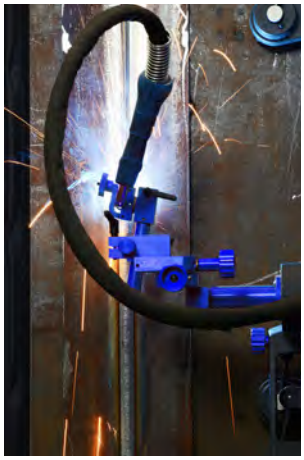

Suitable for work in both horizontal and vertical positions

User-friendly control panel

The included equipment consists of:

- Welding carriage
- Metal box
- Torch holder
- Cable holder
- Power cord
- Arc ignition cable of 6.5 m (21 ft)
- 3 mm hex wrench
- 4 mm hex wrench
- Operator's Manual

Additional accessories:

- SM-PRW-0482-15-02-00-0
  Track segment of
  6.5 ft (2 m)

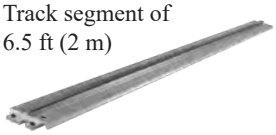

- SM-ZSP-0475-56-00-00-0
  Magnetic base unit

- SM-DYS-0482-15-01-01-0
  Mounting Bracket for Magnet

Steelmax®
The tools of innovation.

All information is subject to change without notice.
©2019 STEELMAX

RAIL RUNNER Gen III

MODULAR TIG | MIG | MAG WELDING/CUTTING TRACK WELDING MACHINE

The Steelmax® Rail Runner Gen III is a compact, modular, mechanized carriage which can be custom configured for a variety of welding, thermal cutting and gouging applications on flat or curved plate, tube and pipe. By utilizing a magnetic guide rail and positive rack and pinion drive, the system can be utilized in all welding positions. Ergonomic remote control pendant with simple, easy to find control knobs makes process adjustment possible without the operator lifting their welding hood. A digital display with numeric representation for each motion parameter makes presetting the optimum welding or cutting procedure simple and highly repeatable. The Rail Runner Gen III increases arc-on time and produces consistent, high-quality welds and cuts in a fraction of the time required by manual operations. Optional accessories include tactile probe seam tracking and motorized vertical torch slide for automatic torch height control.

Applications:

- Trailer manufacturing
- Truck tanks
- Oil tanks
- Water storage tanks
- Pressure vessels
- Vessel overlay / hardfacing
- Bridge girders
- Structural steel
- Structural towers
- Panel welding
- Transformers
- Shipyards
- Any application demanding long continuous welds

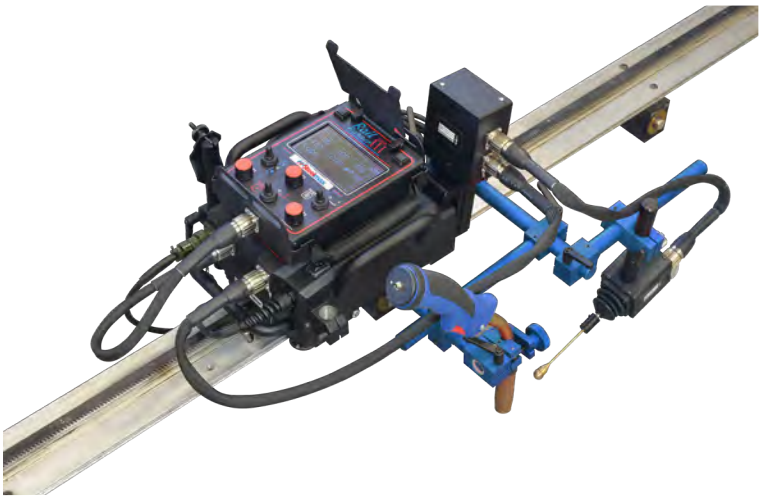

Steelmax®

The tools of innovation.

REMOTE CONTROL PENDANT

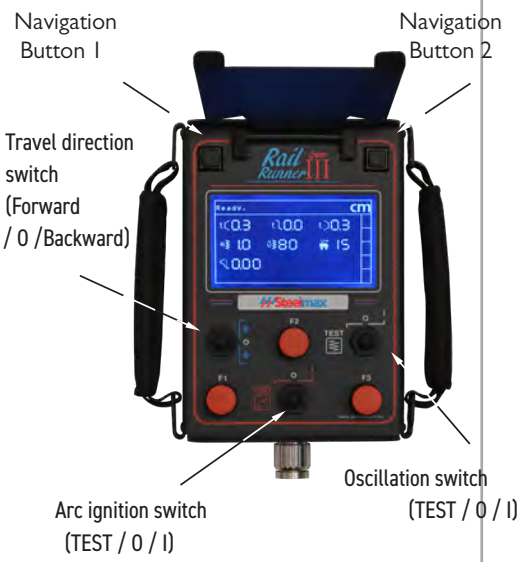

MODULAR TRACK WELDING & CUTTING TRACTOR ®

Rail Runner Gen III Technical Specifications		
Voltage		1 ~ 42V, 115V, 230V, 50-60 Hz
Power		60 W
Welding Positions		Vertical, Horizontal, Flat
Mounting on curved and round surfaces	Ring tracks (OD) Hi-flex tracks (OD) Hi-flex tracks (ID) Semi-flex tracks	8 in (200mm) -10 ft (3m) Minimum 5 ft (1.5 m) Minimum 11 ft (3.4 m) Minimum 32 ft (10m)
Torch diameter		0.63–0.87 in (16-22 mm) to 1.38 in (35mm)
Minimum workpiece thickness		0.2 in (5 mm)
Pulling Force	Horizontal	90 lbs
	Vertical	90 lbs
Horizontal speed		0-98 in/min (0-250 cm/min)
Vertical speed		0-98 in/min (0-250 cm/min)
Oscillation type		Linear
Oscillation path		triangle, straight line, trapezoid, square
Oscillator arm stroke		0-3.9 in (0-100 mm)
Oscillation width		0.04-4.5 in (0.1-11.8 cm)
Oscillation speed		5-78 in/min (10-200cm/min)
Oscillation delay at center and on ends		0-5 seconds
Maximum oscillator pulling force		22 lbs
Weight		29 lbs (13 kg)

WEAVE PATTERNS

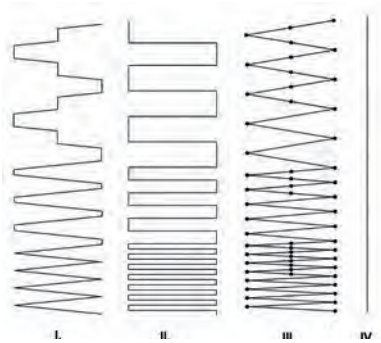

I. Trapezoid
The tractor travels continuously even during dwell mode. Weld path is determined by weave speed and dwell time at center and on sides of the weld path.

II. Square
The tractor travels only during dwell and stops during oscillator cross travel. Only dwell time determines the weld path, and weave speed has no influence.

III. Triangle
The tractor travels only during weaving.
Both the tractor and oscillation stop during dwell mode.

IV. Straight
The tractor travels continuously while oscillation is switched-off.

Primary features and benefits:

- Suitable for TIG welding (HF resistant)
- Robust design with die-cast aluminum housing
- Ergonomic remote control pendant with simple control knobs makes adjustments possible without lifting of the operators welding hood
- Programmable stitch welding
- Suitable for variety of circumferential and irregular surface applications down to min. radius of 4" (100 mm)
  - Ring tracks on diameters from 8" (200 mm) OD up to 10 ft (3 m) OD
  - Hi-Flex tracks on diameters from 59" (1500 mm) OD upwards
  - Custom rolled tracks on diameters from 10 ft (3 m) OD up to 32 ft (10 m) OD
  - Semi-flexible tracks can be flexed to minimum radius of 16 ft (5 m) without permanent deformation
- Active compensation of torch position vertically and horizontally also with oscillator in use by means of modular automatic seam tracking system
- Suitable for all welding positions on both ferroous and non-ferrous materials thanks to rack and pinion drive and various tracks equipped with magnetic or vacuum units

Optional accessories:

- Motorized Vertical Slide SM-WC-RRNG-VS

Seam Tracking Sensor
SM-WC-RRNG-ST

Steelmax®
The tools of innovation.

©2020 STEELMAX
ALL INFORMATION IS SUBJECT TO CHANGE WITHOUT NOTICE.

RAIL OPTIONS FOR RAIL RUNNER FAMILY OF CARRIAGES

Hi-Flex Rail

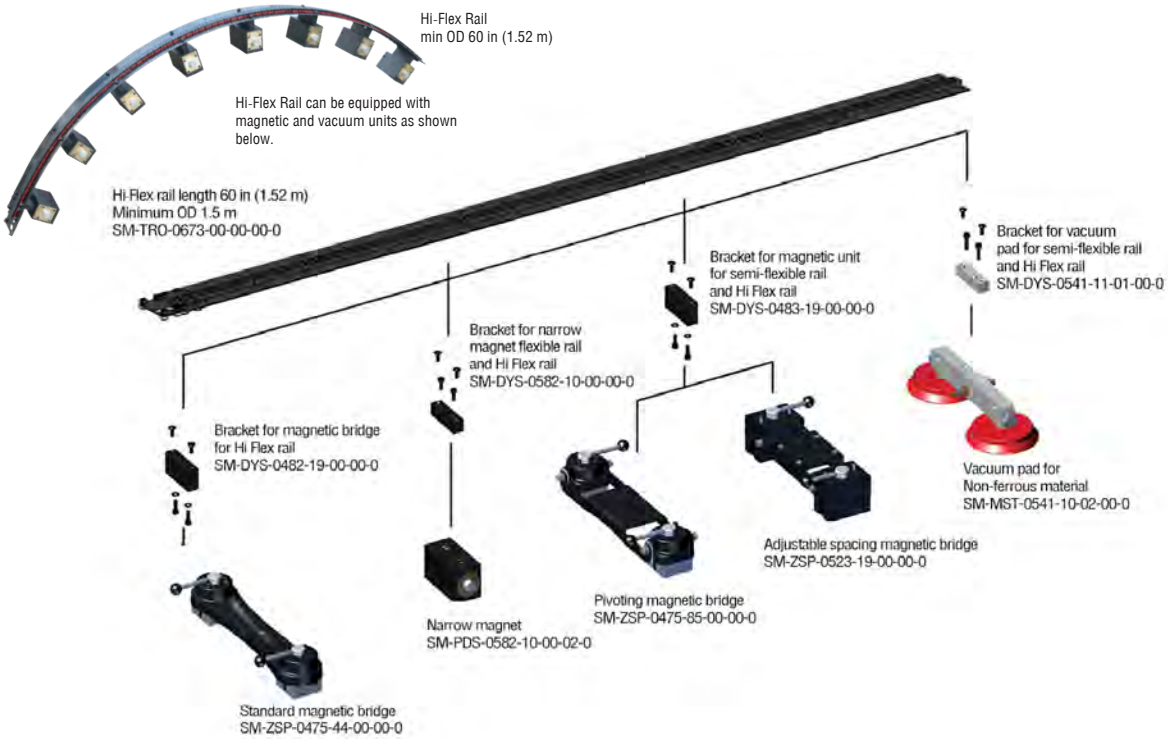

Set of Hi Flex Rail Guiding Rollers (4 pcs)
Product code: SM-ZSP-0673-07-00-00-0

The regular Rail Runner/ Rail Runner 2 rollers should be replaced with the optional Hi Flex Rail guiding rollers

Ring Rails

Available on request, diameter can be custom configured within the range from from 8" OD up to 10 ft OD (200 mm to 3000 mm).

Ring tracks can be equipped with various supports depending on the customer's needs.

Ring Rail Support with Magnetic feet
SM-WSP-0523-14-12-00-0

Ring Rail Support with plastic feet
SM-WSP-0523-14-11-00-0

RAIL OPTIONS FOR RAIL RUNNER FAMILY OF CARRIAGES

Semi Flex Rail

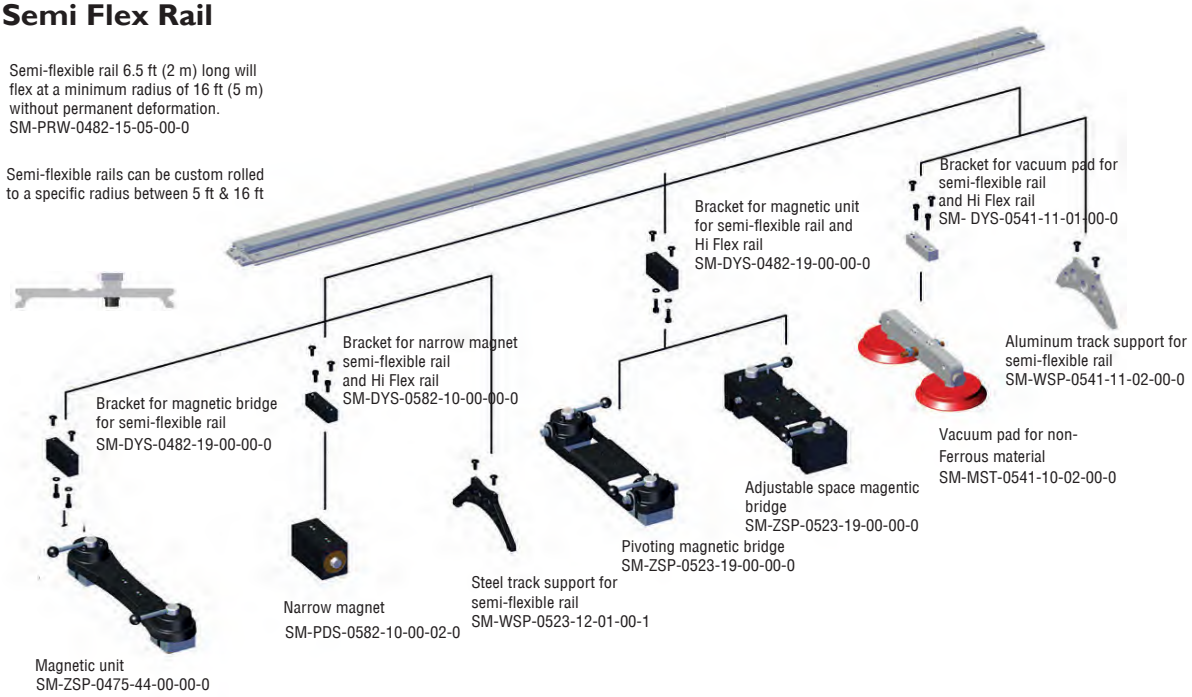

Rigid Rail

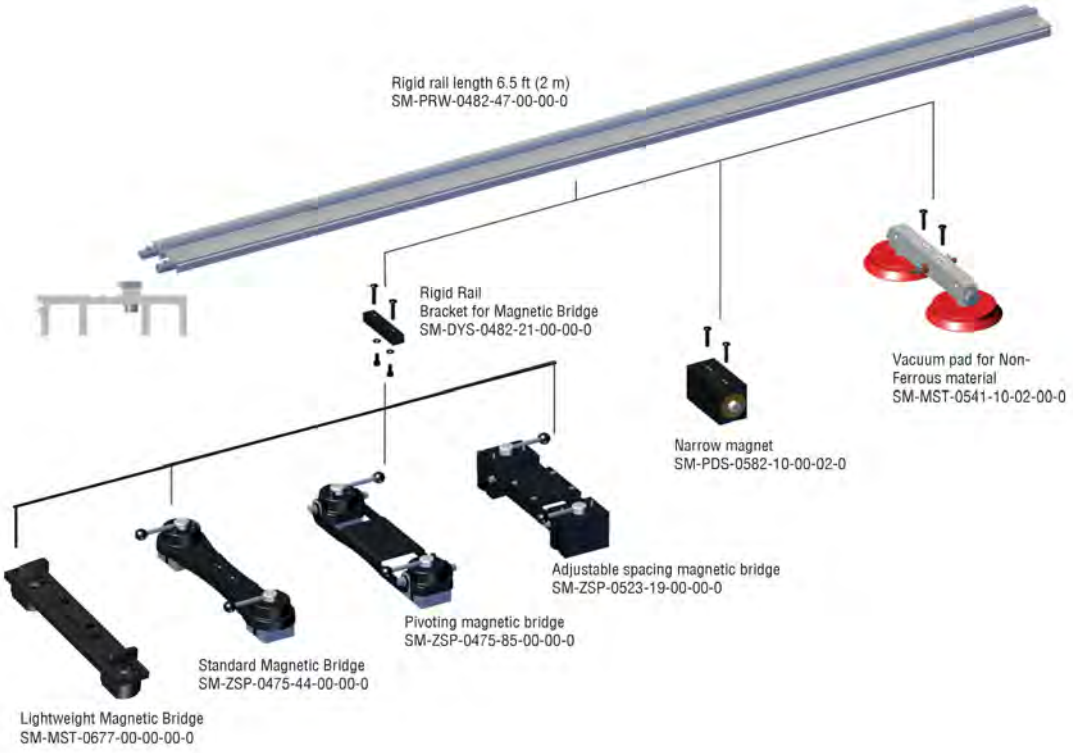

Welding Oscillator

AUTOMATIC WEAVE WELDING

Improve your circumferential welding processes with the Steelmax stand-alone **Welding Oscillator** and **Mini-Manipulator**. This lightweight, compact weld weaving oscillator provides you with full control of oscillation parameters, making it an ideal weave welding solution for many applications including: pipes, tubes, vessels, flanges, fittings, and much more. Combine this system with welding positioners, turning rolls, track-mounted welding carriages, trackless carriages, an existing welding system, such as a column and boom, or use it independently with the rugged freestanding **Mini-Manipulator**.

FEATURES

- Two working modes: automatic with existing weld fixtures and manual using the system independently with the Mini-Manipulator
- Simple adjustemnt of four weld parameters: oscillation width, oscillation speed, right and left dwell times
- Lightweight and portable

BENEFITS

- **Increased Productivity**: Provides non-stop 360° welding when used with rotation devices such as welding positioners and turning rolls.
- **Improved Weld Repeatability**: Precise travel speed and torch angle reduces costly over-welding and rework, granting precise repeatability and consistent bead geometry.
- **Ergonomics and Safety**: Removes the operator from potentially hazardous heat and fumes created by prolonged open arc welding processes. Relieves the operator from repositioning reducing fatigue and stress.

Steelmax®
The tools of innovation.

All information is subject to change without notice.

WELDING OSCILLATOR & MINI-MANIPULATOR

Oscillator Technical Specifications	
Voltage	115V or 230V (sold separately)
Torch type	MIG/MAG
Torch diameters	5/8”-7/8” (16-22 mm)
Oscillation type	Pendulum
Oscillation width	1/32”-1-3/16” (1-30 mm)
Oscillation speed	12-115 cycles/min
Oscillation dwell time range	0-3 s
Maximum torque	5.7 lb·ft (8 N·m)
Weight	4 lbs (2 kg)
Welding Oscillator part number	SM-OSC- **0497-24-00-00-0**
115V/230V power supply (sold seperatly) *- Includes 10’ power cord and 10’ control cable*	**SM-ZSL-0497-16-00-01-0 (115V)** **SM-ZSL-0497-16-00-00-0 (230V)**

FREESTANDING MINI-MANIPULATOR

The Freestanding **Mini-Manipulator** from Steelmax can be used with the **Welding Oscillator** or as an independent welding positioner. This lightweight column and boom provides full control of the oscillator or torch position during operation. Easily transport the Mini-Manipulator to wherever it’s needed for quick and easy use.

Mini-Manipulator Technical Specifications	
Torch holder diameter	5/8–7/8” (16–22 mm)
Arm horizontal stroke	22” (560 mm)
Arm vertical stroke	25” (640 mm)
Weight	33 lbs. (15.3 kg)
Part Number	SM-STJ-0629-24-00-00-0

Mini-Manipulator with Oscillator

Mini-Manipulator as positioner

All information is subject to change without notice.

CNC CUTTING SYSTEM FROM STEELMAX®

SHAPERUNNER® 3200 HD

MODULAR AND PORTABLE CNC CUTTING

The **Shape Runner® 3200 HD** from Steelmax is a modular, portable and affordable CNC cutting system for all of your cutting needs, whether with plasma or flame cutting processes. The **Shape Runner's** light weight, portability and minimal footprint make it the ideal choice for small shops looking to automate their cutting processes or for larger shops that need additional capacity away from their production cutting lines. With a cutting area of 5' x 11' the **ShapeRunner 3200 HD** is an extremely versatile solution, providing high-quality results without the price or the footprint of a traditional gantry cutting system.

The **Shape Runner® 3200 HD** works with virtually all plasma power sources and can be uniquely configured to meet each user's specific needs, providing the highest value per cut in the industry. Whether you use the **Shape Runner® 3200 HD** with a dedicated cutting table or you move the **Shape Runner®3200 HD** to the material, it is the go-to cutting machine. Each machine even includes CAD drawings and specifications for a robust cutting table specifically designed by Steelmax for the **Shape Runner® 3200 HD**.

FEATURES

- Multi-process controller easily manages plasma power supplies as well as Oxy-Fuel cutting processes
- Automatic arc-voltage torch-height control and pierce distance control
- Precision guide rails ensure accurate and repeatable cutting performance
- Built-in shape library – 24 standard shapes with easily edited dimensions
- Fully integrated part nesting capabilities
- Standard USB port for loading custom two-dimensional shapes from standard CAD files
- Emergency stop button
- 32 MB standard internal memory for program storage
- Standard 5' cutting width, with 11' cutting length
- Fully licensed copy of FASTCAM software included with each machine

CNC CUTTING FROM STEELMAX®

TECHNICAL SPECIFICATIONS	
Effective Cutting Width	8 Ft. (2500 mm)
Effective Cutting Length	11 Ft., (3400 mm)
Rapid Speed	236 IPM (6000 mm/min)
Cutting Speed Range	2 - 236 IPM (50 - 6000mm/min)
Supply Voltage	115 Volts (Standard) / 220 Volts
PLASMA CUTTING	
Torch Holder	Standard 1 3/8" (35 mm) Machine Barrel
Height Control	Through The Arc Height Control
Collison Detection	Ohmic Crash Sensing Through The Nozzle
OXY - FUEL CUTTING	
Torch Holder	Standard 1 3/8" (35 mm) Machine Barrel
Hose Sizes	Standard "B" Oxy-Fuel Fittings (9/16" - 18 UNF)
CNC CONTROLLER	
Operation Panel	7" Color Display
Program Format	G Code
Shape Library	24 Shapes with Editable Dimensions
CAM Software	FASTCAM Included with Each System
Controller features	Outline, Scale, Mirror, Rotate, Kerf compenation, and Nesting

Standard Machine Package Includes:

- CNC Control Unit
- 5' x 11" Working envelope
- Motorized Z axis for Torch Height Control
- Torch holder for 1 3/8" machine barrel torch
- Interface cable for plasma power supply – Specify Power Supply
- Tubing/Solenoids for Oxy-Fuel cutting (Torch and short hoses sold separately)
- FASTCAM software
- CAD drawings for custom Steelmax burn table

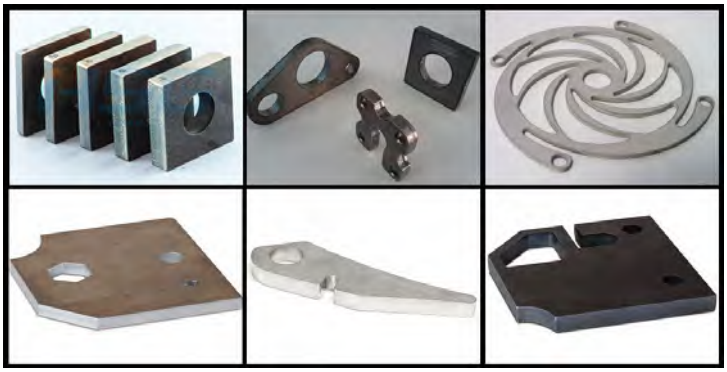

Steelmax®
The tools of innovation.

SR 11/2017
ALL INFORMATION IS SUBJECT TO CHANGE WITHOUT NOTICE.
©2017 STEELMAX

MIG WIRE FEEDER BOOMS FROM STEELMAX®

TELESCOPIC, PIVOT & HYDRAULIC Options Available

INCREASE WELDING STATION EFFICIENCY, FLEXIBILITY & SAFETY

Steelmax® MIG Wire Feeder Booms are expertly designed to improve manufacturing floor space efficiency and promote a safer workplace. These incredibly useful devices organize a welder's fabrication area by removing welding cables from the shop floor and locating them on an overhead boom for better cable management and safety. Our MIG Wire-Feeder Booms dramatically improve efficiency in large fabrication operations by eliminating time consuming equipment moves and increasing a shop welder's mobility. The MIG Wire-Feeder Booms also protect your investment in costly welding equipment by reducing damage from equipment sitting on and being moved across the shop floor.

Steelmax presents three designs to effectively address any desired worksite configuration.

Wall Mounted Telescopic Boom

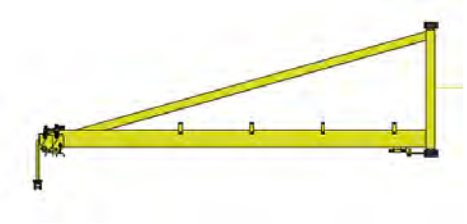

Wall Mounted Pivot Boom

Floor Standing Hydraulic Boom

Features and Benefits

- Expands workspace envelope
- Improves freedom of movement and welder efficiency
- Eliminates wire feeding problems caused by long cable feed assemblies
- Promotes a safer, less cluttered work environment
- Robust design and construction
- Easy to install
- Supports wire feeders up to 110 lbs (50 kg) (including wire and spool)

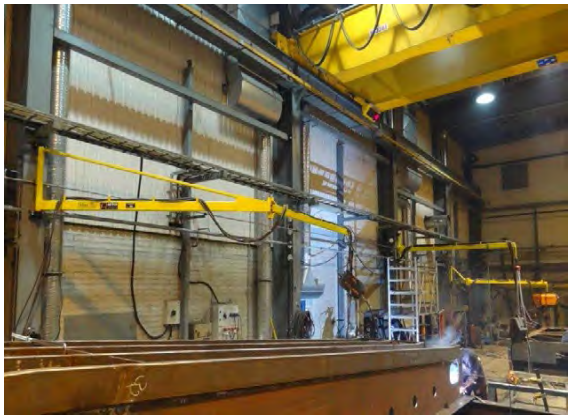

Steelmax®

The tools of innovation.

MIG WIRE FEEDER BOOMS FROM STEELMAX®

Wall Mounted Telescopic Wire Feeder Boom

- Rotates up to 180° around the vertical axis
- 2 models with adjustable reach of 106”-236” (2700 mm - 6000 mm) and 128”-304” (3251 mm- 7729 mm)
- Part Numbers: SM-WFB-TLB6000
  SM-WFB-TLB8000

TLB 8000 Operating Parameters

Maximum reach 304” (7729 mm)

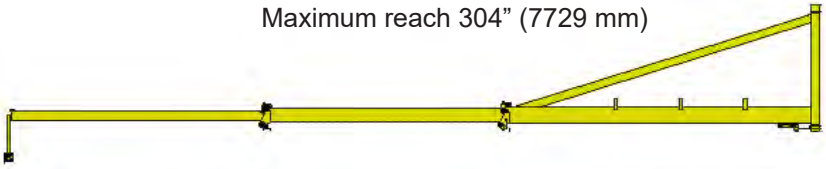

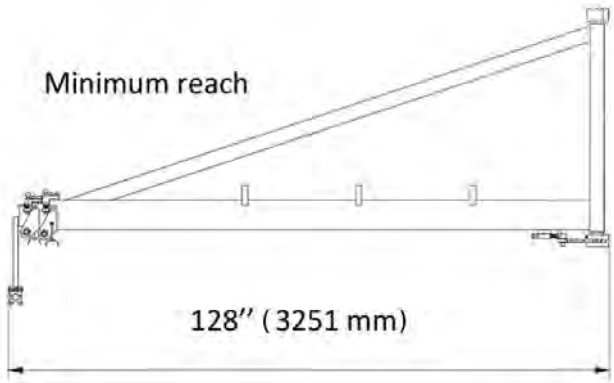

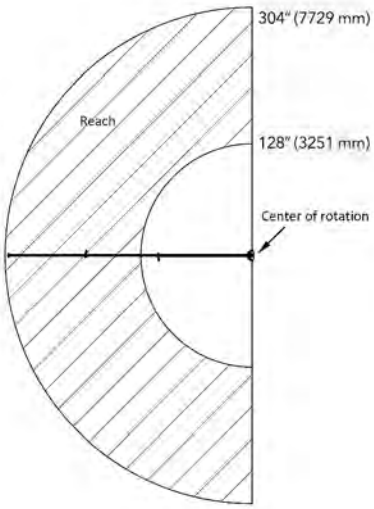

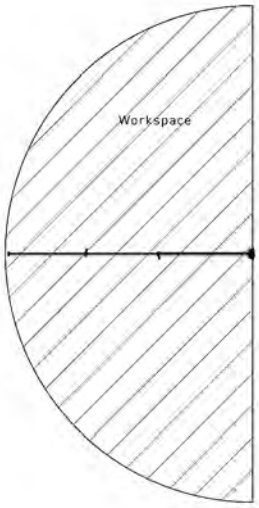

Technical Specifications

Wall Mounted Telescopic Wire Feeder Boom Technical Specifications		
Model Number	**TLB-6000**	**TLB-8000**
Reach	106" - 236" (2700-6000 mm)	128" - 304" (3252-7729 mm)
Rotation Angle	0-180°	0-180°
Maximum load (wire feeder, wire)	110 lbs (50 kg)	110 lbs (50 kg)
Minimum dimensions	106" x 47" x 11" 2700 mm x 1206 mm x 287 mm	128" x 47" x 11" 3251 mm x 1206 mm x 287 mm
Maximum dimensions	236" x 47 x 11" 6000 mm x 1206 mm x 287 mm	304" x 47 x 11" 7729 mm x 1206 mm x 287 mm
Weight	216 lbs (98 kg)	216 lbs (98 kg)
Part Number	SM-WFB-TLB6000	SM-WFB-TLB8000

Steelmax®

The tools of innovation.

ALL INFORMATION IS SUBJECT TO CHANGE WITHOUT NOTICE.

©2020 STEELMAX

Wall Mounted Pivot Wire Feeder Boom

- Rotates up to 180° around the vertical axis
- Movable arm can be rotated up to 180° around the pivot
- Adjustable reach of the boom from close proximity to vertical axis up to 235” (5980 mm)
- Part Number: SM-WFB-PVB6000

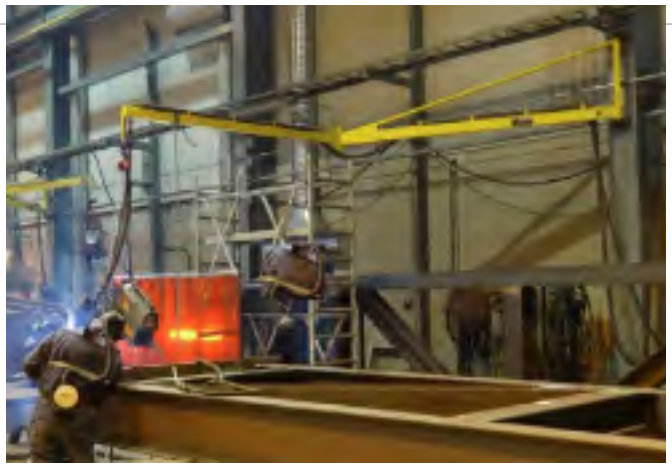

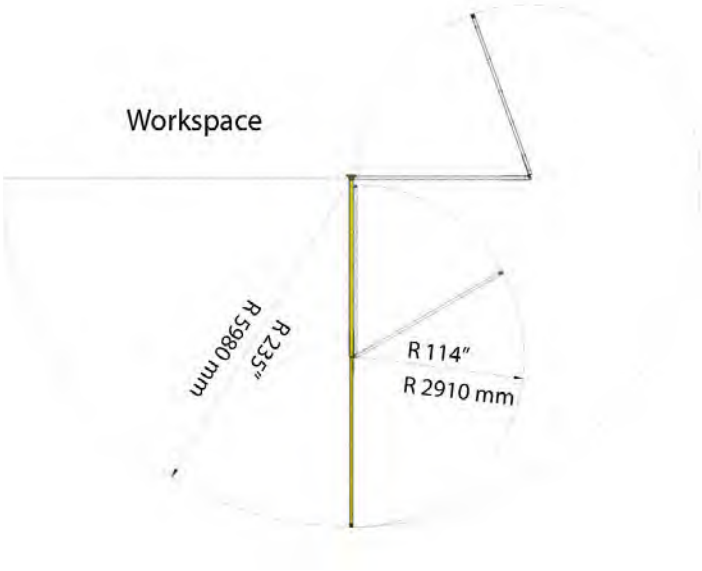

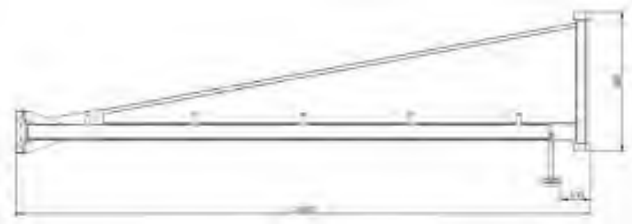

Technical Specifications

Wall Mounted Pivot Wire Feeder Boom Technical Specifications	
Model Number	**PVB-6000**
Reach	121" - 235" (160-5980 mm)
Rotation Angle	0-180°
Maximum load (wire feeder, wire)	110 lbs (50 kg)
Minimum dimensions	121" x 45" x 7" 3095 mm x 1148 mm x 176 mm
Maximum dimensions	235" x 45" x 7" 5980 mm x 1148 mm x 176 mm
Weight	220 lbs (100 kg)
Part Number	SM-WFB-PVB6000

ALL INFORMATION IS SUBJECT TO CHANGE WITHOUT NOTICE.
©2020 STEELMAX

WIRE FEEDER BOOMS FROM STEELMAX®

Floor Standing Hydraulic Wire Feeder Boom

- Rotates 360° around the vertical axis
- Adjustable height of the boom from 51” (1300 mm) to 135” (3430 mm)
- Part Number: SM-WFB-HFB-360

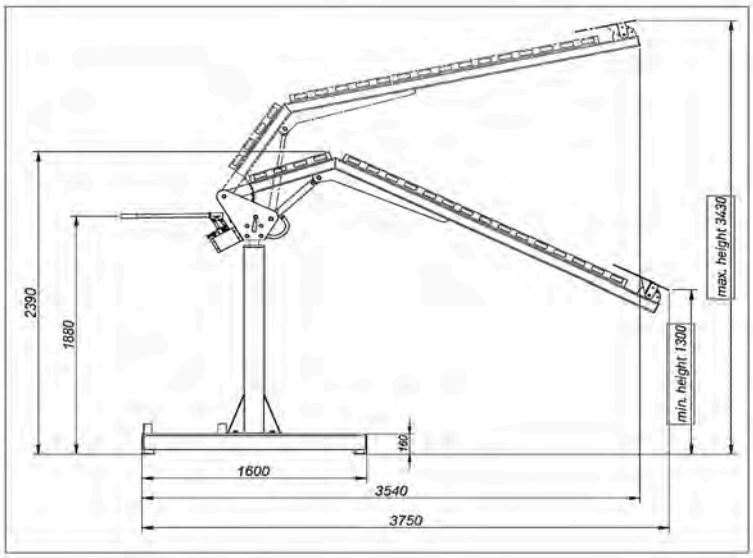

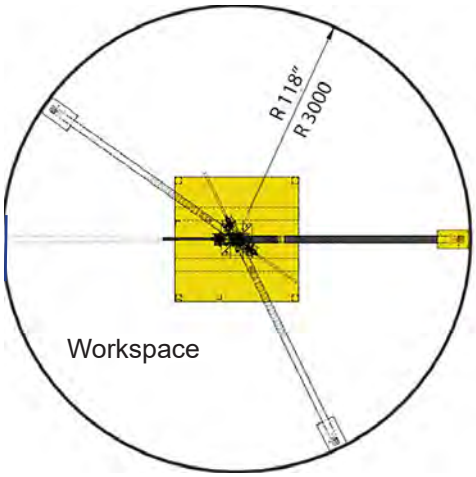

Technical Specifications

Hydraulic Wire Feeder Boom Technical Specifications	
Model Number	**HFB-360**
Reach	118" (3000 mm)
Rotation Angle	0-360°
Maximum load (wire feeder, wire)	110 lbs (50 kg)
Dimensions (L x W x H)	148" x 63" x 94" (min) / 135" (max) 3750 mm x 1600 mm x 2390 mm (min) / 3430 mm (max)
Wire Feeder Height Range	50" - 135" (1300-3430 mm)
Weight	733 lbs (330 kg)
Part Number	SM-WFB-HFB-360

Steelmax®
The tools of innovation.

ALL INFORMATION IS SUBJECT TO CHANGE WITHOUT NOTICE.
©2020 STEELMAX

Notes:

Steelmax®

The tools of innovation.

©2023 STEELMAX

AHB
TOOLING & MACHINERY
COMPLETE METALWORKING SOLUTIONS
(800) 991-4225 www.ahbinc.com
ISO Certified customerservice@ahbinc.com

Steelmax®
The tools of innovation.

801 W. Mineral Ave. Suite 103, Littleton CO, 80120
121 Southpointe Drive, Bridgeville, PA 15017

Please contact us for your custom tool needs.

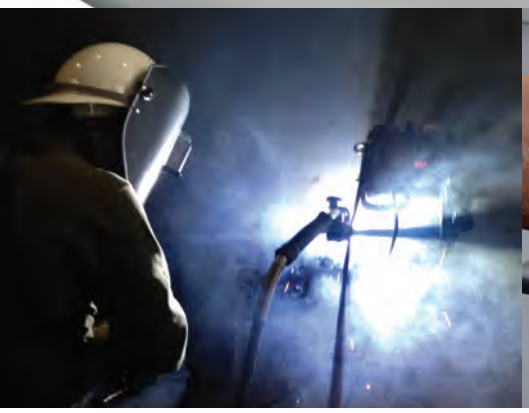

©2023 STEELMAX