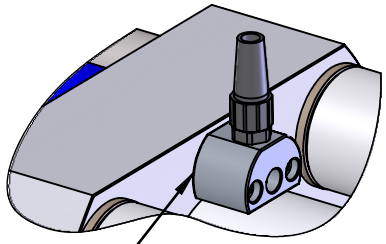

SHIFT SENSOR (3)
- **OIL** FAILED O-RING
  INCORRECTLY TORQUED BOLTS

HOSE FITTING (5)
- **OIL** FAILED O-RING
  INCORRECTLY TORQUED BOLTS

END CAP WEEP HOLE (6)
- **HOT WATER** FAILED HP SEAL
  FAILED HP CYLINDER
- **COLD WATER** FAILED CHECK VALVE O-RING
  INCORRECT END CAP TORQUE

END BELL/HYDRAULIC CYLINDER INTERFACE (2)
- **OIL** PINCHED OR FAILED O-RING
  INCORRECTLY TORQUED TIE RODS
  DAMAGED O-RING SURFACE

CHECK VALVE WEEP HOLE (10)
- **HOT WATER** LOOSE OUTLET BODY
  FAILED POPPET SEAT

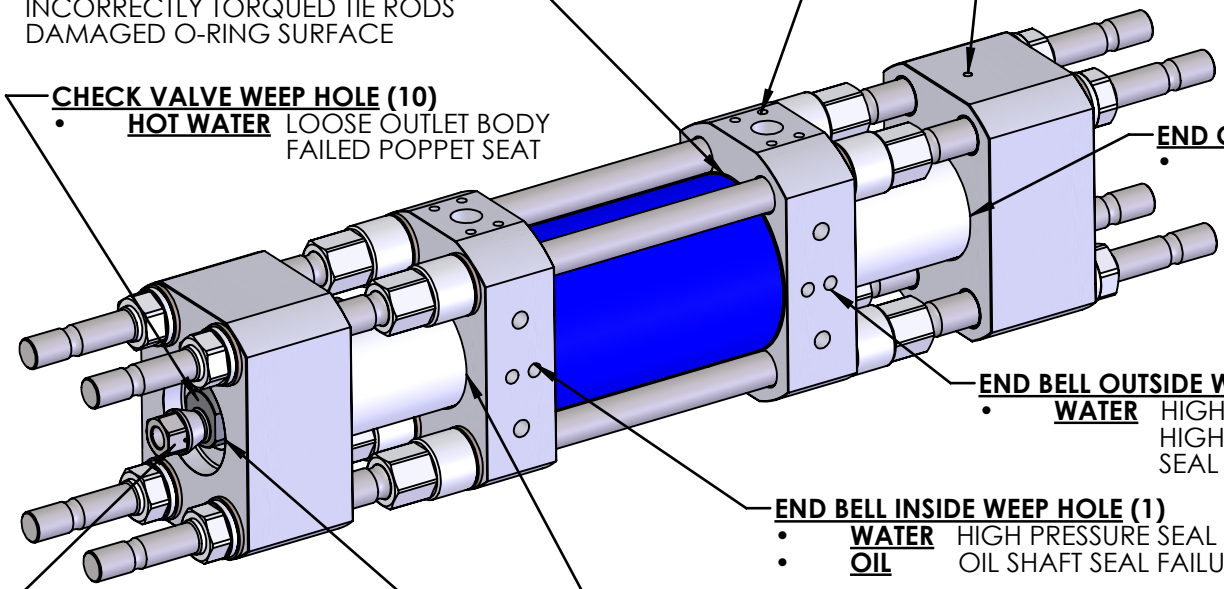

END CAP/HP CYLINDER INTERFACE (8)
- **WATER** HIGH PRESSURE CYLINDER FAILURE
  CHECK VALVE BODY FAILURE
  INCORRECT END CAP TORQUE

END BELL OUTSIDE WEEP HOLE (4)
- **WATER** HIGH PRESSURE SEAL FAILURE
  HIGH PRESSURE CYLINDER FAILURE
  SEAL CARRIER FAILURE

END BELL INSIDE WEEP HOLE (1)
- **WATER** HIGH PRESSURE SEAL FAILURE
- **OIL** OIL SHAFT SEAL FAILURE

END BELL/HP CYLINDER INTERFACE (11)
- **WATER** SEAL CARRIER FAILURE
  HIGH PRESSURE CYLINDER FAILURE

END CAP/CHECK VALVE INTERFACE (9)
- **COLD WATER** FAILED CHECK VALVE O-RING

OUTLET BODY WEEP HOLE (7)
- **HOT WATER** LOOSE HP FITTING
  FAILED CONE SEAT ON HP TUBING
- **HOT TO TOUCH** FAILED OUTLET CHECK VALVE

AHB Tooling & Machinery, Inc.
ISO Certified
Complete Metalworking Solutions
(800) 991-4225
www.ahbinc.com
Roseville Saginaw & Jackson, MI
customerservice@ahbinc.com