CATALOG SECTIONS

	Alignment Pins	1-33
	Hoist Rings	34-54
	Handles, Knobs, and Screw Clamps	55-115
	Spring-Loaded Devices	116-139
	Supports, Rests, and Feet	140-165
	Locators	166-171
	Clamps and Accessories	172-249
	Plug Gages	250-253
	Threaded Inserts	254-260
	Jig and Fixture Bases	261-288
	Chuck Jaws	1-42 CJ
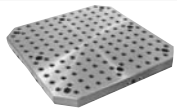	Modular Fixturing	1-64 MF
	Toggle Clamps	1-82 TC
	Drill-Jig Bushings	1-72 BU
	SWIFTSURE Power Workholding	1-128 SW

Carr Lane®
MANUFACTURING CO.
4200 Carr Lane Ct., P.O. Box 191970
St. Louis, Missouri 63119-7970 USA
Phone: 314-647-6200, FAX: 314-647-5736
Web Site: www.carrlane.com

New Items in Our Complete Line

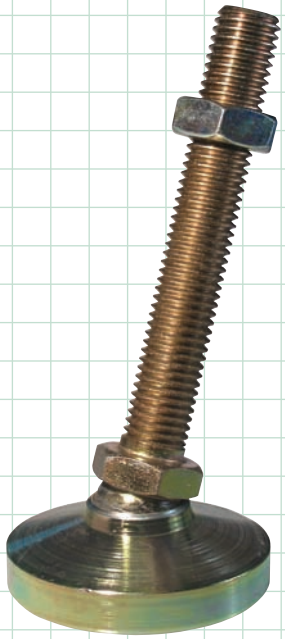

Leveling Feet

With Extra-Long Studs

Our high-quality, heavy-duty Leveling Feet are now available with extra-long studs. Thread sizes range from #10-32 to 1"-8, all in a wide range of materials and finishes.

Page 145

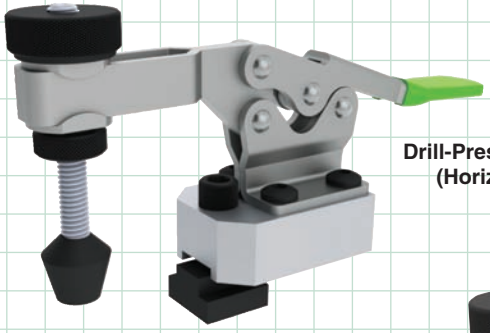

Drill-Press Toggle Clamps (Horizontal Handle)

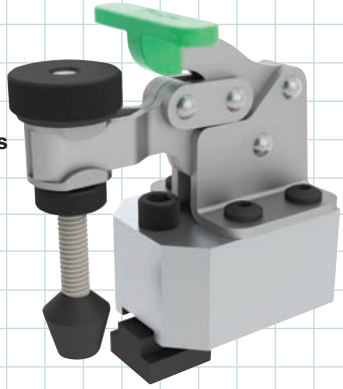

Drill-Press Toggle Clamps (Vertical T Handle)

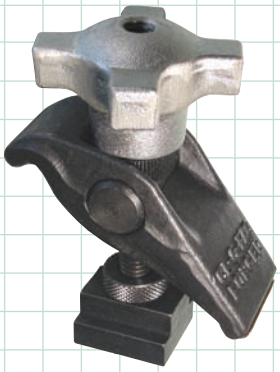

Forged Adjustable Drill-Press Clamps

Drill-Press Clamps

These new types of hold-down clamps are specifically designed for clamping on drill presses with table slots. The horizontal-handle and vertical-T-handle toggle clamps shown here are ideal for drill press clamping, with an adaptor base and a quick-adjusting spindle. Forged Adjustable Clamps are also ideal for drill-press clamping. These rugged forged steel pivot clamps provide instant height adjustment without blocks or shims.

Pages 242-243

Swivel Hand-Knob Assemblies

Hand-knob assembly with a captive, freely rotating washer to prevent marring in clamping applications. Four-prong design provides a firm grip for applications requiring quick tightening and high torque.

Page 60

Carr Lane MANUFACTURING CO.
4200 Carr Lane Ct., P.O. Box 191970
St. Louis, Missouri 63119-7970 USA
Phone: 314-647-6200, FAX: 314-647-5736
Web Site: www.carrlane.com

Additional Sizes

Now Also Available in Stainless Steel

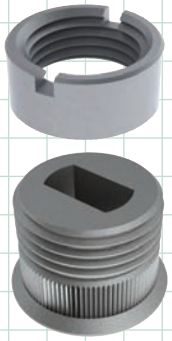

New Template Type

New Locating Tools for Knurled Bushings

Slotted Locator Bushings

Our extensive selection of Slotted Locator Bushings now includes additional diameters, many popular sizes available in stainless steel, new threaded template bushings for template jigs, and handy locating tools for potting knurled Slotted Locator Bushings.

Pages 5-7

Vertical Handle

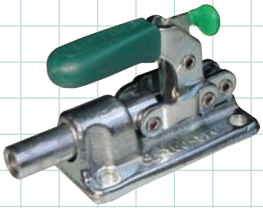

Plunger Type

Toggle Clamps with Safety Lock

Now Also Available in Stainless Steel

Several types and sizes of our safety-lock toggle clamps are now also offered in stainless steel, for corrosive environments.

Pages 17TC, 19TC, 43TC

L Pins and T Pins

Additional Sizes

Our popular L-handle and T-handle jig pins are now available in additional diameters.

Page 1

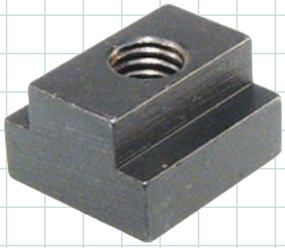

T Nuts

Additional Sizes

Our selection of T Nuts is already the largest available anywhere, and now also includes sizes for very small T slots.

Page 223

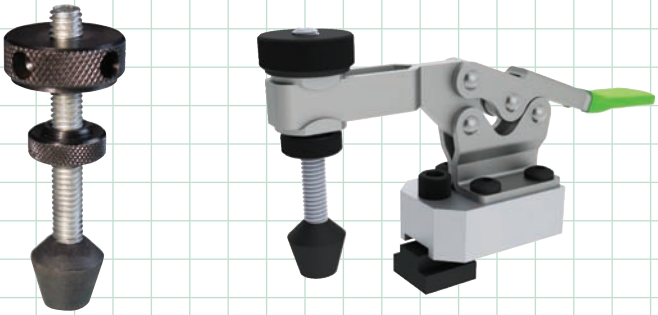

Quick-Adjusting Spindles for Toggle Clamps

These Flat-Cushion Spindles includes two knurled nuts, instead of hex jam nuts, for convenient hand tightening. Use for quick spindle adjustment in applications where high-torque tightening with a wrench is not required.

Page 79TC

Carr Lane®
MANUFACTURING CO.
4200 Carr Lane Ct., P.O. Box 191970
St. Louis, Missouri 63119-7970 USA
Phone: 314-647-6200, FAX: 314-647-5736
Web Site: www.carrlane.com

PICTORIAL INDEX

Alignment Pins

L PINS, T PINS & JIG PINS

L Pins p. 1

T Pins p. 1

Shoulder Pins p. 2

Jig Pins p. 2

Locking L Pins p. 3

Locking T Pins p. 3

Locking Pin Bushings p. 3

CLAMPING PINS

Clamping Pins p. 4

Locking Clamping Pins p. 4

SLOTTED LOCATOR BUSHINGS

Press Fit p. 5-6

Knurled p. 6

Template Type p. 7

BALL LOCK PINS

Technical Information pp. 8-9

Ball Lock Pins pp. 10-11

Marine Ball Lock Pins p. 13

Heavy-Duty Ball Lock Pins pp. 14-15

Adjustable Ball Lock Pins pp. 16-17

Double-Acting Ball Lock Pins pp. 18-19

Lifting Pins p. 20

Ball Lock Receiver Caps p. 21

BALL LOCK MOUNTING SYSTEM

Ball Lock Clamps p .22

Ball Lock Liner Bushings p. 23

Ball Lock Receiver Bushings p. 24

DETENT PINS

Detent Pins p. 25

Marine Detent Pins p. 26

Threaded Detent Pins p. 27

EXPANDING PINS

Hex Head p. 28

Cam Handle p. 29

CABLE

Cable Assemblies pp. 30-31

Cable p. 32

Ferrules p. 32

Terminals p. 32

Cable Tabs p. 33

Cable Rings p. 33

Crimping Tools p. 33

ALSO SEE: Hand-Retractable Plungers (Spring-Loaded Devices) pp. 126-133

ALSO SEE: Index Plungers (Spring-Loaded Devices) pp. 134-136

Carr Lane®
MANUFACTURING CO.
4200 Carr Lane Ct., P.O. Box 191970
St. Louis, Missouri 63119-7970 USA
Phone: 314-647-6200, FAX: 314-647-5736
Web Site: www.carrlane.com

Hoist Rings

Hoist Ring Safety Precautions
p. 34

Swivel Hoist Rings
pp. 36-46

Side-Pull Swivel Hoist Rings
pp. 47-48

Pivoting Hoist Rings
pp. 49-50

Lifting Eyes
p. 52

Hoist Ring Accessories
pp. 53-54

ALSO SEE: Lifting Pins (Alignment Pins)
p. 20

Handles, Knobs, and Screw Clamps

FLUTED KNOBS

Palm-Grip Hand Knobs/ Aluminum
p. 55

Fluted Knobs/ Phenolic
p. 56

Fluted Knobs/ Thermoplastic
p. 57

Star Knobs/ Thermoplastic
p. 58

Star Knobs/ Cushion Grip
p. 58

BFOUR-PRONG KNOBS & SCREW CLAMPS

Hand Knobs/ Aluminum
p. 59

Hand Knobs/ Cast Iron
p. 59

Hand Knobs/ Stainless Steel
p. 64

Hand Knob Assemblies
p. 61

Swivel Hand Knob Assemblies
p. 60

Knob Shoe Assemblies
p. 61

(continued)

Bar-Lok Quick-Acting Screw Clamps
pp. 70-71

Quick-Acting Knobs
p. 72

Four-Prong Knobs/ Phenolic
pp. 62-63

Four-Prong Knobs/ Thermoplastic
p. 63

Three-Prong Knobs
p. 65

T-HANDLE KNOBS

T-Handle Knobs
p. 66

ALSO SEE: Clamping Pins (Alignment Pins)
p. 4

BAR-HANDLE KNOBS & SCREW CLAMPS

Bar-Handle Screw Clamps
p. 68

Bar-Handle Nuts
p. 69

Bar-Lok Quick-Acting Screw Clamps
pp. 70-71

Bar Knobs
p. 69

ALSO SEE: Bar-Lok Quick-Acting C Clamps (Clamps & Accessories)
p. 236

(continued)

Carr Lane®
MANUFACTURING CO.
4200 Carr Lane Ct., P.O. Box 191970
St. Louis, Missouri 63119-7970 USA
Phone: 314-647-6200, FAX: 314-647-5736
Web Site: www.carrlane.com

KNURLED KNOBS & SCREW CLAMPS

Knurled-Head Screws
p. 73

Swivel Head Screws
pp. 75-76

Knurled Knobs
p. 78

Quick-Acting Knurled Knobs
p. 72

Adjustable-Torque Thumb Screws
p. 79

Adjustable-Torque Knobs
p. 78

Knurled Knobs (Plastic)
p. 80

ALSO SEE: Knurled Nuts (Clamps and Accessories)
p. 214

SOCKET-HEAD SCREW CLAMPS

Swivel Screw Clamps
pp. 74, 76

ALSO SEE: Jig Feet Leveling (Supports, Rests, and Feet)
p. 146

ALSO SEE: Gripper Swivel Contact Bolts (Supports, Rests, and Feet)
p. 154

ALSO SEE: Gripper Swivel Screws (Supports, Rests, and Feet)
pp. 155-156

Feet For Swivel Screws
p. 77

LATCH SCREWS

Quarter-Turn Screws
p. 67

Half-Turn Screws
p. 68

HAND WHEELS

Hand-Wheel Modifications
p. 81

Cast Iron
pp. 82-83

Aluminum
pp. 82, 84

Stainless Steel
p. 85

Thermoplastic
pp. 86-89

Phenolic
pp. 90-91

Solid Handles
p. 92

Revolving Handles
pp. 93-95

LEVER HANDLES & CRANK HANDLES

Lever Handles and Lever Bars
pp. 96-97

Speed Ball Handles
p. 98

Crank Handles
p. 98

Balanced Crank Handles
p. 99

Crank Handles Thermoplastic
p. 100

ADJUSTABLE HANDLES

Steel Body & Plastic Handle
p. 101

Stainless Body & Plastic Handle
p. 102

Steel Body & Zinc Handle
p. 103

Adjustable Lever Handles
pp. 104-105

KNOB HANDLES

Ball Knobs
pp. 106-108

Oval Ball Knobs
p. 107

Oval Tapered Knobs
p. 109

Tapered Knobs
p. 110

Palm-Grip Handles
p. 110

Knob Handles
p. 111

Tapered Knobs and Handles
p. 112

Pull Knobs
p. 113

T Handles
p. 113

Pull Handles
pp. 114-115

Carr Lane®
MANUFACTURING CO.
4200 Carr Lane Ct., P.O. Box 191970
St. Louis, Missouri 63119-7970 USA
Phone: 314-647-6200, FAX: 314-647-5736
Web Site: www.carrlane.com

Spring-Loaded Devices

SPRING PLUNGERS

Spring Plungers
pp. 116-117

Short Spring Plungers
p. 118

Short Spring Plungers with Extended Travel
p. 119

Press-Fit Spring Plungers
p. 120

BALL PLUNGERS

Technical Information
p. 121

Ball Plungers
pp. 122-123

Press-Fit Ball Plungers
p. 124

Ball Detents
p. 125

Plunger Wrenches
p. 125

HAND-RETRACTABLE PLUNGERS

Knurled Head
p. 126

Threaded Stud for Knob Handle
p. 127

Pull Ring/ Locking Type
p. 128

Pull Ring/ Non-Locking Type
p. 129

L Handle/ Short Stroke
p. 130

L Handle/ Long Stroke
p. 131

Knob Handle
p. 132

Knob Handle with Mounting Plate
p. 133

INDEX PLUNGERS

Tapered Index Plungers
pp. 134-136

Straight Index Plungers
pp. 134-136

SPRING STOP BUTTONS

Contact Button
p. 137

Flat Face
p. 138

Flat Face with Tang
p. 138

ALSO SEE: Spring-Stop Button Adaptors (Modular Fixturing)
p. 49MF

SPRING LOCATING PINS

Steel Pin/ Coil Spring
p. 140

Stainless Pin/ Polyurethane Spring
pp. 140-142

Delrin Pin/ Polyurethane Spring
pp. 140-142

Tapped Receptacle
p. 143

Eccentric Liners
p. 143

ALSO SEE: Adjustable-Torque Thumb Screws (Handles, Knobs, and Screw Clamps)
p. 79

ALSO SEE: Adjustable-Torque Knobs (Handles, Knobs, and Screw Clamps)
p. 78

ALSO SEE: Torque Screw Jacks (Supports, Rests, and Feet)
p. 47MF

Carr Lane®
MANUFACTURING CO.
4200 Carr Lane Ct., P.O. Box 191970
St. Louis, Missouri 63119-7970 USA
Phone: 314-647-6200, FAX: 314-647-5736
Web Site: www.carrlane.com

Supports, Rests, and Feet

LEVELING FEET

Leveling Feet
p. 144

Stud Leveling Feet
p. 145

Jig Leveling Feet
p. 146

Jig Feet Leveling Assemblies
p. 146

Threaded Tube Ends
p. 147

SWIVEL PADS

Swivel Pads
p. 148

Swivel Pad Feet
p. 149

Swivel Nuts
p. 148

Swivel Contact Bolts
p. 157

GRIPPERS

Round Grippers (Serrated)
p. 150

Round Grippers (Flat)
p. 150

Square Grippers
p. 151

Edge Grippers
p. 152

Gripper Contact Bolts
p. 153

Gripper Swivel Contact Bolts
p. 154

Gripper Swivel Pads
p. 156

Gripper Swivel Screws
p. 153

REST BUTTONS & PADS

Rest Buttons
p. 158

Jig Rest Buttons
p. 158

Screw Rest Pads
p. 159

Screw Rest Buttons
p. 159

Spherical-Radius Locator Buttons
p. 157

Jig Leg Plates
p. 161

(continued)

Heavy-Duty Rest Pads
p. 161

Drill Jig Feet
p. 160

Double-End Jig Feet
p. 160

ALSO SEE: Height Shims (Modular Fixturing)
p. 38MF

Manual Work Supports
p. 162

SCREW JACKS

Knurled Screw Jacks
p. 163

Torque Screw Jacks
p. 163

Adjustable Locating Buttons
p. 163

Heavy-Duty Screw Jacks
p. 164

Eccentric Leveling Lugs
p. 165

ALSO SEE: Modular Supports & Locators (Modular Fixturing)
p. 2MF

Carr Lane®
MANUFACTURING CO.
4200 Carr Lane Ct., P.O. Box 191970
St. Louis, Missouri 63119-7970 USA
Phone: 314-647-6200, FAX: 314-647-5736
Web Site: www.carrlane.com

Locators

CONSTRUCTION BALLS

Construction Balls/ Shoulder Type
p. 172

Construction Balls/ Adjustable Type
p. 173

Construction-Ball Pads
p. 174

Construction-Ball Covers
p. 174

FIXTURE KEYS

Fixture Keys
p. 175

Step Fixture Keys
p. 175

Sure-Lock Fixture Keys
p. 176

(continued)

Reamed-Hole Fixture Keys
p. 176

Locating Keys
p. 177

Subplate Locating Keys
p. 177

Pallet Fixture Keys
p. 178

Mill Fixture Keys
p. 178

ALSO SEE:
Ball Lock Mounting System (Alignment Pins)
pp. 22-24

ALSO SEE:
Fixture Locating Pins (Modular Fixturing)
p. 33MF

LOCATING PINS

Round & Diamond Pins
p. 167

Round & Diamond Locating Pins
pp. 168-169

Floating Locating Pins
p. 166

Bullet-Nose Dowels
p. 170

Cone Locator Pins
p. 170

Bullet-Nose Round & Diamond Pins
p. 171

ALSO SEE:
Bore Clamps
(Please see our web catalog)

ALSO SEE:
Quick-Change Mounting Systems
(Please see our web catalog)

Carr Lane®
MANUFACTURING CO.
4200 Carr Lane Ct., P.O. Box 191970
St. Louis, Missouri 63119-7970 USA
Phone: 314-647-6200, FAX: 314-647-5736
Web Site: www.carrlane.com

Clamps and Accessories

CLAMP STRAPS

Forged Adjustable Clamps
p. 179

Aluminum Adjustable Clamps
p. 179

Slotted-Heel Clamp Straps
pp. 181, 184, 186

Tapped-Heel Clamp Straps
pp. 187-189, 194

Swivel-Heel Clamp Straps
p. 195

Double-End Clamp Straps
p. 196

Drill-Spot-Heel Clamp Straps
See website

Step Blocks & Clamps
pp. 198-199

Forged U Clamps
p. 180

ALSO SEE: High-Rise Clamps (Modular Fixturing)
pp. 52-53MF

EDGE CLAMPS

Tiny Vise Edge Clamps
pp. 200-201

(continued)

Tiny Vise Double Edge Clamps
pp. 202-203

Serrated Adjustable Edge Clamps
p. 204

Serrated Fixed Edge Clamps
p. 205

Serrated Double Edge Clamps
p. 206

Cam Edge Clamps
p. 207

ALSO SEE: Pivoting Edge Clamps (Modular Fixturing)
p. 59MF

ALSO SEE: Toggle Edge Clamps (Toggle Clamps)
p. 55TC

ALSO SEE: Hydraulic Edge Clamps (SWIFTSURE Power Workholding)
p. 29SW

SWING CLAMPS

Hook Clamps
pp. 209-211

Swing Clamp Assemblies
pp. 212-213

Up-Thrust Clamps
p. 208

ALSO SEE: Hydraulic and Air-Powered Swing Clamps (SWIFTSURE Power Workholding)
pp. 17-27SW

NUTS

Acorn Nuts
p. 214

Knurled Nuts
p. 214

Knurled Check Nuts
p. 214

Hex Nuts
p. 215

Jam Nuts
p. 215

Flange Nuts
p. 216

Coupling Nuts
p. 216

Spherical Nuts & Washers
p. 217

ALSO SEE: Bar-Handle Nuts (Handles, Knobs, and Screw Clamps)
p. 69

ALSO SEE: Bar Knobs (Handles, Knobs, and Screw Clamps)
p. 69

WASHERS

Spherical Washers
p. 217

C Washers
p. 219

Swing C Washers
p. 219

Flat Washers
p. 218

Knurled-Face Washers
p. 218

ALSO SEE: Flanged Washers (Toggle Clamps)
p. 82T

Carr Lane®
MANUFACTURING CO.
4200 Carr Lane Ct., P.O. Box 191970
St. Louis, Missouri 63119-7970 USA
Phone: 314-647-6200, FAX: 314-647-5736
Web Site: www.carrlane.com

STUDS, BOLTS, AND T NUTS

Studs
pp. 221-222

Eye Bolts
p. 228

Swing Bolts
p. 229

T Nuts
p. 223

Rotary T Nuts
p. 225

T-Slot Bolts
p. 227

T Bolts
p. 226

Shoulder Screws
p. 220

CAMS

Cam Handles
p. 230

ALSO SEE:
Clamp-Strap Assemblies with Cam Handles
pp. 183, 186, 195, 196

ALSO SEE:
Cam Edge Clamps
p. 207

ALSO SEE:
Vertical-Handle Cam Clamps (Toggle Clamps)
p. 26TC

CLAMP RESTS & ACCESSORIES

Clamp Rests
p. 231

Guide Blocks
p. 232

Clamp Springs
p. 232

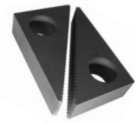

Step Blocks
p. 198

ALSO SEE:
Stud Leveling Feet (Supports, Rests, and Feet)
p. 145

CLAMPING KITS

Step Block & Clamp Sets
p. 199

T Nut & Stud Sets
p. 224

Rotary T-Nut & Stud Sets
p. 225

T-Slot Bolt Kits
p. 227

Clamping Kits
p. 223

Deluxe Clamping Kits
pp. 234-235

PORTABLE CLAMPS

Bar-Lok Quick-Acting C Clamps
p. 236

Plastic C Clamps
p. 237

Swing C Clamps
p. 238

Shark Clamps
p. 239

Also see Forged Toggle Pliers (Toggle Clamps)
pp. 65-67TC

Also see Toggle Bar Clamps (Toggle Clamps)
p. 68TC

Dril-Press Clamps
pp. 242-243

HAMMERS & HAND TOOLS

Simplex Hammers
pp. 244-246

No-Rebound Hammers
pp. 247-249

No-Mar Aluminum Hammers
p. 241

Soft-Face Punches
p. 249

T-Slot Cleaners
p. 224

Carr Lane®
MANUFACTURING CO.
4200 Carr Lane Ct., P.O. Box 191970
St. Louis, Missouri 63119-7970 USA
Phone: 314-647-6200, FAX: 314-647-5736
Web Site: www.carrlane.com

Plug Gages

Plug Gages
p. 250

Step Plug Gages
p. 250

Plug-Gage Sets
p. 251

Gage Handles & Bushings
pp. 251-253

Threaded Inserts

KEY INSERTS

Technical Information
p. 254

Key Inserts Heavy Duty
p. 255

Key Inserts Heavy Duty Internal Thread Locking
p. 256

Key Inserts Thinwall
p. 257

Key Inserts Thinwall Internal Thread Locking
p. 257

Solid Key Inserts Stainless
p. 258

(continued)

Key Insert Installation Tools
pp. 255-259

Key Insert Assortments
p. 259

Self-Tapping Threaded Inserts
p. 260

Cast Inserts
p. 260

Jig and Fixture Bases

BLANK TOOLING PLATES

Rectangular Tooling Plates
p. 261

Square Pallet Tooling Plates
p. 263

Rectangular Pallet Tooling Plates
p. 264

Vertical Tooling Plates
p. 262

ALSO SEE: Window Tooling Blocks (Modular Fixturing)
p. 24MF

BLANK TOOLING BLOCKS

Two-Sided Tooling Blocks
pp. 265-266

Window Tooling Blocks
p. 267

Three-Sided Tooling Blocks
pp. 268-269

Four-Sided Tooling Blocks
pp. 270-273

Six-Sided Tooling Blocks
p. 274

Eight-Sided Tooling Blocks
p. 275

ANGLE BRACKETS

Angle Brackets
p. 276

Gusseted Angle Brackets
p. 276

Angle Brackets with Locating Holes
p. 277

Adjustable Angles
p. 278

CarrLane® MANUFACTURING CO.
4200 Carr Lane Ct., P.O. Box 191970
St. Louis, Missouri 63119-7970 USA
Phone: 314-647-6200, FAX: 314-647-5736
Web Site: www.carrlane.com

CAST SECTIONS

T
p. 279

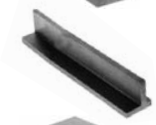
Offset T
p. 279

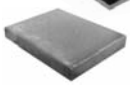
Flat
p. 279

L
p. 280

U
p. 280

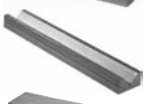
V
p. 280

Square
p. 281

Rectangular
p. 281

H
p. 281

Lift-N-C Jigs
p. 282

TRUNNIONS

Trunnions
p. 283

Spherical Trunnions
p. 283

ADJUSTABLE LOCKING HUBS

Heavy Duty/ Stainless
pp. 285-287

Medium Duty/ Plastic
p. 288

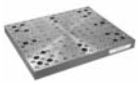
ALSO SEE: Modular Tooling Plates & Blocks (Modular Fixturing)
pp. 14-31MF

Chuck Jaws

Technical Information
pp. 1CJ

Pointed Soft Jaws
p. iiCJ
(Chuck Brand Index)

Square-Nose Soft Jaws
p. iiCJ
(Chuck Brand Index)

Pie-Shaped Soft Jaws
p. iiCJ
(Chuck Brand Index)

Single-Step Reversible Hard Jaws
p. iiCJ
(Chuck Brand Index)

Two-Step Reversible Hard Jaws
p. iiCJ
(Chuck Brand Index)

Jaw Nuts
p. iiCJ
(Chuck Brand Index)

Keys
p. iiCJ
(Chuck Brand Index)

Modular Fixturing

Technical Information
pp. 1-7MF

Toolrooom Starter Sets
pp. 8-13MF

Modular Tooling Plates & Blocks
pp. 14-27MF

Quick-Change Modular Tooling Plates & Blocks
pp. 28-31MF

Modular Mounting Accessories
pp. 32-33MF

Modular Supports & Locators
pp. 34-49MF

Modular Clamps
pp. 50-63MF

Modular Power Workholding
pp. 64MF

Carr Lane® MANUFACTURING CO.
4200 Carr Lane Ct., P.O. Box 191970
St. Louis, Missouri 63119-7970 USA
Phone: 314-647-6200, FAX: 314-647-5736
Web Site: www.carrlane.com

Toggle Clamps

Technical Information
p. iiTC

Horizontal-Handle Toggle Clamps
p. 3TC (Index)

Vertical-Handle Toggle Clamps
pp. 13-14TC (Index)

Push/Pull Toggle Clamps
p. 41TC (Index)

Toggle Edge Clamps
p. 54TC (Index)

Latch-Action Toggle Clamps
p. 56TC (Index)

Toggle Pliers
p. 64TC (Index)

Air-Powered Clamps
p. 69TC (Index)

Toggle Clamp Accessories
pp. 78-82TC

Drill Bushings

Technical Information
pp. 2-8BU

Press-Fit Bushings
pp. 9-20BU

Renewable Bushings
pp. 21-27BU

Liner Bushings
pp. 28-33BU

Lockscrews and Clamps
pp. 34-35BU

Castable Bushings
pp. 43-47BU

Chip-Breaker Bushings
pp. 36-37BU

Directed-Coolant Bushings
pp. 38-39BU

Oil-Groove Bushings
pp. 40-42BU

Gun-Drill Bushings
pp. 54-56BU

Template Bushings
pp. 48-51BU

Air-Feed Bushings
pp. 57-71BU

SWIFTSURE Power Workholding

Product Features, Design Information, and Safety Precautions
pp. 2-11SW

Clamps & Cylinders
pp. 12-13SW (Index)
p. 30SW (Index)
p. 44SW (Index)

Work Supports
p. 47SW (Index)

Power Vises
p. 59SW (Index)

Power Sources
p. 73SW (Index)

Valves
p. 86SW (Index)

Fittings & Accessories
p. 100SW (Index)

Carr Lane® MANUFACTURING CO.
4200 Carr Lane Ct., P.O. Box 191970
St. Louis, Missouri 63119-7970 USA
Phone: 314-647-6200, FAX: 314-647-5736
Web Site: www.carrlane.com

ALPHABETICAL INDEX

KEY TO PAGE NUMBERS

Section 1. Main Catalog 1-288
Section 2. Chuck Jaws 1-42CJ
Section 3. Modular Fixturing 1-64MF
Section 4. Toggle Clamps 1-82TC
Section 5. Drill Jig Bushings 1-72BU
Section 6. Power Workholding 1-128SW

A

Accessories, Toggle Clamp 78-82TC
Accumulators . . . . . See website
Acme-Serrated Keys (AK) 21CJ
Acorn Nuts (AN) 214
Adjustable Angles (AA) 278
Adjustable Ball Lock Pins (ABP) 16-17
Adjustable Clamps, Aluminum 179
Adjustable Clamps, Forged 205, 58MF
Adjustable Clamps, Serrated 204, 60-61MF
Adjustable Handles (AH, AHP) 101-103
Adjustable Lever Handles (ALH) 104-105
Adjustable Locking Hubs (ALH) 285-288
Adjustable Locating Buttons 163
Adjustable Screw Clamps 62MF
Adjustable Stops 48MF
Adjustable Swing Stops 48MF
Adjustable-Torque Knobs (ATK) 78
Adjustable-Torque Thumb Screws 79
Air-Control Accessories (ACV, AED, AFC) 77TC, 118SW
Air Feed Bushings (A) 57-68BU
Air-Feed Lockscrews (AFL) 69BU
Air Fittings (AF) 77TC, 121SW
Air Power Units (AP) 79-80.1SW
Air-Powered Swing Clamps (ASC, ASCA) 26-27SW
Air-Powered Toggle Clamps 69-77TC
Aluminum Adjustable Clamps 179
Aluminum Chuck Jaws 1-39CJ
Aluminum Goose-Neck Clamp Straps (AGNS) 193
Aluminum Hand Knobs 55, 59
Aluminum Hand Wheels 82
Aluminum Locator-Nose Clamp Straps (ALCS) 193
Aluminum Straight Clamp Straps (ASCS) 193
Anchor Shackles 53
Angle Brackets (AB, ABA, ABK, ABLB) 276-277
Angle Brackets, Gussetted 276
Angle Plates 20MF, 27MF
Angle Tooling Plates 20MF
Angles, Adjustable 278
Angles, Cast Section 279-281
Assemblies, Cable 31
Assemblies, Cam-Type Clamp 196
Assemblies, Double-End Clamp 196, 51MF
Assemblies, Hand Knob 60
Assemblies, Hook Clamp 209-211, 57MF
Assemblies, Jig-Feet Leveling 146
Assemblies, Knob Shoe 60
Assemblies, Plain-Nose Slotted-Heel Clamp 184
Assemblies, Plug-Gage 252
Assemblies, Slotted-Heel Clamp 182-184, 50MF
Assemblies, Step Plug-Gage 252-253
Assemblies, Straddle-Cam Clamp 183
Assemblies, Swing Clamp 208, 213, 56MF
Assemblies, Swivel-Heel Clamp 195
Assemblies, Tapered-Nose Clamp 190
Assemblies, Tapped-Heel Clamp 188-189
Assemblies, Wide-Nose Clamp 191
Automotive Clamps 28-31TC
Automatic Coupling Systems 111-115SW
Automatic Toggle Clamps
(AHTC, ATC, ATEC) 10TC, 27TC, 55TC
Automatic Toggle Edge Clamps (ATEC) 55TC

B

Backstops, Locating 39-41MF
Balanced Crank Handles 99
Ball Detents (BD) 125
Ball Knobs 106-108
Ball Lock Clamps (BLS) 23
Ball Lock Liner Bushings (BLL, BLT) 23
Ball Lock Mounting System 22-24
Ball Lock Pins (BLH, BLP, BPD) 8-19
Ball Lock Receiver Bushings (BLRC, BLRV) 24
Ball Lock Receiver Caps (BLCR) 21
Ball Plungers (BP) 123-125
Balls, Construction 172
Balls, Plastic 106-107
Bar Clamps, Cam 241
Bar Clamps, Toggle 68TC
Bar-Handle Screw Clamps (BHS) 68
Bar-Handle Nuts (BHN) 69
Bar Knobs (BK) 69
Bar-Lok Quick-Acting C Clamps (BLC) 236
Bar-Lok Quick-Acting Screw Clamps
(BL, BLK, BLM, BLT) 70-71
Bases, Gang Mill Fixture . . . . . See website
Bases, Mill Fixture . . . . . See website
Blank Tooling Blocks . . . . . See website
Blank Tooling Plates 261-264, 23MF
Blank Top Jaws 1-39CJ
Block Clamps (BC, BCA, BCD) 38-39SW, 46SW
Block Pull Clamps (BC) 46SW
Block Push Clamps (BC, BCA, BCD) 38-39SW
Blocks, Four-Sided Tooling 22MF
Blocks, Guide 232
Blocks, Riser 34-35MF, 54MF
Blocks, Sideways Mounting 34MF
Blocks, Step (BS, BSH) 199
Blocks, Two-Sided Tooling 21MF
Blocks, V 280, 44-45MF
Bodies for Swivel Screws (BSS) 76
Bolt Retainers (BR) 82TC
Bolts, Angle Bracket Locating 276
Bolts, Contact 153, 155, 55MF, 128SW
Bolts, Eye 228
Bolts, Latch (See Swing Bolts) 229
Bolts, Swing 229
Bolts, T 226

Bolts, T-Slot 227
Brackets, Angle 276-277
Bullet-Nose Dowels and Bushings (B, BND) 170
Bullet-Nose Pins and Bushings (B, BDP, BRP) 171
Bushings, Air Feed 57-71BU
Bushings, Bullet-Nose Dowel Pin (B) 170
Bushings, Chip Breaker 36-37BU
Bushings, Circuit Board . . . . . See website
Bushings, Cone Locator Pin 170
Bushings, Diamond Groove 43-44BU
Bushings, Directed Coolant 38-39BU
Bushings, Drill Jig 1-72BU
Bushings, EZ Cast 47BU
Bushings, Gage Handle 251
Bushings, Gun Drill 54-56BU
Bushings, Head Liner 31-32BU
Bushings, Head Press Fit 14-18BU
Bushings, Liner 28-30BU
Bushings, Locating. 32MF
Bushings, Locating Pin 168-171
Bushings, Oil Groove 40-42BU
Bushings, Press Fit 9-13BU
Bushings, Serrata Groove 45BU
Bushings, Serrated Press Fit 19-20BU
Bushings, Slip/Fix Renewable 21-25BU
Bushings, Slotted Locator 6
Bushings, Straight Index Plungers 136
Bushings, Tapered Index Plungers 136
Bushings, Template 48-49BU
Bushings, Unilock Liner 33BU
Bushings, Unilock Liner, Diamond Knurl 46BU
Buttons, Adjustable Locating 163
Buttons, Jig Rest 158
Buttons, Rest 158
Buttons, Screw Rest 159
Buttons, Spherical-Radius Locator 157
Buttons, Spring-Stop 137, 49MF

C

C Clamps, Bar-Lok Quick-Acting 236
C Clamps, Plastic 237
C Clamps, Swing. 238
C Washers (CW) 219
C Washers, Swing 219
Cable Assemblies 31
Cable Rings. 33
Cables (C) 32
Cable Tabs 33
Cam-Action Hold-Down Clamps. 26TC
Cam Bar Clamps (CBC) 241
Cam Edge Clamps. 207, 58MF
Cam Handles 207
Cam-Type Clamp Straps 183, 186, 195-196
Cams, Double (CH). 230
Cams, Single (CH) 230
Cap Screws, Hex-Head 33MF
Cap Screws, Socket-Head. 32MF
Cast Inserts 260
Cast Sections 279-281
Check Nuts, Knurled 214
Check Valves, Air 77TC
Check Valves, Hydraulic 95-96SW, 98SW
Chip Breaker Drill Bushings (CH, CHM). 36-37BU
Chuck Jaw Keys 22-23CJ, 25CJ
Chuck Jaws, Aluminum 1-39CJ
Chuck Jaws, Hard 1-39CJ
Chuck Jaws, Pie-Shaped 1-39CJ
Chuck Jaws, Soft. 1-39CJ
Chuck Jaws, Special . . . . . See website
Circuit Board Drill Bushings (CB, CBC) . . . . . See website
Clamp Assemblies, Cam-Type 183
Clamp Assemblies, Double-End 51MF
Clamp Assemblies, Hook (CA, CAC) 209-210, 57MF
Clamp Assemblies, Slotted-Heel 182-184, 186, 50MF
Clamp Assemblies, Swing 179-184, 186, 192-193,
. . . . . 208, 212-213, 56MF
Clamp Assemblies, Swivel Heel 195
Clamp Assemblies, Tapered-Nose 190
Clamp Assemblies, Tapped-Heel 188-189, 194
Clamp Assemblies, Wide-Nose 191
Clamp Heels (See Clamp Rests) 231
Clamp Rest Screws (CRS) 231
Clamp Rests (CR). 231
Clamp Riser Blocks 34MF
Clamp Springs. 232
Clamp Strap Assemblies 182, 184, 188-189,
. . . . . 190-191, 196, 50-51MF
Clamp Straps, Aluminum Gooseneck 193
Clamp Straps, Aluminum Locator-Nose 193
Clamp Straps, Aluminum Straight 193
Clamp Straps, Cam-Type (CS) 183
Clamp Straps, Double-End (CS) 208, 51MF
Clamp Straps, Forged Gooseneck 192
Clamp Straps, Forged Radius 192
Clamp Straps, Forged Straight 192
Clamp Straps, Locator Nose 192-193
Clamp Straps, Slotted-Heel (CS) 180-186, 50MF
Clamp Straps, Swivel-Heel (CS). 195
Clamp Straps, Tapered-Nose 190
Clamp Straps, Tapped-Heel (CS). 187-189
Clamp Straps, Tapped-Heel Padded. 194
Clamp Straps, U-Shaped 180
Clamp Straps, Wide-Nose 191
Clamping Kits (CK, CKH, CKMH). 233, 235
Clamping Pins (CP) 4
Clamping Valves 87-89.1SW
Clamps, Air-Powered 71-80TC, 26-27SW
Clamps, Aluminum Adjustable 178
Clamps, Automotive 28-31TC
Clamps, Ball Lock 22-23
Clamps, Bar 163, 68TC
Clamps, Block. 38-40SW, 46SW
Clamps, Bushing. 34-35BU
Clamps, C 236-238
Clamps, Cam-Action Hold-Down 26TC
Clamps, Cam Edge. 207
Clamps, Cam Bar 241
Clamps, Drill-Press 242-243
Clamps, Edge 200-207, 58-60MF, 29-31SW
Clamps, Extending 13.1-13.6SW
Clamps, Flat. 35BU
Clamps, Forged Adjustable 179, 58MF
Clamps, Forged Screw 180
Clamps, Forged Strap. 179, 180, 192, 209
Clamps, Forged U 180
Clamps, Handscrew 239
Clamps, High-Rise 52-54MF
Clamps, Hook (CA, CAC) 209-210, 57MF
Clamps, Hold-Down Toggle. 3-40TC
Clamps, Hydraulic 1-128SW
Clamps, Latch Action 56-63TC
Clamps, Plain 199
Clamps, Plate 28-31TC

Clamps, Power 71-77TC, 1-128SW
Clamps, Push/Pull Toggle 41-50TC
Clamps, Quick-Acting Screw 70-71
Clamps, Round 34-35BU
Clamps, Screw 70-71, 74, 180, 62MF
Clamps, Self-Adjusting Plunger 45TC, 49TC, 53TC
Clamps, Serrated Adjustable 60MF
Clamps, Step 198-199
Clamps, Strap (CS) 179-195
Clamps, ***SWIFTSURE*** Power Workholding 1-128SW
Clamps, Swing 212-213, 56-57MF, 17-24SW
Clamps, Swivel Screw 74
Clamps, Toe 204, 60-61MF, 26-27SW
Clamps, Toggle 1-76TC, 63MF
Clamps, Tubing 123-124SW
Clamps, Up-Thrust 208, 56MF
Clevis Pins (CLVP) 230
Clinch-Lok® (See Template Bushings) 48-49BU
Clips, Hoist Ring 53
Collet Vises 71-72SW
Cone-Cushion Spindles (CC) 79TC
Concentric Clamping Elements 64-65.1SW
Cone Locator Pins and Bushings (CLP, CLB) 170
Construction-Ball Covers (CBC) 174
Construction-Ball Pads (CBP) 174
Construction Balls (CB) 173
Construction Balls, Shoulder 172
Contact-Bolt Extensions 55MF
Contact-Bolt Holders 55MF
Contact Bolts 153, 154, 157, 55MF, 128SW
Control Cylinders (CC) 116SW
Coupling Nuts (CN) 216
Couplings, Hydraulic 101-104SW, 108-109SW
Couplings, Rotary 101-102.1SW
Couplings, Rotary Valve 103-104SW
Covers, Construction-Ball (COVER) 174
Covers, Eccentric-Leveling-Lug (COVER) 165
Covers, Optical-Cup Mount . . . . . See website
Crank Handle Bodies (CHB) 99
Crank Handles (CHP) 98-101
Crank Handles, Balanced (CHB) 99
Crimping Tools (CT) 33
Cylinders, Hydraulic 34SW, 116SW
Cylinders, Riser 38MF
Cylinders, Support 40-41MF

D

Decouplers, Pallet 106SW
Delt-A-Groove® (See Diamond Groove Bushings) . . 43-44BU
Deluxe Clamping Kits (DCK, DCKN) 234-235
Detent Pins (DEP) 25
Detents, Ball 125
Diamond Groove Drill Bushings (DG, DGM) 43-44BU
Diamond Locating Pins (DLT, DPT) 168-169, 42-43MF
Diamond Pins (DP) 167, 33MF
Directed Coolant Bushings (DC) 38-39BU
Directional-Control Valves 87-90SW
Disconnects, Hydraulic Quick 119SW
Double Cams 230
Double-Acting Ball Lock Pins 18
Double Edge Clamps, Serrated 206
Double-End Clamp Straps (DEA) 196, 51MF
Double-End Jig Feet (DEJF) 160
Dowels, Bullet-Nose 170
Drill Bushings, Air Feed 57-68BU
Drill Bushings, Chip Breaker 36-37BU
Drill Bushings, Circuit Board . . . . . See website
Drill Bushings, Diamond Groove (DG) 43-44BU
Drill Bushings, Directed Coolant
(DC, DCHL, DCL) 38-39BU
Drill Bushings, EZ Cast 47BU
Drill Bushings, Gun Drill 54-56BU
Drill Bushings, Head Liner 31-32BU
Drill Bushings, Head Press Fit 14-18BU
Drill Bushings, Liner 28-30BU
Drill Bushings, Oil Groove 40-42BU
Drill Bushings, Press Fit 9-13BU
Drill Bushings, Serrata Groove 45BU
Drill Bushings, Serrated Press Fit 19-20BU
Drill Bushings, Slip/Fix Renewable 21-25BU
Drill Bushings, Template 48-51BU
Drill Bushings, Unilock Liner 33BU
Drill Bushings, Unilock Liner, Diamond Knurl 46BU
Drill Jig Feet (DJF) 160
Drill-Press Clamps 242-243
Duraclamp Plastic C Clamps (DC, DCT) 237

E

Eccentric Leveling Lugs (ELL) 165
Eccentric Leveling Lug Covers 165
Eccentric Liner 143
Edge Clamps, Cam 207, 58MF
Edge Clamps, Hydraulic (EC) 29-29.1SW
Edge Clamps, Serrated 61MF
Edge Clamps, TINY VISE™ 200-202
Edge Clamps, Toggle 54-55TC
Edge Grippers (EG) 152
Edge Supports 39MF
Electric Power Units (EP) 74-77SW
Expanding Pins (EXP, EXPH) 28-29
Extending Clamps (EX, EXA, EXD) 13.1-13.6SW
Extension Nuts (see Coupling Nuts) 216
Extension Supports 36-37MF
Eye Bolts (EB) 228
EZ Cast Drill Bushings (EZ) 47BU
EZ-Torque™ Swivel Hoist Rings 40

F

Fast-Lok™ Plate Lifting System (FLPS) 50
Feet, Double-End Jig 160
Feet, Drill Jig 160
Feet, Jig Leveling 146
Feet, Jig-Leveling Assembly 146
Feet, Leveling 144
Feet, Stud Leveling 145
Feet, Swivel Screw (FSS) 77
Ferrules (F) 32
Filter/Regulators (FR, FRL) 118SW
Filters, High-Pressure Inline 119.1SW
Finger Pins (FP) 92
Fittings, Air 77TC, 121SW
Fittings, Hydraulic (F) 115SW, 118SW, 121-122SW
Fixture Bases, Blank 261-264
Fixture Hose (FH) 64MF, 120SW
Fixture Keys (FK) 175-178
Fixture Keys, Mill . . . . . See website
Fixture Keys, Pallet . . . . . See website
Fixture Keys, Reamed-Hole 176
Fixture Keys, Step 175

Fixture Keys, Sure-Lock 176
Fixture Plates, Blank. 261-264, 23MF
Flange Nuts, (FN, FFN) 216
Flanged Washers 82TC
Flat Cast Sections 279
Flat Clamps (FC) 35BU
Flat-Cushion Spindles (FC, FCP, FCQA) 79TC
Flat-Head Socket Screws. 205-206
Flat Milled Renewable Drill Bushings (FM) 26BU
Flat Washers (FW) 218
Floating Locating Pins (FLP). 166
Flow-Control Valves, Air 118SW
Flow-Control Valves, Hydraulic 98SW
Fluid, Hydraulic (FL) 120SW
Fluid Pressure Gauges 118SW
Fluted Knobs 56-57
Foldable Revolving Handles 95
Forged Adjustable Clamps (FAC, FACA) 179, 56MF
Forged Anchor Shackles (FAS). 53
Forged Gooseneck Clamp Straps (FGNS) 192
Forged Rings (FR) 53
Forged Screw Clamps (FSC) 180
Forged Straight Clamp Straps (FSCS, FRCS) 192
Forged U Clamps (FUC) 180
Four-Prong Knobs 59-65
Four-Sided Tooling Blocks 22MF

G

Gage Handles (GHD, GHN, GHS) 251
Gages, Locating. 33MF
Gages, Plug and Step Plug (GHD, GHS) 250-253
Gauges, Force. 63SW
Gauges, Hydraulic Pressure (GA). 118SW
Gooseneck Clamp Straps. 192-193, 53MF
Gripper Contact Bolts (GCB) 153
Gripper Swivel Contact Bolts (GBF, GBFN, GSB). . . 154-155
Gripper Swivel Pads (GSP, GSPF, GSPN, GSPS) 156
Gripper Swivel Screws (GSF, GSS) 156
Grippers 150-156
Guide Blocks (GB) 232
Gun Drill Bushings
(GD, GDD, GDE, GDH, GDI, GDL) 54-56BU
Gussetted Angle Brackets (GAB) 276

H

H Cast Sections 281
Half-Turn Screws (HTS) 67
Halfway Extension Supports 37MF
Hammers, No-Rebound. 247-249
Hammers, No-Mar 241
Hammers, Simplex. 244-246
Hand-Knob Assemblies (HK-T). 61
Hand Knobs (HK, HKA) 59, 64
Hand Knobs, Palm Grip 55
Hand Pumps (HP, HPA) 81-82SW
Hand Retractable Plungers
(HRP, HRPK, HRPM, HRPT) 128-135
Hand Wheel Handles 92-95
Hand Wheels (HWAF, HWAR, HWSF, HWSS, HWTS,HWAS,
HWTR, HWSD) 82-91
Hand Wheels, Fluted. 91
Hand Wheel Modifications 81
Handles, Adjustable 101-105
Handles, Cam 230
Handles, Crank (H) 98-100
Handles, Gage 251
Handles, Hand Wheel 92-95
Handles, Knob. 111
Handles, Lever 97
Handles, Palm Grip 110
Handles, Plastic 56-58, 64-67, 80, 101-103, 106-113
Handles, Revolving 93-95
Handles, Revolving Ball 95
Handles, Speed Ball 98
Handles, Solid 92
Handles, T 113
Handles, Tapered 112
Handscrew Clamps (HSC) 240
Hard Chuck Jaws. 1-39CJ
Head Liner Drill Bushings (HL) 31-32BU
Head Press Fit Drill Bushings (H, HC, HM) 15-20BU
Heavy-Duty Ball Lock Pins. 14-15
Heavy-Duty Lifting Eyes (HDLE). 52
Heavy-Duty Rest Pads (HDRP) 161
Heavy-Duty Screw Jacks 164, 46MF
Heavy-Duty Swivel Hoist Rings 41-45
Heavy-Duty Toggle Clamps
(HDC, HDCSB, HVTC). 28-31TC, 38-40TC
Height Shims 38MF
Hex Nuts (HN). 215
Hex-Head Cap Screws 33MF
Hex-Head Spindles. 78TC
High-Pressure Inline Filters 119.1SW
High-Rise Clamps. 52-54MF
HILMA Precision Machine Vises 61.1-61.4SW
Hoist Ring Clips (HRC) 53
Hoist Rings, Pivoting (HR) 49-50
Hoist Rings, Safety 46
Hoist Rings, Shackle. 46
Hoist Rings, Side Pull 47-48
Hoist Rings, Swivel 36-46
Hollow Plunger Clamps (HC, HCA). 45SW
Hook Clamps 209-210, 57MF
Horizontal-Handle Toggle Clamps
(HTC, HTCS). 3-12TC, 63MF
Horizontal V Blocks 45MF
Hose, Hydraulic 64MF, 120SW
Hubs, Adjustable Locking 285-288
Hydraulic Clamps 1-128SW
Hydraulic Fittings & Accessories 100-128SW
Hydraulic Fluid. 120SW
Hydraulic Intensifiers. . . . . See Website
Hydraulic Machine Vises 61.1-61.4SW

I

Inline Filters, High-Pressure 119.1SW
Inserts, Cast 260
Inserts, Key 254-259
Inserts, Threaded 254-260

J

Jacks, Screw 163-164, 46-47MF
Jam Nuts (JN) 215
Jaw Nuts 1-35CJ

Jaws, Chuck 1-42CJ
Jaws, Vise 62-63SW
Jig Feet, Double-End 160
Jig Feet, Drill 160
Jig Feet, Leveling (JFL) 146
Jig Feet, Leveling Assembly (JF) 146
Jig Leg Plates (JLP) 161
Jig Pins (JP) 2
Jig Rest Buttons (JRB) 158
Jigs, Lift-N-C 282

K

Key Insert Assortments (KSC, KSF, KSMC) 259
Key Inserts (KS, KSK, KSM, KSS, KSST, KST) 254-259
Keys, Chuck Jaw 20CJ
Keys, Fixture 175-178
Keys, Locating 177
Keys, Mill Fixture 178
Keys, Reamed-Hole Fixture 176
Keys, Step Fixture 175
Keys, Subplate Locating 177
Keys, Sure-Lock Fixture 176
Kits, Clamping 233
Kits, Modular Fixturing 8-13MF
Kits, T Nut and Stud 224
Kits, T-Slot Bolt 227
Knob-Shoe Assemblies (KSA) 60
Knob Handles (KH) 111
Knobs, Adjustable Torque 78
Knobs, Ball 106-107
Knobs, Bar 55
Knobs, Hand 57, 64
Knobs, Fluted 56
Knobs, Four-Prong 59-65
Knobs, Knurled (KK) 72, 78-80
Knobs, Knurled Torque (KTK) 80
Knobs, Oval Ball 107
Knobs, Oval Tapered 109
Knobs, Palm-Grip Hand 55
Knobs, Plastic 56, 58, 62-66, 80, 101-103, 106-113
Knobs, Pull 113
Knobs, Quick-Acting 72
Knobs, Quick-Acting Knurled 72
Knobs, Star 58
Knobs, Tapered 110
Knobs, T-Handle 113
Knurled Check Nuts 214
Knurled-Face Washers (KFW) 218
Knurled Head Screws (KHS) 73
Knurled Knobs (KK) 72-73, 78-80
Knurled Nuts (KN) 214
Knurled Screw Jacks (KSJ) 163, 46MF
Knurled Torque Knobs (KTK) 80

L

L Pins (LP) 1
Latch-Action Toggle Clamps 56-63TC
Latch Bolts (see Swing Bolts) 229
Latch Plates 57-62TC
Leg Plates, Jig 161
Leveling Assemblies, Jig Feet 146
Leveling Feet (LF, LFN, LFS) 144-145
Leveling Feet, Jig 146
Leveling Feet, Stud 145
Leveling Lugs, Eccentric 165
Lever Bars 96
Lever Handles 97
Lever Handle Hubs (LHH) 97
Lift-N-C Jigs 282
Lifting Devices 34-54
Lifting Pins (LFP) 20
Liner Drill Bushings (L) 28-33BU
Liner Bushings, Ball Lock 23
Locating Bolts for Angle Brackets . . . . . See website
Locating Bushings 32MF
Locating Buttons, Adjustable (LB) 163
Locating Gages 33MF
Locating Jigs for Lockscrews (LSLJ) 34BU
Locating Keys 177
Locating Keys, Subplate 177
Locating-Pin Adaptors, Round and Diamond 42-43MF
Locating Pins, Diamond 167-169, 33MF, 42-43MF
Locating Pins, Floating 166
Locating Pins, Relieved 167-169, 33MF, 42-43MF
Locating Pins, Round 167-169, 33MF, 42-43MF
Locating Pins, Spring 140-141, 49MF
Locating Screws 32MF
Locating Tools for Slotted Locator Bushings (SLLT) 6
Locator Bushings, Slotted 6
Locator Buttons, Spherical Radius 157
Locator-Nose Clamp Straps 179, 193
Locator Template Bushings, Slotted (SLTB) 7
Lock Liners (LL) 68BU, 70-71BU
Lock Strips (LSM) 69BU
Locking Clamping Pins (LCP) 4
Locking Hubs, Adjustable 284-288
Locking L Pins (LLP) 3
Locking-Pin Bushings (LPB) 3
Locking T Pins (LTP) 3
Lockscrews (LS, LSM) 168, 34-35BU
Lok-A-Pin® (See Locking L Pins, T Pins,
and Clamping Pins) 3-4

M

Machine Vises 59.1-61.4SW
Manifolds, Hydraulic 118SW
Manual Work Supports 162, 47MF
Marine Ball Lock Pins (MBP) 12
Marine Detent Pins (MDP) 26
Metal Holder for Step Block and Clamp Sets 233
Mill Fixture Keys (MFK) . . . . . See website
Modular Fixturing (MF) 1-64MF
Mounting Blocks, Sideways 34MF
Mounting Screws 32-33MF
Multipurpose Extension Supports 37MF
Multipurpose Riser Blocks 35MF

N

Narrow Riser Blocks 54MF
No-Bounce Hammers (NBH) 247-249
No-Mar Hammers (NMH) 241
No-Rebound Hammers 247-249
Nuts, Acorn 214
Nuts, Coupling 216
Nuts, Flange 216
Nuts, Hex 215
Nuts, Jam 215
Nuts, Jaw 1-35CJ
Nuts, Knurled 214
Nuts, Knurled Check 214
Nuts, Spherical 217

Nuts, Swivel 148
Nuts, T. 223
Nylon Cable Assemblies 31
Nylon Cables. 31

O

Oil Groove Bushings. 40-42BU
Optical Cup Mounts (OB) . . . . . See website
Oval Ball Knobs (OBK) 107
Oval Tapered Knobs 109

P

Pad Covers, Rubber 144
Pads, Clamp Strap 186, 194
Pads, Construction Ball. 174
Pads, Heavy-Duty Rest. 161
Pads, Swivel 152, 156-157
Pallet Decouplers (PD, PDA) 106-108SW, 110SW
Pallet Fixture Keys 178
Pallet Tooling Plates 263-264, 17-18MF, 28-31MF
Palm-Grip Hand Knobs (PHK) 55
Palm-Grip Handles (PGH). 110
Pie-Shaped Chuck Jaws 1-39CJ
Pilot-Operated Check Valves 95-96SW
Pins, Adjustable Ball Lock 16
Pins, Ball Lock 8-16
Pins, Bullet-Nose. 171
Pins, Clamping 4
Pins, Clevis 230
Pins, Cone Locator 170
Pins, Detent 25
Pins, Diamond 167
Pins, Diamond Locating 177-178, 33MF, 42-43MF
Pins, Expanding 29
Pins, Finger 92
Pins, Floating Locating 166
Pins, Jig 2
Pins, L 1
Pins, Lifting 20
Pins, Quick Release. 6-25
Pins, Round 167
Pins, Round Locating 168-171, 236, 33MF, 42-43MF
Pins, Shoulder 2
Pins, Spring Locating 140-141, 49MF
Pins, T 1
Pivoting Edge Clamps 59MF
Pivoting Hoist Rings. 49-50
Pivoting Lift Plates. 49
Plain Clamps (PC) 198
Plastic Balls (PB) 106-107
Plastic C Clamps, Duraclamp 237
Plastic Handles (PH) . . . 56-58, 64-66, 80, 101-103, 106-113
Plastic Knobs 56-58, 64-66, 80, 101-103, 106-113
Plate Clamps. 28-31TC
Plates, Angle 262-280, 20MF, 27MF
Plates, Jig Leg 161
Plates, Riser. 26MF
Platform Tooling Plates 19MF
Pliers, Toggle (PL, PLS) 64-68TC
Plug Gage Assemblies. 250-251
Plug Gage Sets. 251
Plug Gages (PGD, PGN, PGS) 252-253
Plugs, Protection (PP) 33MF
Plunger Wrenches. 125
Plungers, Ball 121-124
Plungers, Hand-Retractable (PHRP) 126-131
Plungers, Spring 116-120
Pneumatic Toggle Clamps. 69-76TC
Power Toggle Clamps
(PPC, PPCH, PTC, PTCH) 69-76TC
Power Units 73-80SW
Power Workholding 64MF, 1-128SW
Press-Fit Ball Plungers
(PBP, PBPN, PBPS, PBPSN). 124
Press-Fit Drill Bushings (P, PC, PCM) 9-13BU
Press-Fit Ball Plungers
(PSP, PSPN, PSPS, PSPSN). 120
Pressure Gauges, Hydraulic 118SW
Pressure Monitoring (PM, PMA) 110-113SW
Pressure-Reducing Valves 94.2SW
Pressure-Relief Valves 94.2-94.3SW
Pressure Switches (PS) 117SW
Protection Plugs (PP) 33MF
Pull-Action Toggle Clamps (PA, PAS) 41-53TC
Pull Clamps 44-46SW
Pull Knobs (PK, PKO, PKR) 113
Pumps, Air 79-80SW
Pumps, Electric 74-77SW
Pumps, Hand 81-82SW
Pumps, Screw 83SW
Push Clamps, Hydraulic 32-37.1SW
Push/Pull Toggle Clamps (PC). 41-53TC, 63MF

Q

Quarter-Turn Screws (QTS) 67
Quick-Acting Knobs (QAK) 72
Quick-Acting Knurled Knobs (QKK) 72
Quick-Acting Screw Clamps 70-71
Quick-Change Tooling Plates. 23MF, 28-31MF
Quick Disconnects, Air 77TC
Quick Disconnects, Hydraulic 119SW
Quick-Release Pins 8-29

R

Reamed-Hole Fixture Keys (RFK) 176
Receiver Bushings, Ball Lock 24
Receiver Caps, Ball Lock 21
Rectangular Cast Sections 261
Rectangular Pallet Tooling Plates 264, 18MF
Rectangular Tooling Plates. 261, 14-15MF
Relieved Support Cylinders 41MF
Renewal Road Plates 54
Rest Buttons (RB). 158
Rest Buttons, Jig. 158
Rest Buttons, Screw 159
Rest Pads, Heavy-Duty. 161
Rests, Clamp 231
Reversible Hard Chuck Jaws. 1-35CJ
Revolving Ball Handles (RBH) 95
Revolving Handles (RH). 93-95
Revolving Trunnions 283
Rings, Cable 33
Rings, Hoist 34, 36-54
Riser Blocks 34-35MF, 54MF
Riser Cylinders. 38MF
Riser Plates 26MF
Rotary Air Valve Couplings 105SW
Rotary Couplings 101-102SW
Rotary T Nuts (RTN) 225

Rotary T Nuts & Stud Sets (RTNS) 225
Rotary Valve Couplings 103-104SW
Round Clamps (RC, RK, RCM) 34BU
Round Grippers
(RG, RGB, RGC, RGF, RGFT, RGFN, RGT) 151
Round Locating Pins (RLT, RPT) 168-169, 42-43MF
Round Pins (RP) 167, 33MF
Round Tooling Plates 16MF
Rubber Pad Covers (RPC) 144

S

Safety Hoist Rings (SHR) 46
Screw Clamp Adaptors 62MF
Screw Clamps 68, 70-71, 74, 180, 62MF
Screw Jacks 163-164, 46-47MF
Screw Pumps (SP) 83SW
Screw Rest Pads 159, 44MF
Screw Rest Buttons (SRB) 159
Screws, Adjustable Torque Thumb 79
Screws, Bodies for Swivel 76
Screws, Clamp Rest 231
Screws, Feet for Swivel 77
Screws, Half Turn 67
Screws, Knurled Head 73
Screws, Locating 32MF
Screws, Quarter Turn 67
Screws, Shoulder (SS) 220
Screws, Swivel Head (SHS) 75
Screws, Thumb, Adjustable Torque 79
Scissor-Lok Plate Lifting System (SLPS) 51
Sections, Cast 279-281
Self-Centering Vises 61.1-61.4SW
Sequence Valves 92-93SW
Serrata Groove Drill Bushings (SG) 45BU
Serrated Adjustable Edge Clamps (SAC) 204, 60MF
Serrated Chuck Jaws 3-13CJ
Serrated Double Edge Clamps (SDC) 206
Serrated Edge Clamps 204-206, 60MF
Serrated Face Washers 218
Serrated Fixed Edge (SFC) 205
Serrated Press Fit Drill Bushings (SP, SPM) 19-20BU
Sets, Modular Fixturing Starter 8-13MF
Shackle Hoist Rings (SHHR) 46, 50
Shackle Pins (see Lifting Pins) 20
Shackles 53
Shims, Height 38MF
Shoulder Construction Balls (SCB) 172
Shoulder Pins (SP) 2
Shoulder Screws (SS) 220
Shoulder Support Cylinders 41MF
Shutoff Valves 97SW
Side-Pull Hoist Rings (SPHR) 47-48
Side Stops 62SW
Sideways Mounting Blocks 34MF
Simplex Hammers 244-246
Single Cams 230
Slip/Fixed Renewable Bushings (S, SC, SF, SFM) . . 21-25BU
Slotted-Heel Clamp Straps (SHA) 181-186, 50MF
Slotted-Heel Padded Clamp Straps (SHPA) 186
Slotted Locator Bushings (SLLB) 6
Slotted Locator Template Bushings (SLTB) 7
Socket-Head Cap Screws (SHCS) 32MF
Soft Chuck Jaws 1-39CJ
Soft-Face Punches (SFP) 249
Solenoid Valves 88SW
Solid Handles (SH) 92
Spacer Blocks 54MF
Spacer Shims (see Height Shims) 38MF
Speed-Ball Handles (SBH) 98
Spherical Nuts and Washers (SNW) 217
Spherical-Radius Locator Buttons (SLB) 157
Spherical Trunnions 283
Spherical Washers (SW, SNW) 217
Spindles, Toggle Clamp 78-81TC
Spring-Loaded Spindles (SL) 81TC
Spring Locating Pins
(SLP, SLPE, SLPP, SLPR, SLPS, SLPT) 140-143, 49MF
Spring Plungers (SPS, SPN, SSPS, SSPN) 116-119
Spring-Plunger Wrenches (SPW) 125
Spring-Stop Buttons & Adaptors (SSB, SSBN)137-138, 49MF
Springs, Clamp (SPG) 232
Square Cast Sections 281
Square Grippers (SG, SGB, SGC, SGT) 151
Square-Serrated Keys (SQK) 25CJ
Square Pallet Tooling Plates 263, 17MF
Standard Adjustable Spindles 55MF
Star Knobs (SK) 58
Starter Sets, Modular Fixturing 8-13MF
Steel Handles 95
Step Blocks (SB) 199
Step Clamps (STC) 198
Step Fixture Keys (SFK) 175
Step Plug Gage Assemblies 250-251
Step Plug Gages (SPGD, SPGS) 250-251
Straddle Cam-Clamp Assemblies (SCA) 183
Straight Index Plungers (SIP, SIPB) 135
Strap Clamps 179-192, 195
Stud Leveling Feet (SLF, SLFN) 144-145
Studs 221
Subplate Locating Keys (SLKD, SLKR) 177
Support Cylinders 40-41MF
Support Riser Blocks 35MF
Supports, Edge 39MF
Supports, Extension 36-37MF
Supports, Work 47-55MF
Sure-Lock Fixture Keys (SLFK) 176
SWIFTSURE Power Workholding 1-128SW
Swing Bolts (SB) 229
Swing C Clamps (SCC) 238
Swing C Washers (SCW) 219
Swing-Clamp Assemblies (SWA) 212-213, 56MF
Swing Clamps, Air 26-27SW
Swing Clamps, Hydraulic
(SC, SCA, SCD, SCH, SCDH) 17-24SW
Swing Clamps, Manual 212-213, 56-57MF
Switches, Pressure 117SW
Swivel Contact Bolts 154, 157, 55MF, 128SW
Swivel-Foot Spindles (SF) 81TC
Swivel-Head Screws (SHS) 75
Swivel-Heel Clamp Straps (SWHA) 195
Swivel Hand-Knob Assemblies (SHKT) 60
Swivel Hoist Rings (SHR) 36-37
Swivel Nuts (SN) 148
Swivel Pads (SPA) 148
Swivel Pad Feet (SPF) 149
Swivel Pads, Gripper 156
Swivel Screw Bodies 76
Swivel Screw Clamps (SSC, SSCS) 74
Swivel Screw Feet 77
Swivel Screws, Gripper 153

T

T Bolts (TB) 226

T Cast Sections 279
T Handles (TH) 113
T Handle Knobs (TK) 66
T Nut and Stud Sets (TNS, TNH) 224
T Nuts (TN) 223
T Nuts, Rotary 225
T Pins (TP) 1
T-Slot Bolt Kits (TSBK) 227
T-Slot Bolts (TSB) 227
T-Slot Clamps 51-54MF
T-Slot Cleaners (TSCL) 224
Tapered Handles 112
Tapered Index Plungers (TIP, TIPB) 134
Tapered Knobs (TK) 109-110
Tapered-Nose Clamp Straps 190
Taper-Lok® Bushings (See Air Feed Bushings) 57-68BU
Taper-Lok® Air-Feed Lockscrews 71BU
Taper-Lok® Liners 70BU
Tapped-Heel Clamp Straps (THA) 187-189
Tapped-Heel Padded Clamp Straps (THPA) 194
Tapped-Nose Clamp Straps 52-53MF
Template Bushings (TB, TBT, TR, TTB,
TTBF, TTBT, TTR) 48-51BU
Tenons (See Fixture Keys) 175
Terminals (TERM) 32
Threaded-Body Push Clamps (TB, TBA, TBD) 32-33SW
Threaded-Body Work Supports 48-52SW
Threaded-Collar Push Clamps (TC, TCA) 41SW
Threaded Detent Pins 27
Threaded Inserts (TI) 254-260
Threaded Inserts, Weld In 54
Threaded Push Clamps (TPC) 52-53TC
Threaded Template Bushings (TTB, TTBF,
TTBT, TTR) 50-51BU
Threaded Tube Ends (TTE) 147
Three-Prong Knobs (TPK) 65
Thumb Screws 62, 75-76, 78-80
Thumb Screws, Adjustable Torque (TS) 79
TINY VISE™ Edge Clamps (TV) 200-202
Toe Clamps 216, 26-27SW
Toggle Clamp Accessories 78-82TC, 63MF
Toggle Clamps 1-82TC, 63MF
Toggle Clamps, Self-Adjusting 10TC, 27TC, 55TC
Toggle Clamps, with Safety Lock 57TC, 60-61TC
Toggle Edge Clamps 54-55TC
Toggle Pliers 64-68TC
Toggle Push Clamps 41-53TC, 63MF
Tooling-Ball Pads 174
Tooling Balls 172
Tooling-Block Pallet Decouplers 110SW
Tooling Blocks, Four-Sided 22MF
Tooling Blocks, Two-Sided 21MF
Tooling Blocks, Window 24MF
Tooling Plates, Angle 20MF
Tooling Plates, Platform 19MF
Tooling Plates, Quick-Change 23MF, 28-31MF
Tooling Plates, Rectangular 256, 14-15MF
Tooling Plates, Round 16MF
Tooling Plates, Square Pallet 263, 17MF
Tooling Plates, Vertical 262, 25MF
Toolroom Starter Sets, Modular Fixturing 8-13MF
Tools, Cable Crimping 33
Tools, Keensert 254-259
Tools, Spring Locating Pin 142
Tools, Tubing 123SW
Torque Screw Jacks (TSJ) 163, 47MF
Torque Thumb Screws, Adjustable
(TS, TSA, TSB, TSC, TSD, TSJN) 79
Trunnions (TL,TR) 283
Trunnions, Spherical (TL) 283
Tubing Clamps (TA) 124SW
Tubing, Hydraulic (T) 120SW, 123-124SW
Tubing Tools (TL) 123SW
Two-Sided Tooling Blocks 21MF

U

U Clamps, Forged 180
U Cast Sections 280
Unequal T Sections 279
Universal Lifting Rings 52
Un-A-Lok® Liner Bushings (UL, ULM, ULT) 33BU
Un-A-Lok® Liner Bushings, Diamond Knurl
(ULD, ULDM) 46BU
Up-Thrust Clamps 208, 56MF

V

V Blocks 280, 44-45MF
V Cast Sections 280
Valves, Air 77TC, 114SW
Valves, Clamping (V, VA) 87-89.1SW
Valves, Hydraulic (V, VA) 86-98SW
Var-A-Clamps (VAC) 180
Vertical-Handle Toggle Clamps
(VTC, VTCS) 13-40TC, 63MF
Vertical Tooling Plates 262, 25MF
Vertical V Blocks 44MF
Vise Jaws (VSA) 62-64SW, 68SW
Vises, Collet (VS, VSA) 71-72SW
Vises, Machine (VS, VSA) 60-65SW
Vises, Power (VS, VSA) 60-72SW
Vises, Self-Centering (VS, VSA) 68-72SW

W

Washers, C 219
Washers, Flanged 82TC
Washers, Flat 218
Washers, Knurled Face 218
Washers, Serrated Face 218
Washers, Spherical 217
Washers, Swing C 219
Weld-In Threaded Inserts 54
Wheels, Hand 82-83, 85
Wide-Nose Clamp Straps 191
Window Tooling Blocks 24MF
Work Supports, Hydraulic
(WS, WSA, WSD) 47-56SW, 67MF
Work Supports, Manual 162, 47MF
Wrenches, Spring-Plunger 125

PRODUCT FAMILY INDEX

A

A 26CJ, 31CJ
A.....57-68BU
AA 278
AB 276
AB.....15-17CJ
ABA 276
ABK 277
ABLB 277
ABP 16-17
ACV 77TC
AE .....See website
AED 118SW
AF 122SW
AFC 118SW
AFL.....66BU
AGNS 193
AH 103
AHL 104-105
AHP 101
AHTC.....10TC
ALCS 193
ALH 284-288
AK 22-23CJ
AL 36-37CJ
AN 214
AO.....See website
AP .....See website
AP 79-80SW
APH .....See website
AR.....See website
ASCA.....27SW
ASCS 193
AT 68BU
ATEC 55TC
ATC.....27TC
ATK.....78
AUTO.....13CJ, 15-17CJ

B

B.....170-171
BC 39SW, 46SW
BC .....See website
BCA 40SW
BCD.....39-40SW
BD 125
BDP 171
BF 261-264
BHS 68
BK 69
BLC 236
BLCR.....21
BLH 14-15
BLK 22, 70
BLL.....23
BLM.....71
BLP 10-11
BLRC.....24
BLRV 24
BLS 22
BLT 70
BND 170-171
BP 122
BPD 18
BR 82TC
BRP 171
BS 198
BSH 199
BSS 76
BULLARD .....See website

C

C.....32
CA 209
CAA.....280
CAC.....209
CAU.....280
CB 173
CB.....See website
CB 128SW
CBC.....241
CBC .....See website
CBP 174
CBU.....111-112SW
CC .....See website
CC 82TC
CC 116SW
CF 279
CH 230
CH 36BU
CHB.....99
CHM 37BU
CHP 100
CK 233
CKH.....233
CKMH.....233
CLB 170
CLP 170
CLVP 230
CN 216
COVER.....165, 174
CP 4, 186, 194
CPU.....110-112SW
CR 231
CRS.....231
CS 181-183, 194, 196
CS 50-51MF
CSA.....280
CSH.....281
CSR.....281
CSS.....281
CST 279
CSU.....280
CSV 280
CT 33
CUT 279
CW 219

D

D.....5CJ, 9CJ, 14CJ
30CJ, 33CJ
DBP.....122-123
DC 237
DC 38BU
DCHL 39BU
DCK.....235
DCKN 235
DCL 39BU
DCS.....237
DCT 237
DEA.....196
DEJF 160
DEP 25
DG 43BU
DGM 44BU
DJF.....160
DLT.....168-169
DLT.....43MF
DNC 22CJ
DPT.....168-169
DPX.....167
DPY 167
DPZ 167
DSH 9CJ, 14CJ
DT .....See website
DTN 18CJ

E

EB 228

EC 29-30SW
EC .....See website
EG 152
ELL.....165
EP 74-77SW, 110SW
EX .....See website
EXA 13.6SW
EXD 13.1-13.6SW
EXP 29
EXPH.....28
EZ.....47BU

F

F 32
F.....101-102SW, 106SW
118-122SW
F .....See website
FAC 179
FAC 58MF
FACA 179,242
FAS.....50, 53
FC.....79TC
FC.....24BU, 35BU
FCP 79TC
FCQA 243, 79TC
FD 42CJ
FEH .....See website
FFN 216
FGNS 192
FH.....120SW
FH .....See website
FHN.....215
FHSS 205-206
FHW 91
FJN.....215
FK.....175
FL 120SW
FLP.....166
FLPS 50
FM 26-27BU
FN 216
FP.....92
FR.....53, 118SW
FRH.....95
FRL.....118SW
FRCS 192
FSC 180
FSCS.....192
FSH.....10CJ
FSS 77
FUC.....180
FW.....218
FWB.....20CJ

G

G 251
GA 118SW
GAB.....276
GB 232
GBF.....155
GBFN 155
GBK .....See website
GCB 153
GCS 185, 197
GCSA 185, 197
GD.....54-56BU
GDD 56BU
GDE 56BU
GDH 56BU
GDI 55BU
GDL.....54BU
GHD 251
GHN 251
GHS 251
GL .....See website
GSB.....155
GSF.....155
GSP.....156
GSPF 156
GSPN 156
GSPS 156
GSS.....153

H

H.....98
H 14-16BU
H 120SW
HAR 6-7CJ
HC 17BU
HC 45SW
HCA.....45SW
HD.....33CJ
HDA 31CJ
HDC 38-40TC
HDCSB.....38-40TC
HDLE.....52
HDP 32-33CJ
HDRP 161
HDS 31CJ
HEH 31CJ
HI .....See website
HK 59, 64
HKT 60
HL.....31BU
HLD 70BU
HLL.....70BU
HM 18BU, 32BU
HN 215
HO 14CJ
HOB 5CJ
HOW .....See website
HP 81-82SW
HPA 81SW
HR 49
HRC 53
HRP.....126
HRPK 132
HRPM.....133
HRPT 127
HSC.....240
HSH 31CJ
HTC.....3-12TC
HTC.....63MF
HTCA 243

HTS 63
HVTC 28-31TC
HWAF 82
HWAR 83
HWAS.....86
HWSD 89
HWSF.....82
HWSS 84-85, 87, 90
HWTR 87
HWTS.....84

J

JEH.....12-14CJ
JF 146
JFL 146
JLP 161
JN.....215
JN 14CJ
JNS 14CJ
JP 2
JRB 158
JSH.....12-14CJ

K

KA 31
KFW 218
KH 111
KHS.....73
KI.....260
KK 78
KN 214
KNCS.....See website
KR 33
KS 255
KSA 60
KSA 62MF
KSC 259
KSF 259
KSJ.....163
KSJ 46MF
KSK 255
KSM 255
KSMC.....259
KSMT 255-256
KSS.....258-259
KSSS.....259
KSST.....258
KST 255-256
KT 2-5CJ
KTK 80
KTT 2-5CJ, 12-14CJ
KW 3CJ

L

L 32-34BU
LAK.....See website
LB.....163
LCP 4
LEH.....21CJ
LF 144
LFN 144
LFP.....20
LFS.....144
LHH 97
LHRP 130-131
LL 68BU
LLP 3
LP 1
LPA .....See website
LPA.....60-61TC
LPB 3
LPP.....See website
LPS.....See website
LS.....168
LS.....34BU
LSH.....21CJ
LSLJ 34BU
LSM 34BU, 71BU
LSPC 46TC
LT .....See website
LTP 3
LVB.....96
LVTC.....33TC

M

MBP 13
MC 36-37CJ
MD 30CJ
MDA 28CJ
MDP 26
MDP.....29-30CJ
MDS.....28CJ
MEH.....28-29CJ
MFB .....See website
MFK.....178
MF.....1-64MF
MF 157, 159, 162, 164
207, 210
MP 38CJ
MSH.....28-29CJ
MTT 12-14CJ

N

NB.....See website
NCJ 282
NE 14CJ
NF 14CJ
NMH 179
NRH 247-249

O

OBK.....107

P

P.....9-11BU
PA 56-60TC
PB 104-107
PBA .....See website
PBP 124
PBPN 124
PBPS.....124
PBPSN 124
PC 198
PC 63MF
PC 50TC
PC 12BU
PCA 77TC
PCAV 77TC
PCBE.....77TC
PCBR 81TC
PCBT.....77TC
PCCP 77TC
PCCR 77TC
PCEM 77TC
PCH.....36BU
PCHN 77TC
PCQD 77TC
PCQDP.....77TC
PCQDS.....77TC
PCSE.....77TC
PCTC.....77TC
PCTE.....77TC
PD 104-110SW
PD .....See website
PDA 104-109SW
PFK 56-57
PFKC.....178
PFKR.....178
PGH 110
PH 112
PH.....15-18CJ
PHK.....55
PHR.....115
PHRP 128
PHS.....114
PK 113
PKO.....113
PKR.....113
PL.....64-68TC
PLP 49
PLS.....68TC
PM 13BU, 30BU
PPC 75-76TC
PPC 63MF
PPCH 77-78TC
PPK.....62-63
PS 89SW, 117SW
PSA 117SW
PSH 17CJ
PSP 120
PSPN 124
PSPS.....124
PSPSN 124
PTC 72-76TC
PTC 63MF
PTK 109

Q

QAK.....72
QKK.....72
QTS.....67

R

RAK .....See website
RB 158
RBH.....95
RC 34BU
RCM 34BU
RFK 176
RG.....150-151
RGB 150-151
RGC 150-151
RGF 150-151
RGFN.....150-151
RGFT 150-151
RGT 150-151
RH 93
RHRP 129
RK 35BU
RLT.....168-169
RLT.....43MF
RP 167
RPC.....144
RPT.....168-169
RRP.....54
RTN 225
RTNS.....225

S

S .....See website
S 82TC
SA.....78TC
SA 55MF
SAC 204
SAC 60MF
SB 229
SB 2CJ
SBB 199
SBC 199
SBH 98
SBK 108
SBP 122
SBPN 123
SBS 199
SC.....17-24SW, 50SW
SC .....See website
SC 24BU
SCA.....183
SCA .18SW, 21SW, 23SW
SCB.....172
SCC.....238
SCD.....18-21SW
SCDH 19-20SW
SCH 20SW, 23SW
SCH .....See website
SCP 37CJ
SCW.....219
SDC.....206
SDC 60MF
SEIKI 12-14CJ
SF 80TC
SF 21-23BU
SFC 205
SFC 60MF
SFC 24BU
SFK 175
SFM.....25BU
SFP 249
SG 151
SG 45BU
SGB.....151
SGC 151
SGT 151
SH 92
SHA.....182
SHCS 32MF
FAC 179
SHKT.....60
SHR 36-38, 40-46
SHHR 46
SHRB 46
SHRK 239
SHS.....75
SHS.....62MF
SIP 136
SIPB 136
SK 58
SKA 31
SKR.....33
SKS 256
SKSC 259
SKSL 256
SL 81TC
SLB 157
SLF.....145
SLFK 176
SLFN 145
SLKD 177

SLKR.....177
SLLB 6
SLLT 6
SLP 140
SLPE 143
SLPP 142
SLPR.....143
SLPS 51, 141
SLPT 142
SLTB.....7
SMW .....See website
SN 148
SNW.....217
SP 2
SP 19BU
SP 39CJ
SP.....83SW
SPA 148
SPC.....41-49TC
SPC.....63MF
SPF 149
SPFN.....149
SPG.....232
SPH.....244-246
SPHR 47-48
SPM 20BU
SPN.....117-119
SPS.....117-119
SPW 125
SQK .....See website
SRB.....159
SS 220
SS 8-13MF
SSB.....137-138
SSC.....74
SSC.....62MF
SSC 80TC
SSPN 117, 119
SSPS.....117, 119
ST 36-37CJ
STC 198
STUD 221
SUG.....12-14CJ
SW 217
SW 33-34SW
SWA 212-213
SWHA 195

T

T .....See website
T 120SW
TA 124SW
TAPK 110
TB.....226
TB .....See website
TB.....33SW
TBA 33SW, 49SW
TBC 114SW
TBCH.....115SW
TBD 37.1SW
TBT .....See website
TC ...5TC, 11TC, 34-37TC
TC .....See website
TCA .....See website
TDP 27
TERM 32
TH 113
THA 188
THPA 194
TI 260
TIP.....136
TIPB 136
TK.....66
TL 283
TL 123SW
TLD 69-70BU
TLL.....69-70BU
TN .....See website
TN 223
TNH.....210
TNS 224
TNS .....See website
TP.....1
TPC 52-53TC
TPK 65
TR 283
TR .....See website
TS.....79
TSA 79
TSB 227
TSB 79
TSBK.....227
TSC 79
TSCL 224
TSD 79
TSJ 163
TSJ.....47MF
TSJN 163, 214
TSJN 46MF
TSKS.....257
TSKSL.....257
TTB 50BU
TTBF 51BU
TTBT 51BU
TTE 147
TTR 50-51BU
TV.....200, 202
TW.....82TC
TW.....34BU

U

U .....See website
UL.....33BU
ULD 46BU
ULDM 46BU
ULM.....33BU
ULR 52
ULT.....33BU
UVB 30CJ

V

V 87-98SW
103-105SW, 119.1SW
VA.....87-89SW
VAC 179
VCC 26TC
VS 61.2-72SW
VSA 61.2-72SW
VTC 12-38TC
VTC 63MF

W

W.....251-253
WC.....See website
WS 48-56SW
WS .....See website
WSA 48-55SW
WSD 56SW
WTI.....54

0

0001 .....33MF
01XX 261
01XX 14-15MF
020X.....262
02XX 25MF
03XX 16MF
04XX.....20MF, 27MF
05XX 27MF
06XX.....21MF, 24MF
07XX 22MF
08XX 263-264
08XX 17-19MF
09XX 26MF

1

1XX 216-217, 219
100X.....59MF
1000X.....171
110X.....59MF
1100X.....171
11XXX.....222
11XXX.....59BU
12XX 62MF
12XXX.....60-61BU
13XXX.....62-63BU
13XXX.....231
14XX 35MF
1444X.....70-71BU
14XXX.....64-72BU
14X.....217
15X.....217, 219
15XX 56MF
15XXX.....66-67BU
16XX 34MF
165XX 69-71BU
16XXX.....78
17XXX.....181
180X.....48MF
18XXX.....187, 189
190X.....52MF
199XX 69BU

2

2XX 218
20XX 52MF
20XXX.....190
21XXX.....59BU
210X.....47MF
22XXX.....191
22XXX.....60-61BU
220X.....53MF
23XX 54MF
23XXX.....73
23XXX.....62-63BU
24XXX.....232
24XXX.....64-65BU
240X.....54MF
25X.....218
25XXX.....66-67BU
250X.....157
250X.....55MF
26X.....218
260X.....55MF
26XXX.....158
27XX 184
28XX 184
29XX 184
290X.....48MF

3

30XX 184
31XX 189
31XX 40-41MF
32XX 189
320X.....41MF
33XX 189
330X.....36MF
34XX 189
340X.....164
340X.....46MF
350X.....164
350X.....46MF
360X.....37MF
370X.....39MF
380X.....39MF
390X.....49MF

4

4XXX 190
40XX 190
400X.....33MF
41XX 190
41XX 42MF
42XX 190
420X.....42MF
43XX 32-33MF
44XX 177
44XXX 191
450X.....33MF
460X.....33MF
47XX 37MF
480X.....159
480X.....44MF
49XX 23MF

5

50XX 210
50XX 57MF
510X.....211
510X.....57MF
520X.....38MF
530X.....208
530X.....56MF
540X.....63MF
56XX 207
56XX 58MF
570X.....162
570X.....47MF
58XX 211

6

600X.....45MF
610X.....44MF

7

7XXX.....38MF

8

800X.....171

9

900X.....171

GENERAL INFORMATION

ORDERING INFORMATION:

Carr Lane products are sold by authorized distributors located throughout North America and the rest of the world. Please see our website or contact us for the name of our qualified stocking distributor nearest you. For technical information, contact our factory engineering staff at 314-647-6200 (1-800-827-2526 for power workholding technical information).

SPECIALS:

Carr Lane will gladly make any special tooling components or company tooling standards to your specifications. Please send a print or sketch with your request. Our wide range of manufacturing capabilities allows us to quickly produce special items for you at economical prices.

DIMENSIONS AND TOLERANCES:

All drawings in this catalogue are shown in Third-Angle Projection:

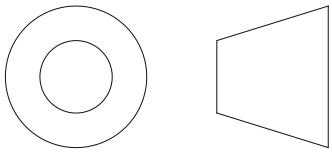

In general, the following maximum tolerances apply to dimensions in this catalogue, unless otherwise specified:

X.XXmm	±15mm
X.Xmm	±1mm
Xmm	±1mm on finished surfaces
	±3mm on castings, forgings, and assemblies

FINISH SPECIFICATIONS:

The finishes shown in catalogue are applied according to the following specifications:

- Black Oxide—MIL-C-13924C
- Zinc Plate Yellow Chromate
- Zinc Plate Clear Chromate
- Cadmium Plate—QQ-P-416, Class 3, Type 1
- Black Anodize—MIL-A-8625, Type II, Class 2

Other finishes are available as specials.

ANSI & TCMAI STANDARDS:

Whenever appropriate, our tooling components meet the standards of the American National Standards Institute (ANSI) and the Tooling Component Manufacturers Association International (TCMAI).

TRADEMARKS:

Numerous trademarks appear throughout this catalogue. Delrin is a registered trademark of E.I. du Pont de Nemours & Co. Ball Lock Mounting System together with ball logo is a trademark of Kennametal Inc. All other trademarks contained herein are those of Carr Lane Mfg. Co. and its affiliates.

ENGINEERING CHANGES:

All Carr Lane products are continually subject to possible design improvements. We include any engineering changes as soon as possible in our catalogs, tracing templates, CAD tooling libraries, and other literature. However, due to inevitable time lags, dimensions and specifications are subject to change without notice.

OTHER LITERATURE:

In addition to this catalogue, the following literature is also available:

- Trigonometry Tables and Handy References for Engineers
- Jig and Fixture Handbook
- Modular Fixturing Handbook
- Separate Drill Bushing Catalogue
- Separate Toggle Clamp Catalogue
- Separate Modular Fixturing Catalogue
- Separate Power Workholding Catalogue
- International Catalogue (SI–Metric Units)
- Spanish Catalogue
- Price List

Please contact factory or your Carr Lane distributor.

GUARANTEE OF QUALITY:

Carr Lane warrants that the products described herein will be free from defects in material and workmanship. If you find any failure to conform to this warranty within 90 days from date of receipt of the product, and give us immediate notification thereof, we will replace the defective product or make suitable repairs. If we are unable to correct such nonconformity by replacing the product or making suitable repairs, whether due to the nature of such nonconformity, your use of the product, or for any other reason, we will refund the purchase price upon receipt of the nonconforming product f.o.b. our plant. No product should be returned to us without a return-authorization number. In no event shall we be liable either directly or by way of contribution or indemnity, for direct, special, incidental or consequential damages such as, but not limited to, property damage, loss of profit, or damages based on loss of use of the product, whether the claim for any such damages be based on warranty, express or implied, contract, tort, or otherwise. This warranty does not apply to products that are misapplied, altered, or abused. The foregoing is our sole warranty with respect to the product. We make no other warranties, express or implied, including implied warranties of merchantability and fitness for a particular purpose.

SAFETY PRECAUTIONS:

Machine tools pose many potential hazards. Observe all appropriate safety precautions, including those specifically listed in this catalogue.

Carr Lane MANUFACTURING CO.
4200 Carr Lane Ct., P.O. Box 191970
St. Louis, Missouri 63119-7970 USA
Phone: 314-647-6200, FAX: 314-647-5736
Web Site: www.carrlane.com

(Rev. 7-10)

L & T PINS

PIN: 12L14 STEEL, CARBURIZED-HARDENED, BLACK OXIDE FINISH
HANDLE: 12L14 STEEL, BLACK OXIDE FINISH

ADDITIONAL DIAMETERS NOW AVAILABLE!

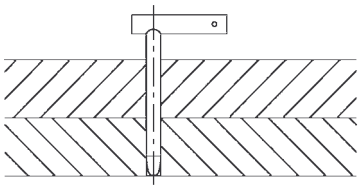

L and T Pins are removable locating pins, precision ground for accurately aligning holes. The pin is inset in the handle and silver soldered to create a sturdy assembly. The handle is drilled for attaching a cable.

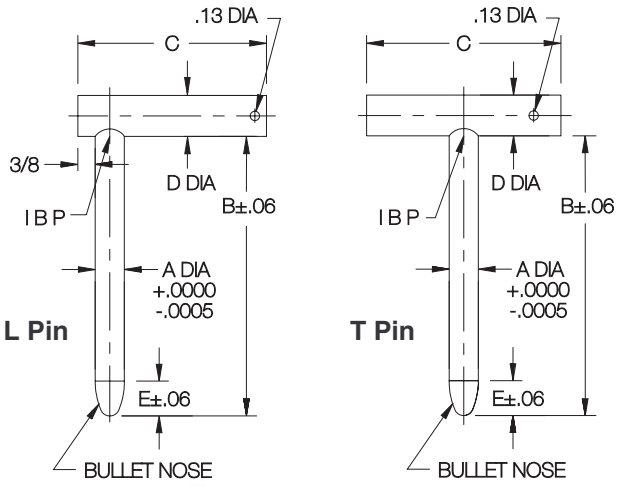

To order L or T Pins with a standard 10-12" cable assembly attached, add "-C" to the part number. (CL-2-C cable with a terminal for #10-32 or M5 attachment screw).
Example: CL-7-LP-C

USA

L PIN PART NO.	T PIN PART NO.	A DIA NOMINAL	A DIA ACTUAL	B	C	D DIA	E
CL-0-LP	CL-0-TP	1/8	.1250	2-1/2	1-1/2	1/4	1/4
CL-41-LP	CL-41-TP	#30	.1285	3	2-1/2	5/16	1/4
CL-00-LP	CL-00-TP	5/32	.1562	3-1/2			
CL-1-LP	CL-1-TP	3/16	.1875	3			
CL-21-LP	CL-21-TP			4			
CL-2-LP	CL-2-TP			6			
CL-3-LP	CL-3-TP	#11	.1910	3			
CL-23-LP	CL-23-TP			4			
CL-4-LP	CL-4-TP			6			
CL-43-LP	CL-43-TP	#10	.1935	3			
CL-20-LP	CL-20-TP	#9	.1960	3			
CL-44-LP	CL-44-TP	7/32	.2188	3	2-1/2	3/8	3/8
CL-38-LP	CL-38-TP	1/4	.2500	2			
CL-5-LP	CL-5-TP			3			
CL-25-LP	CL-25-TP			4			
CL-6-LP	CL-6-TP			6			
CL-17-LP	CL-17-TP	F	.2570	3			
CL-37-LP	CL-37-TP			4			
CL-45-LP	CL-45-TP	9/32	.2812	4	3	7/16	1/2
CL-39-LP	CL-39-TP	5/16	.3125	2	2-1/2		
CL-7-LP	CL-7-TP			3-1/2	3		
CL-27-LP	CL-27-TP			4			
CL-8-LP	CL-8-TP			6			
CL-40-LP	CL-40-TP	3/8	.3750	3	2-1/2	1/2	1/2
CL-9-LP	CL-9-TP			4	3-1/2		
CL-29-LP	CL-29-TP			5			
CL-10-LP	CL-10-TP			6			
CL-30-LP	CL-30-TP			7			
CL-11-LP	CL-11-TP	7/16	.4375	4	3-1/2	9/16	5/8
CL-31-LP	CL-31-TP			5			
CL-12-LP	CL-12-TP			6			
CL-32-LP	CL-32-TP			7			
CL-13-LP	CL-13-TP	1/2	.5000	4	3-1/2	5/8	5/8
CL-14-LP	CL-14-TP			6			
CL-33-LP	CL-33-TP			7			
CL-34-LP	CL-34-TP			9			
CL-18-LP	CL-18-TP	9/16	.5625	4			
CL-19-LP	CL-19-TP			6			
CL-15-LP	CL-15-TP	5/8	.6250	6	3-1/2	7/8	3/4
CL-35-LP	CL-35-TP			8			
CL-16-LP	CL-16-TP	3/4	.7500	6			
CL-36-LP	CL-36-TP			8			

METRIC

CLM-4-LP	CLM-4-TP	4mm	.1575	3-1/2	2-1/2	5/16	3/16
CLM-5-LP	CLM-5-TP	5mm	.1969	3			
CLM-50-LP	CLM-50-TP			6			
CLM-6-LP	CLM-6-TP	6mm	.2362	3	2-1/2	3/8	1/4
CLM-60-LP	CLM-60-TP			6			
CLM-8-LP	CLM-8-TP	8mm	.3150	3-1/2	3	7/16	7/16
CLM-80-LP	CLM-80-TP			6			
CLM-10-LP	CLM-10-TP	10mm	.3937	3	2-1/2	1/2	7/16
CLM-100-LP	CLM-100-TP			6	3-1/2		
CLM-12-LP	CLM-12-TP	12mm	.4724	4	3-1/2	5/8	7/16
CLM-120-LP	CLM-120-TP			6			
CLM-16-LP	CLM-16-TP	16mm	.6299	6	3-1/2	7/8	11/16
CLM-160-LP	CLM-160-TP			8			
CLM-20-LP	CLM-20-TP	20mm	.7874	6			
CLM-200-LP	CLM-200-TP			8			

Carr Lane MANUFACTURING CO.
4200 Carr Lane Ct., P.O. Box 191970
St. Louis, Missouri 63119-7970 USA
Phone: 314-647-6200, FAX: 314-647-5736
Web Site: www.carrlane.com

(Rev. 10-07)

SHOULDER PINS

PIN: 12L14 STEEL, CARBURIZED-HARDENED, BLACK OXIDE FINISH
HANDLE: 12L14 STEEL, BLACK OXIDE FINISH

To order Shoulder Pins with a standard 10-12" cable assembly attached, add "-C" to the part number. (CL-2-C cable with a terminal for #10-32 or M5 attachment screw). Example: CL-7-SP-C

Removable locating pin with a straight handle, precision ground for accurately aligning holes. The handle is drilled for attaching a cable.

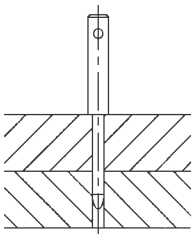

USA

PART NO.	A DIA NOMINAL	A DIA ACTUAL	B	C	D DIA	E DIA
CL-7-SP	1/4	.2500	2-1/2	2-5/8	1/2	1/4
CL-10-SP	5/16	.3125			9/16	
CL-14-SP	3/8	.3750	4		5/8	1/4
CL-19-SP	1/2	.5000	3		3/4	5/16

METRIC

CLM-6-SP	6mm	.2362	2.56	2.6	1/2	1/4
CLM-8-SP	8mm	.3150			9/16	
CLM-10-SP	10mm	.3937	3.94		5/8	1/4
CLM-12-SP	12mm	.4724	2.95		3/4	5/16

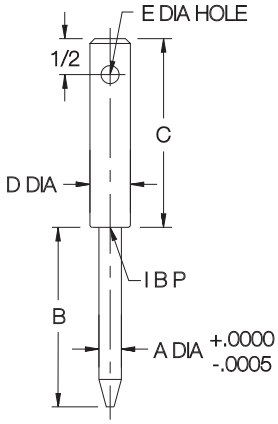

JIG PINS

PIN: 1144 STEEL, HEAT TREATED, BLACK OXIDE FINISH
HANDLE: SPRING STEEL, BLACK OXIDE FINISH

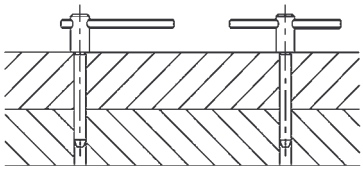

USA

PART NO.	A DIA NOMINAL	A DIA ACTUAL	B	C	D DIA	E	F
CL-10-JP	3/16	.1872	1-7/8	1/8	3/8	2	3/16
CL-20-JP	1/4	.2497	2	5/32			
CL-30-JP	5/16	.3120	2-1/2	3/16	1/2	3	1/4
CL-40-JP	3/8	.3745	3-1/4	1/4			
CL-50-JP	1/2	.4995	4	9/32	9/16	3	1/4

METRIC

CLM-5-JP	5mm	.1966	1-7/8	1/8	3/8	2	3/16
CLM-6-JP	6mm	.2359	2	5/32			
CLM-8-JP	8mm	.3145	2-1/2	3/16	1/2	3	1/4
CLM-10-JP	10mm	.3932	3-1/4	1/4			
CLM-12-JP	12mm	.4719	4	9/32	9/16	3	1/4

Similar to L and T Pins, but with a shoulder to keep the handle raised. Pins are ground slightly undersize. To convert from an L handle to a T handle, slide the roll-pin handle by tapping it with a hammer.

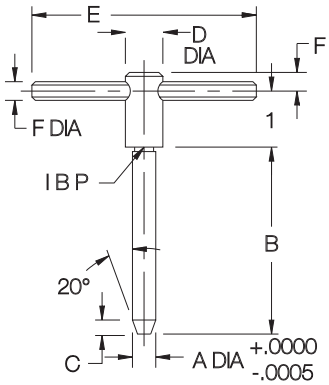

MANUFACTURING CO.
4200 Carr Lane Ct., P.O. Box 191970
St. Louis, Missouri 63119-7970 USA
Phone: 314-647-6200, FAX: 314-647-5736
Web Site: www.carrlane.com

(Rev. 9/09)

NOW ALSO AVAILABLE IN METRIC!

LOCKING L & T PINS

PIN: 12L14 STEEL, CARBURIZED-HARDENED, BLACK OXIDE FINISH
HANDLE: 12L14 STEEL, BLACK OXIDE FINISH
BUSHING: 8620 STEEL, CASE HARDENED, BLACK OXIDE FINISH

Locating pin is positively retained in the bushing. The bushing's spring clip ring locks the pin fully retracted by snapping into the pin's groove. Spring pressure also holds the pin in intermediate positions, an advantage especially if the fixture is turned upside down. Patent No. 3,471,186.

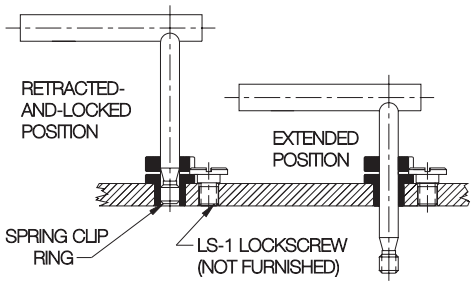

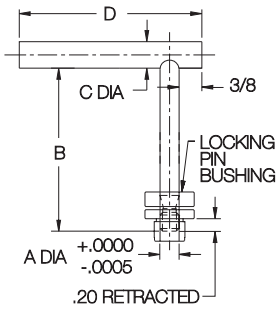

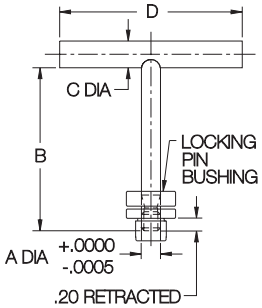

USA

L PIN COMPLETE ASSY PART NO.	L PIN ONLY PART NO.	T PIN COMPLETE ASSY PART NO.	T PIN ONLY PART NO.	BUSHING ONLY PART NO.	A DIA NOMINAL	A DIA ACTUAL	B	C DIA	D
CL-1A-LLP-B	CL-1A-LLP	CL-1A-LTP-B	CL-1A-LTP	CL-3-LPB	3/16	.1865	1-1/2	5/16	2-1/2
CL-1-LLP-B	CL-1-LLP	CL-1-LTP-B	CL-1-LTP				3		
CL-38-LLP-B	CL-38-LLP	CL-38-LTP-B	CL-38-LTP	CL-4-LPB	1/4	.2490	2	3/8	2-1/2
CL-5-LLP-B	CL-5-LLP	CL-5-LTP-B	CL-5-LTP				3		
CL-25-LLP-B	CL-25-LLP	CL-25-LTP-B	CL-25-LTP				4		
CL-39-LLP-B	CL-39-LLP	CL-39-LTP-B	CL-39-LTP	CL-5A-LPB	5/16	.3115	2	5/8	3
CL-7-LLP-B	CL-7-LLP	CL-7-LTP-B	CL-7-LTP				3-1/2		
CL-8-LLP-B	CL-8-LLP	CL-8-LTP-B	CL-8-LTP				6		
CL-40A-LLP-B	CL-40A-LLP	CL-40A-LTP-B	CL-40A-LTP	CL-6A-LPB	3/8	.3740	2	5/8	3-1/2
CL-9-LLP-B	CL-9-LLP	CL-9-LTP-B	CL-9-LTP				4		
CL-10-LLP-B	CL-10-LLP	CL-10-LTP-B	CL-10-LTP				6		
CL-13A-LLP-B	CL-13A-LLP	CL-13A-LTP-B	CL-13A-LTP	CL-8A-LPB	1/2	.4990	2	5/8	3-1/2
CL-13-LLP-B	CL-13-LLP	CL-13-LTP-B	CL-13-LTP				4		
CL-14-LLP-B	CL-14-LLP	CL-14-LTP-B	CL-14-LTP				6		

METRIC

CLM-6-LLP-B	CLM-6-LLP	CLM-6-LTP-B	CLM-6-LTP	CLM-6-LPB	6mm	.2352	3	3/8	2-1/2
CLM-8-LLP-B	CLM-8-LLP	CLM-8-LTP-B	CLM-8-LTP	CLM-8-LPB	8mm	.3140	3	7/16	3
CLM-10-LLP-B	CLM-10-LLP	CLM-10-LTP-B	CLM-10-LTP	CLM-10-LPB	10mm	.3927	3	1/2	2-1/2
CLM-12-LLP-B	CLM-12-LLP	CLM-12-LTP-B	CLM-12-LTP	CLM-12-LPB	12mm	.4715	4	5/8	2-1/2

*See below for additional bushings or more-detailed bushing dimensions.

LOCKING-PIN BUSHINGS

8620 STEEL, CASE HARDENED, BLACK OXIDE FINISH

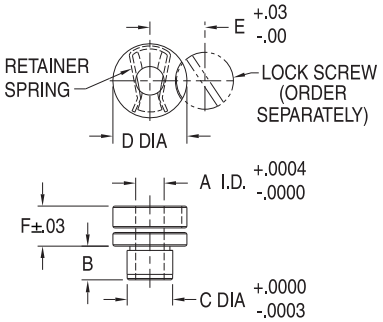

Bushing equipped with a retainer spring on the I.D. Used with Locking L Pins, Locking T Pins, and Locking Clamping Pins. Patent No. 3,471,186.

USA

PART NO.	A DIA NOMINAL	A DIA ACTUAL	B	C DIA NOMINAL	C DIA ACTUAL	D DIA	E	F	LOCKSCREW (ORDER SEPARATELY)
CL-3-LPB	3/16	.1868	.31	13/32	.4078	13/16	.62	.44	LS-1
CL-4-LPB	1/4	.2493	.31						
CL-4A-LPB			.50						
CL-5-LPB	5/16	.3118	.31	1/2	.5017				
CL-5A-LPB			.37						
CL-5B-LPB			.50						
CL-6-LPB	3/8	.3743	.31	5/8	.6267				
CL-6A-LPB			.50						
CL-8-LPB	1/2	.4993	.50	3/4	.7518	1-1/16	.75		
CL-8A-LPB			.75						

METRIC

CLM-6-LPB	6mm	.2355	.31	10mm	.3952	.87	.630	.47	LSM-3
CLM-8-LPB	8mm	.3143	.39	13mm	.5135				
CLM-10-LPB	10mm	.3930	.47	16mm	.6316				
CLM-12-LPB	12mm	.4717	.71	20mm	.7892	1.02	.709		

Carr Lane MANUFACTURING CO.
4200 Carr Lane Ct., P.O. Box 191970
St. Louis, Missouri 63119-7970 USA
Phone: 314-647-6200, FAX: 314-647-5736
Web Site: www.carrlane.com

(Rev. 7-08)

CLAMPING PINS

PIN: 12L14 STEEL, CARBURIZED-HARDENED, BLACK OXIDE FINISH
BUSHING: 12L14 STEEL, BLACK OXIDE FINISH

Threaded alignment pin that is usually used to clamp two parts together. Weld bushing in place at the proper length to suit the application.

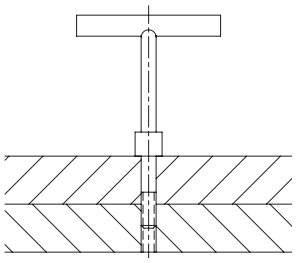

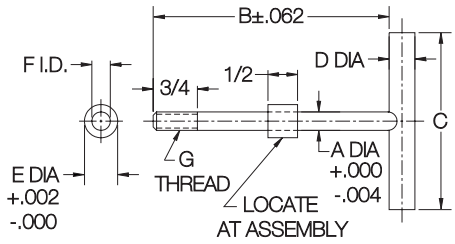

USA

PART NO.	A DIA NOMINAL	A DIA ACTUAL	B	C	D DIA	E DIA	F DIA	G
CL-0-CP	#10	.193	3	1-1/2	1/4	3/8	.203	#10-24
CL-0A-CP								#10-24
CL-1-CP	1/4	.250	4	2-1/2	3/8	1/2	.252	1/4-20
CL-2-CP	5/16	.312		3	7/16	9/16	.315	5/16-18
CL-3-CP	3/8	.375	4-1/2	3-1/2	1/2	5/8	.378	3/8-16
CL-4-CP	1/2	.500	5		5/8	3/4	.503	1/2-13

METRIC

CLM-6-CP	6mm	.236	4	2-1/2	3/8	1/2	.252	M6
CLM-8-CP	8mm	.315		3	7/16	9/16	.315	M8
CLM-10-CP	10mm	.394	4-1/2	3-1/2	1/2	5/8	.378	M10
CLM-12-CP	12mm	.472	5		5/8	3/4	.503	M12

LOCKING CLAMPING PINS

PIN: 12L14 STEEL, CARBURIZED-HARDENED, BLACK OXIDE FINISH
BUSHING: 8620 STEEL, CASE HARDENED, BLACK OXIDE FINISH

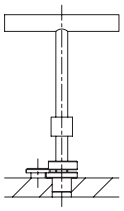

Retracted-and-locked position

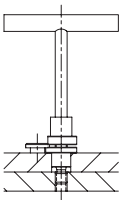

Clamped position

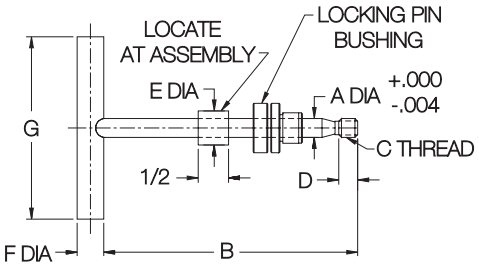

Similar to the Clamping Pins shown above, except that the pin is positively retained in the bushing. The bushing's spring clip ring locks the pin in fully retracted position by snapping into the pin's groove. Patent No. 3,471,186.

USA

COMPLETE ASSY PART NO.	PIN ONLY PART NO.	BUSHING ONLY PART NO.*	A DIA NOMINAL	A DIA ACTUAL	B	C	D	E DIA	F DIA	G
CL-1-LCP-B	CL-1-LCP	CL-4-LPB	1/4	.2490	4	1/4-20	1/4	1/2	3/8	2-1/2
CL-2-LCP-B	CL-2-LCP	CL-5A-LPB	5/16	.3115	4	5/16-18	5/16	9/16	7/16	3
CL-3-LCP-B	CL-3-LCP	CL-6A-LPB	3/8	.3740	4-1/2	3/8-16	3/8	5/8	1/2	3-1/2
CL-4-LCP-B	CL-4-LCP	CL-8A-LPB	1/2	.4990	5	1/2-13	1/2	3/4	5/8	3-1/2

METRIC

CLM-6-LCP-B	CLM-6-LCP	CLM-6-LPB	6mm	.2352	4	M6	.24	1/2	3/8	2-1/2
CLM-8-LCP-B	CLM-8-LCP	CLM-8-LPB	8mm	.3140	4	M8	.31	9/16	7/16	3
CLM-10-LCP-B	CLM-10-LCP	CLM-10-LPB	10mm	.3927	4-1/2	M10	.39	5/8	1/2	3-1/2
CLM-12-LCP-B	CLM-12-LCP	CLM-12-LPB	12mm	.4715	5	M12	.47	3/4	5/8	3-1/2

*See page 3 for additional bushings or more-detailed bushing dimensions.

NOW ALSO AVAILABLE IN METRIC!

Carr Lane®
MANUFACTURING CO.
4200 Carr Lane Ct., P.O. Box 191970
St. Louis, Missouri 63119-7970 USA
Phone: 314-647-6200, FAX: 314-647-5736
Web Site: www.carrlane.com

(Rev. 7-10)

SLOTTED LOCATOR BUSHINGS

STEEL: TOOL STEEL, HEAT TREATED RC 58-62, BLACK OXIDE FINISH
STAINLESS: 440C STAINLESS STEEL, HEAT TREATED

Press Fit

ADDITIONAL SIZES, AND NOW ALSO AVAILABLE IN STAINLESS STEEL!

Use with L Pins, T Pins, Shoulder Pins, or Ball Lock Clamps to align two holes without binding. Precision bushing with a tight tolerance in one direction and full relief in the perpendicular direction. Available for 1/8 through 1" diameter pins (5mm-25mm in metric sizes). To install, first drill and ream hole for roll pin (furnished), then bore large bushing hole for .0003-.0005 press fit. Press in bushing and roll pin simultaneously for accurate orientation. Patent No. 3,381,554.

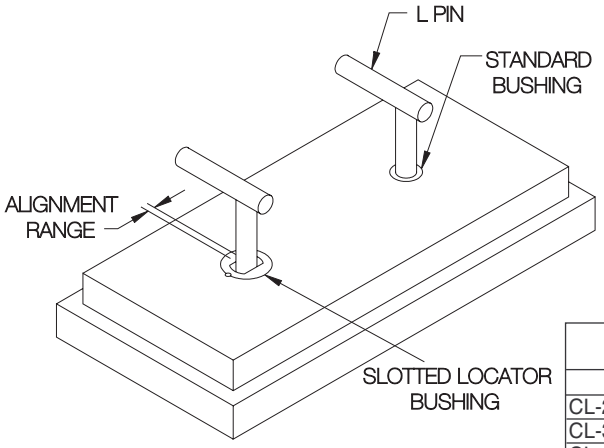

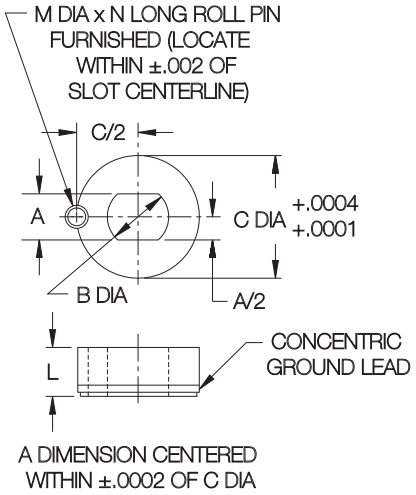

PRESS FIT (USA)

PART NO. STEEL	PART NO. STAINLESS	PIN DIA	A	B DIA	C DIA	L	M DIA	N
CL-2-SLLB	—	1/8	.1251/.1257	.250	.7500	.40	3/16	3/8
CL-3-SLLB-.1285	—	#30	.1286/.1292	.312	.7500	.40		
CL-3-SLLB-.1562	—	5/32	.1563/.1569	.312	.7500	.40		
CL-3-SLLB	CL-3-SLLB-S	3/16	.1876/.1882	.312	.7500	.40		
CL-4-SLLB-.1910	—	#11	.1911/.1917	.375	.7500	.40		
CL-4-SLLB-.1935	—	#10	.1936/.1942	.375	.7500	.40		
CL-4-SLLB-.1960	—	#9	.1961/.1967	.375	.7500	.40		
CL-4-SLLB-.2188	—	7/32	.2189/.2195	.375	.7500	.40		
CL-4-SLLB	CL-4-SLLB-S	1/4	.2501/.2507	.375	.7500	.40		
CL-4A-SLLB	—				1.0000			
CL-5-SLLB-.2570	—	F	.2571/.2577	.437	1.0000	.40		
CL-5-SLLB-.2812	—	9/32	.2813/.2819	.437	1.0000	.40		
CL-5-SLLB	CL-5-SLLB-S	5/16	.3126/.3132	.437	1.0000	.40		
CL-6-SLLB	CL-6-SLLB-S	3/8	.3751/.3757	.500				
CL-8A-SLLB	CL-8A-SLLB-S	1/2	.5001/.5007	.625	1.0000	.40		
CL-8-SLLB	—					.90		
CL-10-SLLB	CL-10-SLLB-S	5/8	.6251/.6257	.750	1.2500	.90		
CL-12-SLLB	CL-12-SLLB-S	3/4	.7501/.7510	.812	1.5000	1.00		
CL-14-SLLB	—	7/8	.8751/.8760	1.000	1.5000	1.00		
CL-16-SLLB	—	1	1.0001/1.0010	1.062	1.5000	1.00		

PRESS FIT (METRIC)

CLM-5-SLLB	—	5mm	.1970/.1980	.315	.7874	.35	5mm	8mm
CLM-6-SLLB	CLM-6-SLLB-S	6mm	.2363/.2373	.354	.7874	.35		
CLM-8-SLLB	CLM-8-SLLB-S	8mm	.3151/.3161	.433	.9449	.35		
CLM-10-SLLB	CLM-10-SLLB-S	10mm	.3938/.3948	.512		.55		
CLM-12-SLLB	CLM-12-SLLB-S	12mm	.4725/.4735	.591		.47		
CLM-16-SLLB	CLM-16-SLLB-S	16mm	.6300/.6310	.709	1.1811	.75		
CLM-20-SLLB	CLM-20-SLLB-S	20mm	.7875/.7885	.866	1.4173	.75		
CLM-25-SLLB	—	25mm	.9844/.9854	1.063	1.5748			

MANUFACTURING CO.
4200 Carr Lane Ct., P.O. Box 191970
St. Louis, Missouri 63119-7970 USA
Phone: 314-647-6200, FAX: 314-647-5736
Web Site: www.carrlane.com

(Rev. 7-10)

SLOTTED LOCATOR BUSHINGS

BUSHING: TOOL STEEL, HEAT TREATED RC 58-62, BLACK OXIDE FINISH
LOCATING TOOL: O-2 DRILL ROD

Press Fit

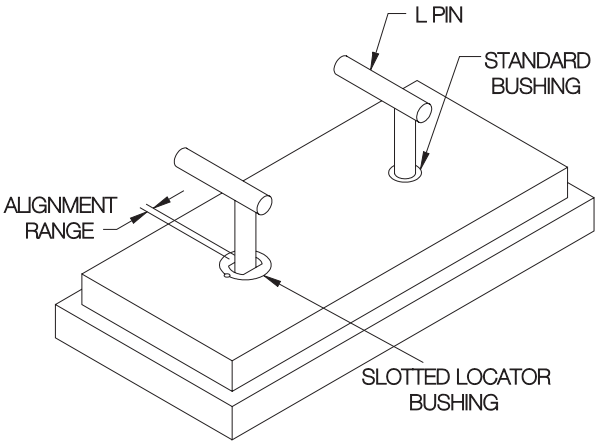

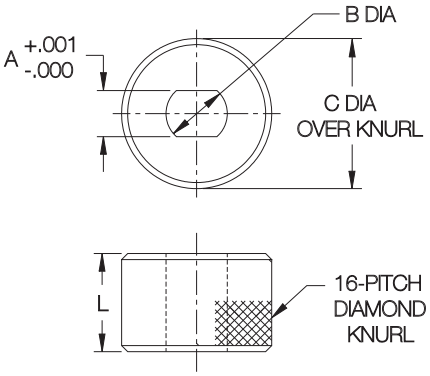

Slotted Locator Bushings with a knurled design for embedding in plastic tooling. Use with L Pins, T Pins, and Shoulder Pins to align two holes without binding. Precision bushing with a tight tolerance in one direction and full relief in the perpendicular direction. Available for 3/16 thrugh 1/2" pin diameters.

KNURLED SLOTTED LOCATOR BUSHINGS (USA)

PART NO.	PIN DIA	A	B DIA	C DIA	L
CL-30-SLLB	3/16	.188	.312	.565	1/2
CL-40-SLLB	1/4	.250	.375	.640	
CL-50-SLLB	5/16	.313	.437	.765	
CL-60-SLLB	3/8	.375	.500	.890	
CL-80-SLLB	1/2	.500	.625	1.015	

Locating Tool

NEW!

Handy locating tool for holding knurled Slotted Locator Bushings in place during embediment. This stepped locating pin has a slip-fit-tolerance shank to fit a locating liner bushing in a template plate, and a head diameter with flats to fit a Slotted Locator Bushing perfectly.

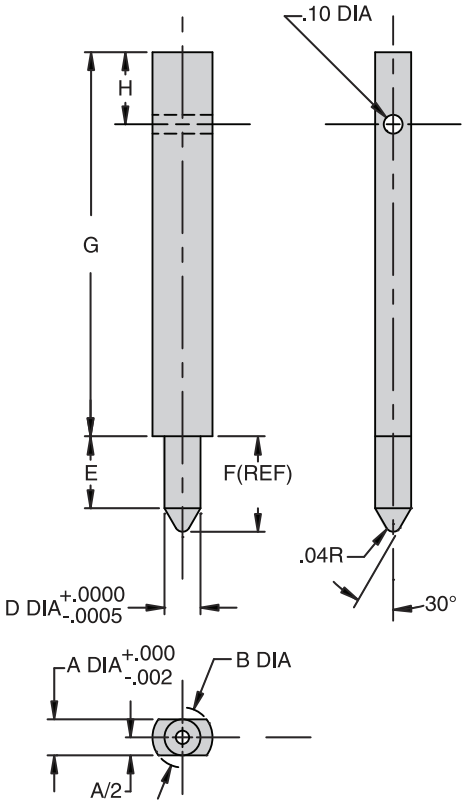

LOCATING TOOLS (USA)

PART NO.	PIN DIA	A	B DIA	D DIA	E	F	G	H
CL-3-SLLT	3/16	.188	.312	.1875	.37	.50	2.00	.37
CL-4-SLLT	1/4	.250	.375	.2500	.50	.68		
CL-5-SLLT	5/16	.313	.437	.3125	.50	.73		
CL-6-SLLT	3/8	.375	.500	.3750	.50	.78		
CL-8-SLLT	1/2	.500	.625	.5000	.50	.89		

CarrLane®
MANUFACTURING CO.
4200 Carr Lane Ct., P.O. Box 191970
St. Louis, Missouri 63119-7970 USA
Phone: 314-647-6200, FAX: 314-647-5736
Web Site: www.carrlane.com

(Rev. 8-10)

SLOTTED LOCATOR TEMPLATE BUSHINGS

BUSHING: 1144 STEEL, HEAT TREATED, BLACK OXIDE FINISH
RETAINER RING: ALUMINUM

Retainer Ring

Bushing

NEW!

These Slotted Locator Bushings are designed for thin template jig plates from 3/64" to 3/8" thick. Use with L Pins, T Pins, or Shoulder Pins to align two holes without binding. Precision bushing with a tight tolerance in one direction and full relief in the perpendicular direction. Bushings are held in place by a threaded Retainer Ring (order separately). Flush contact of the Retainer Ring against the jig plate ensures perpendicularity. OD serrations prevent the bushing from rotating. Threaded Template Bushings can be easily removed to replace or reuse. Available for pin diameters from 3/16 to 3/4".

To install, drill hole in jig plate to nominal bushing OD (B diameter). Countersink 90° to allow bushing to seat flush to .015" below surface of plate. Install and tighten Retainer Ring to secure. To make Retainer Ring installation easier, we offer a handy Socket-Type Installation Tool that fits 1/4" square drives — see page 51BU.

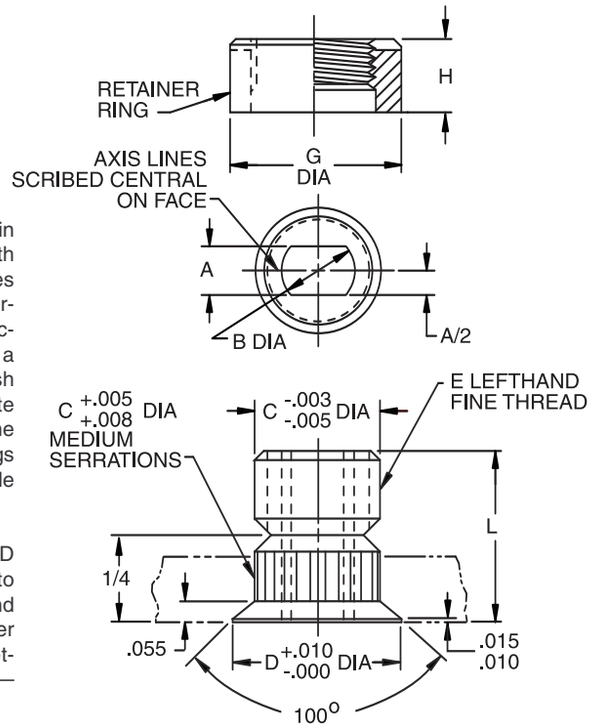

USA

PART NO.	PIN DIA	A	B DIA	C DIA	D DIA	E	L	RETAINER RING PART NO.	TEMPLATE THICKNESS	G DIA	H
CL-40-SLTB-.1875	3/16	.1876/.1882	3/8	.625	.725	5/8-18 LH	1/2	TTR-40-6	.047-.125	3/4	3/8
								TTR-40-5	.126-.188		5/16
								TTR-40-3	.189-.375		3/16
CL-40-SLTB-.1935	#10	.1936/.1942	3/8	.625	.725	5/8-18 LH	1/2	TTR-40-6	.047-.125	3/4	3/8
								TTR-40-5	.126-.188		5/16
								TTR-40-3	.189-.375		3/16
CL-40-SLTB-.2500	1/4	.2501/.2507	3/8	.625	.725	5/8-18 LH	1/2	TTR-40-6	.047-.125	3/4	3/8
								TTR-40-5	.126-.188		5/16
								TTR-40-3	.189-.375		3/16
CL-48-SLTB-.3125	5/16	.3126/.3132	7/16	.750	.850	3/4-16 LH	1/2	TTR-48-6	.047-.125	1	3/8
								TTR-40-5	.126-.188		5/16
								TTR-40-3	.189-.375		3/16
CL-48-SLTB-.3750	3/8	.3752/.3757	1/2	.750	.850	3/4-16 LH	1/2	TTR-48-6	.047-.125	1	3/8
								TTR-40-5	.126-.188		5/16
								TTR-40-3	.189-.375		3/16
CL-48-SLTB-.5000	1/2	.5001/.5007	5/8	.750	.850	3/4-16 LH	1/2	TTR-48-6	.047-.125	1	3/8
								TTR-40-5	.126-.188		5/16
								TTR-40-3	.189-.375		3/16
CL-64-SLTB-.6250	5/8	.6251/.6257	3/4	1.000	1.100	1"-14 LH	5/8	TTR-64-6	.047-.125	1-1/4	3/8
								TTR-40-5	.126-.188		5/16
								TTR-40-3	.189-.375		3/16
CL-64-SLTB-.7500	3/4	.7501/.7510	13/16	1.000	1.100	1"-14 LH	5/8	TTR-64-6	.047-.125	1-1/4	3/8
								TTR-40-5	.126-.188		5/16
								TTR-40-3	.189-.375		3/16

Carr Lane®
MANUFACTURING CO.
4200 Carr Lane Ct., P.O. Box 191970
St. Louis, Missouri 63119-7970 USA
Phone: 314-647-6200, FAX: 314-647-5736
Web Site: www.carrlane.com

(Rev. 6-10)

TECHNICAL INFORMATION
BALL LOCK PINS

Pages 10-11

Pages 13

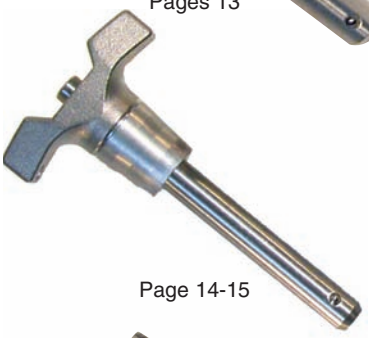

Page 14-15

Pages 16-17

Pages 18-19

Page 20

BALL LOCK PINS

Precision alignment pin with a ground shank. This popular single-acting type is positive locking until released by pushing the button, which moves the center spindle forward to allow the locking balls to retract into a radial groove. Widest range of types and sizes, in steel or stainless steel. Choice of four handle styles: T, L, Button, and Ring. Standard shank diameters from 3/16 to 1" (5 to 20mm in metric). Any grip length up to 6" (150mm in metric) is available as standard, at no extra charge. Available from stock in many standard grip lengths, or quickly made to order in custom lengths and diameters.

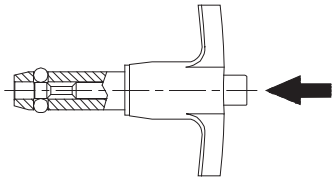

MARINE BALL LOCK PINS

Similar to our standard single-acting Ball Lock Pins in stainless steel, except this type has its handle and button made of 300-series stainless steel. Choice of two handle styles: Recessed Button and Ring. Shank diameters from 3/16 to 1/2", each available in a choice of several standard grip lengths. Available from stock only (not made to order).

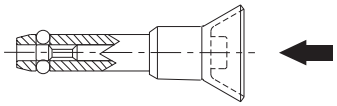

HEAVY-DUTY BALL LOCK PINS

Similar to our standard single-acting Ball Lock Pins, except with a heavier handle for rough service. Available only in stainless steel. Handles are made of solid stainless steel for maximum impact strength (high-strength reinforced plastic optional), and are specially shaped to prevent accidentally pressing the release button. Choice of four handle styles: T, L, Button, and Ring. Shank diameters from 3/16 to 1/2" (5 to 12mm in metric), each in a choice of several standard grip lengths. Available from stock only (not made to order).

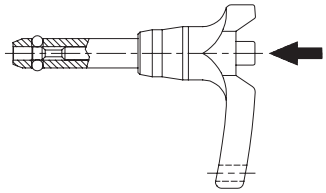

ADJUSTABLE BALL LOCK PINS

These Ball Lock Pins have an adjustable grip length. They can be used for clamping, or simply to provide a variable grip length. The threaded handle turns to provide a 1/2" clamping range or adjustment range. Available in steel or stainless steel. Choice of three handle styles: Knob, T, and L. Standard shank diameters from 1/4 to 1" (6 to 20mm in metric), each in a choice of many standard grip lengths. Other grip lengths are available as specials (extra charge and longer delivery time).

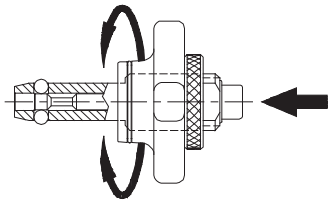

DOUBLE-ACTING BALL LOCK PINS

Similar to a single-acting pin, except the center spindle has *two* grooves instead of one, to release the ball by either pushing or pulling. Pushing on the handle releases the balls and inserts the pin in one motion. Pulling on the handle releases the balls and removes the pin in one motion. Available in steel or stainless steel. Choice of three handle styles: T, L, and Ring. Standard shank diameters from 3/16 to 1" (5 to 20mm in metric). Any grip length up to 6" (150mm in metric) is available as a standard, at no extra charge. Available from stock in some standard grip lengths, or quickly made to order in custom lengths and diameters.

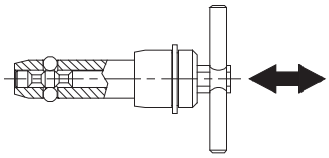

LIFTING PINS

A single-acting ball lock pin with a solid, one-piece body and four balls for high tension loads. Positive locking until released by pushing the button. Sturdy forged shackle for heavy lifting. Shank diameters from 1/4 to 1", each in a choice of several standard grip lengths. Available from stock only (not made to order).

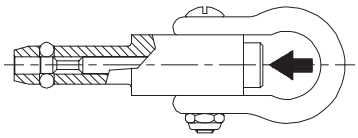

Carr Lane®
MANUFACTURING CO.
4200 Carr Lane Ct., P.O. Box 191970
St. Louis, Missouri 63119-7970 USA
Phone: 314-647-6200, FAX: 314-647-5736
Web Site: www.carrlane.com

(Rev. 1-06)

MATERIAL SPECIFICATIONS

(Any options listed below are manufacturing options, not options selectable by the customer.)

COMPONENT	ALLOY STEEL PINS	STAINLESS STEEL PINS
Shank	4130 steel, heat treated, 160,000 psi min. tensile strength, zinc or cadmium plated**	17-4 PH, heat treated, 180,000 psi min. tensile strength, or equivalent (300 Series on Detent Pins)**
Spindle	4130 steel or 416 stainless	17-4 PH or 416 stainless steel
Handle-BLPT,BLPL,ABP	Aluminum alloy, black or plain finish	Aluminum alloy, black or plain finish
Handle-BLPR,BLPB,BPD	Carbon steel, zinc or cadmium plated, or aluminum alloy, black finish	303 stainless, or aluminum alloy, black finish
Collar	Carbon steel, zinc or cadmium plated	303 stainless
Button	Carbon steel, zinc or cadmium plated, or aluminum alloy, anodized	302 or 303 stainless, or aluminum alloy, anodized
Balls	440 C stainless	440 C stainless
Spring	17-7PH, 302 stainless, or music wire	17-7PH or 302 stainless
Handle Ring	Carbon steel, zinc or cadmium plated, or 302 stainless	302 stainless
S-Hook	Carbon steel, zinc or cadmium plated, or 302 stainless	302 stainless
S-Hook Band	Carbon steel, zinc or cadmium plated, or 15-7MO or 302 stainless	15-7MO or 302 stainless

STRENGTH DATA (USA)

NOM. DIA	RECOMMENDED HOLE DIA		BLP, BPD, ABP APPROXIMATE PULL OUT STRENGTH (LBS)	BLP, BPD, ABP, LFP CALCULATED DOUBLE SHEAR STRENGTH (LBS)***		DEP CALCULATED DOUBLE SHEAR STRENGTH (LBS)***		BLP, BPD APPROX. WEIGHT (OUNCES)		DEP INSERTION/ REMOVAL FORCE (LBS)	
	MAX	MIN		STEEL	STAINLESS	STEEL	STAINLESS	HANDLE	PER IN.	MAX	MIN
3/16 (#10)	.194	.190	200	2,100	2,300	2,200	2,000	1.25	.15	7	2
1/4	.254	.250	230	4,000	4,500	4,200	2,200	1.75	.25	7	2
5/16	.317	.313	510	6,000	7,100	6,700	3,500	2.00	.40	14	6
3/8	.379	.375	575	9,200	10,200	9,700	5,000	2.40	.50	14	6
7/16	.443	.438	710	12,300	13,600	13,200	7,000	2.90	.62	17	8
1/2	.505	.500	1160	16,000	18,000	17,500	9,200	3.40	.80	22	10
9/16	.568	.563	1420	20,500	23,000	22,000	11,500	3.65	1.20	22	10
5/8	.630	.625	2070	25,500	28,700	27,500	13,500	4.00	1.35	30	15
3/4	.757	.750	2970	36,700	41,000	39,500	20,500	4.25	2.30	30	15
7/8	.882	.875	3900	50,000	56,200	50,000	28,500	8.31	2.73	35	20
1	1.010	1.000	5400	65,500	73,500	70,700	37,200	9.00	3.47	40	20

STRENGTH DATA (METRIC)

5mm	.201	.197	230	2,600	3,000	2,500	1,400	1.25	.15	7	2
6mm	.240	.236	230	4,000	4,400	4,000	2,100	1.75	.25	7	2
8mm	.319	.315	510	7,000	8,000	7,200	3,700	2.00	.40	14	6
10mm	.398	.394	710	11,000	12,500	11,400	5,800	2.40	.50	14	6
12mm	.477	.472	1160	16,000	18,000	16,500	8,500	3.40	.80	22	10
16mm	.635	.630	2070	29,000	32,500	29,500	15,400	4.00	1.35	30	15
20mm	.794	.787	2970	45,200	50,900	46,100	21,600	4.25	2.30	30	15

MS CONVERSIONS

(MS-certified pins available as specials at higher cost)

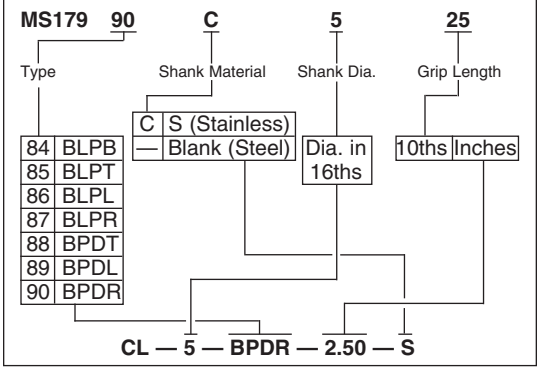

**Pins with grip lengths over 8" (special) are not heat treated, in order to maintain straightness. Double shear strength will be reduced approximately 20-50%. Steel pins over 8" long will have a black oxide finish instead of plating. Pins in larger diameters than listed here are available as specials (may be made from alternate steels).

***2:1 Safety factor

NAS CONVERSIONS

(NAS-certified pins available as specials at higher cost)

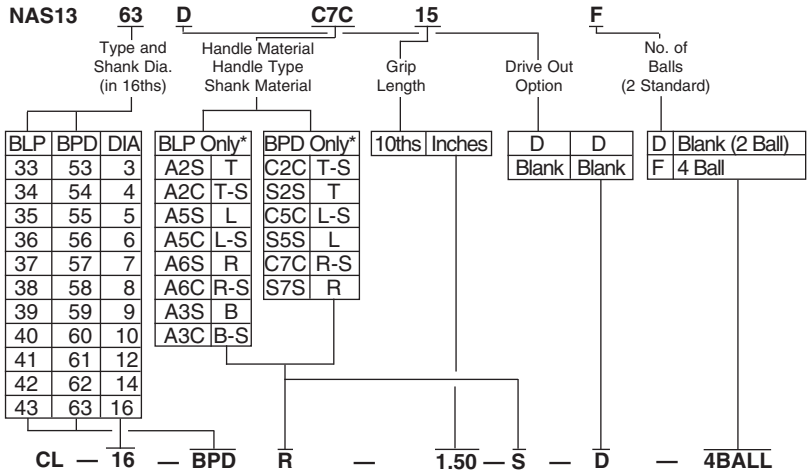

*These are the only standard combinations of Handle Material, Handle Style, Spindle Material, and BLP-BPD type directly convertible from NAS to Carr Lane. Other combinations are available as specials.

Carr Lane MANUFACTURING CO.
4200 Carr Lane Ct., P.O. Box 191970
St. Louis, Missouri 63119-7970 USA
Phone: 314-647-6200, FAX: 314-647-5736
Web Site: www.carrlane.com

(Rev. 7-08)

BALL LOCK PINS

SEE PAGE 9 FOR MATERIAL SPECIFICATIONS

T Handle

L Handle

Button Handle

Ring Handle

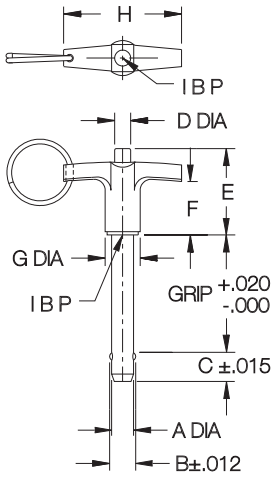

BLPT

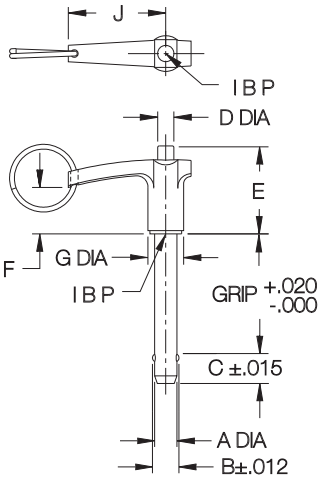

BLPL

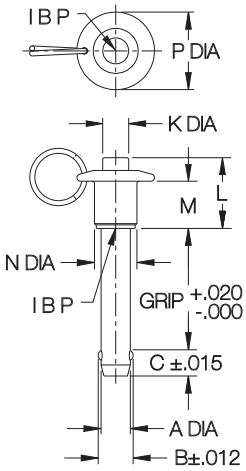

BLPB

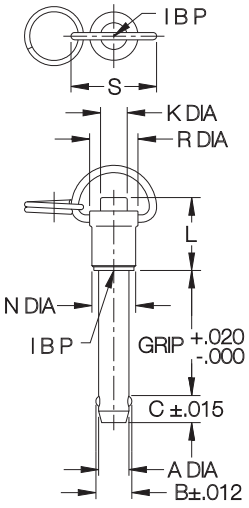

BLPR

USA

PART NO.	A DIA NOMINAL	A DIA ACTUAL	B	C	D DIA	E	F	G DIA	H	J	K DIA	L	M	N DIA	P DIA	R DIA	S
CL- 3-BLPx-x.xx	3/16 (#10)	.1885/.1870	.219	.245	.22	1.26	.78	.47	1.75	1.50	.22	1.26	.89	.47	.82	.57	1.13
CL- 4-BLPx-x.xx	1/4	.2485/.2470	.290	.275													
CL- 5-BLPx-x.xx	5/16	.3110/.3095	.375	.315													
CL- 6-BLPx-x.xx	3/8	.3735/.3720	.438	.350	.27	1.47	.94	.59	2.00	1.62	.27	1.47	1.02	.59	1.00	.69	1.13
CL- 7-BLPx-x.xx	7/16	.4360/.4345	.508	.365													1.33
CL- 8-BLPx-x.xx	1/2	.4985/.4970	.592	.445	.39	1.61	1.06	.75	2.25	1.88	.39	1.61	1.08	.75	1.31	.82	1.33
CL- 9-BLPx-x.xx	9/16	.5610/.5595	.666	.495													
CL-10-BLPx-x.xx	5/8	.6235/.6220	.750	.565	.50	1.81	1.06	.93	3.00	2.50	.50	1.81	1.25	.93	1.56	1.01	1.33
CL-12-BLPx-x.xx	3/4	.7485/.7470	.886	.655													1.74
CL-14-BLPx-x.xx	7/8	.8735/.8720	1.044	.745	.71	2.07	1.25	1.31	3.50	2.90	.71	2.07	1.49	1.31	2.16	1.41	1.90
CL-16-BLPx-x.xx	1	.9985/.9970	1.217	.875													

METRIC

CLM-5-BLPx-xx	5mm	.1954/.1939	.212	.245	.22	1.26	.78	.47	1.75	1.50	.22	1.26	.89	.47	.82	.57	1.13
CLM-6-BLPx-xx	6mm	.2347/.2332	.278	.275													
CLM-8-BLPx-xx	8mm	.3135/.3120	.371	.315													
CLM-10-BLPx-xx	10mm	.3922/.3907	.469	.350	.27	1.47	.94	.59	2.00	1.62	.27	1.47	1.02	.59	1.00	.69	1.13
CLM-12-BLPx-xx	12mm	.4709/.4694	.567	.445							.39	1.61	1.08	.75	1.31	.82	1.33
CLM-16-BLPx-xx	16mm	.6284/.6269	.748	.565	.50	1.81	1.06	.93	3.00	2.50	.50	1.81	1.25	.93	1.56	1.01	1.33
CLM-20-BLPx-xx	20mm	.7859/.7844	.948	.795							.71	2.07	1.49	1.31	2.16	1.41	1.74

Carr Lane®
MANUFACTURING CO.
4200 Carr Lane Ct., P.O. Box 191970
St. Louis, Missouri 63119-7970 USA
Phone: 314-647-6200, FAX: 314-647-5736
Web Site: www.carrlane.com

(Rev. 6-04)

BALL LOCK PINS

SEE PAGE 9 FOR MATERIAL SPECIFICATIONS

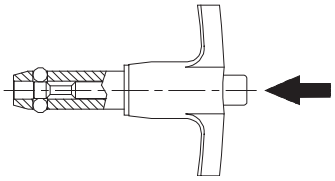

Precision alignment pin with a ground shank. This popular single-acting type is positive locking until released by pushing the button, which moves the center spindle forward to allow the locking balls to retract into a radial groove. Widest range of types and sizes, in steel or stainless steel. Choice of four handle styles: T, L, Button, and Ring. Standard shank diameters from 3/16 to 1" (5 to 20mm in metric). Any grip length up to 6" (150mm in metric) is available as standard, at no extra charge. Available from stock in many standard grip lengths, or quickly made to order in custom lengths and diameters.

Ordering Example (USA):

CL — 4 — BLPR — 1.50 — S — 4BALL — C

- 4 — Diameter (16ths of an inch)
- BLPR — Handle type (T, L, B, R)
- 1.50 — Grip length (inches)
- S — Add -S for stainless steel (steel is standard)
- 4BALL — Add for 4 balls (2 are standard)
- C — Add -C for attached cable assembly

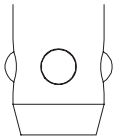

Options

Ball Lock Pins are optionally available in stainless steel instead of alloy steel for greater corrosion resistance. (Note: Both types have aluminum handles, and buttons.) Pins are also available with four balls instead of two, as specials, for more-distributed ball-contact force. Optional cable assemblies are 12" long, with a terminal at the free end for a #10-32 or M5 attachment screw (CL-82-KA-12.0).

Ordering Example (Metric):

CLM — 6 — BLPR — 50 — S — 4BALL — C

- CLM — Add M for metric
- 6 — Diameter (mm)
- BLPR — Handle type (T, L, B, R)
- 50 — Grip length (mm)
- S — Add -S for stainless steel (steel is standard)
- 4BALL — Add for 4 balls (2 are standard)
- C — Add -C for attached cable assembly

STOCK GRIP LENGTHS (USA)

PART NO.	NOMINAL SHANK DIA	GRIP LENGTH (INCHES)															
		.50 TLBR	.75 TLBR	1.00 TLBR	1.25 TLBR	1.50 TLBR	1.75 TLBR	2.00 TLBR	2.25 TLBR	2.50 TLBR	3.00 TLBR	3.50 TLBR	4.00 TLBR	4.50 TLBR	5.00 TLBR	5.50 TLBR	6.00 TLBR
CL-3-BLPx-x.xx	3/16 (#10)	●●●●	● ●	XXXX	X●●●	XXXX		X●●●		●●●	●●●●	●	●				
CL-4-BLPx-x.xx	1/4	XXX●	X●X●	XXXX	X●●●	XXXX	●●●●	XXXX	●●●●	XXX●	X●X●	●●●●	X●●●	●●●	●●		●
CL-5-BLPx-x.xx	5/16	●●●	● ●	XXX●	●●●●	XXX●	● ●	XXX●	●	XX●●	●●●●	●●●●	●●●●	●	●		●
CL-6-BLPx-x.xx	3/8	●●●	X●●	XXXX	●●●●	XXXX	●●●●	XXX●	●●●●	XXX●	XXX●	XXX●	X●●●	X●●	●●●●	●	●●
CL-7-BLPx-x.xx	7/16			●●●		●●●		●●●		●●	●●		●				
CL-8-BLPx-x.xx	1/2	●	●●	X●●●	XX●	XXX●	XX●●	XXX●	●●	XXX●	XX●●	X●●●	X●●●	●●●●	●●●●	●●●	X●●●
CL-9-BLPx-x.xx	9/16							●●●		●●●	●●		●				
CL-10-BLPx-x.xx	5/8					●●●		●●●		●●●	●●●	●●●	●●	●●	●●	●●	●
CL-12-BLPx-x.xx	3/4					●●		X●●●		XX●●	XX●●	X●	X●●	●●	X●●●	●●	X●
CL-14-BLPx-x.xx	7/8							●●		●●	●●						
CL-16-BLPx-x.xx	1							●●		●	●●●	●●	●●	●	●●		●●

STOCK GRIP LENGTHS (METRIC)

PART NO.	NOMINAL SHANK DIA	GRIP LENGTH (mm)											
		10 TLBR	15 TLBR	20 TLBR	25 TLBR	30 TLBR	40 TLBR	50 TLBR	60 TLBR	70 TLBR	80 TLBR	90 TLBR	100 TLBR
CLM-5-BLPx-xx	5mm												
CLM-6-BLPx-xx	6mm	●●	●●	●●	●●	●●	●●	●●					●●
CLM-8-BLPx-xx	8mm			●	●	●	●	●●					
CLM-10-BLPx-xx	10mm				●●	●●	●●	●●					●●
CLM-12-BLPx-xx	12mm					●●	●●	●●			●		●●
CLM-16-BLPx-xx	16mm							●●					
CLM-20-BLPx-xx	20mm												

● = STOCKED IN ALLOY STEEL ONLY
X = STOCKED IN ALLOY AND STAINLESS STEEL

Carr Lane®
MANUFACTURING CO.
4200 Carr Lane Ct., P.O. Box 191970
St. Louis, Missouri 63119-7970 USA
Phone: 314-647-6200, FAX: 314-647-5736
Web Site: www.carrlane.com

(Rev. 11-09)

MARINE BALL LOCK PINS

NEW HANDLE STYLE!

Button Handle (B)

Recessed Button Handle (M)

Ring Handle (R)

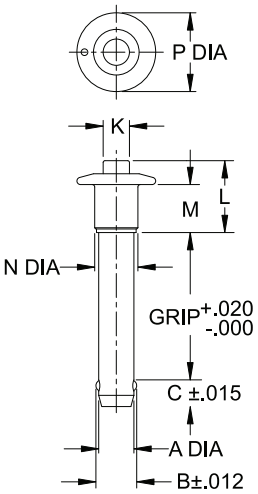

MBPB

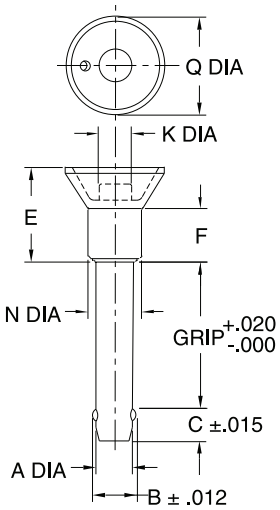

MBPM

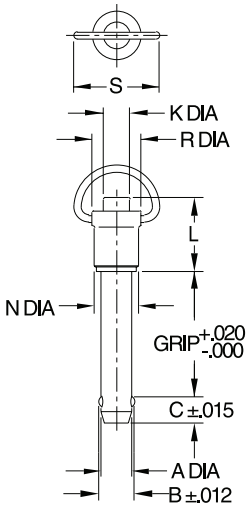

MBPR

USA

PART NO.	A DIA NOMINAL	A DIA ACTUAL	B	C	E	F	K DIA	L	M	N DIA	P DIA	Q DIA	R	S	T
CL-3-MBPx-x.xx-S	3/16 (#10)	.1885/.1870	.219	.245	.94	.62	.25	.81	.56	.47	.79	1.00	.52	1.13	1.26
CL-4-MBPx-x.xx-S	1/4	.2485/.2470	.290	.275											
CL-5-MBPx-x.xx-S	5/16	.3110/.3095	.375	.315	1.00	.68		.92	.65		.88		.58		
CL-6-MBPx-x.xx-S	3/8	.3735/.3720	.438	.350	1.06	.78	.31	.98	.65	.59	1.00	1.00	.64	1.13	1.47
CL-8-MBPx-x.xx-S	1/2	.4985/.4970	.592	.445	1.19	.93	.44	1.20	.80	.75	1.31	1.12	.80	1.33	1.61

METRIC

CLM-5-MBPx-xx-S	5mm	.1954/.1939	.212	.245	.94	.62	.22	.81	.56	.47	.82	1.00	.52	1.13	1.26
CLM-6-MBPx-xx-S	6mm	.2347/.2332	.278	.275											
CLM-8-MBPx-xx-S	8mm	.3135/.3120	.371	.315	1.00	.68		.92	.65				.58		
CLM-10-MBPx-xx-S	10mm	.3922/.3907	.469	.350	1.06	.78	.27	.98	.65	.59	1.00	1.00	.64	1.13	1.47
CLM-12-MBPx-xx-S	12mm	.4709/.4694	.567	.445	1.19	.93	.39	1.20	.80	.75	1.31	1.33	.80	1.33	1.61

Carr Lane®
MANUFACTURING CO.
4200 Carr Lane Ct., P.O. Box 191970
St. Louis, Missouri 63119-7970 USA
Phone: 314-647-6200, FAX: 314-647-5736
Web Site: www.carrlane.com

(Rev. 4-07)

MARINE BALL LOCK PINS

SHANK & SPINDLE: 17-4PH STAINLESS STEEL
HANDLE AND BUTTON: 300-SERIES STAINLESS STEEL
SPRING: 17-7 OR 300-SERIES STAINLESS STEEL
BALLS: 440C OR 300-SERIES STAINLESS STEEL

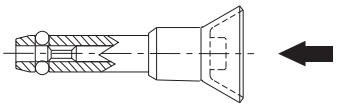

Similar to our standard single-acting Ball Lock Pins in stainless steel, except this type has its handle and button made of 300-series stainless steel. Choice of three handle styles: Buttons, Recessed Button and Ring. Shank diameters from 3/16 to 1/2" (5 to 12mm in metric), each available in a choice of several standard grip lengths. Available from stock only in the standard grip lengths listed below (other grip lengths available as specials).

Ordering Example (USA):

CL — 4 — MBPR — 1.50 — S — C

- 4 — Diameter (16ths)
- MBPR — Handle type (B, M, or R)
- 1.50 — Grip length (inches)
- C — Add -C for attached cable assembly

Optional Cable

Optional cable assemblies are 12" long, #2 cable, with a terminal at the free end for a #10 or M5 attachment screw.

NOW ALSO AVAILABLE IN METRIC!

Ordering Example (Metric):

CLM — 6 — MBPR — 50 — S — C

- 6 — Diameter (mm)
- MBPR — Diameter (mm)
- 50 — Handle type (B, M, or R)
- S — Grip length (mm)
- C — Add -C for attached cable assembly

STANDARD STOCK GRIP LENGTHS (USA)

PART NO.	NOMINAL SHANK DIA	GRIP LENGTH (INCHES)												
		0.50 BMR	0.75 BMR	1.00 BMR	1.25 BMR	1.50 BMR	1.75 BMR	2.00 BMR	2.25 BMR	2.50 BMR	3.00 BMR	3.50 BMR	4.00 BMR	4.50 BMR
CL-3-MBPx-x.xx-S	3/16 (#10)	xxx	xxx	xxx	xxx	xxx		xxx		xxx	xxx			
CL-4-MBPx-x.xx-S	1/4	xxx	xxx	xxx	xxx	xxx	xxx	xxx	xxx	xxx	xxx			
CL-5-MBPx-x.xx-S	5/16		xxx	xxx	xxx	xxx	xxx	xxx	xxx	xxx	xxx	xxx	xxx	
CL-6-MBPx-x.xx-S	3/8		xxx	xxx	xxx	xxx	xxx	xxx	xxx	xxx	xxx	xxx	xxx	
CL-8-MBPx-x.xx-S	1/2			xxx		xxx		xxx		xxx	xxx	xxx	xxx	xxx

STANDARD STOCK GRIP LENGTHS (METRIC)

PART NO.	NOMINAL SHANK DIA	GRIP LENGTH (mm)										
		10 BMR	15 BMR	20 BMR	25 BMR	30 BMR	40 BMR	50 BMR	60 BMR	70 BMR	80 BMR	100 BMR
CLM-5-MBP-xx-S	5mm	xxx	xxx	xxx	xxx	xxx	xxx	xxx				
CLM-6-MBP-xx-S	6mm	xxx	xxx	xxx	xxx	xxx	xxx	xxx	xxx			
CLM-8-MBP-xx-S	8mm			xxx	xxx	xxx	xxx	xxx	xxx		xxx	xxx
CLM-10-MBP-xx-S	10mm			xxx	xxx	xxx	xxx	xxx	xxx		xxx	xxx
CLM-12-MBP-xx-S	12mm				xxx	xxx	xxx	xxx	xxx		xxx	xxx

X = STOCKED IN STAINLESS STEEL

Carr Lane®
MANUFACTURING CO.
4200 Carr Lane Ct., P.O. Box 191970
St. Louis, Missouri 63119-7970 USA
Phone: 314-647-6200, FAX: 314-647-5736
Web Site: www.carrlane.com

(Rev. 10-02)

HEAVY-DUTY BALL LOCK PINS

T Handle

L Handle

Button Handle

Ring Handle

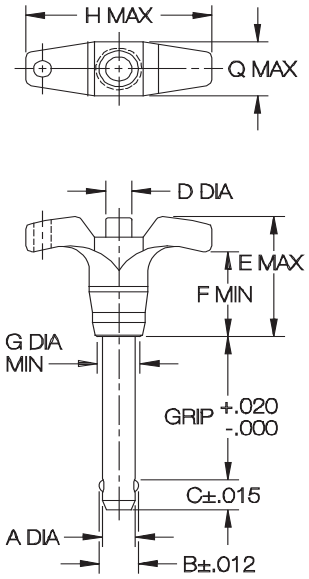

BLHT

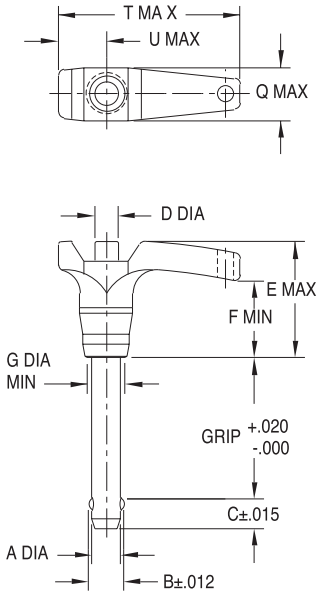

BLHL

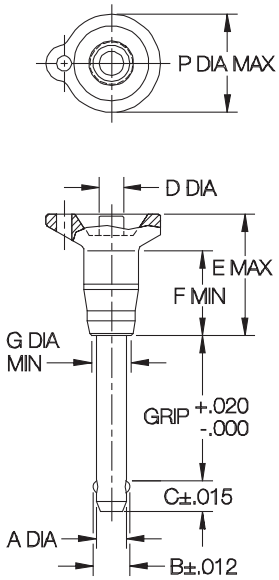

BLHB

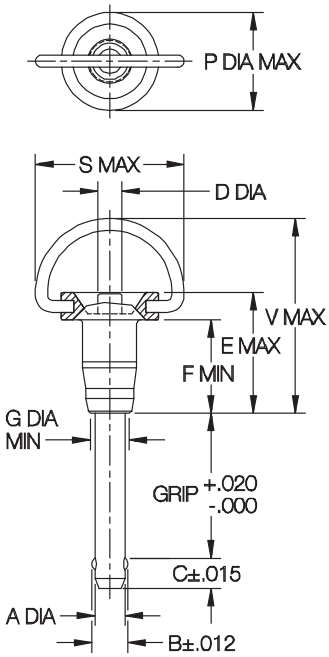

BLHR

USA

PART NO.	A DIA NOMINAL	A DIA ACTUAL	B	C	D DIA	E	F	G DIA	H	P DIA	Q	S	T	U	V
CL-3-BLHx-x.xx-S	3/16 (#10)	.1885/.1870	.220	.245	.25	1.27	.70	.38	1.82	1.07	.63	1.56	1.95	.54	2.13
CL-4-BLHx-x.xx-S	1/4	.2485/.2470	.289	.275											
CL-5-BLHx-x.xx-S	5/16	.3110/.3095	.375	.315											
CL-6-BLHx-x.xx-S	3/8	.3735/.3720	.440	.350	.30	1.60	.85	.51	2.35	1.39	.80	2.00	2.51	.70	2.34
CL-7-BLHx-x.xx-S	7/16	.4360/.4345	.509	.365											
CL-8-BLHx-x.xx-S	1/2	.4985/.4970	.594	.445											

METRIC

CLM-5-BLHx-xx-S	5mm	.1954/.1939	.210	.245	.25	1.27	.70	.38	1.82	1.07	.63	1.56	1.95	.54	2.13
CLM-6-BLHx-xx-S	6mm	.2347/.2332	.275	.275											
CLM-8-BLHx-xx-S	8mm	.3135/.3120	.371	.315											
CLM-10-BLHx-xx-S	10mm	.3922/.3907	.467	.350	.30	1.60	.85	.51	2.35	1.39	.80	2.00	2.51	.70	2.34
CLM-12-BLHx-xx-S	12mm	.4709/.4694	.569	.445											

Carr Lane®
MANUFACTURING CO.
4200 Carr Lane Ct., P.O. Box 191970
St. Louis, Missouri 63119-7970 USA
Phone: 314-647-6200, FAX: 314-647-5736
Web Site: www.carrlane.com

(Rev. 12-07)

HEAVY-DUTY BALL LOCK PINS

SHANK & SPINDLE: 17-4PH OR 15-7MO STAINLESS STEEL
HANDLE: 17-4PH STAINLESS STEEL
HEAD & BUTTON: 303 STAINLESS STEEL
R-HANDLE RING: 302 STAINLESS STEEL
SPRING & ATTACHING RING: 17-7PH OR 302 STAINLESS STEEL
BALLS: 440C STAINLESS STEEL

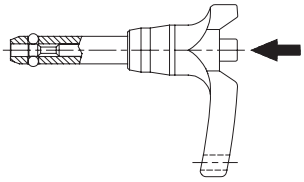

Similar to our standard single-acting Ball Lock Pins, except with a heavier handle for rough service. Available only in stainless steel. Handles are made of solid stainless for maximum impact strength, and are specially shaped to prevent accidentally pressing the release button. Choice of four handle styles: T, L, Button, and Ring. Shank diameters from 3/16 to 1/2" (5 to 12mm in metric), each in a choice of several standard grip lengths. Available from stock only (not made to order).

Ordering Example (USA):

CL — 4 — BLHR — 1.50 — S — C

- Diameter (16ths of an inch)
- Handle type (T, L, B, R)
- Grip length (inches)
- Add -C for attached cable assembly

OPTIONS

Heavy-duty Ball Lock Pins are available only in stainless steel, with either a stainless steel handle or a plastic handle for lower cost. Optional cable assemblies are 12" long, with a terminal at the free end for a #10-32 or M5 attachment screw.

Ordering Example (Metric):

CLM — 6 — BLHR — 50 — S — C

- Add M for metric
- Diameter (mm)
- Handle type (T, L, B, R)
- Grip length (mm)
- Add -C for attached cable assembly

STANDARD STOCK GRIP LENGTHS (USA)

PART NO.	NOMINAL SHANK DIA	GRIP LENGTH (INCHES)														
		.50 TLBR	.75 TLBR	1.00 TLBR	1.25 TLBR	1.50 TLBR	1.75 TLBR	2.00 TLBR	2.25 TLBR	2.50 TLBR	3.00 TLBR	3.50 TLBR	4.00 TLBR	4.50 TLBR	5.00 TLBR	6.00 TLBR
CL-3-BLHx-x.xx-S	3/16 (#10)	xxxx	xxxx	xxxx	xxxx	xxxx		xxxx		xxxx	xxxx					
CL-4-BLHx-x.xx-S	1/4	xxxx	xxxx	xxxx	xxxx	xxxx	xxxx	xxxx	xxxx	xxxx	xxxx	xxxx	xxxx	xxxx	xxxx	xxxx
CL-5-BLHx-x.xx-S	5/16	xxxx	xxxx	xxxx	xxxx	xxxx	xxxx	xxxx	xxxx	xxxx	xxxx	xxxx	xxxx			
CL-6-BLHx-x.xx-S	3/8	xxxx	xxxx	xxxx	xxxx	xxxx	xxxx	xxxx	xxxx	xxxx	xxxx	xxxx	xxxx	xxxx	xxxx	xxxx
CL-7-BLHx-x.xx-S	7/16			xxxx		xxxx		xxxx		xxxx	xxxx					
CL-8-BLHx-x.xx-S	1/2			xxxx	xxxx	xxxx	xxxx	xxxx	xxxx	xxxx	xxxx	xxxx	xxxx	xxxx	xxxx	xxxx

STOCK GRIP LENGTHS (METRIC)

PART NO.	NOMINAL SHANK DIA	GRIP LENGTH (mm)										
		10 TLBR	15 TLBR	20 TLBR	25 TLBR	30 TLBR	40 TLBR	50 TLBR	60 TLBR	70 TLBR	80 TLBR	100 TLBR
CLM-5-BLHx-xx-S	5mm	xxxx	xxxx	xxxx	xxxx	xxxx	xxxx	xxxx				
CLM-6-BLHx-xx-S	6mm	xxxx	xxxx	xxxx	xxxx	xxxx	xxxx	xxxx	xxxx			xxxx
CLM-8-BLHx-xx-S	8mm			xxxx	xxxx	xxxx	xxxx	xxxx	xxxx			xxxx
CLM-10-BLHx-xx-S	10mm			xxxx	xxxx	xxxx	xxxx	xxxx	xxxx		xxxx	xxxx
CLM-12-BLHx-xx-S	12mm				xxxx	xxxx	xxxx	xxxx	xxxx	xxxx	xxxx	xxxx

X = Stocked in stainless steel.

Carr Lane®
MANUFACTURING CO.
4200 Carr Lane Ct., P.O. Box 191970
St. Louis, Missouri 63119-7970 USA
Phone: 314-647-6200, FAX: 314-647-5736
Web Site: www.carrlane.com

(Rev. 9-09)

ADJUSTABLE BALL LOCK PINS

SEE PAGE 9 FOR MATERIAL SPECIFICATIONS

Knob Handle

T Handle

L Handle

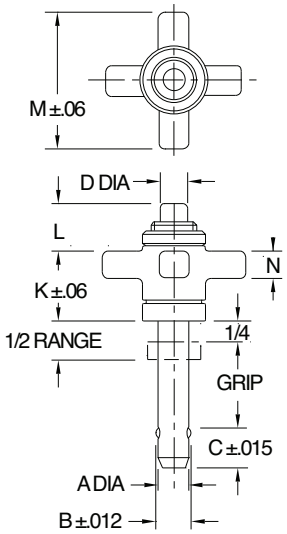

ABPK

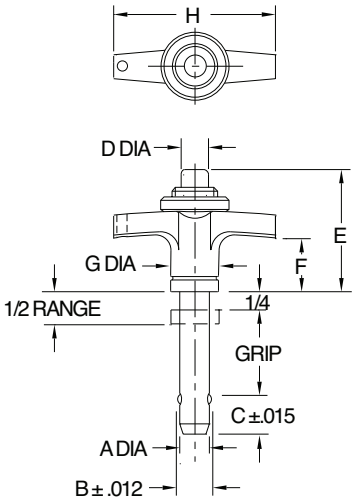

ABPT

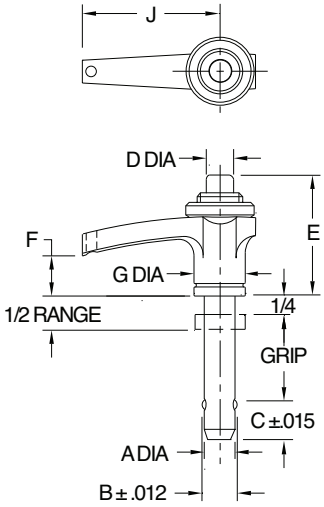

ABPL

USA

PART NO.	A DIA NOMINAL	A DIA ACTUAL	B	C	D DIA	E	F	G DIA	H	J	K	L	M	N
CL-4-ABPx-x.xx	1/4	.2485/.2470	.290	.275	.22	1.51	1.06	.75	2.25	1.87	.88	.58	1.75	.38
CL-5-ABPx-x.xx	5/16	.3110/.3095	.375	.315		1.45								
CL-6-ABPx-x.xx	3/8	.3735/.3720	.438	.350	.27	1.48	1.06	.93	3.00	2.50	.88	.63	2.12	.44
CL-7-ABPx-x.xx	7/16	.4360/.4345	.508	.365										
CL-8-ABPx-x.xx	1/2	.4985/.4970	.592	.445	.39	1.55	1.06	.93	3.00	2.50	1.00	.55	2.12	.44
CL-9-ABPx-x.xx	9/16	.5610/.5595	.666	.495										
CL-10-ABPx-x.xx	5/8	.6235/.6220	.750	.565	.50	2.07	1.25	1.31	3.50	2.87	1.25	1.13	2.75	.50
CL-12-ABPx-x.xx	3/4	.7485/.7470	.886	.655										
CL-14-ABPx-x.xx	7/8	.8735/.8720	1.044	.745	.71	2.34	1.62	1.50	4.30	4.00	1.62	1.00	4.00	.75
CL-16-ABPx-x.xx	1	.9985/.9970	1.217	.875										

METRIC

CLM-6-ABPx-xx	6mm	.2346/.2331	.278	.275	.22	1.51	1.06	.75	2.25	1.87	.88	.65	1.75	.38
CLM-8-ABPx-xx	8mm	.3134/.3118	.371	.315		1.45						.75		
CLM-10-ABPx-xx	10mm	.3921/.3906	.469	.350	.27	1.48	1.06	.93	3.00	2.50	.88	.72	2.12	.44
CLM-12-ABPx-xx	12mm	.4709/.4693	.567	.445							1.00	.73	2.12.	.44
CLM-16-ABPx-xx	16mm	.6283/.6268	.748	.565	.50	2.07	1.25	1.31	3.50	2.87	1.25	1.13	2.75	.50
CLM-20-ABPx-xx	20mm	.7858/.7843	.948	.795							2.00	1.00		

Carr Lane®
MANUFACTURING CO.
4200 Carr Lane Ct., P.O. Box 191970
St. Louis, Missouri 63119-7970 USA
Phone: 314-647-6200, FAX: 314-647-5736
Web Site: www.carrlane.com

(Rev. 2-06)

ADJUSTABLE BALL LOCK PINS

SEE PAGE 9 FOR MATERIAL SPECIFICATIONS

NEW DESIGN FOR GREATER CLAMPING STRENGTH!

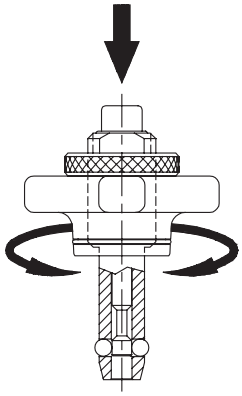

Adjustable Ball Lock Pins can be used for clamping, or simply to provide a variable grip length.

These Ball Lock Pins have an adjustable grip length. They can be used for clamping, or simply to provide a variable grip length. The threaded handle turns to provide a +/- 1/4" clamping range or adjustment range. When used just for variable grip length (not for clamping), the handle can be secured with the supplied knurled locknut. These single-acting pins are manufactured with four balls as standard, instead of two, for more-distributed ball-pullout force in clamping applications. Available in steel or stainless steel.

Choice of three handle styles: Knob, T, and L. Standard shank diameters from 1/4 to 1" (6 to 20mm in metric), each in a choice of many standard grip lengths. Available from stock only in the standard grip lengths listed below. Other grip lengths are available as specials (extra charge and longer delivery time).

Pins are optionally available in stainless steel instead of alloy steel, for greater corrosion resistance. Note: both steel and stainless pins have aluminum handles and buttons. Add "-S" to the part number:

CL-4-ABPK-1.50 (steel)
CL-4-ABPK-1.50-S (stainless)

To order pins with a standard cable assembly attached (#2 cable size, 12" long, with a terminal at the free end for a #10 or M5 attachment screw), add "-C" to the part number:

CL-4-ABPK-1.50-S-C

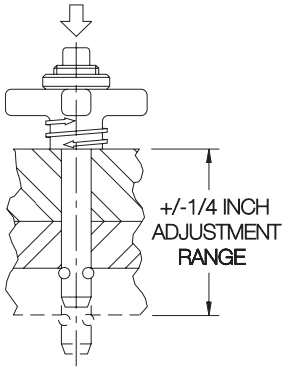

Grip length adjusts +/- 1/4" from nominal.

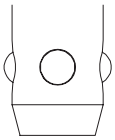

Four balls are standard on Adjustable Ball Lock Pins, to provide more distributed ball-pullout force in clamping applications.

STOCK GRIP LENGTHS (USA)

PART NO.	NOMINAL SHANK DIA	GRIP LENGTH (INCHES)															
		.50	.75	1.00	1.25	1.50	1.75	2.00	2.25	2.50	3.00	3.50	4.00	4.50	5.00	5.50	6.00
		K T L	K T L	K T L	K T L	K T L	K T L	K T L	K T L	K T L	K T L	K T L	K T L	K T L	K T L	K T L	K T L
CL-4-ABPx-x.xx	1/4	x x x	x x x	x x x	x x x	x x x	x x x	x x x		x x x	x x x	x x x	x x x	x x x	x x x		
CL-5-ABPx-x.xx	5/16	x x x	x x x	x x x		x x x		x x x		x x x	x x x		x x x				
CL-6-ABPx-x.xx	3/8	x x x	x x x	x x x	x x x	x x x	x x x	x x x		x x x	x x x	x x x	x x x		x x x		x x x
CL-7-ABPx-x.xx	7/16																
CL-8-ABPx-x.xx	1/2			x x x	x x x	x x x	x x x	x x x		x x x	x x x	x x x	x x x	x x x	x x x		x x x
CL-9-ABPx-x.xx	9/16																
CL-10-ABPx-x.xx	5/8			x x x		x x x		x x x		x x x	x x x		x x x				
CL-12-ABPx-x.xx	3/4			x x x		x x x		x x x		x x x	x x x		x x x				
CL-14-ABPx-x.xx	7/8																
CL-16-ABPx-x.xx	1							x x x		x x x	x x x		x x x				x x x

STOCK GRIP LENGTHS (METRIC)

PART NO.	NOMINAL SHANK DIA	GRIP LENGTH (mm)											
		10	15	20	25	30	40	50	60	70	80	90	100
		K T L	K T L	K T L	K T L	K T L	K T L	K T L	K T L	K T L	K T L	K T L	K T L
CLM-6-ABPx-xx	6mm			x x x		x x x	x x x	x x x					
CLM-8-ABPx-xx	8mm			x x x		x x x	x x x	x x x					
CLM-10-ABPx-xx	10mm					x x x	x x x	x x x					
CLM-12-ABPx-xx	12mm												
CLM-16-ABPx-xx	16mm												
CLM-20-ABPx-xx	20mm												

X = STOCKED IN ALLOY AND STAINLESS STEEL

Carr Lane®
MANUFACTURING CO.
4200 Carr Lane Ct., P.O. Box 191970
St. Louis, Missouri 63119-7970 USA
Phone: 314-647-6200, FAX: 314-647-5736
Web Site: www.carrlane.com

(Rev. 9-07)

DOUBLE-ACTING BALL LOCK PINS

SEE PAGE 9 FOR MATERIAL SPECIFICATIONS

Ring Handle

T Handle

L Handle

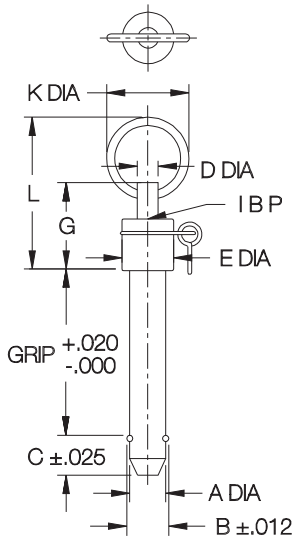

BPDR

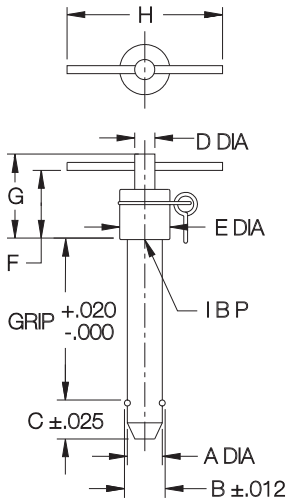

BPDT

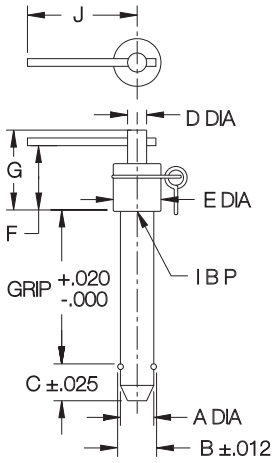

BPDL

USA

PART NO.	A DIA NOMINAL	A DIA ACTUAL	B	C	D DIA	E DIA	F	G	H	J	K DIA	L	M
CL-3-BPDx-x.xx	3/16 (#10)	.1885/.1870	.219	.385	.19	7/16	.86	1.02	1-1/2	1-1/4	1	1.86	.12
CL-4-BPDx-x.xx	1/4	.2485/.2470	.290										.12
CL-5-BPDx-x.xx	5/16	.3110/.3095	.375	.415	.25	1/2							.14
CL-6-BPDx-x.xx	3/8	.3735/.3720	.438	.485		5/8	.86	1.06	1-15/16	1-7/16			.15
CL-7-BPDx-x.xx	7/16	.4360/.4345	.508										.16
CL-8-BPDx-x.xx	1/2	.4985/.4970	.592	.565	.31	11/16	.97	1.24	2-3/16	1-19/32		1.97	.18
CL-9-BPDx-x.xx	9/16	.5610/.5595	.666	.635									.18
CL-10-BPDx-x.xx	5/8	.6235/.6220	.750	.725	.43	13/16	1.14	1.44	2-7/16	1-3/4	1-5/16	2.45	.26
CL-12-BPDx-x.xx	3/4	.7485/.7470	.886	.765		15/16	1.13	1.43				2.44	.29
CL-14-BPDx-x.xx	7/8	.8735/.8720	1.044	.925	.56	1-1/8	1.29	1.59	2-25/32	2-3/16		2.62	.28
CL-16-BPDx-x.xx	1	.9985/.9970	1.217	1.075		1-1/4	1.47	1.77				2.79	.30

METRIC

CLM-5-BPDx-xx	5mm	.1954/.1939	.212	.385	.19	7/16	.86	1.02	1-1/2	1-1/4	1	1.86	.12
CLM-6-BPDx-xx	6mm	.2347/.2332	.278										.12
CLM-8-BPDx-xx	8mm	.3135/.3120	.371	.415	.25	1/2							.14
CLM-10-BPDx-xx	10mm	.3922/.3907	.469	.485		5/8	.86	1.06	1-15/16	1-7/16			.15
CLM-12-BPDx-xx	12mm	.4709/.4694	.567	.565	.31	11/16	.97	1.24	2-3/16	1-19/32		1.97	.18
CLM-16-BPDx-xx	16mm	.6284/.6269	.748	.725	.43	13/16	1.14	1.44	2-7/16	1-3/4	1-5/16	2.45	.26
CLM-20-BPDx-xx	20mm	.7859/.7844	.948	.925	.56	1-1/8	1.29	1.59	2-25/32	2-3/16		2.62	.28

Carr Lane®
MANUFACTURING CO.
4200 Carr Lane Ct., P.O. Box 191970
St. Louis, Missouri 63119-7970 USA
Phone: 314-647-6200, FAX: 314-647-5736
Web Site: www.carrlane.com

(Rev. 7-02)

DOUBLE-ACTING BALL LOCK PINS

SEE PAGE 9 FOR MATERIAL SPECIFICATIONS

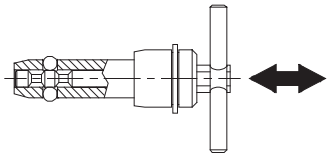

Similar to a single-acting pin, except the center spindle has *two* grooves instead of one, to release the ball by either pushing or pulling. Pushing on the handle releases the balls and inserts the pin in one motion. Pulling on the handle releases the balls and removes the pin in one motion. Available in steel or stainless steel. Choice of three handle styles: T, L, and Ring. Standard shank diameters from 3/16 to 1" (5 to 20mm in metric). Any grip length up to 6" (150mm in metric) is available as a standard, at no extra charge. Available from stock in some standard grip lengths, or quickly made to order in custom lengths and diameters.

Ordering Example (USA):

CL — 5 — BPDT — 2.50 — S — D — 4BALL — C

- Diameter (16ths of an inch)
- Handle type (R, T, L)
- Grip length (inches)
- Add -S for stainless steel (steel is standard)
- Add -D for drive-out option
- Add for 4 balls (2 are standard)
- Add -C for attached cable assembly

Ordering Example (Metric):

CLM — 8 — BPDT — 50 — S — D — 4BALL — C

- Add M for metric
- Diameter (mm)
- Handle type (R, T, L)
- Grip length (mm)
- Add -S for stainless steel (steel is standard)
- Add -D for drive-out option
- Add for 4 balls (2 are standard)
- Add -C for attached cable assembly

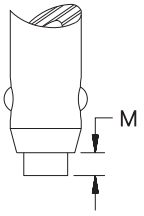

Drive-Out Option

Double-acting Ball Lock Pins are available with a “drive-out” option, where the center spindle extends slightly beyond the shank end (see M dimension). This allows removing a pin under slight shear load by tapping the shank end with a hammer (releasing the balls at the same time).

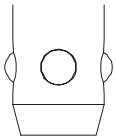

Other Options

Ball Lock Pins are optionally available in stainless steel instead of alloy steel for greater corrosion resistance. Pins are also available with four balls instead of two, as specials, for additional pull-out strength and more distributed ball-contact force. Optional cable assemblies are 12" long, with a terminal at the free end for a #10-32 or M5 attachment screw (CL-82-KA-12.0).

STOCK GRIP LENGTHS (USA)
ALLOY STEEL

PART NO.	NOMINAL SHANK DIA	GRIP LENGTH (INCHES)									
		1.00	1.25	1.50	1.75	2.00	2.50	3.00	3.50	4.00	5.00
		R T L	R T L	R T L	R T L	R T L	R T L	R T L	R T L	R T L	R T L
CL-3-BPDx-x.xx	3/16 (#10)	● ●		● ●							
CL-4-BPDx-x.xx	1/4	● ●	●	● ●		● ●	●				
CL-5-BPDx-x.xx	5/16										
CL-6-BPDx-x.xx	3/8	● ●		● ●		● ●	● ●	●			
CL-7-BPDx-x.xx	7/16										
CL-8-BPDx-x.xx	1/2	●		● ● ●	●	● ●	● ●	● ●	● ●	●	●
CL-9-BPDx-x.xx	9/16										
CL-10-BPDx-x.xx	5/8										
CL-12-BPDx-x.xx	3/4										
CL-14-BPDx-x.xx	7/8										
CL-16-BPDx-x.xx	1										

Carr Lane MANUFACTURING CO.®
4200 Carr Lane Ct., P.O. Box 191970
St. Louis, Missouri 63119-7970 USA
Phone: 314-647-6200, FAX: 314-647-5736
Web Site: www.carrlane.com

(Rev. 5-99)

LIFTING PINS

ALLOY STEEL-MATERIAL SPECIFICATIONS ON PAGE 9
FORGED STEEL SHACKLE PER AN116

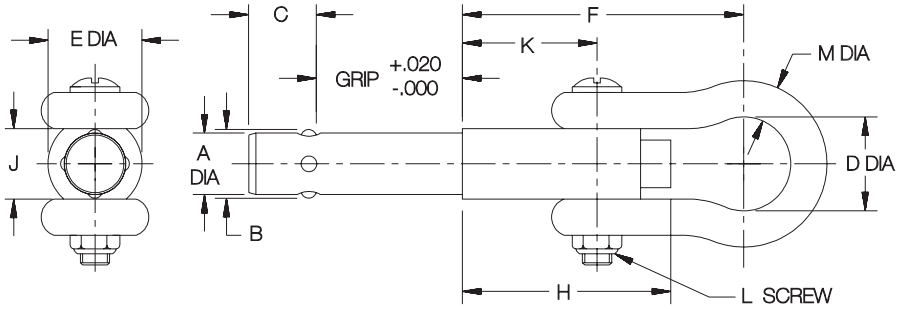

A single-acting ball lock pin with a solid, one-piece body and four balls for high tension loads. Sturdy forged shackle for heavy lifting. Shank diameters from 1/4 to 1" are available, in several standard lengths. See safety precautions on page 34.

Ordering Example:

CL-6-LFP-1.50

- 1.50 — GRIP LENGTH (inches)
- 6 — PIN DIAMETER (16ths of an inch)

PART NO.	NOM. DIA	A DIA MIN	A DIA MAX	B	C MAX	D DIA	E DIA	F	H	J	K	L	M DIA	STOCK GRIP LENGTHS .25	.50	1.00	1.50	2.00	3.00
CL-4-LFP-x.xx	1/4	.2470	.2485	.287	.333	9/16	9/16	1.982	1.500	1/2	7/8	#10	3/16	●	●	●	●	●	
CL-6-LFP-x.xx	3/8	.3720	.3735	.438	.425	11/16	3/4	2.257	1.600	9/16	15/16	#10	1/4	●	●	●	●	●	●
CL-8-LFP-x.xx	1/2	.4970	.4985	.593	.519	13/16	13/16	2.431	1.800	11/16	1	1/4	5/16		●	●	●	●	●
CL-12-LFP-x.xx	3/4	.7470	.7485	.887	.707	15/16	1-1/8	2.791	2.200	7/8	1-1/4	5/16	7/16		●	●		●	●
CL-16-LFP-x.xx	1	.9970	.9985	1.217	.957	1-1/4	1-3/8	3.426	2.750	1-1/8	1-1/2	3/8	1/2		●	●		●	

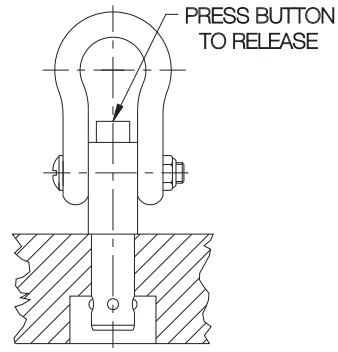

TYPICAL INSTALLATION

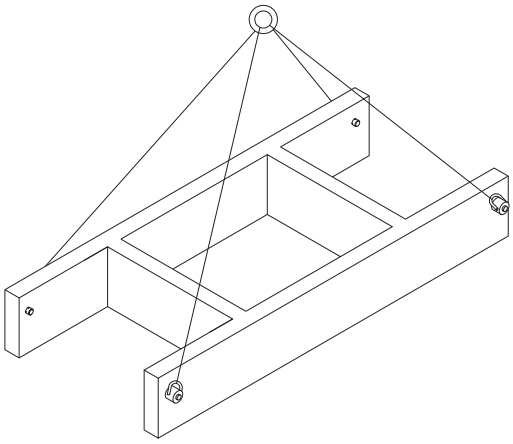

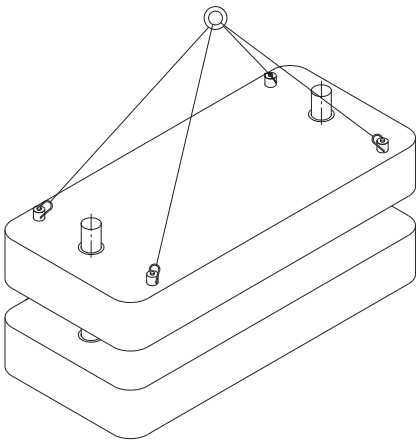

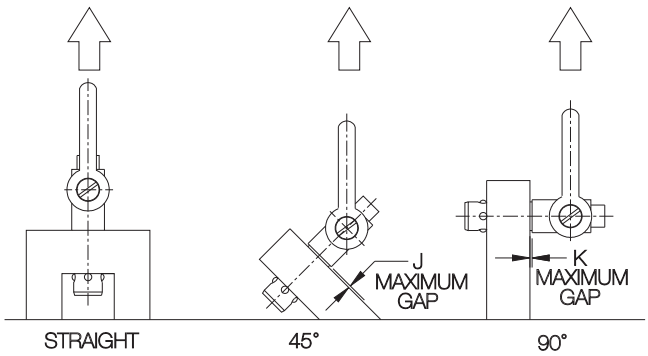

TECHNICAL DATA

PART NO.	LOAD CAPACITY (LBS)* STRAIGHT	45°	90°	J (45°)	K (90°)	RECOMMENDED HOLE DIA MAX	MIN
CL-4-LFP-x.xx	240	190	140	.031	.037	.254	.250
CL-6-LFP-x.xx	590	600	400	.036	.042	.379	.375
CL-8-LFP-x.xx	1100	1000	880			.505	.500
CL-12-LFP-x.xx	2600	2600	2300	.041	.047	.757	.750
CL-16-LFP-x.xx	3400	3200	2900	.046	.052	1.010	1.000

* 5:1 Safety factor, based on the average failing load of test specimens. See above for allowable installation-hole tolerances. Straight pull capacity assumes pin is installed in a hardened tool steel plate or bushing. Use standard lifting hook so that button is not depressed while lifting.

CarrLane®
MANUFACTURING CO.
4200 Carr Lane Ct., P.O. Box 191970
St. Louis, Missouri 63119-7970 USA
Phone: 314-647-6200, FAX: 314-647-5736
Web Site: www.carrlane.com

(Rev. 12-08)

BALL LOCK RECEIVER CAPS

300-SERIES STAINLESS STEEL, PASSIVATED

NEW!

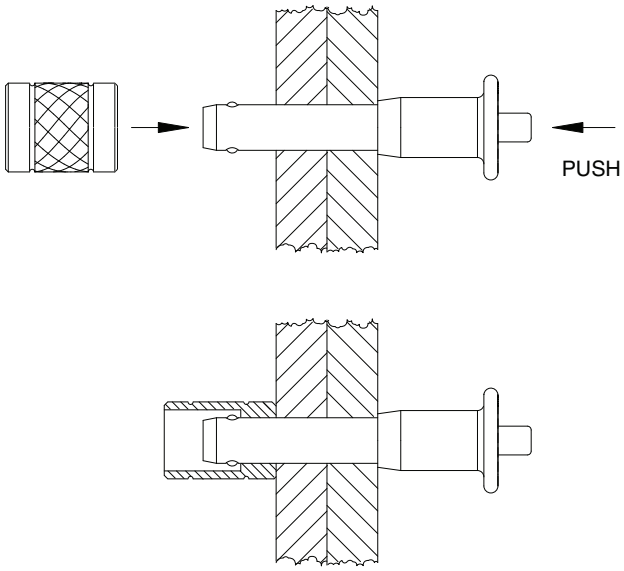

Receiver Caps are ideal for securing Ball Lock Pins used in clevis applications, especially when the through-hole has excess clearance. The Receiver Cap's inside diameter fits the Ball Lock Pin exactly, and is stepped to provide a perfect locking surface for the balls. Available to fit Ball Lock Pin diameters from 1/4 to 1/2". Made of 300-series stainless steel. Please note, using a Receiver Cap reduces the Ball Lock Pin's effective grip length slightly (see D dimension).

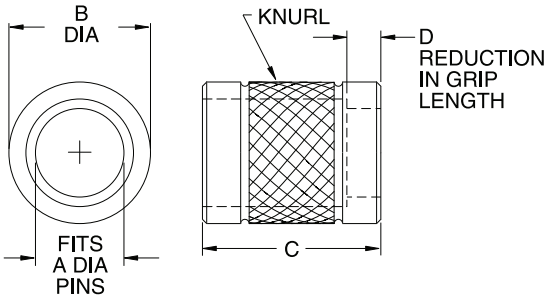

USA

PART NO.	A DIA	B DIA	C	D
CL-4-BLCR-S	1/4	3/8	.58	1/8
CL-5-BLCR-S	5/16	1/2	.63	
CL-6-BLCR-S	3/8	17/32	.73	3/16
CL-8-BLCR-S	1/2	3/4	1.00	1/4

Carr Lane®
MANUFACTURING CO.
4200 Carr Lane Ct., P.O. Box 191970
St. Louis, Missouri 63119-7970 USA
Phone: 314-647-6200, FAX: 314-647-5736
Web Site: www.carrlane.com

(Rev. 9-08)

BALL LOCK MOUNTING SYSTEM™

CLAMP BODY: 4340 STEEL, HEAT TREATED RC 40-45, BLACK OXIDE FINISH
RECEIVER BUSHINGS: 4340 STEEL, HEAT TREATED RC 50-54, BLACK OXIDE FINISH
LINERS: 52100 OR TOOL STEEL, HEAT TREATED RC 58-64, BLACK OXIDE FINISH

Ball Lock Clamp

The Ball Lock Mounting System allows accurately locating and clamping at the same time, with just the turn of a hex wrench. Ideal for mounting quick-change tooling on a subplate. Each mount consists of three components: (1) a Ball Lock Clamp with a precisely ground shank; (2) a Liner Bushing in the top plate; (3) a Receiver Bushing in the subplate. This compact assembly provides considerable holddown force, together with an incredible ±.0005 inches repeatability!

Each top plate should have one Ball Lock Mount designated as its primary reference point, and one as its secondary reference point. These two mounts should be as far apart as possible. The secondary reference point should have a relieved liner to avoid redundant location (binding). Additional Ball Lock Mounts can be used for more clamping force, but these should be installed in clearance holes, not locating liners. Note that the same Ball Lock Clamp fits any type of liner or a clearance hole.

Ball Lock Clamps must be used with one of the Receiver Bushings on page 20. Plate thickness must be ±.005 inches to achieve proper clamping force. Special grip lengths for other plate thicknesses are available as specials. Do not exceed maximum screw torque shown.

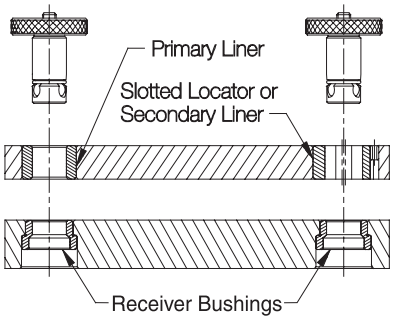

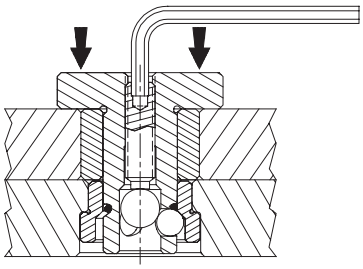

Turning the clamping screw with a hex wrench advances the large center ball, pushing the three clamping balls outward. These balls engage the angled ID of the Receiver Bushing, pulling the entire unit firmly downward.

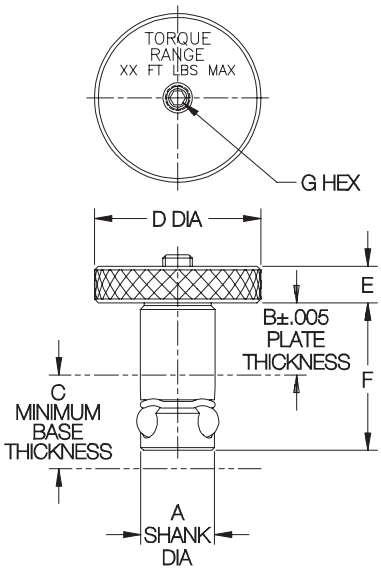

BALL LOCK CLAMPS (USA)

PART NO.	A SHANK DIA NOMINAL	A SHANK DIA ACTUAL	B NOMINAL	B ACTUAL	C	D DIA	E	F	G	MAX SCREW TORQUE (FT-LBS)	MAX HOLDOWN FORCE (LBS)	SPARE PARTS KIT PART NO.*
CL-13-BLS-0.50	13mm	.5116	1/2	.500	.75	7/8	1/4	1.08	3/32	1	750	CL-13-BLK-0.50
CL-13-BLS-0.75		.5111	3/4	.750				1.33				CL-13-BLK-0.75
CL-16-BLS-0.50	16mm	.6297	1/2	.500	.75	1-1/2	5/16	1.15	1/8	2	1200	CL-16-BLK-0.50
CL-16-BLS-0.75		.6292	3/4	.750				1.40				CL-16-BLK-0.75
CL-20-BLS-0.75	20mm	.7872	3/4	.750	.83	1-3/4	3/8	1.53	1/8	3	3000	CL-20-BLK-0.75
CL-20-BLS-1.00		.7867	1	1.000				1.78				CL-20-BLK-1.00
CL-25-BLS-0.75	25mm	.9841	3/4	.750	1.00	2	3/8	1.70	5/32	7	7000	CL-25-BLK-0.75
CL-25-BLS-1.00		.9836	1	1.000				1.95				CL-25-BLK-1.00
CL-30-BLS-0.75	30mm	1.1809	3/4	.750	1.23	2-1/4	1/2	1.88	3/16	12	10000	CL-30-BLK-0.75
CL-30-BLS-1.00		1.1804	1	1.000				2.13				CL-30-BLK-1.00
CL-35-BLS-0.75	35mm	1.3778	3/4	.750	1.28	2-1/4	1/2	1.97	1/4	19	15500	CL-35-BLK-0.75
CL-35-BLS-1.00			1	1.000				2.22				CL-35-BLK-1.00
CL-35-BLS-1.50		1.3773	1-1/2	1.250				2.72				CL-35-BLK-1.50
CL-35-BLS-2.00			2	2.000				3.22				CL-35-BLK-2.00
CL-50-BLS-1.00	50mm	1.9683	1	1.000	1.80	3	3/4	2.70	3/8	38	20000	CL-50-BLK-1.00
CL-50-BLS-1.50		1.9678	1-1/2	1.500				3.20				CL-50-BLK-1.50
CL-50-BLS-2.00			2	2.000				3.70				CL-50-BLK-2.00

BALL LOCK CLAMPS (METRIC)

CLM-13-BLS-13	13mm	.5116	13mm	.512	.75	.87	.236	1.09	2.5mm	1	750	CLM-13-BLK-13
CLM-13-BLS-20		.5111	20mm	.787				1.36				CLM-13-BLK-20
CLM-16-BLS-20	16mm	.6297	20mm	.787	.75	1.50	.315	1.44	3mm	2	1200	CLM-16-BLK-20
CLM-16-BLS-25		.6292	25mm	.984				1.63				CLM-16-BLK-25
CLM-20-BLS-20	20mm	.7872	20mm	.787	.83	1.77	.394	1.56	3mm	3	3000	CLM-20-BLK-20
CLM-20-BLS-25		.7867	25mm	.984				1.75				CLM-20-BLK-25
CLM-25-BLS-20	25mm	.9841	20mm	.787	1.00	1.97	.394	1.73	4mm	7	7000	CLM-25-BLK-20
CLM-25-BLS-25		.9836	25mm	.984				1.93				CLM-25-BLK-25

* Spare Parts Kit includes screw, center ball, locking balls, and O-ring.

Carr Lane® MANUFACTURING CO.
4200 Carr Lane Ct., P.O. Box 191970
St. Louis, Missouri 63119-7970 USA
Phone: 314-647-6200, FAX: 314-647-5736
Web Site: www.carrlane.com

(Rev. 9-07)

BALL LOCK MOUNTING SYSTEM™

Primary Liner Bushing

Secondary Liner Bushing

Slotted Locator Bushing

LINER BUSHINGS

Each top plate should have one Primary Liner, and one Secondary Liner or Slotted Locator Bushing. Primary Liners have a tight ID (+.0002/+.0007 tolerance) for precise reference in two axes. Secondary Liners have slight ID clearance (+.0010/+.0020 tolerance) to avoid binding. Slotted Locator Bushings provide better accuracy than Secondary Liners, but take a few extra steps to install (see page 5 for instructions and additional dimensions). Slotted Locators have a tight ID tolerance in one direction and full relief in the perpendicular direction (available only in 16mm, 20mm, and 25mm diameters). Note: alternatively, two Primary Liners can be used for alignment if hole locations are held to ±.0002 inches.

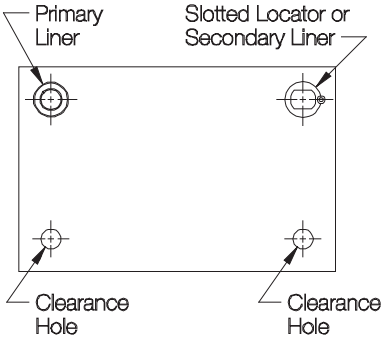

To mount top plates with more than two Ball Lock Clamps, use clearance holes .015-.030" over nominal size for the additional holes, instead of liner bushings, to avoid redundant location. (Still use four Receiver Bushings in the subplate.)

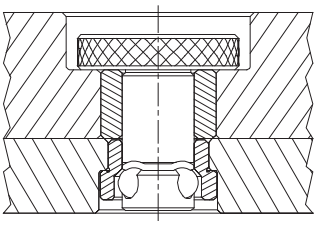

Extra-thick top plates can be counter-bored to achieve proper clamping thickness (hold thickness to ±.005). Special-length Ball Lock Clamps are also available, as specials.

PRIMARY LINER BUSHINGS (USA)

PART NO.	ID	LENGTH	OD	HOLE IN PLATE
CL-13-BLL-0.50	13mm	.50	.7518	.7504
CL-13-BLL-0.75		.75	.7514	.7509
CL-16-BLL-0.50	16mm	.50	1.0018	1.0004
CL-16-BLL-0.75		.75	1.0014	1.0009
CL-20-BLL-0.75	20mm	.75	1.3772	1.3758
CL-20-BLL-1.00		1.00	1.3768	1.3763
CL-25-BLL-0.75	25mm	.75	1.3772	1.3758
CL-25-BLL-1.00		1.00	1.3768	1.3763
CL-30-BLL-0.75	30mm	.75	1.7523	1.7509
CL-30-BLL-1.00		1.00	1.7519	1.7514
CL-35-BLL-0.75	35mm	.75	1.7523	1.7509
CL-35-BLL-1.00		1.00	1.7519	1.7514
CL-35-BLL-1.50		1.50		
CL-35-BLL-2.00		2.00		
CL-50-BLL-1.00	50mm	1.00	2.5025	2.5007
CL-50-BLL-1.50		1.50	2.5021	2.5012
CL-50-BLL-2.00		2.00		

(METRIC)

CLM-13-BLL-13	13mm	.512	19mm	.7487
CLM-13-BLL-20		.787		.7491
CLM-16-BLL-20	16mm	.787	25mm	.9849
CLM-16-BLL-25		.984		.9853
CLM-20-BLL-20	20mm	.787	35mm	1.3787
CLM-20-BLL-25		.984		1.3791
CLM-25-BLL-20	25mm	.787	35mm	1.3787
CLM-25-BLL-25		.984		1.3791

SECONDARY LINER BUSHINGS (USA)

PART NO.	ID	LENGTH	OD	HOLE IN PLATE
CL-13-BLT-0.50	13mm	.50	.7518	.7504
CL-13-BLT-0.75		.75	.7514	.7509
CL-16-BLT-0.50	16mm	.50	1.0018	1.0004
CL-16-BLT-0.75		.75	1.0014	1.0009
CL-20-BLT-0.75	20mm	.75	1.3772	1.3758
CL-20-BLT-1.00		1.00	1.3768	1.3763
CL-25-BLT-0.75	25mm	.75	1.3772	1.3758
CL-25-BLT-1.00		1.00	1.3768	1.3763
CL-30-BLT-0.75	30mm	.75	1.7523	1.7509
CL-30-BLT-1.00		1.00	1.7519	1.7514
CL-35-BLT-0.75	35mm	.75	1.7523	1.7509
CL-35-BLT-1.00		1.00	1.7519	1.7514
CL-35-BLT-1.50		1.50		
CL-35-BLT-2.00		2.00		
CL-50-BLT-1.00	50mm	1.00	2.5025	2.5007
CL-50-BLT-1.50		1.50	2.5021	2.5012
CL-50-BLT-2.00		2.00		

(METRIC)

CLM-13-BLT-13	13mm	.512	19mm	.7487
CLM-13-BLT-20		.787		.7491
CLM-16-BLT-20	16mm	.787	25mm	.9849
CLM-16-BLT-25		.984		.9853
CLM-20-BLT-20	20mm	.787	35mm	1.3787
CLM-20-BLT-25		.984		1.3791
CLM-25-BLT-20	25mm	.787	35mm	1.3787
CLM-25-BLT-25		.984		1.3791

SLOTTED LOCATOR BUSHINGS (USA)

PART NO.	ID	LENGTH	OD	HOLE IN PLATE
—	13mm	—	—	—
CLM-16-SLLB	16mm	.472	1.1815	1.1806
			1.1812	1.1809
CLM-20-SLLB	20mm	.748	1.4177	1.4168
			1.4174	1.4171
CLM-25-SLLB	25mm	.748	1.5752	1.5743
			1.5749	1.5746
—	30mm	—	—	—
—	35mm	—	—	—
—	50mm	—	—	—

(METRIC)

—	13mm	—	—	—
CLM-16-SLLB	16mm	.472	30mm	1.1806
				1.1809
CLM-20-SLLB	20mm	.748	36mm	1.4168
				1.4171
CLM-25-SLLB	25mm	.748	40mm	1.5743
				1.5746

Carr Lane® MANUFACTURING CO.
4200 Carr Lane Ct., P.O. Box 191970
St. Louis, Missouri 63119-7970 USA
Phone: 314-647-6200, FAX: 314-647-5736
Web Site: www.carrlane.com

(Rev. 9-02)

BALL LOCK MOUNTING SYSTEM™

Face-Mount Receiver Bushing

Back-Mount Receiver Bushing

RECEIVER BUSHINGS

Ball Lock Clamps must be used in conjunction with one of these Receiver Bushings. Face-Mount Receiver Bushings can be bolted into a slip-fit bored hole from above, with three socket-head cap screws (furnished). Back-Mount Receiver Bushings are more compact, but take more effort to install. Back-mount bushings are installed in the subplate from below, with a slight press fit (measure actual bushing before boring hole to provide .0005 maximum press fit, to avoid I.D. distortion). With either bushing type, the installation holes must be jig bored for accurate size and location. Installed bushings will be approximately .012" below the subplate surface.

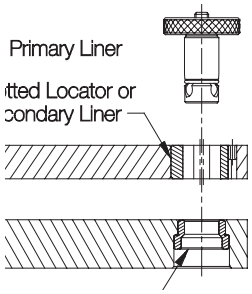

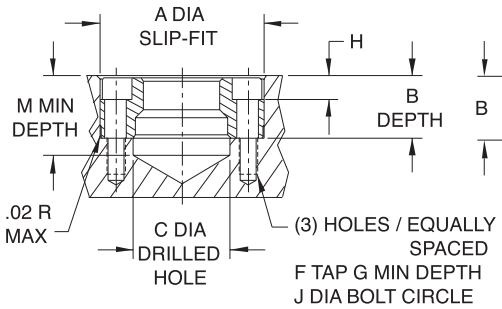

Face Mount Hole Dimensions

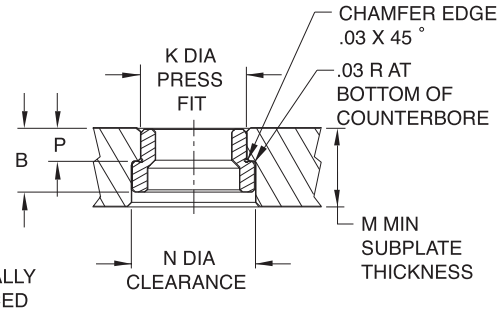

Back Mount Hole Dimensions

FACE-MOUNT RECEIVER BUSHINGS (USA)

PART NO.	ID	A DIA BUSHING	A DIA HOLE	B BUSHING	B HOLE	C	F	G	H	J DIA	M
CL-13-BLRC	13mm	1.3750 1.3746	1.3750 1.3755	.455	.469 .471	.688	#8-32	.31	.180	.984	.75
CL-16-BLRC	16mm	1.4370 1.4366	1.4370 1.4375	.455	.469 .471	.812	#8-32	.31	.193	1.125	.75
CL-20-BLRC	20mm	1.6873 1.6869	1.6873 1.6878	.623	.637 .639	.812	#10-32	.38	.273	1.362	.83
CL-25-BLRC	25mm	2.0623 2.0619	2.0623 2.0628	.785	.799 .801	1.000	1/4-28	.50	.316	1.644	1.00
CL-30-BLRC	30mm	2.2654 2.2650	2.2654 2.2659	.857	.871 .873	1.188	1/4-28	.75	.316	1.876	1.23
CL-35-BLRC	35mm	2.6873 2.6869	2.6873 2.6878	.890	.904 .906	1.562	5/16-24	.88	.375	2.178	1.28
CL-50-BLRC	50mm	3.4998 3.4994	3.4998 3.5003	1.225	1.239 1.241	2.156	3/8-24	1.00	.475	2.916	1.80

(METRIC)

CLM-13-BLRC	13mm	1.3776 1.3772	1.3780 1.3783	.455	.468 .470	.531	M4	.39	.177	.984	.78
CLM-16-BLRC	16mm	1.4563 1.4559	1.4567 1.4570	.455	.468 .470	.650	M4	.39	.177	1.142	.78
CLM-20-BLRC	20mm	1.7713 1.7709	1.7717 1.7720	.623	.637 .639	.807	M5	.47	.236	1.378	.78
CLM-25-BLRC	25mm	2.1650 2.1646	2.1654 2.1657	.785	.799 .801	1.004	M6	.59	.276	1.654	.98

BACK-MOUNT RECEIVER BUSHINGS (USA)

PART NO.	ID	B	K DIA BUSHING	K DIA HOLE	M	N DIA BUSHING	N DIA HOLE	P
CL-13-BLRV	13mm	.475	.7870 .7866	ACTUAL BUSHING K DIA −.0001 −.0005	.75	.984	.995 1.005	.277 .275
CL-16-BLRV	16mm	.475	.8760 .8756		.75	1.125	1.150 1.160	.285 .283
CL-20-BLRV	20mm	.673	1.0950 1.0946		.83	1.250	1.275 1.285	.345 .343
CL-25-BLRV	25mm	.826	1.3763 1.3759		1.00	1.562	1.588 1.598	.416 .414
CL-30-BLRV	30mm	.857	1.6264 1.6260		1.23	1.875	1.901 1.911	.432 .430
CL-35-BLRV	35mm	.990	1.8764 1.8760		1.28	2.125	2.150 2.160	.493 .491
CL-50-BLRV	50mm	1.225	2.6269 2.6265		1.80	2.937	2.963 2.973	.621 .619

(METRIC)

CLM-13-BLRV	13mm	.476	.7890 .7886	ACTUAL BUSHING K DIA −.0001 −.0005	.78	.984	1.019 1.029	.273 .271
CLM-16-BLRV	16mm	.476	.8677 .8673		.78	1.125	1.137 1.147	.286 .284
CLM-20-BLRV	20mm	.673	1.1039 1.1035		.78	1.268	1.294 1.304	.345 .343
CLM-25-BLRV	25mm	.826	1.3795 1.3791		.98	1.583	1.609 1.619	.416 .414

Carr Lane®
MANUFACTURING CO.
4200 Carr Lane Ct., P.O. Box 191970
St. Louis, Missouri 63119-7970 USA
Phone: 314-647-6200, FAX: 314-647-5736
Web Site: www.carrlane.com

(Rev. 7-02)

DETENT PINS

SEE PAGE 9 FOR MATERIAL SPECIFICATIONS

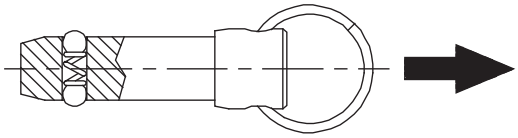

Solid alignment pin with spring-loaded locking balls (not positive locking like a ball lock pin). Simply push pin to insert, and pull to remove. Available in steel or stainless steel. Standard shank diameters from 3/16 to 1" (6 to 20mm in metric). Note: 3/16-diameter pins have one ball, instead of two, due to their small size. Any grip length up to 6" (150mm in metric) is available as a standard, at no extra charge. Available from stock in many standard grip lengths, or quickly made to order in custom lengths and diameters.

Optional Cable

Optional cable assemblies are 12" long, with a terminal at the free end for a #10-32 or M5 attachment screw. (CL-82-KA-12.0).

Ordering Example (USA):

CL - 4 - DEP - 1.50 - S - C

- Diameter (16ths of an inch)
- Grip length (inches)
- Add -S for stainless steel (steel is standard)
- Add -C for attached cable assembly

Ordering Example (Metric):

CLM - 6 - DEP - 50 - S - C

- Add M for metric
- Diameter (mm)
- Grip length (mm)
- Add -S for stainless steel (steel is standard)
- Add -C for attached cable assembly

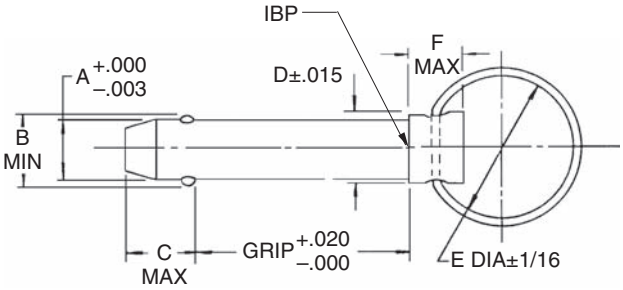

• = STOCKED IN ALLOY STEEL ONLY
X = STOCKED IN ALLOY AND STAINLESS STEEL

USA

PART NO.	A DIA NOMINAL	A DIA ACTUAL	B	C	D DIA	E DIA	F	STOCK GRIP LENGTHS, ALLOY STEEL (INCHES) .50	.75	1.00	1.25	1.50	1.75	2.00	2.25	2.50	2.75	3.00	3.25	3.50	3.75	4.00	4.50	5.00	6.00
CL-3-DEP-x.xx	3/16 (#10)	.1880	.217	.250	.375	1.00	.562	•	x	x	x	x	•	•											
CL-4-DEP-x.xx	1/4	.2480	.280	.344				x	x	x	x	x	x	x	x	x	•	x		•		x	•	•	•
CL-5-DEP-x.xx	5/16	.3105	.360	.359	.438			•	•	•	•	x	•	x	•	x	•	•		•		•			•
CL-6-DEP-x.xx	3/8	.3730	.430	.390	.500			•	x	x	x	x	•	x	•	•	•	x	•	•	•	•	•	•	•
CL-7-DEP-x.xx	7/16	.4355	.495	.469	.563					•		•		•		•		•		•		•			
CL-8-DEP-x.xx	1/2	.4980	.570	.516	.625			•	•	x	•	x	x	x	•	x	x	•	•	x	•	x	•	•	•
CL-9-DEP-x.xx	9/16	.5605	.645	.593	.688	1.50																			
CL-10-DEP-x.xx	5/8	.6230	.720	.672	.750					•	•	•	•	•	•	•	•	•				•		•	•
CL-12-DEP-x.xx	3/4	.7480	.860	.750	.875					•	•	•	•	•	•	•	•	•		•	•	•	•		•
CL-14-DEP-x.xx	7/8	.8730	1.03	.859	1.000	2.00																			
CL-16-DEP-x.xx	1	.9980	1.16	.984	1.125									•		•		•				•	•	•	•

METRIC

PART NO.	A DIA NOMINAL	A DIA ACTUAL	B	C	D DIA	E DIA	F	STOCK GRIP LENGTHS, ALLOY STEEL (MM) 10	15	20	25	30	40	50	60	70	80	90	100
CLM-6-DEP-xx	6mm	.2342	.266	.344	.375	1.00	.562	•	•	•	•	•	•	•					•
CLM-8-DEP-xx	8mm	.3130	.363	.359	.438					•	•	•	•	•					•
CLM-10-DEP-xx	10mm	.3917	.451	.390	.500				•	•	•	•	•	•					•
CLM-12-DEP-xx	12mm	.4704	.540	.516	.563							•	•	•					•
CLM-16-DEP-xx	16mm	.6279	.725	.672	.750	1.50								•					•
CLM-20-DEP-xx	20mm	.7854	.897	.750	1.000	2.00													

Carr Lane MANUFACTURING CO.
4200 Carr Lane Ct., P.O. Box 191970
St. Louis, Missouri 63119-7970 USA
Phone: 314-647-6200, FAX: 314-647-5736
Web Site: www.carrlane.com

(3-07)

MARINE DETENT PINS

SHANK: 316 STAINLESS STEEL
RING: 316 OR 300-SERIES STAINLESS STEEL
SPRING & BALLS: 316 STAINLESS STEEL

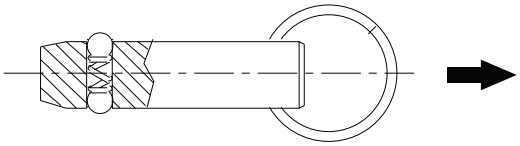

Marine Detent pins are made of 316 stainless steel for extra corrosion resistance. Economical shear pin, without a head for applications where exact grip length is not important. Solid alignment pins with spring-loaded locking balls (not positive locking like a ball lock pin). Simply push pin to insert, and pull to remove. Shank diameters from 3/16" to 1/2", each available in a choice of several standard grip lengths. Note: 3/16-diameter pins have one ball, instead of two, due to their small size. Available from stock only in the standard grip lengths listed below (other grip lengths available as specials).

Optional Cable

Optional cable assemblies are 12" long, with a terminal at the free end for a #10-32 or M5 attachment screw. (CL-82-KA-12.0).

Ordering Example (USA):

CL - 4 - MDP - 1.50 - S - C

- 4 — Diameter (16ths of an inch)
- 1.50 — Grip length (inches)
- C — Add -C for attached cable assembly

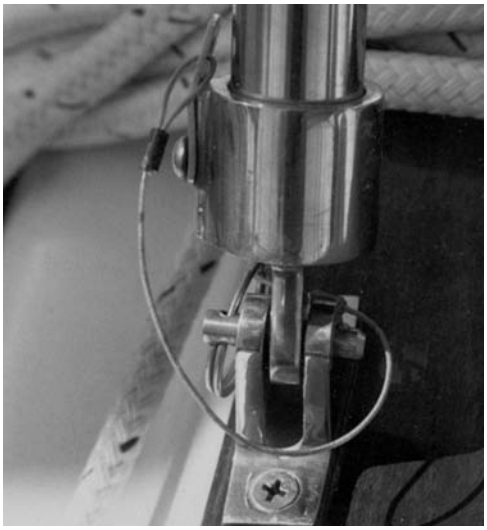

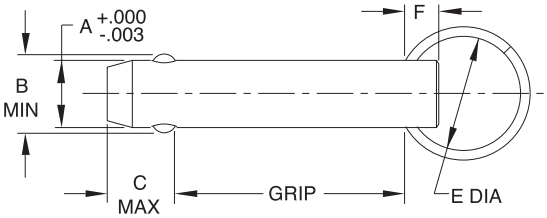

DIMENSIONS (USA)

PART NO.	A DIA NOMINAL	A DIA ACTUAL	B	C	E DIA	F DIA
CL-3-MDP-x.xx-S	3/16 (#10)	.1880	.200	.329	1.00	.25
CL-4-MDP-x.xx-S	1/4	.2480	.280	.344		
CL-5-MDP-x.xx-S	5/16	.3105	.360	.359		
CL-6-MDP-x.xx-S	3/8	.3730	.430	.390		
CL-8-MDP-x.xx-S	1/2	.4980	.570	.516		

STANDARD STOCK GRIP LENGTHS (USA)

PART NO.	NOMINAL SHANK DIA	GRIP LENGTH (INCHES) 0.50	0.75	1.00	1.25	1.50	1.75	2.00	2.25	2.50	3.00	3.50	4.00
CL-3-MDP-x.xx-S	3/16 (#10)	X	X	X	X	X	X	X		X			
CL-4-MDP-x.xx-S	1/4	X	X	X	X	X	X	X	X	X	X		
CL-5-MDP-x.xx-S	5/16		X	X	X	X	X	X		X	X	X	X
CL-6-MDP-x.xx-S	3/8		X	X	X	X	X	X	X	X	X	X	X
CL-8-MDP-x.xx-S	1/2			X	X	X	X	X		X	X	X	X

X-Stocked in stainless steel.

Carr Lane®
MANUFACTURING CO.
4200 Carr Lane Ct., P.O. Box 191970
St. Louis, Missouri 63119-7970 USA
Phone: 314-647-6200, FAX: 314-647-5736
Web Site: www.carrlane.com

(Rev. 7-06)

THREADED DETENT PINS

SHANK: 300-SERIES STAINLESS STEEL
SPRING: 17-7PH OR 302 STAINLESS STEEL
BALLS: 440C STAINLESS STEEL

NOW ALSO AVAILABLE IN METRIC!

Threaded Detent Pins are solid alignment pins with a ground shank and a threaded end for a knob handle. Two locking balls hold the pin in place by spring force. Simply push to insert, and pull to remove. The threaded end accepts virtually any type of knob handle (order separately — available in steel, stainless steel, and several different plastics). Knob handles can be permanently secured with thread-locking adhesive if desired. Threaded Detent Pins are available in stainless steel only. Standard shank diameters from 3/16 to 1/2" (6 to 10mm in metric), each in a choice of many standard grip lengths. Note: 3/16-dia pins have only one locking ball instead of two due to their small size. Available from stock only in the standard grip lengths listed (other grip lengths available as specials).

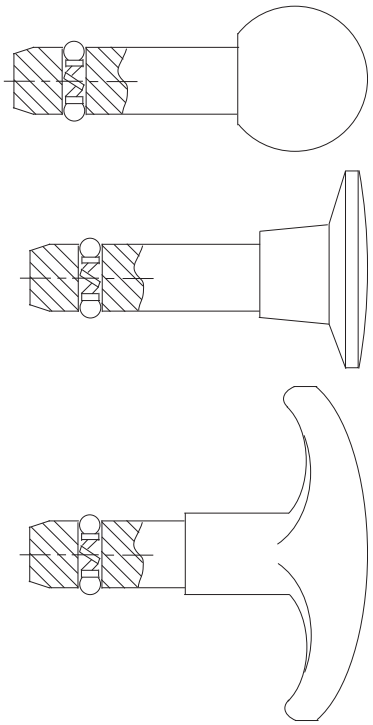

For a wide selection of knob handles to fit these Threaded Detent Pins, see pages 104-111.

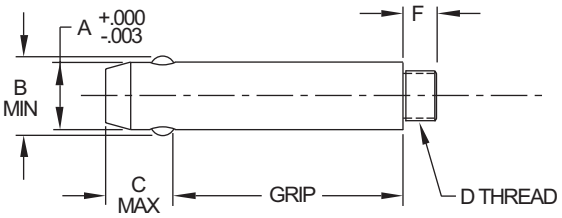

USA

PART NO.	A DIA NOMINAL	A DIA ACTUAL	GRIP LENGTH	B	C	D	F
CL-3-TDP-0.50-S	3/16(#10)	.1880	.50	.200	.250	#8-32	1/4
CL-3-TDP-0.75-S			.75				
CL-3-TDP-1.00-S			1.00				
CL-3-TDP-1.25-S			1.25				
CL-3-TDP-1.50-S			1.50				
CL-3-TDP-1.75-S			1.75				
CL-3-TDP-2.00-S			2.00				
CL-4-TDP-0.50-S	1/4	.2480	0.50	.280	.344	#10-32	1/4
CL-4-TDP-0.75-S			0.75				
CL-4-TDP-1.00-S			1.00				
CL-4-TDP-1.25-S			1.25				
CL-4-TDP-1.50-S			1.50				
CL-4-TDP-1.75-S			1.75				
CL-4-TDP-2.00-S			2.00				
CL-4-TDP-2.50-S			2.50				
CL-4-TDP-3.00-S			3.00				
CL-5-TDP-0.75-S	5/16	.3105	0.75	.360	.359	1/4-20	3/8
CL-5-TDP-1.00-S			1.00				
CL-5-TDP-1.25-S			1.25				
CL-5-TDP-1.50-S			1.50				
CL-5-TDP-1.75-S			1.75				
CL-5-TDP-2.00-S			2.00				
CL-5-TDP-2.50-S			2.50				
CL-5-TDP-3.00-S			3.00				
CL-6-TDP-0.75-S	3/8	.3730	0.75	.430	.390	1/4-20	3/8
CL-6-TDP-1.00-S			1.00				
CL-6-TDP-1.25-S			1.25				
CL-6-TDP-1.50-S			1.50				
CL-6-TDP-1.75-S			1.75				
CL-6-TDP-2.00-S			2.00				
CL-6-TDP-2.50-S			2.50				
CL-6-TDP-3.00-S			3.00				
CL-6-TDP-3.50-S			3.50				
CL-6-TDP-4.00-S			4.00				
CL-8-TDP-1.00-S	1/2	.4980	1.00	.570	.516	3/8-16	1/2
CL-8-TDP-1.50-S			1.50				
CL-8-TDP-2.00-S			2.00				
CL-8-TDP-2.50-S			2.50				
CL-8-TDP-3.00-S			3.00				
CL-8-TDP-3.50-S			3.50				
CL-8-TDP-4.00-S			4.00				

METRIC

PART NO.	A DIA NOMINAL	A DIA ACTUAL	GRIP LENGTH	B	C	D	F
CLM-6-TDP-15-S	6mm	.2342	15mm	.266	.344	M5	.24
CLM-6-TDP-20-S			20mm				
CLM-6-TDP-25-S			25mm				
CLM-6-TDP-30-S			30mm				
CLM-6-TDP-40-S			40mm				
CLM-6-TDP-50-S			50mm				
CLM-8-TDP-20-S	8mm	.3130	20mm	.363	.359	M6	.39
CLM-8-TDP-25-S			25mm				
CLM-8-TDP-30-S			30mm				
CLM-8-TDP-40-S			40mm				
CLM-8-TDP-50-S			50mm				
CLM-10-TDP-20-S	10mm	.3917	20mm	.451	.390	M8	.39
CLM-10-TDP-25-S			25mm				
CLM-10-TDP-30-S			30mm				
CLM-10-TDP-40-S			40mm				
CLM-10-TDP-50-S			50mm				

Carr Lane®
MANUFACTURING CO.
4200 Carr Lane Ct., P.O. Box 191970
St. Louis, Missouri 63119-7970 USA
Phone: 314-647-6200, FAX: 314-647-5736
Web Site: www.carrlane.com

(Rev. 4-07)

EXPANDING PINS

SPLIT BUSHINGS, MALE SEGMENTS, & SPACERS: 17-4PH STAINLESS STEEL, RC 40 MIN, PASSIVATED, DRY FILM LUBE
CENTER SPINDLE: 17-4PH STAINLESS STEEL, RC 36-40, PASSIVATED, DRY FILM LUBE
WASHER: 17-4PH STAINLESS STEEL, PASSIVATED, DRY FILM LUBE
HEX NUT: 17-4PH STAINLESS STEEL, WITH LOCKING ELEMENT

Precision alignment pin that expands up to .006 inches to tighten up hole clearance. The pin is an assembly of female split bushings separated by male segments, on a center spindle, that expands when drawn together. This assembly provides excellent shear strength, comparable to a solid pin. Diameters from 1/4 to 1" are available in several standard lengths. Pins can be installed in through holes or blind holes. Also see page 29, for cam-handle type.

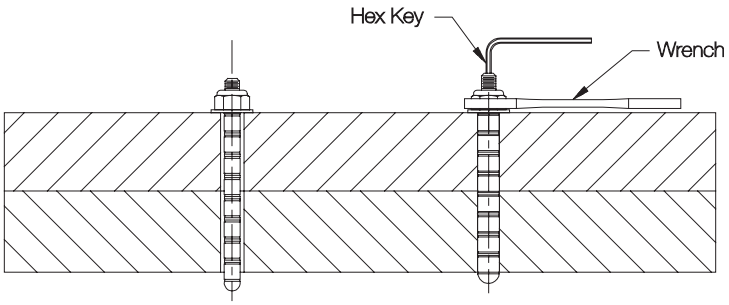

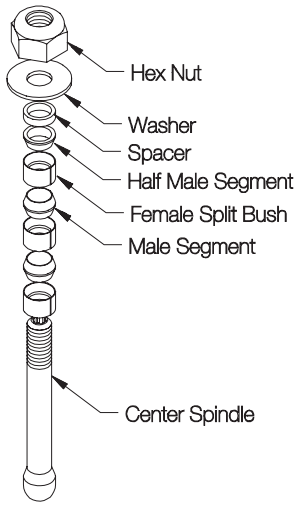

Tightening the hex nut with a wrench expands pin diameter up to .006 inches, to take up slack and secure the pin in place. Hold center spindle stationary with a hex key while tightening.

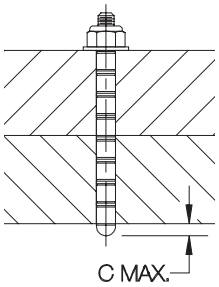

Important: Install pin so that all split bushings are contained in the installation hole.

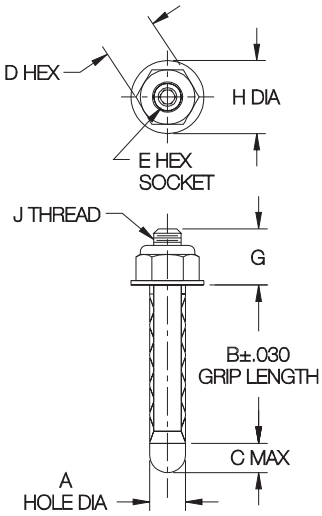

HEX HEAD

PART NO.	A DIA NOMINAL	A DIA MIN	A DIA MAX	B	C	D	E	G	H DIA	J	DOUBLE-SHEAR STRENGTH (LBS)*	INSTALLATION TORQUE (FT-LBS)
CL-4-EXPH-0.50	1/4	.250	.254	.50	1/4	3/8	3/32	.39	.67	#10-32	4,000	3
CL-4-EXPH-0.75				.75								
CL-4-EXPH-1.00				1.00								
CL-4-EXPH-1.50				1.50								
CL-4-EXPH-2.00				2.00								
CL-4-EXPH-3.00				3.00								
CL-5-EXPH-1.00	5/16	.312	.317	1.00	5/16	3/8	3/32	.40	.67	#10-32	6,300	3
CL-5-EXPH-2.00				2.00								
CL-5-EXPH-3.00				3.00								
CL-6-EXPH-0.50	3/8	.375	.380	.50	3/8	7/16	1/8	.49	.67	1/4-28	9,000	7.5
CL-6-EXPH-0.75				.75								
CL-6-EXPH-1.00				1.00								
CL-6-EXPH-1.50				1.50								
CL-6-EXPH-2.00				2.00								
CL-6-EXPH-3.00				3.00								
CL-8-EXPH-0.50	1/2	.500	.505	.50	1/2	9/16	3/16	.71	.92	3/8-24	16,100	29
CL-8-EXPH-1.00				1.00								
CL-8-EXPH-1.50				1.50								
CL-8-EXPH-2.00				2.00								
CL-8-EXPH-3.00				3.00								
CL-10-EXPH-0.50	5/8	.625	.630	.50	5/8	3/4	1/4	.90	1.22	1/2-20	25,100	83
CL-10-EXPH-1.00				1.00								
CL-10-EXPH-1.50				1.50								
CL-10-EXPH-2.00				2.00								
CL-10-EXPH-3.00				3.00								
CL-12-EXPH-1.00	3/4	.750	.757	1.00	3/4	7/8	1/4	1.02	1.35	9/16-18	36,200	121
CL-12-EXPH-2.00				2.00								
CL-12-EXPH-3.00				3.00								
CL-12-EXPH-4.00				4.00								
CL-16-EXPH-1.00	1	1.000	1.010	1.00	1	1-1/16	1/4	1.23	1.47	3/4-16	64,300	375
CL-16-EXPH-2.00				2.00								
CL-16-EXPH-3.00				3.00								
CL-16-EXPH-4.00				4.00								

* 2:1 Safety Factor

Carr Lane MANUFACTURING CO.
4200 Carr Lane Ct., P.O. Box 191970
St. Louis, Missouri 63119-7970 USA
Phone: 314-647-6200, FAX: 314-647-5736
Web Site: www.carrlane.com

(Rev. 4-07)

EXPANDING PINS

SPLIT BUSHINGS, MALE SEGMENTS, & SPACERS: 17-4PH STAINLESS STEEL, RC 40 MIN, PASSIVATED, DRY FILM LUBE
CENTER SPINDLE: 17-4PH STAINLESS STEEL, RC 36-40, PASSIVATED, DRY FILM LUBE
BARREL NUT & WASHER: 17-4PH STAINLESS STEEL, PASSIVATED, DRY FILM LUBE
HANDLE: ALUMINUM ALLOY, BLACK ANODIZED

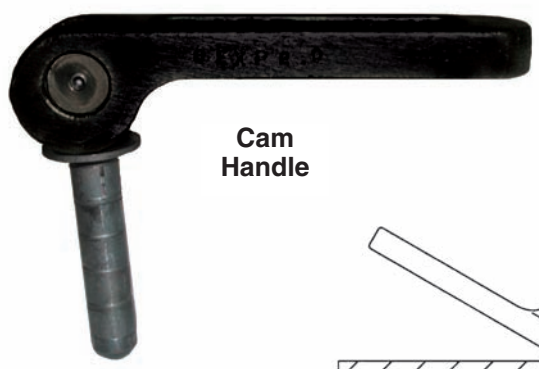

Precision alignment pin that expands up to .006 inches to tighten up hole clearance. The pin is an assembly of female split bushings separated by male segments, on a center spindle, that expands when drawn together. This assembly provides excellent shear strength, comparable to a solid pin. Diameters from 1/4 to 1" are available in several standard lengths. Pins can be installed in through holes or blind holes. Also see page 28, for hex-head type.

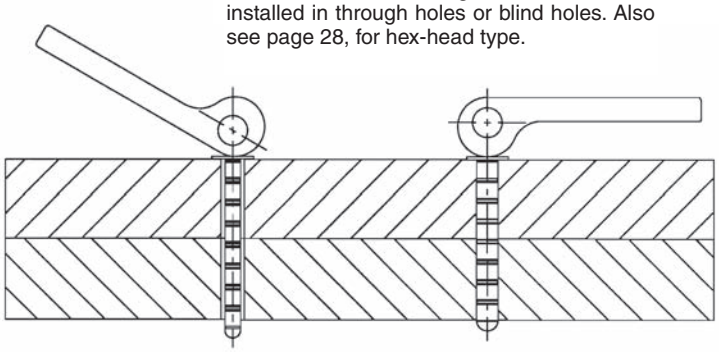

Moving the cam handle expands pin diameter up to .006 inches, to take up slack and secure the pin in place. If additional adjustment is required, remove setscrew and turn the cam handle.

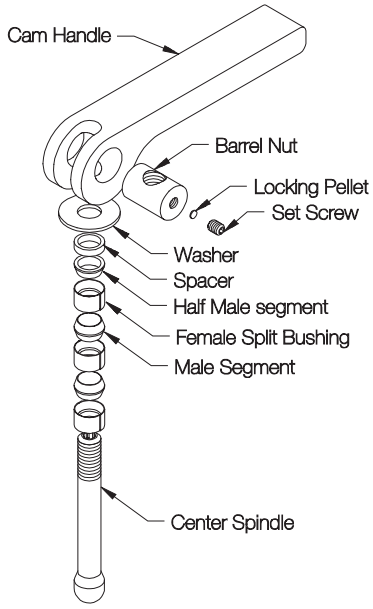

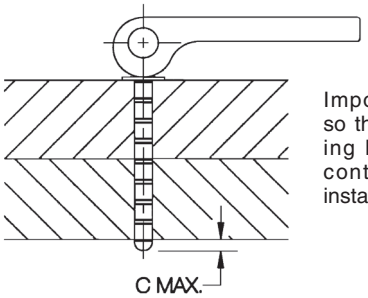

Important: Install so that all expanding bushings are contained in the installation hole.

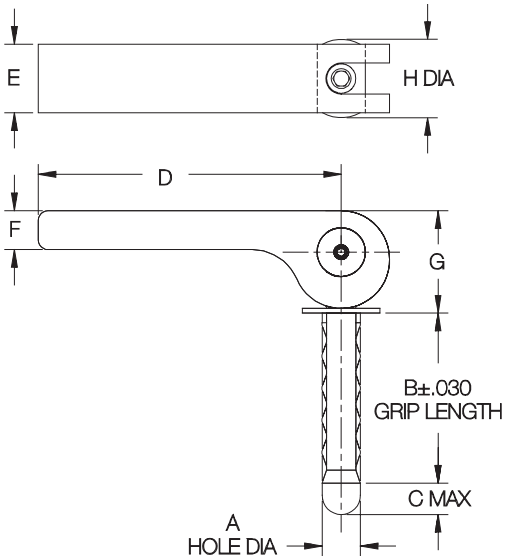

CAM HANDLE

PART NO.	A DIA NOMINAL	A DIA MIN	A DIA MAX	B	C	D	E	F	G	H DIA	DOUBLE-SHEAR STRENGTH (LBS)*
CL-4-EXP-0.50	1/4	.250	.254	.50	1/4	2-3/8	1/2	5/16	.81	5/8	4,000
CL-4-EXP-0.75				.75							
CL-4-EXP-1.00				1.00							
CL-4-EXP-1.50				1.50							
CL-4-EXP-2.00				2.00							
CL-4-EXP-3.00				3.00							
CL-5-EXP-1.00	5/16	.312	.317	1.00	5/16	2-3/8	1	1/2	1.12	1	6,300
CL-5-EXP-2.00				2.00							
CL-5-EXP-3.00				3.00							
CL-6-EXP-0.50	3/8	.375	.380	.50	3/8	4-1/2	1	1/2	1.12	1	9,000
CL-6-EXP-0.75				.75							
CL-6-EXP-1.00				1.00							
CL-6-EXP-1.50				1.50							
CL-6-EXP-2.00				2.00							
CL-6-EXP-3.00				3.00							
CL-8-EXP-0.50	1/2	.500	.505	.50	1/2	4-1/2	1	1/2	1.12	1	16,100
CL-8-EXP-1.00				1.00							
CL-8-EXP-1.50				1.50							
CL-8-EXP-2.00				2.00							
CL-8-EXP-3.00				3.00							
CL-10-EXP-0.50	5/8	.625	.630	.50	5/8	4-1/2	1	1/2	1.31	1	25,100
CL-10-EXP-1.00				1.00							
CL-10-EXP-1.50				1.50							
CL-10-EXP-2.00				2.00							
CL-10-EXP-3.00				3.00							
CL-12-EXP-1.00	3/4	.750	.757	1.00	3/4	6	1-1/4	3/4	2.09	1-1/4	36,200
CL-12-EXP-2.00				2.00							
CL-12-EXP-3.00				3.00							
CL-12-EXP-4.00				4.00							
CL-16-EXP-1.00	1	1.000	1.010	1.00	1	6	1-1/4	3/4	2.09	1-1/4	64,300
CL-16-EXP-2.00				2.00							
CL-16-EXP-3.00				3.00							
CL-16-EXP-4.00				4.00							

* 2:1 Safety Factor

Carr Lane MANUFACTURING CO.®
4200 Carr Lane Ct., P.O. Box 191970
St. Louis, Missouri 63119-7970 USA
Phone: 314-647-6200, FAX: 314-647-5736
Web Site: www.carrlane.com

(Rev. 4-07)

CABLE ASSEMBLIES

SEE PAGES 32-33 FOR MATERIAL SPECIFICATIONS

Cable Assemblies are ideal for attaching removable tooling components. High-strength stranded wire cable with a green nylon coating. These versatile attachment cables are available with various loops, Cable Rings, Terminals, and Cable Tabs (see page 31 for assembly drawings and example part numbers).

Cable Assemblies are available in four cable sizes, in steel or stainless steel (#1 cable is only available in stainless steel). Stainless Cable Assemblies with Cable Rings are furnished with stainless Cable Rings. Minimum assembly length is 3.0". Length tolerance is held to ± 1/4" up to 24" long. See page 32-33 for dimensions and specifications of Ferrules, Cable Rings, Terminals, and Cable Tabs. Note: These Cable Assemblies should not be used for lifting and other high-tension applications.

To order Cable Assemblies with an uncrimped ferrule (for installation), add a suffix to the part number shown on page 31:

-L for uncrimped left end
-R for uncrimped right end
-LR for both ends uncrimped

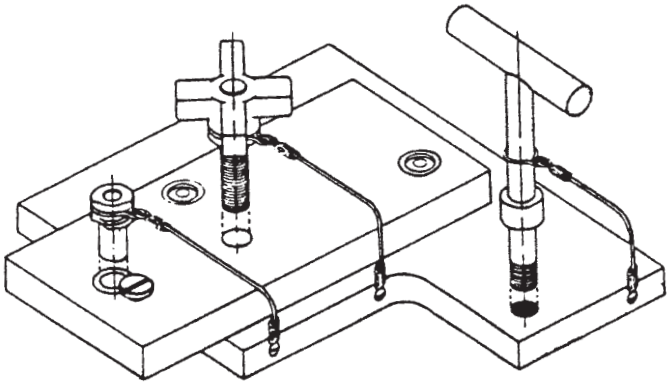

Cable Sizes

ASSEMBLY TYPE	LEFT END	RIGHT END	CABLE SIZES						
			1	2		3		4	
			STAINLESS	STEEL	STAINLESS	STEEL	STAINLESS	STEEL	STAINLESS
1	LOOP	PLAIN	CL-11-KA	CL-12-KA	CL-12-SKA	CL-13-KA	CL-13-SKA	CL-14-KA	CL-14-SKA
2	LOOP	LOOP	CL-21-KA	CL-22-KA	CL-22-SKA	CL-23-KA	CL-23-SKA	CL-24-KA	CL-24-SKA
3	CABLE RING	PLAIN	CL-31-KA	CL-32-KA	CL-32-SKA	CL-33-KA	CL-33-SKA	—	—
4	CABLE RING	LOOP	CL-41-KA	CL-42-KA	CL-42-SKA	CL-43-KA	CL-43-SKA	—	—
5	CABLE RING	CABLE RING	CL-51-KA	CL-52-KA	CL-52-SKA	CL-53-KA	CL-53-SKA	—	—
6	#5 TERMINAL	#5 TERMINAL	—	—	—	CL-63-KA	CL-63-SKA	—	—
7	#10 TERMINAL	#10 TERMINAL	—	CL-72-KA	CL-72-SKA	CL-73-KA	CL-73-SKA	—	—
8	#10 TERMINAL	LOOP	—	CL-82-KA	CL-82-SKA	—	—	—	—
9	#10 TERMINAL	CABLE RING	—	CL-92-KA	CL-92-SKA	—	—	—	—
10	#10 TERMINAL	PLAIN	—	CL-102-KA	CL-102-SKA	—	—	—	—
11	TAB	TAB	CL-111-KA	CL-112-KA	CL-112-SKA	CL-113-KA	CL-113-SKA	—	—
12	TAB	LOOP	CL-121-KA	CL-122-KA	CL-122-SKA	CL-123-KA	CL-123-SKA	—	—
13	TAB	CABLE RING	CL-131-KA	CL-132-KA	CL-132-SKA	CL-133-KA	CL-133-SKA	—	—
14	TAB	PLAIN	CL-141-KA	CL-142-KA	CL-142-SKA	CL-143-KA	CL-143-SKA	—	—

Carr Lane®
MANUFACTURING CO.
4200 Carr Lane Ct., P.O. Box 191970
St. Louis, Missouri 63119-7970 USA
Phone: 314-647-6200, FAX: 314-647-5736
Web Site: www.carrlane.com

(Rev. 9-02)

CABLE ASSEMBLIES

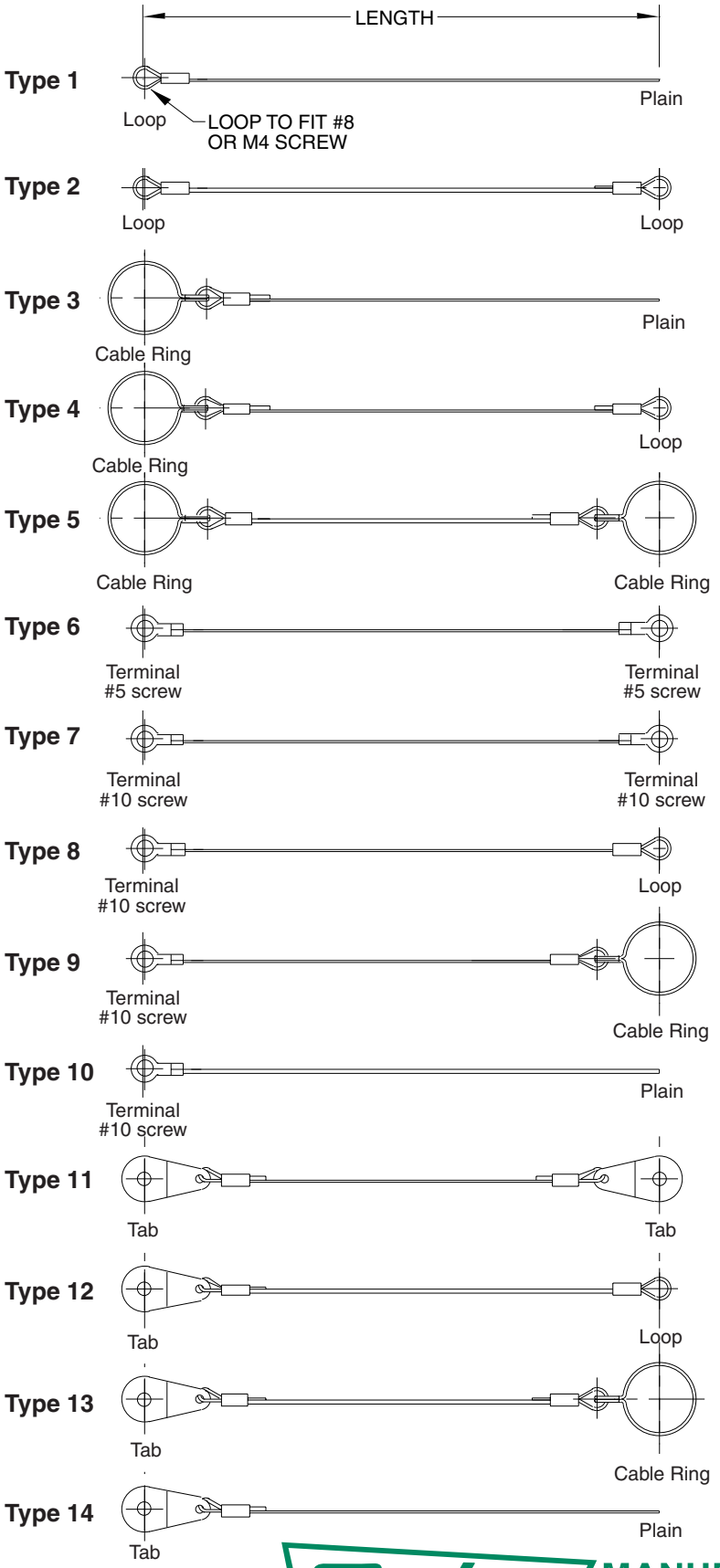

CL-12-KA-12.0
- Assembly Type (1)
- Cable Size (#2)
- Cable Length (12.0")

CL-22-KA-12.0
- Assembly Type (2)
- Cable Size (#2)
- Cable Length (12.0")

CL-32-KA-12.0-8
- Assembly Type (3)
- Cable Size (#2)
- Cable Length (12.0")
- Cable Ring Dia in 16ths (CL-8-KR)

CL-42-KA-12.0-8
- Assembly Type (4)
- Cable Size (#2)
- Cable Length (12.0")
- Cable Ring Dia in 16ths (CL-8-KR)

CL-52-KA-12.0-8-6
- Assembly Type (5)
- Cable Size (#2)
- Cable Length (12.0")
- Left Cable Ring Dia in 16ths (CL-8-KR)
- Right Cable Ring Dia in 16ths (CL-6-KR)

CL-63-KA-12.0
- Assembly Type (6)
- Cable Size (#3)
- Cable Length (12.0")

CL-72-KA-12.0
- Assembly Type (7)
- Cable Size (#2)
- Cable Length (12.0")

CL-82-KA-12.0
- Assembly Type (8)
- Cable Size (#2)
- Cable Length (12.0")

CL-92-KA-12.0-8
- Assembly Type (9)
- Cable Size (#2)
- Cable Length (12.0")
- Cable Ring Dia in 16ths (CL-8-KR)

CL-102-KA-12.0
- Assembly Type (10)
- Cable Size (#2)
- Cable Length (12.0")

CL-112-KA-12.0-.194TABA-.281TABS
- Assembly Type (11)
- Cable Size (#2)
- Cable Length (12.0")
- Left Cable Tab (CL-.194-TAB-A)
- Right Cable Tab (CL-.281-TAB-S)

CL-122-KA-12.0-.194TABA
- Assembly Type (12)
- Cable Size (#2)
- Cable Length (12.0")
- Cable Tab (CL-.194-TAB-A)

CL-132-KA-12.0-.194TABA-8
- Assembly Type (13)
- Cable Size (#2)
- Cable Length (12.0")
- Left Cable Tab (CL-.194-TAB-A)
- Right Cable Ring (CL-8-KR)

CL-142-KA-12.0-.194TABA
- Assembly Type (14)
- Cable Size (#2)
- Cable Length (12.0")
- Cable Tab (CL-.194-TAB-A)

Carr Lane®
MANUFACTURING CO.
4200 Carr Lane Ct., P.O. Box 191970
St. Louis, Missouri 63119-7970 USA
Phone: 314-647-6200, FAX: 314-647-5736
Web Site: www.carrlane.com

(Rev. 12-03)

CABLE

GALVANIZED STEEL OR STAINLESS STEEL, NYLON COATED (GREEN)

Cable Sizes

High-strength stranded wire cable with a green nylon coating. Choice of four cable diameters. Cable size 1 is made of stainless steel. Sizes 2, 3, and 4 are available in either galvanized steel or stainless steel. Cable is available in cut pieces (inch or mm), in bulk lengths, (feet or meters, 10 ft/ 3m minimum), or in 1000-ft rolls. Cut pieces are held to a ±1/4" length tolerance up to 24" long. Examples:

CL-2-C-12.0	(Cut piece, #2 cable, 12" long)
CL-2-C-350MM	(Cut piece, #2 cable, 350mm long)
CL-2-C-25FT	(Bulk length, #2 cable, 25' long)
CL-2-C-10M	(Bulk length, #2 cable, 10 meters long)
CL-2-C-1000FT	(1000 ft roll, #2 cable)

CABLE SIZE	MATERIAL	PART NO. CUT PIECES		PART NO. BULK LENGTHS		PART NO. 1000-FT ROLLS	D DIA		CONSTRUCTION	BREAKING STRENGTH (LBS)
		INCHES	MM	FT	METERS		COATED	UNCOATED		
1	STAINLESS	CL-1-C-xx.x	CL-1-C-xxxMM	CL-1-C-xxFT	CL-1-C-xxM	CL-1-C-1000FT	.044	.024	1x7	80
2	STEEL	CL-2-C-xx.x	CL-2-C-xxxMM	CL-2-C-xxFT	CL-2-C-xxM	CL-2-C-1000FT	.062	.047	7x7	270
	STAINLESS	CL-2-SC-xx.x	CL-2-SC-xxxMM	CL-2-SC-xxFT	CL-2-SC-xxM	CL-2-SC-1000FT				
3	STEEL	CL-3-C-xx.x	CL-3-C-xxxMM	CL-3-C-xxFT	CL-3-C-xxM	CL-3-C-1000FT	.094	.062	7x7	480
	STAINLESS	CL-3-SC-xx.x	CL-3-SC-xxxMM	CL-3-SC-xxFT	CL-3-SC-xxM	CL-3-SC-1000FT				
4	STEEL	CL-4-C-xx.x	CL-4-C-xxxMM	CL-4-C-xxFT	CL-4-C-xxM	CL-4-C-1000FT	.187	.125	7x19	800
	STAINLESS	CL-4-SC-xx.x	CL-4-SC-xxxMM	CL-4-SC-xxFT	CL-4-SC-xxM	CL-4-SC-1000FT				

FERRULES

COPPER, ELECTRO TIN PLATED

Ferrules are for crimping on our nylon-coated cable to make a loop. Ferrules may be slightly elliptical (precrimped) at our option. Available for all four standard cable sizes. Extra-long ferrules are available for #2 and #3 cable, to allow double crimping.

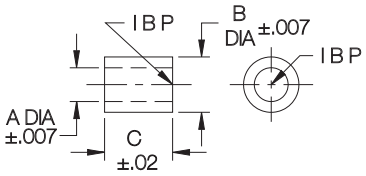

PART NO.	FITS CABLE	A	B	C
CL-1-F	SIZE 1	.094	.154	.315
CL-2-F	SIZE 2	.138	.213	.335
CL-4-F				.591
CL-3-F	SIZE 3	.185	.276	.374
CL-5-F				.827
CL-6-F	SIZE 4	.378	.520	1.260

TERMINALS

COPPER, ELECTRO TIN PLATED

Terminals are for crimping on our nylon-coated cable, to allow attaching the end with a screw. Available for #2 and #3 cable.

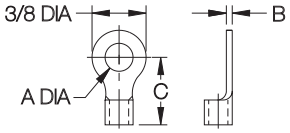

PART NO.	FITS CABLE	A		B	C
		A DIA	SCREW SIZE		
CL-.194-TERM-2	SIZE 2	.21	#10 (or M5)	.041	15/32
CL-.129-TERM	SIZE 3	.13	#5 (or M3)	.031	19/32
CL-.194-TERM		.21	#10 (or M5)	.041	

Carr Lane®
MANUFACTURING CO.
4200 Carr Lane Ct., P.O. Box 191970
St. Louis, Missouri 63119-7970 USA
Phone: 314-647-6200, FAX: 314-647-5736
Web Site: www.carrlane.com

(Rev. 12-08)

CABLE RINGS

SPRING STEEL WIRE, BLACK OXIDE FINISH

Cable Rings allow attaching Cable Assemblies to a diameter or radial groove. Can be used with cable sizes #1, #2, and #3. Available in steel or stainless steel.

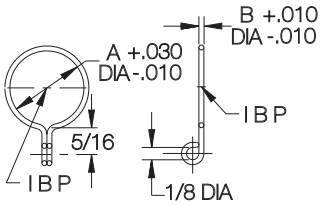

PART NO. STEEL	PART NO. STAINLESS	A DIA	B WIRE DIA STEEL	B WIRE DIA STAINLESS
CL-2-KR	CL-2-SKR	1/8 (also 3mm)	.045	.062
CL-3-KR	CL-3-SKR	3/16 (also 4&5mm)		
CL-4-KR	CL-4-SKR	1/4 (also 6&7mm)		
CL-5-KR	CL-5-SKR	5/16 (also 8mm)		
CL-6-KR	CL-6-SKR	3/8 (also 9&10mm)		
CL-7-KR	CL-7-SKR	7/16 (also 11mm)		
CL-8-KR	CL-8-SKR	1/2 (also 12&13mm)		
CL-9-KR	CL-9-SKR	9/16 (also 14&15mm)		
CL-10-KR	CL-10-SKR	5/8 (also 16mm)		
CL-11-KR	CL-11-SKR	11/16 (also 17&18mm)		
CL-12-KR	CL-12-SKR	3/4 (also 19&20mm)		
CL-13-KR	CL-13-SKR	13/16 (also 21mm)		
CL-14-KR	CL-14-SKR	7/8 (also 22 or 23mm)		
CL-15-KR	CL-15-SKR	15/16 (also 24mm)		
CL-16-KR	CL-16-SKR	1 (also 25&26mm)		
CL-17-KR	CL-17-SKR	1-1/16 (also 27mm)		
CL-18-KR	CL-18-SKR	1-1/8 (also 28&29mm)		
CL-19-KR	CL-19-SKR	1-3/16 (also 30&31mm)		
CL-20-KR	CL-20-SKR	1-1/4 (also 32mm)		
CL-21-KR	CL-21-SKR	1-5/16 (also 33&34mm)		
CL-22-KR	CL-22-SKR	1-3/8 (also 35 mm)		
CL-23-KR	CL-23-SKR	1-7/16 (also 36&37mm)		
CL-24-KR	CL-24-SKR	1-1/2 (also 38mm)		

CABLE TABS

ALUMINUM: 6061 ALUMINUM ALLOY, CLEAR ANODIZED. STAINLESS: 300-SERIES STAINLESS STEEL, PASSIVATED

Teardrop

Rectangular

Cable Tabs attach to our nylon-coated cable, to allow attaching the end with a screw. Can be used with cable sizes #1, #2, and #3. Available in two shapes, teardrop and rectangular. Available in aluminum and stainless steel.

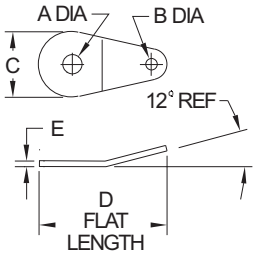

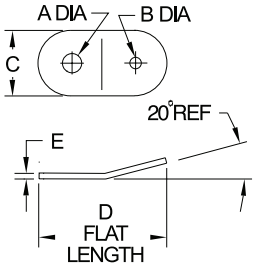

TEARDROP

PART NO. ALUMINUM	PART NO. STAINLESS STEEL	FITS CABLE	A DIA	A SCREW SIZE	B DIA	C	D	E
CL-.129-TAB-A	CL-.129-TAB-S	SIZES 1 TO 3	.13	#5 (or M3)	.13	.69	1.31	.06
CL-.194-TAB-A	CL-.194-TAB-S		.20	#10 (or M4)				
CL-.281-TAB-A	CL-.281-TAB-S		.28	1/4 (or M6)				

RECTANGULAR

PART NO. ALUMINUM	PART NO. STAINLESS STEEL	FITS CABLE	A DIA	A SCREW SIZE	B DIA	C	D	E
CL-.129-TABR-2-A	CL-.129-TABR-2-S	SIZES 1 TO 2	.13	#5 (or M3)	.09	1/2	1.14	.06
CL-.194-TABR-2-A	CL-.194-TABR-2-S		.20	#10 (or M4)				
CL-.281-TABR-2-A	CL-.281-TABR-2-S		.28	1/4 (or M6)				
CL-.194-TABR-3-A	CL-.194-TABR-3-S	SIZES 1 TO 3	.20	#10 (or M4)	.19	1/2	1.14	.06
CL-.281-TABR-3-A	CL-.281-TABR-3-S		.28	1/4 (or M6)				

CRIMPING TOOLS

STEEL WITH PLASTIC HANDGRIPS

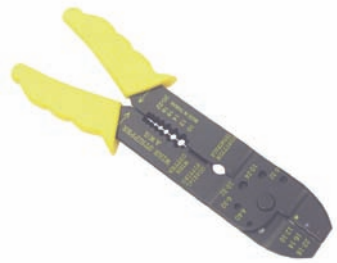

Plier tool for manually crimping ferrules on our nylon-coated cable. Crimps ferrules on either #1 or #2 cable. Heavier cable sizes require power crimping and should be ordered finish-crimped from the factory whenever possible.

PART NO.	FOR CABLE	FOR FERRULES
CL-1-CT	SIZE 1 SIZE 2	CL-1-F CL-2-F CL-4-F

Carr Lane®
MANUFACTURING CO.
4200 Carr Lane Ct., P.O. Box 191970
St. Louis, Missouri 63119-7970 USA
Phone: 314-647-6200, FAX: 314-647-5736
Web Site: www.carrlane.com

(Rev. 4-0

HOIST-RING SAFETY PRECAUTIONS

The following safety precautions apply to all lifting devices on pages 36-54 and page 20. Also see these individual pages for additional precautions and installation guidelines.

1. IMPORTANT! The load on each hoist ring is not simply total weight divided by the number of hoist rings. The resultant force can be significantly greater at shallow lift angles and with unevenly distributed loads. In the example below,

F = Force on each hoist ring
W = Total weight = 4000 lbs.
N = Number of hoist rings = 4
A = Lifting angle

$$F = \frac{W}{N \sin A}$$

$$\text{If } A = 70°,\ F = \frac{4000}{4 \sin 70°} = 1064 \text{ lbs.}$$

$$\text{If } A = 15°,\ F = \frac{4000}{4 \sin 15°} = 3864 \text{ lbs.}$$

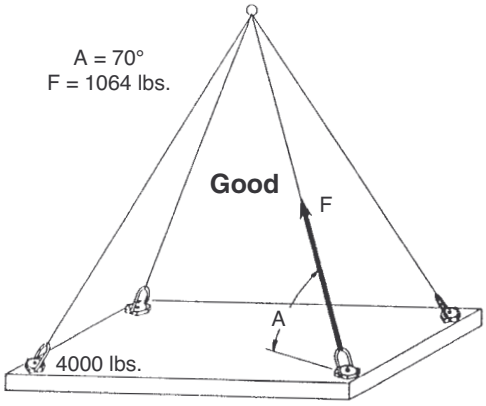

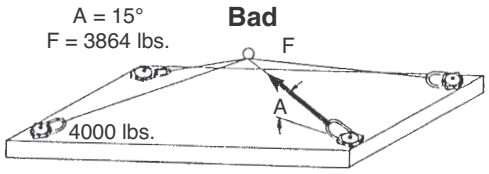

2. Despite the 5:1 safety factor on hoist rings, never exceed the rated load capactiy. This safety margin is needed in case of misuse, which could drastically lower load capacity.

3. Tensile strength of parent material should be above 80,000 psi to achieve full load rating. For weaker material, consider through-hole mounting with a nut and washer on the other side.

4. Do not allow hoist rings to bind. Use a spreader bar, if necessary, to avoid binding.

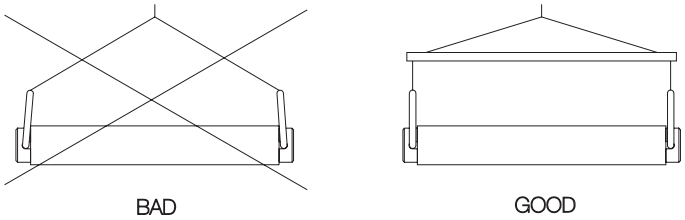

5. Do not use spacers between the hoist ring and the mounting surface.

6. Mounting surface must be flat and smooth for full contact under hoist ring. Tapped mounting holes must be perpendicular to the mounting surface.

7. Tighten mounting screws to the torque recommended. Periodically check torque because screws could loosen in extended service. For hoist rings not furnished with screws, mount using only high-quality socket-head cap screws.

8. Never lift with a hook or other device that could deform the lifting ring. Do not use cable assemblies on pages 30-31 for lifting.

9. Do not apply shock loads. Always lift gradually. Repeat magnaflux testing if shock loading ever occurs.

10. After installation, check that ring rotates and pivots freely in all directions.

CarrLane®
MANUFACTURING CO.
4200 Carr Lane Ct., P.O. Box 191970
St. Louis, Missouri 63119-7970 USA
Phone: 314-647-6200, FAX: 314-647-5736
Web Site: www.carrlane.com

(Rev. 7-10)

HOIST RINGS

SWIVEL HOIST RINGS

Swivel Hoist Rings
Pages 36-40

Heavy-Duty Swivel Hoist Rings
Pages 41-45

Shackle Hoist Rings
Page 46

Safety Hoist Rings
Page 46

Lifting Pins
Page 20

SIDE-PULL SWIVEL HOIST RINGS

Side-Pull Hoist Rings
Page 47

Heavy-Duty Side-Pull Hoist Rings
Page 48

PIVOTING HOIST RINGS

Pivoting Hoist Rings
Page 49

Pivoting Lift Plates
Page 49

Fast-Lok™ Plate Lifting System
Page 50

LIFTING EYES

Heavy-Duty Lifting Eyes
Page 52

Universal Lifting Rings
Page 52

HOIST-RING ACCESSORIES

Forged Shackles
Page 53

Forged Rings
Page 53

Hoist-Ring Clips
Page 53

Weld-In Threaded Inserts
Page 54

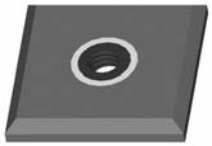

Renewal Road Plates
Page 54

MANUFACTURING CO.
4200 Carr Lane Ct., P.O. Box 191970
St. Louis, Missouri 63119-7970 USA
Phone: 314-647-6200, FAX: 314-647-5736
Web Site: www.carrlane.com

(Rev. 12-08)

SWIVEL HOIST RINGS

ALLOY STEEL, HEAT TREATED, BLACK OXIDE FINISH, 100% MAGNAFLUX INSPECTED

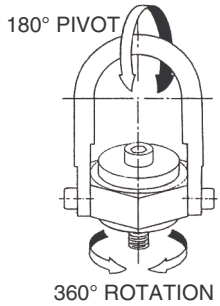

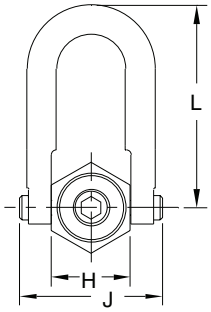

The original safety-engineered hoist ring. Pivots 180 degrees and swivels 360 degrees simultaneously to allow lifting from any direction. Safety factor = 5:1. Black oxide finish is standard, with cadmium plating available as a special (add -C to part number). Swivel Hoist Rings are also available in 300-series stainless steel, with a load rating equal to 50% of the steel version (see pages 38-39). Patent no. 3,297,293, 4,705,422, and 5,848,815.

Fasten hoist rings using the installation torque specified in the dimension table. Always install so that the hoist ring can pivot and swivel freely. Some hoist rings are available with a choice of bolt lengths. Use the shortest bolt length only for steel plates, the other lengths for weaker materials and for through-hole mounting with a washer and nut. See general Hoist Ring Safety Precautions on page 34.

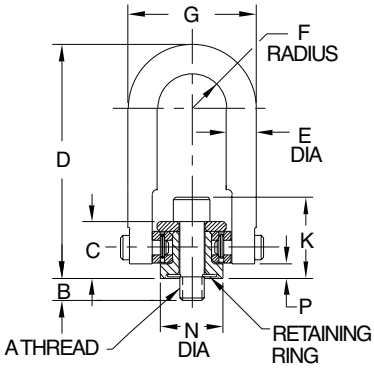

STANDARD RING (USA)

PART NO.	LOAD RATING (LBS)	A	B	C	D	E DIA	F	G	H	J	K	L	N DIA	P	INSTALLATION TORQUE (FT-LBS)	REPLACEMENT BOLT (WITH RETAINING RING
CL-23050-SHR	550	1/4-20	.54	.71	2.67	3/8	.43	1.61	1.00	1.84	.96	2.31	.75	.17	5	CL-23041-SHRB
CL-800-SHR-1	800	5/16-18	.29	.72	2.63	3/8	.44	1.62	1.00	1.82	1.03	2.35	.75	.17	7	CL-800-SHRB-1
CL-800-SHR-2			.54													CL-800-SHRB-2
CL-1000-SHR-1	1000	3/8-16	.54	.72	2.63	3/8	.44	1.62	1.00	1.82	1.09	2.35	.75	.17	12	CL-1000-SHRB-1
CL-23301-SHR	2500	1/2-13	1.07	.93	3.77	1/2	.70	2.40	1.49	2.58	1.43	3.31	1.25	.20	28	CL-23318-SHRB-1
CL-2500-SHR-1	2500	1/2-13	.77	1.23	4.77	3/4	.88	3.25	2.00	3.52	1.73	4.24	1.50	.16	28	CL-2500-SHRB-1
CL-2500-SHR-2			1.02													CL-2500-SHRB-2
CL-2500-SHR-3			1.27													CL-2500-SHRB-3
CL-4000-SHR-1	4000	5/8-11	.77	1.23	4.77	3/4	.88	3.25	2.00	3.52	1.86	4.24	1.50	.16	60	CL-4000-SHRB-1
CL-4000-SHR-2			1.02													CL-4000-SHRB-2
CL-4000-SHR-3			1.27													CL-4000-SHRB-3
CL-5000-SHR-1	5000	3/4-10	1.02	1.23	4.77	3/4	.88	3.25	2.00	3.52	1.98	4.24	1.50	.16	100	CL-5000-SHRB-1
CL-5000-SHR-2			1.52													CL-5000-SHRB-2
CL-7000-SHR-1	7000	3/4-10	1.03	1.72	6.55	1-1/16	1.40	4.94	3.00	5.06	2.47	5.80	2.37	.24	100	CL-7000-SHRB-1
CL-7000-SHR-2			1.53													CL-7000-SHRB-2
CL-8000-SHR-1	8000	7/8-9	1.03	1.72	6.55	1-1/16	1.40	4.94	3.00	5.06	2.60	5.80	2.37	.24	160	CL-8000-SHRB-1
CL-8000-SHR-2			1.53													CL-8000-SHRB-2
CL-10000-SHR-1	10000	1"-8	1.28	1.72	6.55	1-1/16	1.40	4.94	3.00	5.06	2.72	5.80	2.37	.24	230	CL-10000-SHRB-1
CL-10000-SHR-2			1.53													CL-10000-SHRB-2
CL-10000-SHR-3			2.28													CL-10000-SHRB-3
CL-15000-SHR-1	15000	1-1/4"-7	1.89	2.11	8.73	1-1/4	1.75	6.00	3.76	6.50	3.36	7.75	3.20	.35	470	CL-15000-SHRB-1
CL-24000-SHR-1	24000	1-1/2"-6	2.70	2.81	12.47	1-3/4	2.25	8.00	4.87	8.55	4.36	11.12	4.20	.47	800	CL-24000-SHRB-1
CL-30000-SHR-1	30000	2"-4-1/2	2.96	2.81	12.47	1-3/4	2.25	8.00	4.87	8.55	5.36	11.12	4.20	.47	800	—
CL-23503-SHR	50000	2-1/2"-4	4.00	4.09	16.87	2-1/4	3.00	10.50	6.52	11.67	6.59	14.50	5.75	1.12	2100	—
CL-23501-SHR		2-1/2"-8														—
CL-23600-SHR	75000	3"-4	5.20	5.27	19.50	2-3/4	3.75	13.00	8.10	14.15	8.27	17.00	7.25	1.00	4300	—
CL-23701-SHR	100000	3-1/2"-4	7.00	6.06	22.09	3-1/4	4.00	14.50	8.60	15.90	9.56	19.25	7.75	1.09	6600	—

Carr Lane®
MANUFACTURING CO.
4200 Carr Lane Ct., P.O. Box 191970
St. Louis, Missouri 63119-7970 USA
Phone: 314-647-6200, FAX: 314-647-5736
Web Site: www.carrlane.com

(Rev. 12-08)

SWIVEL HOIST RINGS

STANDARD RING (METRIC)

PART NO.	LOAD RATING (LBS)	A	B	C	D	E DIA	F	G	H	J	K	L	N DIA	P	INSTALLATION TORQUE (FT-LBS)	REPLACEMENT BOLT (WITH RETAINING RING)
CLM-800-SHR-2	880	M8	.66	.72	2.63	3/8	.44	1.62	1.00	1.82	1.02	2.35	.75	.17	7	CLM-800-SHRB-2
CLM-1000-SHR-1	1000	M10	.66	.72	2.63	3/8	.44	1.62	1.00	1.82	1.10	2.35	.75	.17	12	CLM-1000-SHRB-1
CLM-2500-SHR-1	2300	M12	.74	1.23	4.77	3/4	.88	3.25	2.00	3.52	1.70	4.24	1.50	.16	27	CLM-2500-SHRB-1
CLM-4000-SHR-2	4000	M16	1.13	1.23	4.77	3/4	.88	3.25	2.00	3.52	1.86	4.24	1.50	.16	59	CLM-4000-SHRB-2
CLM-24020-SHR	4800	M20	1.18	1.23	4.77	3/4	.88	3.25	2.00	3.52	2.01	4.25	1.50	.16	100	CLM-24220-SHRB
CLM-7000-SHR-2	6600	M20	1.26	1.72	6.55	1-1/16	1.40	4.94	3.00	5.06	2.51	5.80	2.31	.24	100	CLM-7000-SHRB-2
CLM-9000-SHR-2	9200	M24	1.46	1.72	6.55	1-1/16	1.40	4.94	3.00	5.06	2.66	5.80	2.31	.24	159	CLM-9000-SHRB-2
CLM-10000-SHR-1	10000	M30	2.12	1.71	6.52	1	1.40	4.80	3.00	5.14	2.72	5.80	2.31	.24	230	CLM-24230-SHRB
CLM-15000-SHR-1	15000	M30	1.81	2.11	8.73	1-1/4	1.75	6.00	3.76	6.50	3.36	7.75	3.20	.35	470	CLM-24421-SHRB
CLM-24042-SHR			2.60													CLM-24433-SHRB
CLM-24000-SHR-1	24000	M36	2.72	2.81	12.47	1-3/4	2.25	8.00	4.87	8.55	4.36	11.12	4.20	.47	800	CLM-24223-SHRB
CLM-27000-SHR-1	27000	M42	3.11	2.81	12.47	1-3/4	2.25	8.00	4.87	8.55	4.86	11.12	4.20	.47	800	CLM-24232-SHRB
CLM-30000-SHR-1	30000	M48	3.11	2.81	12.47	1-3/4	2.25	8.00	4.87	8.55	5.36	11.12	4.20	.47	800	CLM-24225-SHRB
CLM-24060-SHR	48000	M64	4.02	4.09	16.87	2-1/4	3.00	10.50	6.52	11.67	6.61	14.50	5.75	1.12	2100	CLM-24527-SHRB
CLM-24062-SHR	69000	M72	5.20	5.27	19.50	2-3/4	3.75	13.00	8.10	14.50	8.27	17.00	7.25	1.00	4200	CLM-24627-SHRB
CLM-24064-SHR	110000	M90	7.01	6.06	22.09	3-1/4	4.00	14.50	8.60	15.90	9.56	19.25	7.75	1.09	7100	CLM-24727-SHRB

Optional Long-Ring Version

Long-ring version provides extra reach and allows using larger lifting hooks.

LONG RING (USA)

PART NO.	LOAD RATING (LBS)	A	B	C	D	E DIA	F	G	H	J	K	L	N DIA	P	INSTALLATION TORQUE (FT-LBS)	REPLACEMENT BOLT (WITH RETAINING RING)
CL-23322-SHR	2500	1/2-13	.78	1.22	6.72	3/4	.88	3.25	1.99	3.52	1.72	6.19	1.50	.16	28	CL-23024-SHRB
CL-23323-SHR			1.03													CL-23025-SHRB
CL-23324-SHR			1.28													CL-23026-SHRB
CL-23320-SHR	4000	5/8-11	1.03	1.22	6.72	3/4	.88	3.25	1.99	3.52	1.85	6.19	1.50	.16	60	CL-23022-SHRB
CL-23321-SHR			1.28													CL-23023-SHRB
CL-23325-SHR	5000	3/4-10	1.03	1.22	6.72	3/4	.88	3.25	1.99	3.52	1.97	6.19	1.50	.16	100	CL-23027-SHRB
CL-23327-SHR			1.53													CL-23029-SHRB
CL-23329-SHR	7000	3/4-10	1.04	1.71	8.11	1	1.40	4.80	3.00	5.14	2.46	7.38	2.37	.24	100	CL-23122-SHRB
CL-23330-SHR			1.54													CL-23123-SHRB
CL-23328-SHR	8000	7/8-9	1.04	1.71	8.11	1	1.40	4.80	3.00	5.14	2.59	7.38	2.37	.24	160	CL-23121-SHRB
CL-23331-SHR	10000	1"-8	1.29	1.71	8.11	1	1.40	4.80	3.00	5.14	2.71	7.38	2.37	.24	230	CL-23125-SHRB
CL-23332-SHR			1.54													CL-23126-SHRB
CL-23333-SHR			2.29													CL-23127-SHRB

LONG RING (METRIC)

CLM-24014-SHR	2300	M12	.75	1.22	6.72	3/4	.88	3.25	1.99	3.52	1.69	6.19	1.50	.16	27	CLM-24212-SHRB
CLM-24018-SHR	4000	M16	.94	1.22	6.72	3/4	.88	3.25	1.99	3.52	1.85	6.19	1.50	.16	59	CLM-24216-SHRB
CLM-24021-SHR	4800	M20	1.18	1.22	6.72	3/4	.88	3.25	1.99	3.52	2.01	6.19	1.50	.16	100	CLM-24220-SHRB
CLM-24023-SHR	6600	M20	1.14	1.71	8.11	1	1.40	4.80	3.00	5.14	2.50	7.38	2.37	.24	100	CLM-24222-SHRB
CLM-24026-SHR	9200	M24	1.34	1.71	8.11	1	1.40	4.80	3.00	5.14	2.65	7.38	2.37	.24	230	CLM-24224-SHRB
CLM-24032-SHR	10000	M30	2.13	1.71	8.11	1	1.40	4.80	3.00	5.14	2.89	7.38	2.37	.24	230	CLM-24230-SHRB

Carr Lane®
MANUFACTURING CO.
4200 Carr Lane Ct., P.O. Box 191970
St. Louis, Missouri 63119-7970 USA
Phone: 314-647-6200, FAX: 314-647-5736
Web Site: www.carrlane.com

(Rev. 1-10)

SWIVEL HOIST RINGS

300-SERIES STAINLESS STEEL, PASSIVATED, 100% LIQUID-PENETRANT INSPECTED

NEW STAINLESS STEEL VERSION!

Stainless Steel

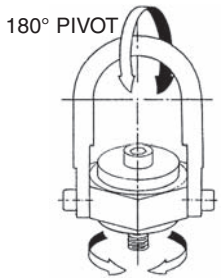

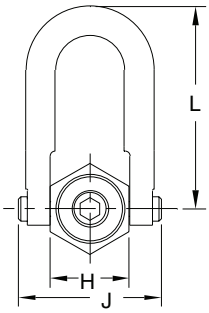

Stainless steel version of our original safety-engineered hoist ring, with a load rating equal to 50% of the steel version. Useful for corrosive, cryogenic, or elevated-temperature environments. Pivots 180 degrees and swivels 360 degrees simultaneously to allow lifting from any direction. Safety factor = 5:1. Patent no. 3,297,293, 4,705,422, and 5,848,815.

Fasten hoist rings using the installation torque specified in the dimension table. Always install so that the hoist ring can pivot and swivel freely. Some hoist rings are available with a choice of bolt lengths. Use the shortest bolt length only for steel plates, the other lengths for weaker materials and for through-hole mounting with a washer and nut. See general Hoist Ring Safety Precautions on page 34.

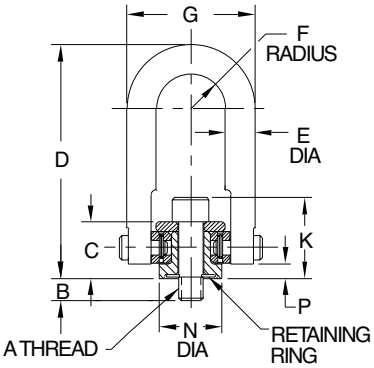

STANDARD RING — STAINLESS STEEL (USA)

PART NO.	LOAD RATING (LBS)	A	B	C	D	E DIA	F	G	H	J	K	L	N DIA	P	INSTALLATION TORQUE (FT-LBS)
CL-29050-SHR-S	275	1/4-20	.54	.71	2.67	3/8	.43	1.61	1.00	1.84	.96	2.31	.75	.17	2.5
CL-29051-SHR-S	400	5/16-18	.29	.71	2.67	3/8	.43	1.61	1.00	1.84	1.03	2.31	.75	.17	3.5
CL-29052-SHR-S			.54												
CL-29053-SHR-S	500	3/8-16	.54	.71	2.67	3/8	.43	1.61	1.00	1.84	1.09	2.31	.75	.17	6
CL-29301-SHR-S	1250	1/2-13	1.07	.93	3.77	1/2	.70	2.40	1.49	2.58	1.43	3.31	1.25	.20	14
CL-29004-SHR-S	1250	1/2-13	.78	1.22	4.78	3/4	.88	3.25	1.99	3.52	1.72	4.25	1.50	.16	14
CL-29005-SHR-S			1.03												
CL-29006-SHR-S			1.28												
CL-29001-SHR-S	2000	5/8-11	.78	1.22	4.78	3/4	.88	3.25	1.99	3.52	1.85	4.25	1.50	.16	30
CL-29002-SHR-S			1.03												
CL-29003-SHR-S			1.28												
CL-29007-SHR-S	2500	3/4-10	1.03	1.22	4.78	3/4	.88	3.25	1.99	3.52	1.97	4.25	1.50	.16	50
CL-29009-SHR-S			1.53												
CL-29102-SHR-S	3500	3/4-10	1.04	1.71	6.52	1	1.40	4.80	3.00	5.14	2.46	5.78	2.37	.24	50
CL-29103-SHR-S			1.54												
CL-29101-SHR-S	4000	7/8-9	1.04	1.71	6.52	1	1.40	4.80	3.00	5.14	2.59	5.78	2.37	.24	80
CL-29105-SHR-S	5000	1"-8	1.29	1.71	6.52	1	1.40	4.80	3.00	5.14	2.71	5.78	2.37	.24	115
CL-29106-SHR-S			1.54												
CL-29107-SHR-S			2.29												
CL-29401-SHR-S	7500	1-1/4"-7	1.89	2.11	8.73	1-1/4	1.75	6.00	3.76	6.50	3.36	7.75	3.20	.35	235
CL-29202-SHR-S	12000	1-1/2"-6	2.70	2.81	12.47	1-3/4	2.25	8.00	4.87	8.55	4.31	11.12	4.20	.47	400
CL-29200-SHR-S	15000	2"-4-1/2	2.96	2.81	12.47	1-3/4	2.25	8.00	4.87	8.55	5.31	11.12	4.20	.47	400
CL-29503-SHR-S	25000	2-1/2"-4	4.00	4.09	16.87	2-1/4	3.00	10.50	6.52	11.67	6.59	14.50	5.75	1.12	1050
CL-29501-SHR-S		2-1/2"-8													
CL-29600-SHR-S	37500	3"-4	5.20	5.27	19.50	2-3/4	3.75	13.00	8.10	14.15	8.27	17.00	7.25	1.00	2150
CL-29701-SHR-S	50000	3-1/2"-4	7.00	6.06	22.09	3-1/4	4.00	14.50	8.60	15.90	9.56	19.25	7.75	1.09	3300

CarrLane®
MANUFACTURING CO.
4200 Carr Lane Ct., P.O. Box 191970
St. Louis, Missouri 63119-7970 USA
Phone: 314-647-6200, FAX: 314-647-5736
Web Site: www.carrlane.com

(Rev. 4-08)

SWIVEL HOIST RINGS

STANDARD RING — STAINLESS STEEL (METRIC)

PART NO.	LOAD RATING (LBS)	A	B	C	D	E DIA	F	G	H	J	K	L	N DIA	P	INSTALLATION TORQUE (FT-LBS)
CLM-29808-SHR-S	440	M8	.67	.71	2.67	3/8	.43	1.61	1.00	1.84	1.03	2.31	.75	.17	3.5
CLM-29810-SHR-S	500	M10	.67	.71	2.67	3/8	.43	1.61	1.00	1.84	1.11	2.31	.75	.17	6
CLM-29812-SHR-S	1150	M12	.75	1.22	4.78	3/4	.88	3.25	2.00	3.52	1.69	4.25	1.50	.16	14
CLM-29816-SHR-S	2000	M16	.94	1.22	4.78	3/4	.88	3.25	2.00	3.52	1.85	4.25	1.50	.16	30
CLM-29820-SHR-S	2400	M20	1.18	1.22	4.78	3/4	.88	3.25	2.00	3.52	2.01	4.25	1.50	.16	50
CLM-29822-SHR-S	3300	M20	1.14	1.71	6.53	1	1.40	4.77	3.00	5.14	2.50	5.78	2.31	.24	50
CLM-29824-SHR-S	4600	M24	1.34	1.71	6.53	1	1.40	4.77	3.00	5.14	2.65	5.78	2.31	.24	115
CLM-29830-SHR-S	5000	M30	2.13	1.71	6.53	1	1.40	4.77	3.00	5.14	2.89	5.78	2.31	.24	115
CLM-29840-SHR-S	7500	M30	1.81	2.11	8.73	1.25	1.75	6.00	3.76	6.50	3.29	7.75	3.20	.35	235
CLM-29842-SHR-S			2.60												
CLM-29850-SHR-S	12000	M36	2.72	2.81	12.47	1.75	2.25	8.00	4.87	8.55	4.23	11.12	4.20	.47	400
CLM-29852-SHR-S	13500	M42	3.11	2.81	12.47	1.75	2.25	8.00	4.87	8.55	4.46	11.12	4.20	.47	400
CLM-29854-SHR-S	15000	M48	3.11	2.81	12.47	1.75	2.25	8.00	4.87	8.55	4.70	11.12	4.20	.47	400
CLM-29860-SHR-S	24000	M64	4.02	4.09	16.87	2.25	3.00	10.50	6.52	11.67	6.61	14.50	5.75	1.12	1050

Optional Long-Ring Version

Long-ring version provides extra reach and allows using larger lifting hooks.

LONG RING — STAINLESS STEEL (USA)

PART NO.	LOAD RATING (LBS)	A	B	C	D	E DIA	F	G	H	J	K	L	N DIA	P	INSTALLATION TORQUE (FT-LBS)
CL-29322-SHR-S	1250	1/2-13	.78	1.22	6.72	3/4	.88	3.25	1.99	3.52	1.72	6.19	1.50	.16	14
CL-29323-SHR-S			1.03												
CL-29324-SHR-S			1.28												
CL-29320-SHR-S	2000	5/8-11	1.03	1.22	6.72	3/4	.88	3.25	1.99	3.52	1.85	6.19	1.50	.16	30
CL-29321-SHR-S			1.28												
CL-29325-SHR-S	2500	3/4-10	1.03	1.22	6.72	3/4	.88	3.25	1.99	3.52	1.97	6.19	1.50	.16	50
CL-29327-SHR-S			1.53												
CL-29329-SHR-S	3500	3/4-10	1.04	1.71	8.11	1	1.40	4.80	3.00	5.14	2.46	7.38	2.37	.24	50
CL-29330-SHR-S			1.54												
CL-29328-SHR-S	4000	7/8-9	1.04	1.71	8.11	1	1.40	4.80	3.00	5.14	2.59	7.38	2.37	.24	80
CL-29331-SHR-S	5000	1"-8	1.29	1.71	8.11	1	1.40	4.80	3.00	5.14	2.71	7.38	2.37	.24	115
CL-29332-SHR-S			1.54												
CL-29333-SHR-S			2.29												

LONG RING — STAINLESS STEEL (METRIC)

CL-29814-SHR-S	1150	M12	.75	1.22	6.72	3/4	.88	3.25	1.99	3.52	1.69	6.19	1.50	.16	14
CL-29818-SHR-S	2000	M16	.94	1.22	6.72	3/4	.88	3.25	1.99	3.52	1.85	6.19	1.50	.16	30
CL-29821-SHR-S	2400	M20	1.18	1.22	6.72	3/4	.88	3.25	1.99	3.52	2.01	6.19	1.50	.16	50
CL-29823-SHR-S	3300	M20	1.14	1.71	8.11	1	1.40	4.80	3.00	5.14	2.50	7.38	2.37	.24	50
CL-29826-SHR-S	4600	M24	1.34	1.71	8.11	1	1.40	4.80	3.00	5.14	2.65	7.38	2.37	.24	115
Please contact factory	5000	M30	2.13	1.71	8.11	1	1.40	4.80	3.00	5.14	2.89	7.38	2.37	.24	235

Carr Lane®
MANUFACTURING CO.
4200 Carr Lane Ct., P.O. Box 191970
St. Louis, Missouri 63119-7970 USA
Phone: 314-647-6200, FAX: 314-647-5736
Web Site: www.carrlane.com

(Rev. 4-08)

SWIVEL HOIST RINGS

ALLOY STEEL, HEAT TREATED, BLACK OXIDE FINISH, 100% MAGNAFLUX INSPECTED

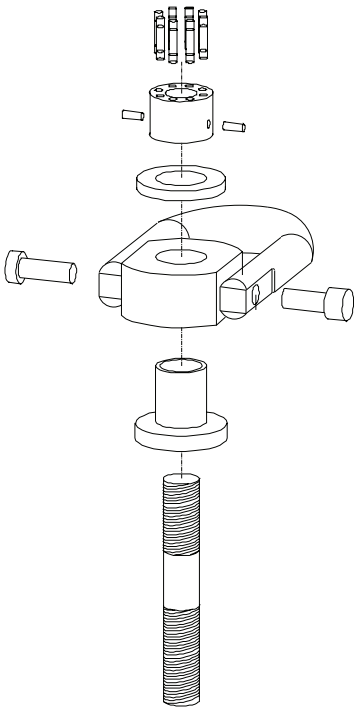

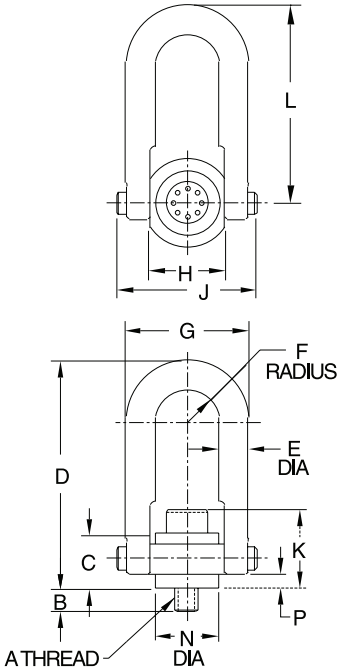

EZ-Torque™
Swivel Hoist Rings

Extra-large Swivel Hoist Rings with our patented EZ-Torque™ system that allows tightening several smaller bolt heads with a standard torque wrench instead of tightening one large bolt with a special tool. Swivel Hoist Rings pivot 180 degrees and swivel 360 degrees simultaneously to allow lifting from any direction. Safety factor = 5:1. Black oxide finish is standard, with cadmium plating available as a special. Available in load capacities up to 250000 lbs. Patent no. 3,297,293, 4,705,422, 5,848,815, and 6,199,925. Fasten hoist rings using the installation torque specified in the dimension table. Always install so that the hoist ring can pivot and swivel freely. See general Hoist Ring Safety Precautions on page 34.

EZ-TORQUE™ SWIVEL HOIST RINGS (USA)

PART NO.	LOAD RATING (LBS)	A	B	C	D	E DIA	F	G	H	J	K	L	N DIA	P	INSTALLATION TORQUE (FT-LBS)
CL-23490-SHR	15000	1-1/4"-7	1.89	2.11	8.73	1-1/4	1.75	6.0	3.76	6.50	3.60	7.75	3.20	.35	10
CL-23494-SHR	24000	1-1/2"-6	2.70	2.81	12.47	1-3/4	2.25	8.0	4.87	8.55	4.60	11.12	4.20	.47	18
CL-23290-SHR	30000	2"-4-1/2	2.96	2.81	12.47	1-3/4	2.25	8.0	4.87	8.55	4.60	11.12	4.20	.47	23
CL-23592-SHR	50000	2-1/2"-4	4.00	4.09	16.87	2-1/4	3.00	10.5	6.52	11.67	6.89	14.50	5.75	1.12	49
CL-23590-SHR		2-1/2"-8													
CL-23690-SHR	75000	3"-4	5.20	5.27	19.50	2-3/4	3.75	13.0	8.10	14.15	8.72	17.00	7.25	1.00	92
CL-23790-SHR	100000	3-1/2"-4	7.00	6.06	22.09	3-1/4	4.00	14.5	8.60	15.90	9.56	19.25	7.75	1.09	98
CL-23792-SHR	150000	4-1/4"-4	8.50	7.50	27.38	4	5.00	18.0	10.75	19.69	10.45	23.81	9.87	1.33	123
CL-23794-SHR	200000	5"-4	9.00	9.00	33.00	5	6.00	22.0	13.00	24.00	13.00	28.50	12.38	1.88	193
CL-23798-SHR	250000	6"-4	9.00	9.00	33.00	5	6.00	22.0	13.00	24.00	13.00	28.50	12.38	1.88	207

Carr Lane®
MANUFACTURING CO.
4200 Carr Lane Ct., P.O. Box 191970
St. Louis, Missouri 63119-7970 USA
Phone: 314-647-6200, FAX: 314-647-5736
Web Site: www.carrlane.com

(Rev. 4-08)

HEAVY-DUTY SWIVEL HOIST RINGS

ALLOY STEEL, HEAT TREATED, BLACK OXIDE FINISH, 100% MAGNAFLUX INSPECTED

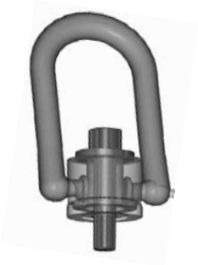

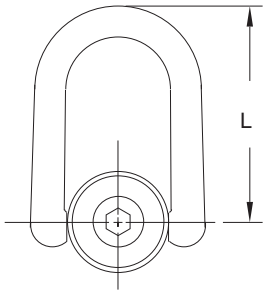

The next generation of Swivel Hoist Rings, with a heavy-duty forged steel ring. Pivots 180 degrees and swivels 360 degrees simultaneously to allow lifting from any direction. Safety factor = 5:1. Black oxide finish is standard, with cadmium plating available as a special. Meets OSHA standards and Military Specification MIL-STD-1365(11) or MIL-STD-209C. Patent no. 4,570,987, 4,641,986, 5,405,210, and other patents pending.

Fasten hoist rings using the installation torque specified in the dimension table. Always install so that the hoist ring can pivot and swivel freely. Some hoist rings are available with a choice of bolt lengths. Use the shortest bolt length only for steel plates, the other lengths for weaker materials and for through-hole mounting with a washer and nut. See general Hoist Ring Safety Precautions on page 34.

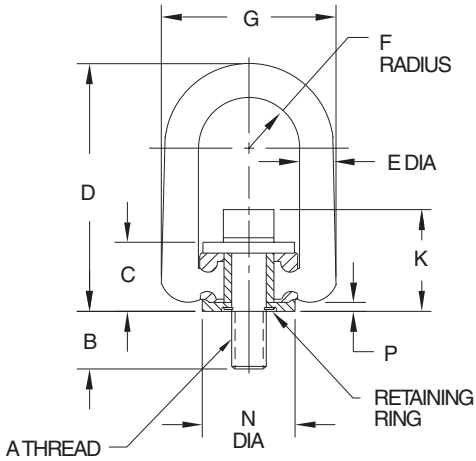

STANDARD RING (USA)

PART NO.	LOAD RATING (LBS)	A	B	C	D	E DIA	F	G	K	L	N DIA	P	INSTALLATION TORQUE (FT-LBS)	REPLACEMENT BOLT (WITH RETAINING RING)
CL-33112-SHR	550	1/4-20	.56	.96	3.23	.44	.65	2.29	1.22	2.98	1.25	.15	5	CL-33152-SHRB
CL-33212-SHR	800	5/16-18	.56	.96	3.23	.44	.65	2.29	1.28	2.98	1.25	.15	7	CL-33252-SHRB
CL-33214-SHR			1.06											CL-33254-SHRB
CL-33312-SHR	1000	3/8-16	.56	.96	3.23	.44	.65	2.29	1.34	2.98	1.25	.15	12	CL-33352-SHRB
CL-33314-SHR			1.06											CL-33354-SHRB
CL-33316-SHR	2250	1/2-13	1.06	.96	3.23	.44	.65	2.29	1.34	2.98	1.25	.15	25	—
CL-33512-SHR	2500	1/2-13	.75	1.50	5.31	.75	1.00	3.50	2.00	4.75	1.89	.17	28	CL-33554-SHRB
CL-33515-SHR			1.00											CL-33555-SHRB
CL-33516-SHR			1.25											CL-33556-SHRB
CL-33612-SHR	4000	5/8-11	.75	1.50	5.31	.75	1.00	3.50	2.12	4.75	1.89	.17	60	CL-33653-SHRB
CL-33614-SHR			1.00											CL-33654-SHRB
CL-33615-SHR			1.25											CL-33655-SHRB
CL-33714-SHR	5000	3/4-10	1.00	1.50	5.31	.75	1.00	3.50	2.25	4.75	1.89	.17	100	CL-33754-SHRB
CL-33716-SHR			1.50											CL-33756-SHRB
CL-33108-SHR	7000	3/4-10	.95	2.05	7.37	1.00	1.40	5.10	2.80	6.62	2.81	.18	100	CL-33119-SHRB
CL-33102-SHR			1.20											CL-33122-SHRB
CL-33103-SHR			1.45											CL-33123-SHRB
CL-33104-SHR	8000	7/8-9	.95	2.05	7.37	1.00	1.40	5.10	2.93	6.62	2.81	.18	160	—
CL-33101-SHR			1.20											CL-33121-SHRB
CL-33106-SHR	10000	1"-8	1.20	2.05	7.37	1.00	1.40	5.10	3.05	6.62	2.81	.18	230	CL-33126-SHRB
CL-33105-SHR			1.45											CL-33125-SHRB
CL-33107-SHR			2.20											CL-33127-SHRB
CL-33402-SHR	15000	1-1/4"-7	1.88	2.87	9.22	1.25	2.00	6.75	4.23	8.12	3.88	.32	470	CL-33419-SHRB
CL-33401-SHR			2.63											CL-33421-SHRB
CL-33420-SHR	20000	1-3/8"-6	2.63	2.87	9.22	1.25	2.00	6.75	4.35	8.12	3.88	.32	670	CL-33429-SHRB
CL-33424-SHR	24000	1-1/2"-6	2.63	2.87	9.22	1.25	2.00	6.75	4.48	8.12	3.88	.32	800	CL-33422-SHRB
CL-33427-SHR	30000	2"-4-1/2	2.96	2.87	9.22	1.25	2.00	6.75	4.48	8.12	3.88	.32	800	—
CL-33432-SHR		2"-8												—

Carr Lane®
MANUFACTURING CO.
4200 Carr Lane Ct., P.O. Box 191970
St. Louis, Missouri 63119-7970 USA
Phone: 314-647-6200, FAX: 314-647-5736
Web Site: www.carrlane.com

(Rev. 4-10)

HEAVY-DUTY SWIVEL HOIST RINGS

STANDARD RING (METRIC)

PART NO.	LOAD RATING (LBS)	A	B	C	D	E DIA	F	G	K	L	N DIA	P	INSTALLATION TORQUE (FT-LBS)	REPLACEMENT BOLT (WITH RETAINING RING)
CLM-34212-SHR	880	M8	.63	.96	3.23	.44	.65	2.29	1.28	2.98	1.25	.16	7	CLM-34252-SHRB
CLM-34214-SHR			.83											CLM-34254-SHRB
CLM-34312-SHR	1000	M10	.63	.96	3.23	.44	.65	2.29	1.35	2.98	1.25	.16	12	CLM-34352-SHRB
CLM-34314-SHR			1.02											CLM-34354-SHRB
CLM-34515-SHR	2300	M12	.98	1.50	5.31	.75	1.00	3.50	2.00	4.75	1.89	.17	27	CLM-34555-SHRB
CLM-34516-SHR			1.26											CLM-34556-SHRB
CLM-34614-SHR	4000	M16	.98	1.50	5.31	.75	1.00	3.50	2.12	4.75	1.89	.17	59	CLM-34654-SHRB
CLM-34615-SHR			1.26											CLM-34655-SHRB
CLM-34714-SHR	4800	M20	.98	1.50	5.31	.75	1.00	3.50	2.25	4.75	1.89	.17	100	CLM-34130-SHRB
CLM-34716-SHR			1.50											CLM-34131-SHRB
CLM-34101-SHR	6600	M20	1.10	2.05	7.37	1.00	1.40	5.10	2.81	6.62	2.81	.18	100	CLM-34120-SHRB
CLM-34102-SHR	9200	M24	1.10	2.05	7.37	1.00	1.40	5.10	3.00	6.62	2.81	.18	230	CLM-34121-SHRB
CLM-34103-SHR			1.50											CLM-34123-SHRB
CLM-34105-SHR	10000	M30	1.50	2.05	7.37	1.00	1.40	5.10	3.23	6.62	2.81	.18	230	CLM-34126-SHRB
CLM-34107-SHR			1.89											CLM-34127-SHRB
CLM-34401-SHR	15000	M30	2.64	2.87	9.22	1.25	2.00	6.75	4.23	8.12	3.88	.32	470	CLM-34421-SHRB
CLM-34402-SHR	24000	M36	2.64	2.87	9.22	1.25	2.00	6.75	4.48	8.12	3.88	.32	800	CLM-34422-SHRB
CLM-34403-SHR	27000	M42	3.15	2.87	9.22	1.25	2.00	6.75	4.48	8.12	3.88	.32	800	CLM-24232-SHRB
CLM-34404-SHR	30000	M48	3.15	2.87	9.22	1.25	2.00	6.75	4.48	8.12	3.88	.32	800	CLM-24225-SHRB

ADDITIONAL LONG-RING SIZES NOW AVAILABLE!

Optional Long-Ring Version

Long-ring version provides extra reach and allows using larger lifting hooks.

LONG RING (USA)

PART NO.	LOAD RATING (LBS)	A	B	C	D	E DIA	F	G	K	L	N DIA	P	INSTALLATION TORQUE (FT-LBS)	REPLACEMENT BOLT (WITH RETAINING RING)
CL-33513-SHR	2500	1/2-13	.75	1.50	6.87	.75	1.00	3.50	2.00	6.31	1.89	.17	28	CL-33554-SHRB
CL-33505-SHR			1.00											CL-33555-SHRB
CL-33517-SHR			1.25											CL-33556-SHRB
CL-33613-SHR	4000	5/8-11	.75	1.50	6.87	.75	1.00	3.50	2.12	6.31	1.89	.17	60	CL-33653-SHRB
CL-33604-SHR			1.00											CL-33654-SHRB
CL-33616-SHR			1.25											CL-33655-SHRB
CL-33715-SHR	5000	3/4-10	1.00	1.50	6.87	.75	1.00	3.50	2.25	6.31	1.89	.17	100	CL-33754-SHRB
CL-33717-SHR			1.50											CL-33756-SHRB
CL-33168-SHR	7000	3/4-10	.95	2.05	9.00	1.00	1.40	5.10	2.80	8.25	2.81	.18	100	CL-33119-SHRB
CL-33162-SHR			1.20											CL-33122-SHRB
CL-33163-SHR			1.45											CL-33123-SHRB
CL-33164-SHR	8000	7/8-9	.95	2.05	9.00	1.00	1.40	5.10	2.93	8.25	2.81	.18	160	—
CL-33161-SHR			1.20											CL-33121-SHRB
CL-33165-SHR	10000	1”-8	1.20	2.05	9.00	1.00	1.40	5.10	3.05	8.25	2.81	.18	230	CL-33126-SHRB
CL-33166-SHR			1.45											CL-33125-SHRB
CL-33167-SHR			2.20											CL-33127-SHRB

LONG RING (METRIC)

CLM-34505-SHR	2300	M12	.98	1.50	6.87	.75	1.00	3.50	2.00	6.31	1.89	.17	27	CLM-34555-SHRB
CLM-34517-SHR			1.26											CLM-34556-SHRB
CLM-34604-SHR	4000	M16	.98	1.50	6.87	.75	1.00	3.50	2.12	6.31	1.89	.17	59	CLM-34654-SHRB
CLM-34616-SHR			1.26											CLM-34655-SHRB
CLM-34715-SHR	4800	M20	.98	1.50	6.87	.75	1.00	3.50	2.25	6.31	1.89	.17	100	CLM-34130-SHRB
CLM-34717-SHR			1.501											CLM-34131-SHRB
CLM-34161-SHR	6600	M20	1.10	2.05	9.00	1.00	1.40	5.10	2.81	8.25	2.81	.18	100	CLM-34120-SHRB
CLM-34162-SHR	9200	M24	1.10	2.05	9.00	1.00	1.40	5.10	3.00	8.25	2.81	.18	230	CLM-34121-SHRB
CLM-34163-SHR			1.50											CLM-34123-SHRB
CLM-34165-SHR	10000	M30	1.50	2.05	9.00	1.00	1.40	5.10	3.23	8.25	2.81	.18	230	CLM-34126-SHRB
CLM-34167-SHR			1.89											CLM-34127-SHRB

Carr Lane®
MANUFACTURING CO.
4200 Carr Lane Ct., P.O. Box 191970
St. Louis, Missouri 63119-7970 USA
Phone: 314-647-6200, FAX: 314-647-5736
Web Site: www.carrlane.com

(Rev. 4-08)

HEAVY-DUTY SWIVEL HOIST RINGS

ALLOY STEEL, HEAT TREATED, BLACK OXIDE FINISH, 100% MAGNAFLUX INSPECTED

Heavy-Duty Road-Plate Swivel Hoist Rings

Heavy-Duty Road-Plate Swivel Hoist Rings have a shorter, larger-diameter bolt, ideal for lifting heavy plates. Forged alloy-steel ring pivots 180 degrees and swivels 360 degrees simultaneously to allow lifting from any direction. Safety factor = 5:1. Black oxide finish is standard, with cadmium plating available as a special. Patent no. 4,570,987, 4,641,986, 5,405,210, and other patents pending. Fasten hoist rings using the installation torque specified in the dimension table. Always install so that the hoist ring can pivot and swivel freely. See general Hoist Ring Safety Precautions on page 34.

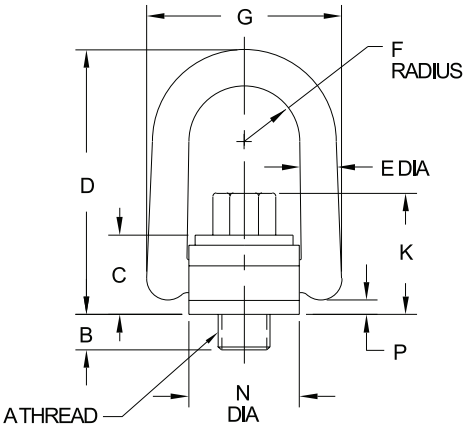

HEAVY-DUTY ROAD-PLATE SWIVEL HOIST RINGS (USA)

PART NO.	LOAD RATING (LBS)	A	B	C	D	E DIA	F	G	K	N DIA	P	INSTALLATION TORQUE (FT-LBS)
CL-36660-SHR	10000	1-1/4"-7	1.00	2.39	7.37	1.00	1.40	5.10	3.05	2.81	.18	230
CL-36665-SHR		1-1/2"-6	1.50									
CL-36670-SHR	15000	1-1/4"-7	1.00	3.29	9.22	1.25	2.00	6.75	3.91	3.88	.32	470
CL-36675-SHR		1-1/2"-6	1.50									

Heavy-Duty Bar-Tite™ Swivel Hoist Rings

Bar-Tite™ hoist rings have a steel bar knob for tightening with a lever bar instead of a wrench. These heavy-duty hoist rings have a shorter, larger-diameter bolt, ideal for lifting heavy plates. Forged alloy-steel ring pivots 180 degrees and swivels 360 degrees simultaneously to allow lifting from any direction. Safety factor = 5:1. Black oxide finish is standard, with cadmium plating available as a special. Patent no. 4,570,987, 4,641,986, 5,405,210, and other patents pending. Fasten hoist rings using the installation torque specified in the dimension table. Always install so that the hoist ring can pivot and swivel freely. See general Hoist Ring Safety Precautions on page 34.

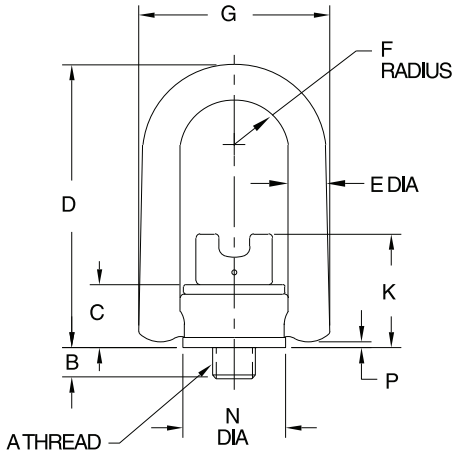

HEAVY-DUTY BAR-TITE™ SWIVEL HOIST RINGS (USA)

PART NO.	RING LENGTH	LOAD RATING (LBS)	A	B	C	D	E DIA	F	G	K	N DIA	P	INSTALLATION TORQUE (FT-LBS)
CL-34930-SHR	STANDARD RING	10000	1-1/4"-7	1.00	2.05	7.37	1.00	1.40	5.10	3.80	2.81	.18	230
CL-34940-SHR			1-1/4" COIL										
CL-34950-SHR			1-1/4" ACME										
CL-34960-SHR			1-1/2"-6	1.50									
CL-34970-SHR			1-1/2" COIL										
CL-34980-SHR			1-1/2" ACME										
CL-34935-SHR	LONG RING	10000	1-1/4"-7	1.00	2.05	9.00	1.00	1.40	5.10	3.80	2.81	.18	230
CL-34945-SHR			1-1/4" COIL										
CL-34955-SHR			1-1/4" ACME										
CL-34965-SHR			1-1/2"-6	1.50									
CL-34975-SHR			1-1/2" COIL										
CL-34985-SHR			1-1/2" ACME										

Carr Lane MANUFACTURING CO.
4200 Carr Lane Ct., P.O. Box 191970
St. Louis, Missouri 63119-7970 USA
Phone: 314-647-6200, FAX: 314-647-5736
Web Site: www.carrlane.com

(Rev. 4-08)

HEAVY-DUTY SWIVEL HOIST RINGS

ALLOY STEEL, HEAT TREATED, BLACK OXIDE FINISH, 100% MAGNAFLUX INSPECTED

Heavy-Duty Lug-Lok™ Swivel Hoist Rings

Lug-Lok™ hoist rings have a large-diameter lug nut for tightening without a wrench. Turn the lug nut clockwise by hand until flush with the plate, then tighten by tapping one of the lugs with a small hammer or tapper. These heavy-duty hoist rings have a shorter, larger-diameter bolt, ideal for lifting heavy plates. Forged alloy-steel ring pivots 180 degrees and swivels 360 degrees simultaneously to allow lifting from any direction. Safety factor = 5:1. Black oxide finish is standard, with cadmium plating available as a special. Patent no. 4,570,987, 4,641,986, 5,405,210, and other patents pending. Fasten hoist rings using the installation torque specified in the dimension table. Always install so that the hoist ring can pivot and swivel freely. See general Hoist Ring Safety Precautions on page 34.

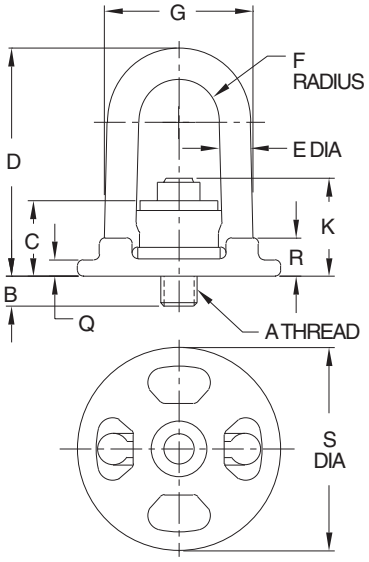

HEAVY-DUTY LUG-LOK™ SWIVEL HOIST RINGS (USA)

PART NO.	LOAD RATING (LBS)	A	B	C	D	E DIA	F	G	K	Q	R	S DIA	INSTALLATION TORQUE (FT-LBS)
CL-36920-SHR	10000	1-1/4"-7	1.00	2.80	7.75	1.00	1.40	5.10	3.05	.75	1.41	7.00	230
CL-36930-SHR		1-1/4" COIL											
CL-36940-SHR		1-1/4" ACME											
CL-36925-SHR		1-1/2"-6	1.50										
CL-36935-SHR		1-1/2"COIL											
CL-36945-SHR		1-1/2" ACME											

Heavy-Duty Weld-Mount Swivel Hoist Rings

These Heavy-Duty Swivel Hoist Rings are mounted by welding. Forged alloy-steel ring pivots 180 degrees and swivels 360 degrees simultaneously to allow lifting from any direction. Safety factor = 5:1. Black oxide finish is standard, with cadmium plating available as a special. Patent no. 4,570,987, 4,641,986, 5,405,210, and other patents pending. To install, weld around the entire perimeter of the base (certified welding). Always install so that the hoist ring can pivot and swivel freely. See general Hoist Ring Safety Precautions on page 34. Rated load capacity applies to the hoist-ring assembly only. Workpiece material must be capable of supporting the applicable weight.

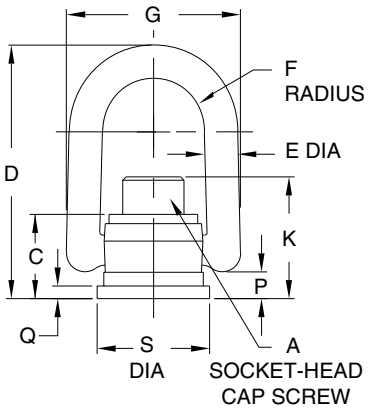

HEAVY-DUTY WELD-MOUNT SWIVEL HOIST RINGS (USA)

PART NO.	LOAD RATING (LBS)	A	C	D	E DIA	F	G	K	P	Q	S DIA
CL-36640-SHR	5000	5/8-11	1.63	5.47	.75	1.00	3.50	2.26	.42	.25	2.45
CL-36645-SHR	10000	1"-8	2.30	7.64	1.00	1.50	5.10	3.42	.56	.38	3.51
CL-36650-SHR	24000	1-1/2"-6	3.12	9.50	1.25	2.00	6.75	4.62	.82	.50	4.70

Carr Lane®
MANUFACTURING CO.
4200 Carr Lane Ct., P.O. Box 191970
St. Louis, Missouri 63119-7970 USA
Phone: 314-647-6200, FAX: 314-647-5736
Web Site: www.carrlane.com

(Rev. 4-08)

HEAVY-DUTY SWIVEL HOIST RINGS

ALLOY STEEL, HEAT TREATED, BLACK OXIDE FINISH, 100% MAGNAFLUX INSPECTED

Heavy-Duty Super Coil™ Swivel Hoist Rings

Heavy-Duty Super-Coil™ Swivel Hoist Rings are furnished with a coil bolt, ideal for temporary attachment to steel structures and construction material. Forged alloy-steel ring pivots 180 degrees and swivels 360 degrees simultaneously to allow lifting from any direction. Safety factor = 5:1. Black oxide finish is standard, with cadmium plating available as a special. Patent no. 4,570,987, 4,641,986, 5,405,210, 5,732,991, and other patents pending. Fasten hoist rings using the installation torque specified in the dimension table. Always install so that the hoist ring can pivot and swivel freely. See general Hoist Ring Safety Precautions on page 34.

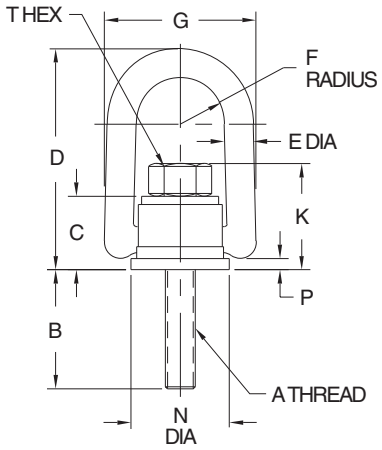

HEAVY-DUTY SUPER-COIL™ SWIVEL HOIST RINGS (USA)

PART NO.	LOAD RATING (LBS)	A	B	C	D	E DIA	F	G	K	N DIA	P	T	INSTALLATION TORQUE (FT-LBS)
CL-33716-SHR-CT	5000	3/4" COIL	4.00	1.50	5.31	.75	1.00	3.50	2.25	1.89	.17	1-1/8	100
CL-33107-SHR-CT	10000	1" COIL	5.00	2.05	7.37	1.00	1.40	5.10	3.05	2.81	.18	1-1/2	230
CL-33401-SHR-CT	15000	1-1/4" COIL	7.00	2.87	9.22	1.25	2.00	6.75	4.23	3.88	.32	1-7/8	470
CL-33424-SHR-CT	24000	1-1/2" COIL	7.00	2.87	9.22	1.25	2.00	6.75	4.48	3.88	.32	2-1/4	800

Heavy-Duty Swivel Lift Plates

These Heavy-Duty Swivel Hoist Rings have a center throughhole instead of a bolt, for mounting with a custom anchoring system. Forged alloy-steel ring pivots and swivels 360 degrees simultaneously to allow lifting from any direction. Safety factor = 5:1. Black oxide finish is standard, with cadmium plating available as a special. Patent no. 4,570,987, 4,641,986, 5,405,210, and other patents pending. Rated load capacity is based on using a bolt or stud with 180,000 psi ultimate tensile strength. If a bolt with lower strength is used, or if the workpiece anchor material is incapable of supporting the weight, then rated load capacity must be reduced accordingly. Always install so that the hoist ring can pivot and swivel freely. See general Hoist Ring Safety Precautions on page 34.

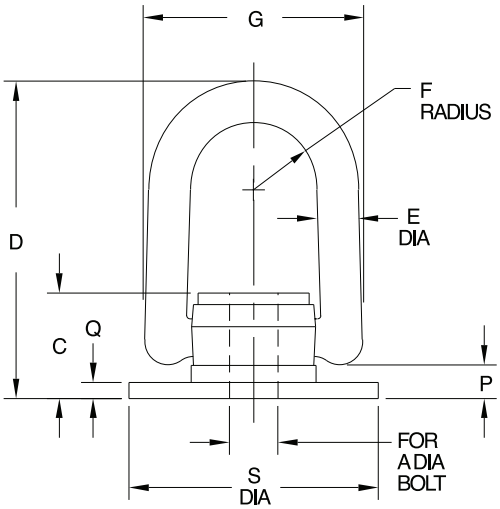

HEAVY-DUTY SWIVEL LIFT PLATES

PART NO.	LOAD RATING (LBS)	A DIA	C	D	E DIA	F	G	P	Q	S DIA
CL-36600-SHR	7000	3/4	2.39	7.00	1.00	1.40	5.10	.41	.18	5.00
CL-36605-SHR	10000	1	2.39	7.00	1.00	1.40	5.10	.41	.18	5.00
CL-36610-SHR	15000	1-1/4	3.29	8.90	1.25	2.00	6.75	.50	.32	7.00
CL-36615-SHR	24000	1-1/2	3.29	8.90	1.25	2.00	6.75	.50	.32	7.00

Carr Lane®
MANUFACTURING CO.
4200 Carr Lane Ct., P.O. Box 191970
St. Louis, Missouri 63119-7970 USA
Phone: 314-647-6200, FAX: 314-647-5736
Web Site: www.carrlane.com

(Rev. 4-10)

SHACKLE HOIST RINGS

ALLOY STEEL, HEAT TREATED, BLACK OXIDE FINISH, 100% MAGNAFLUX INSPECTED

These swivel hoist rings are designed for permanent mounting on tooling and equipment. Forged alloy-steel shackle pivots 180 degrees and swivels 360 degrees simultaneously to allow lifting from any direction. Can be bolted or welded in place. Safety factor = 5:1. Patent no. 5,823,588.

Fasten hoist ring with four grade-8 socket-head cap screws, using the installation torque specified in the dimension table. Alternatively, install by welding around the entire perimeter of the base (certified welding). Always install so that the hoist ring can pivot and swivel freely. See general Hoist Ring Safety Precautions on page 34.

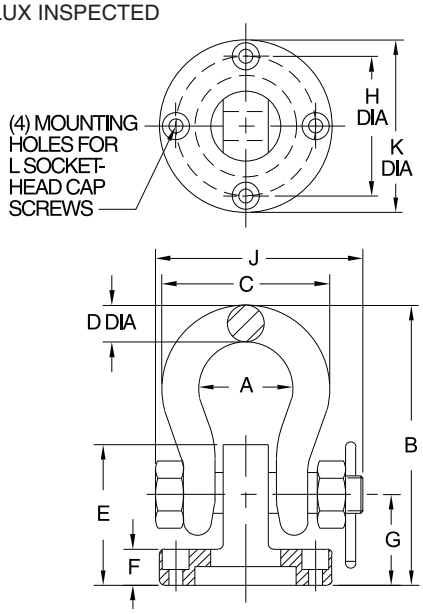

USA

PART NO.	LOAD RATING (LBS)	NOMINAL SHACKLE SIZE	A	B	C	D	E	F	G	H DIA	J	K DIA	L
CL-36510-SHHR	2000	3/8	1.03	2.96	1.78	.38	1.43	.40	.91	1.56	2.17	2.10	1/4-20 x 1/2
CL-36520-SHHR	3000	7/16	1.16	3.55	2.03	.44	1.76	.52	1.16	1.76	2.51	2.40	5/16-18 x 1/2
CL-36530-SHHR	4000	1/2	1.31	3.91	2.31	.50	1.91	.52	1.21	2.10	2.80	2.90	3/8-16 x 5/8
CL-36540-SHHR	6500	5/8	1.69	4.97	2.94	.69	2.41	.64	1.51	2.56	3.53	3.50	7/16-14 x 3/4
CL-36550-SHHR	13000	7/8	2.28	6.85	4.03	.97	3.31	.90	2.06	3.40	4.71	4.60	5/8-11 x 1
CL-36560-SHHR	19000	1-1/8	2.91	8.75	5.16	1.25	4.01	1.14	2.61	4.00	5.09	5.40	3/4-10 x 1-1/4
CL-36570-SHHR	24000	1-1/4	3.25	9.68	5.75	1.38	4.51	1.30	2.91	4.50	6.51	6.10	7/8-9 x 2

SAFETY HOIST RINGS

RING: FORGED 4130 STEEL, HEAT TREATED, BLACK OXIDE FINISH, 100% MAGNAFLUX INSPECTED
BASE: FORGED 1045 STEEL, BLACK OXIDE FINISH

Forged base rotates 360 degrees while the solid-loop forged ring pivots 180 degrees, to allow lifting from any direction. High-strength shoulder screw furnished. Safety factor = 5:1. Fasten hoist ring using the installation torque specified in the dimension table. Always install so that the hoist ring can pivot and swivel freely. See general Hoist Ring Safety Precautions on page 34.

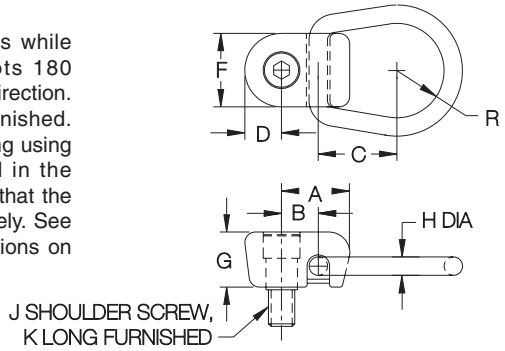

USA

PART NO.	LOAD RATING (LBS)	A	B	C	D	F	G	H DIA	J	K	R	INSTALLATION TORQUE (FT-LBS)	REPLACEMENT SHOULDER SCREW
CL-10-SHR	1000	1-1/8	5/8	1-1/2	5/8	1-1/4	7/8	5/16	3/8-16	5/8	13/16	7-10	CL-10-SHRB
CL-25-SHR	2500	1-5/8	7/8	1-7/8	7/8	1-3/4	1-5/16	7/16	5/8-11	7/8	1-1/8	42-50	CL-25-SHRB

METRIC

CLM-10-SHR	1000	1-1/8	5/8	1-1/2	5/8	1-1/4	7/8	5/16	M10	.59	13/16	7-10	CLM-10-SHRB
CLM-25-SHR	2500	1-5/8	7/8	1-7/8	7/8	1-3/4	1-5/16	7/16	M16	.79	1-1/8	42-50	CLM-25-SHRB

Carr Lane MANUFACTURING CO.
4200 Carr Lane Ct., P.O. Box 191970
St. Louis, Missouri 63119-7970 USA
Phone: 314-647-6200, FAX: 314-647-5736
Web Site: www.carrlane.com

(Rev. 4-08)

SIDE-PULL HOIST RINGS

ALLOY STEEL, BLACK OXIDE FINISH, 100% MAGNAFLUX INSPECTED

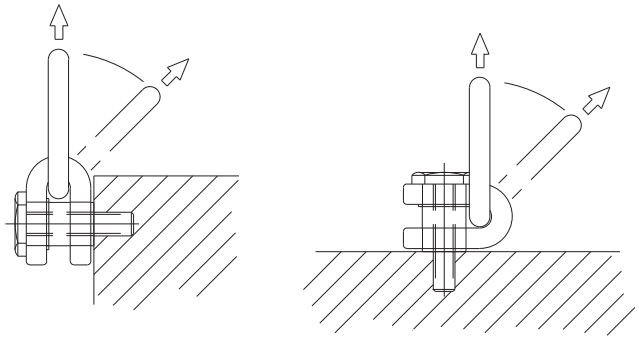

Side-Pull Hoist Rings are ideal for side mounting. Flip and turn loads without unhooking (use with a spreader bar). Forged alloy-steel ring pivots 180 degrees and swivels 360 degrees simultaneously to allow lifting from any direction. Large, weldless forged ring can accommodate larger lifting hooks. Meets OSHA standards and Military Specifications MIL-STD-209C and MIL-STD-1365(11). Safety factor = 5:1. Fasten hoist ring using the installation torque specified in the dimension table. Always install so that the hoist ring can pivot and swivel freely. See general Hoist Ring Safety Precautions on page 34.

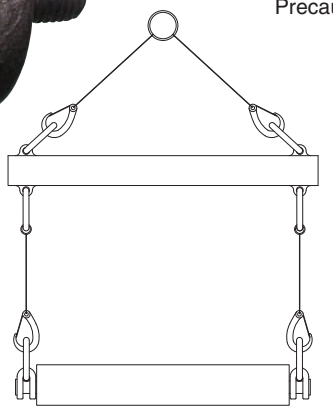

Side-Pull Hoist Rings are ideal whenever side mounting is required.

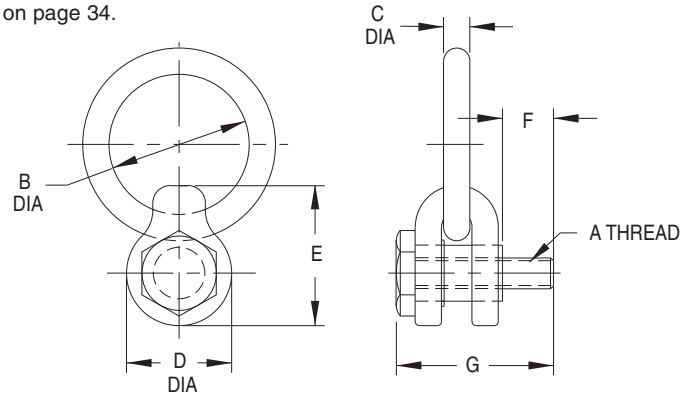

USA

PART NO.	LOAD RATING (LBS)	A	B DIA	C DIA	D DIA	E	F	G	INSTALLATION TORQUE (FT-LB)
CL-650-SPHR	650	5/16-18	2	3/8	1-1/2	2	5/8	2-5/16	3.5
CL-800-SPHR	800	3/8-16					3/4	2-5/8	4.5
CL-1800-SPHR	1800	1/2-13	3	5/8	2-3/8	3-3/16	1	3-1/2	15
CL-2500-SPHR	2500	5/8-11					1-1/4	3-7/8	25
CL-4000-SPHR	4100	3/4-10	4	1	3-3/4	5	1-1/2	5-3/4	50
CL-7000-SPHR	7100	1"-8					1-3/4	6	90
CL-14000-SPHR	14000	1-1/4"-7	6	1-3/8	4-5/8	6-13/16	2	6-7/8	150
CL-36143-SPHR		1-1/4"-8							
CL-36145-SPHR	17000	1-1/2"-6					2-1/2	7-7/8	250
CL-36148-SPHR		1-1/2"-8							
CL-36150-SPHR	29000	2"-4-1/2	5-1/4 X 10-1/2 OVAL	1-1/2	4-5/8	6-13/16	3-1/8	8-9/16	300
CL-36155-SPHR		2"-8							

METRIC

CLM-36710-SPHR	880	M8	2	3/8	1-1/2	2	.63	2.13	6
CLM-36715-SPHR	1100	M10					.79	2.29	12
CLM-36720-SPHR	1900	M12					.94	3.32	20
CLM-36725-SPHR	3500	M16	3	5/8	2-3/8	3-3/16	1.26	4.76	47
CLM-36730-SPHR	5500	M20					1.57	5.07	92
CLM-36735-SPHR	7700	M24	4	1	3-3/4	5	1.89	5.39	150
CLM-36740-SPHR	12000	M30					2.36	6.54	300
CLM-36745-SPHR	17000	M36	6	1-3/8	4-5/8	6-13/16	2.83	7.02	530
CLM-36748-SPHR	24000	M42					3.31	7.49	850
CLM-36750-SPHR	30000	M48	5-1/4 X 10-1/2 OVAL	1-1/2	4-5/8	6-13/16	3.78	7.96	1200
CLM-36755-SPHR	55000	M64					5.04	9.22	3000

Carr Lane®
MANUFACTURING CO.
4200 Carr Lane Ct., P.O. Box 191970
St. Louis, Missouri 63119-7970 USA
Phone: 314-647-6200, FAX: 314-647-5736
Web Site: www.carrlane.com

(Rev. 4-08)

HEAVY-DUTY SIDE-PULL HOIST RINGS

ALLOY STEEL, BLACK OXIDE FINISH, 100% MAGNAFLUX INSPECTED

Heavy-Duty version of our Side-Pull Hoist Rings offers greater load capacity in a given mounting-thread size. Side-Pull Hoist Rings are ideal for side mounting. Flip and turn loads without unhooking (use with a spreader bar). Forged alloy-steel ring pivots and swivels 360 degrees simultaneously to allow lifting from any direction. Safety factor = 5:1. Patent no. 6,267,422. Fasten hoist ring using the installation torque specified in the dimension table. Always install so that the hoist ring can pivot and swivel freely. See general Hoist Ring Safety Precautions on page 34.

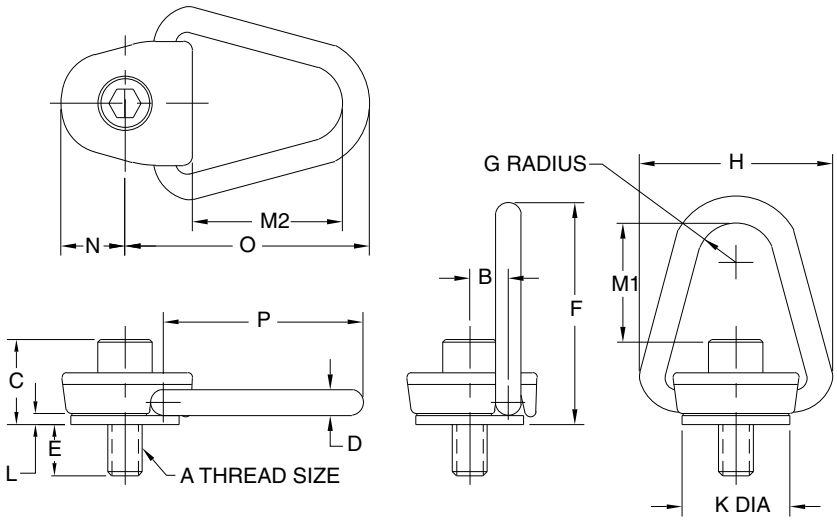

USA

PART NO.	LOAD RATING (LBS)	A	B	C	D	E	F	G	H	K DIA	L	M1	M2	N	O	P	INSTALLATION TORQUE (FT-LBS)
CL-36305-SPHR	800	5/16-18	.88	1.33	.50	.48	4.72	.75	3.88	2.19	.22	2.89	3.19	1.25	5.12	4.25	7
CL-36310-SPHR	1000	3/8-16		1.39								2.84					12
CL-36315-SPHR	2500	1/2-13		1.53		.98						2.70					28
CL-36320-SPHR	4000	5/8-11		1.64								2.92					60
CL-36325-SPHR	5000	3/4-10		1.78		1.23						2.94					100
CL-36330-SPHR	7000	3/4-10	1.25	2.12	.75	1.25	6.25	.88	5.25	3.25	.25	4.00	4.19	1.62	6.75	5.62	100
CL-36335-SPHR	8000	7/8-9		2.25								3.88					160
CL-36340-SPHR	10000	1"-8		2.38		1.50						3.75					230

METRIC

CLM-36805-SPHR	880	M8	.88	1.34	.50	.55	4.72	.75	3.88	2.20	.20	2.87	3.19	1.25	5.12	4.25	7
CLM-36810-SPHR	1000	M10		1.42		.94						2.80					12
CLM-36815-SPHR	2300	M12		1.50		1.46						2.72					27
CLM-36820-SPHR	4000	M16		1.65								2.56					59
CLM-36825-SPHR	4800	M20		1.81								2.40					100
CLM-36830-SPHR	6600	M20	1.25	2.24	.75	1.54	6.25	.88	5.25	3.11	.24	3.27	4.19	1.62	6.75	5.62	100
CLM-36835-SPHR	9200	M24		2.40		1.69						3.11					230

Carr Lane®
MANUFACTURING CO.
4200 Carr Lane Ct., P.O. Box 191970
St. Louis, Missouri 63119-7970 USA
Phone: 314-647-6200, FAX: 314-647-5736
Web Site: www.carrlane.com

(Rev. 7-10)

PIVOTING HOIST RINGS

RING: FORGED 4130 STEEL, HEAT TREATED, BLACK OXIDE FINISH, 100% MAGNAFLUX INSPECTED
BASE: FORGED 1045 STEEL, BLACK OXIDE FINISH

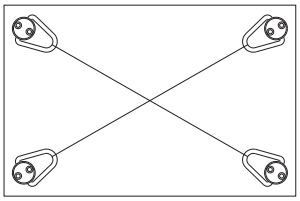

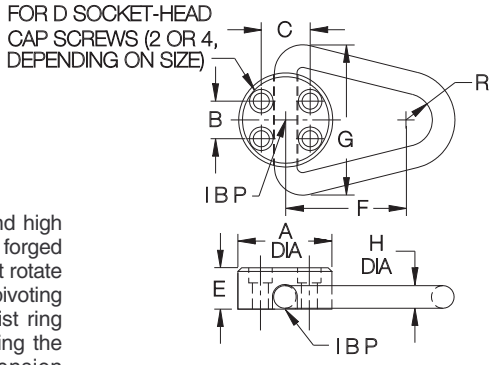

Economical hoist ring with a low profile and high load capacity. Forged base and solid-loop forged ring. Pivots a full 180 degrees, but does not rotate (install so that lifting force is applied in the pivoting direction). Safety factor = 6:1. Fasten hoist ring with grade-8 socket-head cap screws, using the installation torque specified in the dimension table. The smallest three sizes have two mounting holes, the largest two sizes have four. See general Hoist Ring Safety Precautions on page 34.

PART NO.	LOAD RATING (LBS)	A DIA	B	C	D THREAD X MIN LENGTH	E	F	G	H DIA	R	INSTALLATION TORQUE (FT-LBS)	SCREW EXTENSION BELOW BASE
CL-20-HR	2000	1-3/4	0	1	5/16-18x1.00 (or M8x25mm)	3/4	2	2-1/2	5/16	1/2	4-7	.58 (or 14mm)
CL-25-HR	2500	2-1/4		1-1/8	3/8-16x1.25 (or M10x30mm)	7/8	2-1/2	3-3/16	3/8	5/8	7-10	.79 (or 18mm)
CL-50-HR	5000	2-5/8		1-1/2	1/2-13x1.50 (or M12x40mm)	1-1/8	3	3-7/8	1/2	3/4	20-25	.90 (or 25mm)
CL-120-HR	12000	3-1/8	1-1/4	1-5/8	1/2-13x1.75 (or M12x45mm)	1-3/8	4	5	3/4	7/8	20-25	.90 (or 23mm)
CL-200-HR	20000	3-5/8		2-1/16	5/8-11x2.50 (or M16x65mm)	1-7/8	5	6-3/16	1	1	42-50	1.25 (or 33mm)

PIVOTING LIFT PLATES

ALLOY STEEL, HEAT TREATED, BLACK OXIDE FINISH, 100% MAGNAFLUX INSPECTED

These hoist rings have a center throughhole instead of a bolt, for mounting with a custom anchoring system. Heavy-duty forged alloy-steel ring pivots a full 180 degrees, but does not rotate (install so that lifting force is applied in the pivoting direction). Safety factor = 5:1. Black oxide finish is standard, with cadmium plating available as a special. Patent no. 4,570,987, 4,641,986, 5,405,210, and other patents pending.

Rated load capacity is based on using a bolt or stud with 180,000 psi ultimate tensile strength. If a bolt with lower strength is used, or if the workpiece anchor material is incapable of supporting the weight, then rated load capacity must be reduced accordingly. See general Hoist Ring Safety Precautions on page 34.

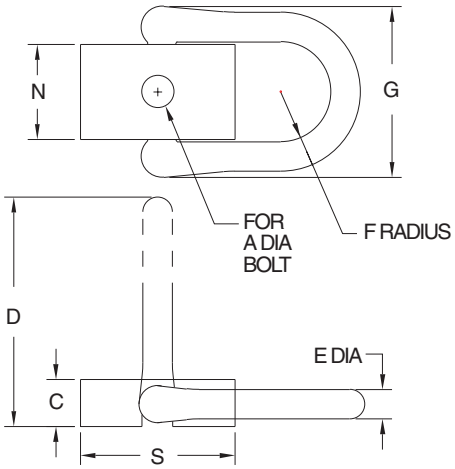

PART NO.	LOAD RATING (LBS)	A DIA	C	D	E DIA	F	G	N	S
CL-36620-PLP	7000	3/4	1.70	7.33	1.00	1.40	5.10	3.00	5.00
CL-36625-PLP	10000	1							
CL-36630-PLP	15000	1-1/4	2.50	8.28	1.25	2.00	6.75	4.00	6.62
CL-36635-PLP	24000	1-1/2							

Carr Lane MANUFACTURING CO.
4200 Carr Lane Ct., P.O. Box 191970
St. Louis, Missouri 63119-7970 USA
Phone: 314-647-6200, FAX: 314-647-5736
Web Site: www.carrlane.com

(Rev. 7-10)

FAST-LOK™
PLATE LIFTING SYSTEM

ALLOY STEEL, HEAT TREATED, BLACK OXIDE FINISH

Plate-lifting system with a weld-on base and totally removable shackle assembly, allowing the plate surface to remain totally free of obstructions. No tools required for installing or removing the shackle assembly. To install, first insert the two-piece clevis, then attach the shackle with either the bolt provided or with a Fast Lok™ Detent Pin. Forged alloy-steel shackle pivots a full 180 degrees, but does not rotate (install so that lifting force is applied in the pivoting direction). Patent pending.

The hoist ring's flat base should be permanently installed by cutting a hole in the plate and welding in place, flush with the surface. Weld around the entire perimeter of the base (certified welding). See general Hoist Ring Safety Precautions on page 34. Rated load capacity applies to the hoist-ring assembly only. Workpiece material must be capable of supporting the applicable weight.

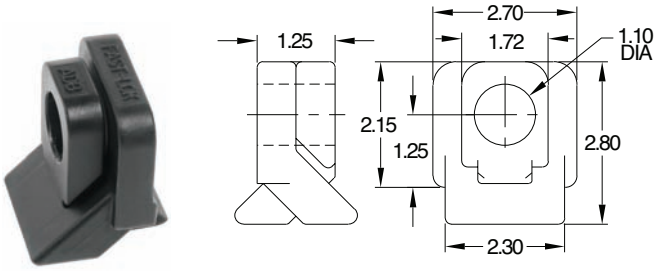

FAST-LOK™ CLEVIS

PART NO.	LIFTING-SYSTEM LOAD RATING (LBS)	LIFTING-SYSTEM PIN DIA
CL-36905-FLPS	10000	1.00

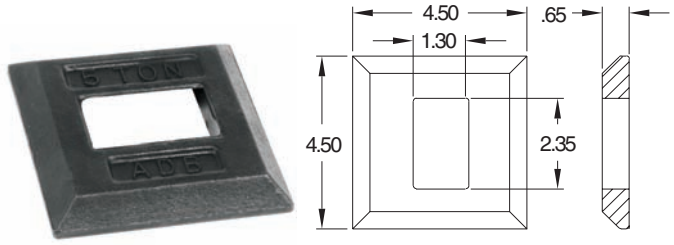

FAST-LOK™ BASE

PART NO.	LIFTING-SYSTEM LOAD RATING (LBS)	LIFTING-SYSTEM PIN DIA
CL-36900-FLPS	10000	1.00

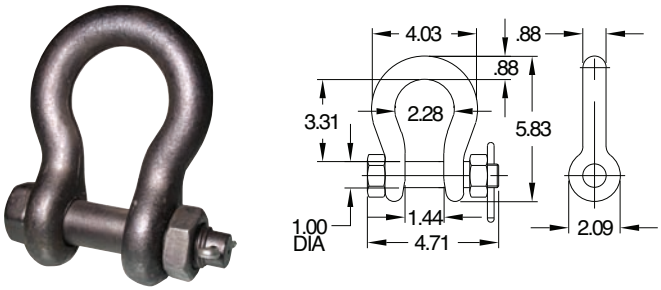

FORGED ANCHOR SHACKLE

PART NO.	LIFTING-SYSTEM LOAD RATING (LBS)	NOMINAL SHACKLE SIZE	LIFTING-SYSTEM PIN OR BOLT DIA
CL-36551-FAS	10000	7/8	1.00

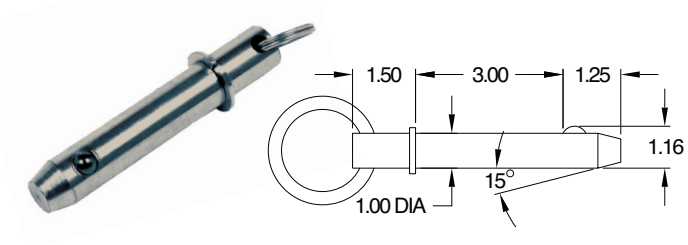

FAST-LOK™ DETENT PIN

PART NO.	LIFTING-SYSTEM LOAD RATING (LBS)	LIFTING-SYSTEM PIN DIA
CL-36903-FLPS	10000	1.00

Carr Lane®
MANUFACTURING CO.
4200 Carr Lane Ct., P.O. Box 191970
St. Louis, Missouri 63119-7970 USA
Phone: 314-647-6200, FAX: 314-647-5736
Web Site: www.carrlane.com

(Rev. 7-10)

SCISSOR-LOK™ PLATE LIFTING SYSTEM

ALLOY STEEL, HEAT TREATED, BLACK OXIDE FINISH

NEW!

Scissor-Lok™ Tool ready for insertion into Fast-Lok™ Plate

Plate-lifting system with a weld-on base and totally removable shackle assembly, allowing the plate surface to remain totally free of obstructions. No tools required for installing or removing the shackle assembly. To install, first insert the two-piece clevis, then attach the shackle with either the bolt provided or with a Fast Lok™ Detent Pin. Forged alloy-steel shackle pivots a full 180 degrees, but does not rotate (install so that lifting force is applied in the pivoting direction). Patent pending.

The hoist ring's flat base should be permanently installed by cutting a hole in the plate and welding in place, flush with the surface. Weld around the entire perimeter of the base (certified welding). See general Hoist Ring Safety Precautions on page 34. Rated load capacity applies to the hoist-ring assembly only. Workpiece material must be capable of supporting the applicable weight.

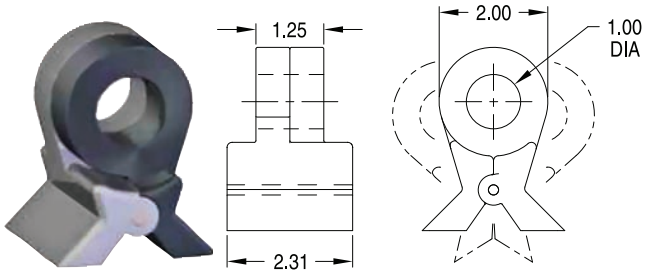

SCISSOR-LOK™ TOOL

PART NO.	LIFTING-SYSTEM LOAD RATING (LBS)	LIFTING-SYSTEM PIN DIA
CL-36860-SLPS	10000	1.00

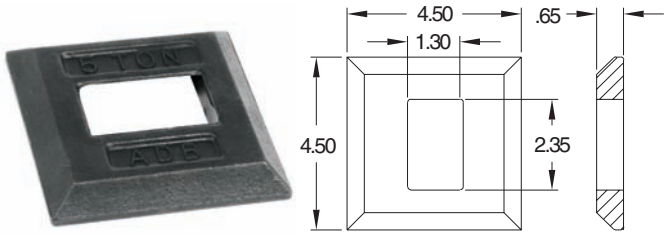

FAST-LOK™ BASE

PART NO.	LIFTING-SYSTEM LOAD RATING (LBS)	LIFTING-SYSTEM PIN DIA
CL-36900-FLPS	10000	1.00

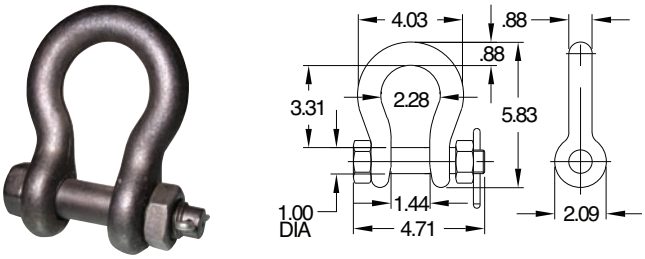

FORGED ANCHOR SHACKLE

PART NO.	LIFTING-SYSTEM LOAD RATING (LBS)	NOMINAL SHACKLE SIZE	LIFTING-SYSTEM PIN OR BOLT DIA
CL-36551-FAS	10000	7/8	1.00

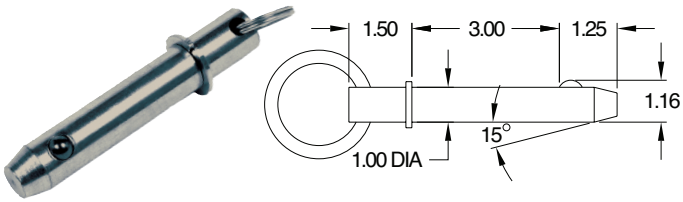

FAST-LOK™ DETENT PIN

PART NO.	LIFTING-SYSTEM LOAD RATING (LBS)	LIFTING-SYSTEM PIN DIA
CL-36903-FLPS	10000	1.00

Carr Lane MANUFACTURING CO.
4200 Carr Lane Ct., P.O. Box 191970
St. Louis, Missouri 63119-7970 USA
Phone: 314-647-6200, FAX: 314-647-5736
Web Site: www.carrlane.com

(Rev. 4-08)

HEAVY-DUTY LIFTING EYES

ALLOY STEEL, HEAT TREATED, BLACK OXIDE FINISH, 100% MAGNAFLUX INSPECTED

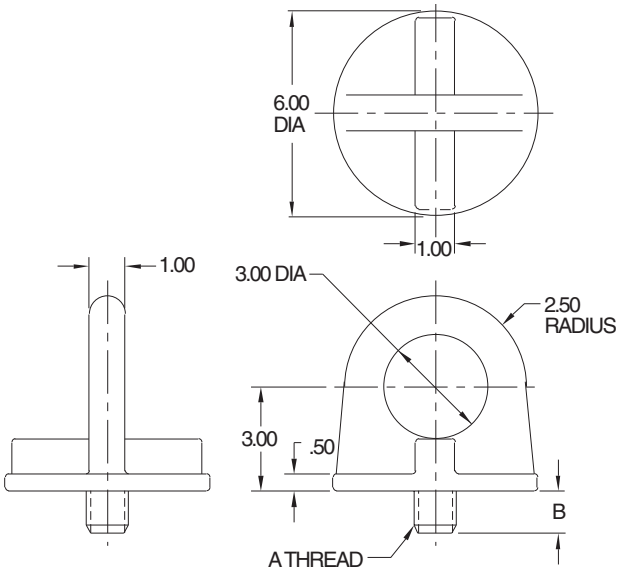

USA

Heavy-Duty Lifting Eyes have a short, large-diameter thread, making them ideal for lifting heavy plates. Designed for straight vertical lifting only. High-tensile alloy steel. Safety factor = 5:1. Black oxide finish is standard, with cadmium plating available as a special. Patent pending. See general Hoist Ring Safety Precautions on page 34.

PART NO.	VERTICAL LOAD RATING (LBS)	A	B
CL-36480-HDLE	10000	1"-8	1.00
CL-36481-HDLE		1" COIL	
CL-36482-HDLE		1-1/4"-7	
CL-36483-HDLE		1-1/4" COIL	
CL-36484-HDLE	15000	1-1/4"-7	1.50
CL-36485-HDLE		1-1/4" COIL	
CL-36486-HDLE		1-1/2"-6	
CL-36487-HDLE		1-1/2" COIL	

UNIVERSAL LIFTING RINGS

ALLOY STEEL, HEAT TREATED, BLACK OXIDE FINISH. 100% MAGNAFLUX INSPECTED

Removable hoist ring with a forged alloy-steel shackle. Each Universal Lifting Ring fits three different thread sizes. Designed for straight vertical lifting only. Patent no. 4,557,513. See general Hoist Ring Safety Precautions on page 34.

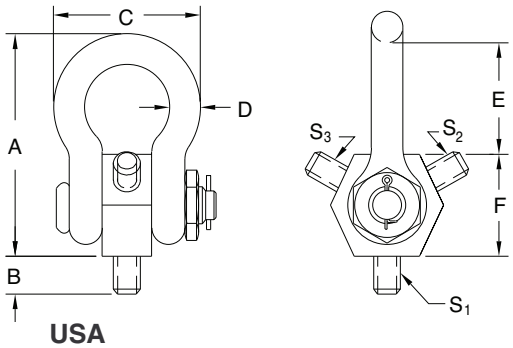

USA

PART NO.	SCREW SIZES		VERTICAL LOAD CAPACITY (LBS)	A	B	C	D	E	F
CL-34005-ULR	S1	1/4-20	400	3.06	.50	2.12	.44	1.25	1.38
	S2	5/16-18	800						
	S3	3/8-16	1400						
CL-34010-ULR	S1	1/2-13	2600	4.50	.75	3.00	.62	1.75	2.00
	S2	5/8-11	4000						
	S3	3/4-10	6000						

Carr Lane®
MANUFACTURING CO.
4200 Carr Lane Ct., P.O. Box 191970
St. Louis, Missouri 63119-7970 USA
Phone: 314-647-6200, FAX: 314-647-5736
Web Site: www.carrlane.com

(Rev. 4-08)

HOIST RING ACCESSORIES

Forged Anchor Shackles

High-strength forged alloy-steel anchor shackle. Supplied with thin-head bolt and nut with cotter pin. Meets Federal Specification RR-C 271D, Type IVA, Grade A, Class 3. Safety factor = 6:1. Heat treated with black oxide finish. See general Hoist Ring Safety Precautions on page 34.

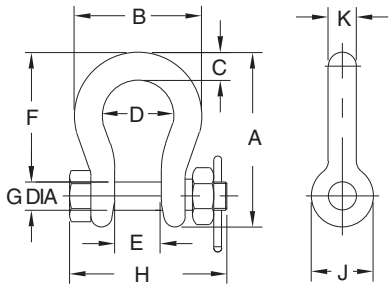

FORGED ANCHOR SHACKLES (USA)

PART NO.	LOAD RATING (LBS)	NOMINAL SHACKLE SIZE	A	B	C	D	E	F	G DIA	H	J	K
CL-36511-FAS	2000	3/8	2.49	1.78	.38	1.03	.66	1.44	.44	2.17	.91	3/8
CL-36521-FAS	3000	7/16	2.91	2.03	.44	1.16	.75	1.69	.50	2.51	1.06	7/16
CL-36531-FAS	4000	1/2	3.28	2.31	.50	1.31	.81	1.88	.63	2.80	1.19	1/2
CL-36541-FAS	6500	5/8	4.19	2.94	.69	1.69	1.06	2.38	.75	3.53	1.50	5/8
CL-36551-FAS	13000	7/8	5.83	4.03	.97	2.28	1.44	3.31	1.00	4.71	2.09	7/8
CL-36561-FAS	19000	1-1/8	7.47	5.16	1.25	2.91	1.81	4.25	1.25	5.09	2.69	1-1/8
CL-36571-FAS	24000	1-1/4	8.25	5.75	1.38	3.25	2.03	4.69	1.38	6.51	3.00	1-1/4

Forged Rings

High-strength weldless forged alloy-steel ring. Meets Federal Specification RR-C 271D, Type VI. Safety factor = 6:1. Heat treated with black oxide finish. The largest-size Forged Ring (49000 Lbs capacity) is oval shaped. See general Hoist Ring Safety Precautions on page 34.

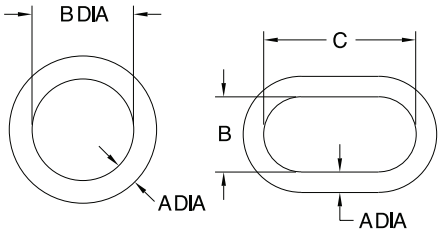

FORGED RINGS

PART NO.	LOAD RATING (LBS)	A DIA	B DIA	C
CL-36111-FR	3800	3/8	2	—
CL-36121-FR	6100	5/8	3	—
CL-36131-FR	18000	1	4	—
CL-36141-FR	30000	1-3/8	6	—
CL-36151-FR	49000	1-1/2	5-1/4	10-1/2

Hoist-Ring Clips

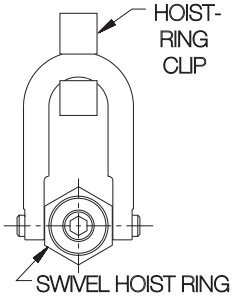

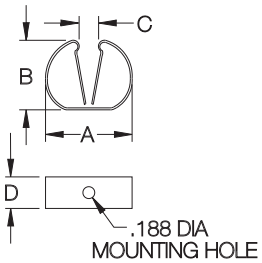

Handy holddown clip to keep Swivel Hoist Rings and Side-Pull Hoist Rings from rotating when not in use. Spring steel, zinc plated. Available in two sizes, one fitting ring diameters from 3/8" to 5/8", the other fitting ring diameters from 3/4" to 1-1/16".

HOIST-RING CLIPS

PART NO.	FITS RING DIAMETER	A	B	C	D
CL-1-HRC	3/8, 7/16, 5/8	1-3/8	15/16	5/16	1/2
CL-2-HRC	3/4, 1-1/16	1-5/8	1-1/4	3/4	5/8

MANUFACTURING CO.
4200 Carr Lane Ct., P.O. Box 191970
St. Louis, Missouri 63119-7970 USA
Phone: 314-647-6200, FAX: 314-647-5736
Web Site: www.carrlane.com

(Rev. 4-08x)

HOIST RING ACCESSORIES

Weld-In Threaded Inserts

Weld-In Threaded Inserts are ideal for installing hoist rings in road plates and other difficult-to-handle loads. These weld-in inserts provide an easier alternative to tapping large-diameter holes. High-tensile alloy steel. Install by cutting a hole in the plate and welding in place, flush with the surface. Weld around the entire perimeter of the base (certified welding). Welding instructions are included with each shipment. See general Hoist Ring Safety Precautions on page 34.

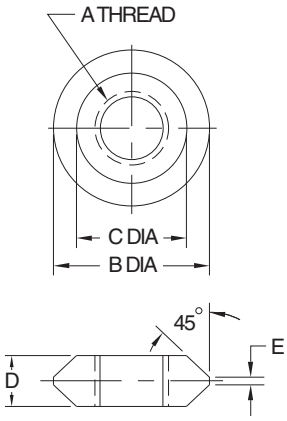

USA

PART NO.	THREAD TYPE	A	B DIA	C DIA	D	E
CL-36980-WTI	UNC	3/4-10	3	2-1/8	1	1/8
CL-36982-WTI	UNC	1"-8				
CL-36984-WTI	UNC	1-1/4"-7				
CL-36986-WTI	COIL	1-1/4" COIL				
CL-36988-WTI	ACME	1-1/4" ACME				
CL-36990-WTI	UNC	1-1/2"-6	3-1/2	2-3/8	1-1/2	3/8
CL-36992-WTI	COIL	1-1/2" COIL				
CL-36994-WTI	ACME	1-1/2" ACME				
CL-36996-WTI	UNC	2"-4-1/2				

Renewal Road Plates Round

Renewal Road Plates are ideal for repairing the center section of a road plate that has existing holes or slots from prior usage. These weld-in plates (G-50 steel) with an alloy-steel threaded insert provide an easier alternative to tapping large-diameter holes. Install by cutting a hole in the plate and welding in place, flush with the surface. Weld around the entire perimeter of the base (certified welding). Welding instructions are included with each shipment. See general Hoist Ring Safety Precautions on page 34.

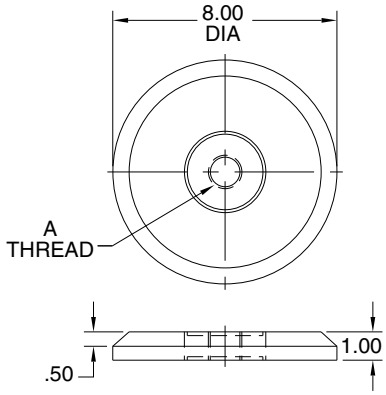

USA

PART NO. ROUND	THREAD TYPE	A
CL-36431-RRP	UNC	1-1/4"-7
CL-36430-RRP	COIL	1-1/4" COIL
CL-36451-RRP	UNC	1-1/2"-6
CL-36450-RRP	COIL	1-1/2" COIL

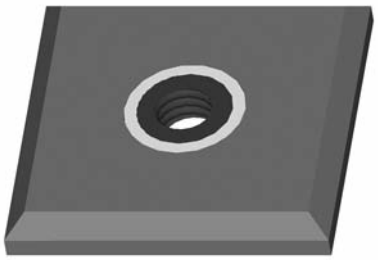

Renewal Road Plates Square

Same specifications as the round Renewal Road Plates shown above, except with a square shape.

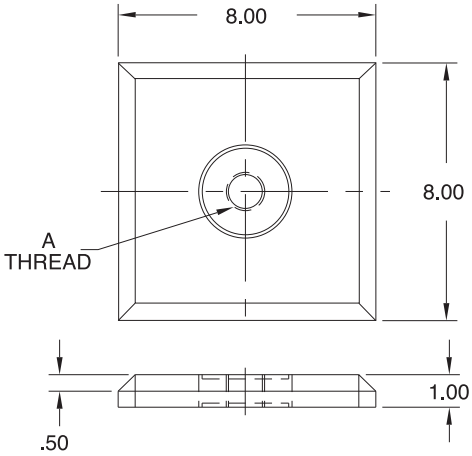

USA

PART NO. SQUARE	THREAD TYPE	A
CL-36426-RRP	UNC	1-1/4"-7
CL-36425-RRP	COIL	1-1/4" COIL
CL-36446-RRP	UNC	1-1/2"-6
CL-36445-RRP	COIL	1-1/2" COIL

Carr Lane®
MANUFACTURING CO.
4200 Carr Lane Ct., P.O. Box 191970
St. Louis, Missouri 63119-7970 USA
Phone: 314-647-6200, FAX: 314-647-5736
Web Site: www.carrlane.com

(Rev. 8-06)

PALM-GRIP HAND KNOBS

319 ALUMINUM ALLOY

1/2-13
5/8-11
M12
M16

Polished full-grip hand knob. Choose from two knob sizes, each available blank, tapped or reamed. Note: catalog photos are actual size.

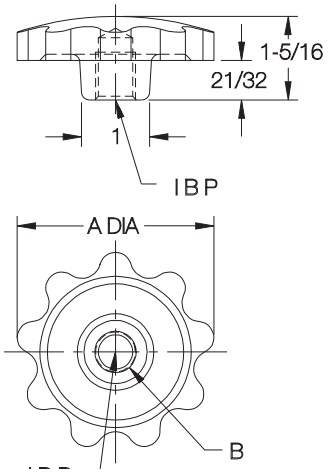

3/8-16
1/2-13
M10
M12

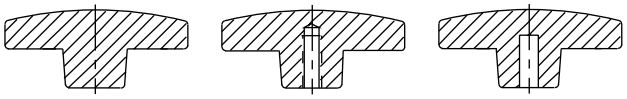

Blank **Tapped** **Reamed**

USA & METRIC

PART NO.	A DIA	HOLE TYPE	B
CL-11-PHK	2-3/4	BLANK	—
CL-13-PHK		TAPPED	3/8-16 X 3/4 DEEP
CL-14-PHK			1/2-13 X 3/4 DEEP
CLM-13-PHK			M10 X 3/4 DEEP
CLM-14-PHK			M12 X 3/4 DEEP
CL-12-PHK		REAMED	3/8 X 7/8 DEEP
CL-15-PHK			1/2 X 7/8 DEEP
CLM-12-PHK			10mm X 7/8 DEEP
CLM-15-PHK			12mm X 7/8 DEEP
CL-21-PHK	3-1/8	BLANK	—
CL-23-PHK		TAPPED	1/2-13 X 3/4 DEEP
CL-24-PHK			5/8-11 X 3/4 DEEP
CLM-23-PHK			M12 X 3/4 DEEP
CLM-24-PHK			M16 X 3/4 DEEP
CL-22-PHK		REAMED	1/2 X 7/8 DEEP
CL-25-PHK			5/8 X 1 DEEP
CLM-22-PHK			12mm X 7/8 DEEP
CLM-25-PHK			16mm X 1 DEEP

Carr Lane®
MANUFACTURING CO.
4200 Carr Lane Ct., P.O. Box 191970
St. Louis, Missouri 63119-7970 USA
Phone: 314-647-6200, FAX: 314-647-5736
Web Site: www.carrlane.com

(Rev.12-09)

FLUTED KNOBS

BLACK PHENOLIC PLASTIC OR THERMOPLASTIC
WITH BRASS INSERT

NOW ALSO AVAILABLE IN METRIC!

Phenolic — Tapped

1/2-13 CL-88-PFK
5/8-11 CL-810-PFK

Large easy-grip knob that is excellent for either fine-adjustment or high-torque applications. Molded-in brass insert provides superior thread strength. Choice of four knob sizes. Non-standard thread sizes, reamed holes, molded-in studs, or special colors are available in quantities of 250 and above. Note: Catalog photos are actual size.

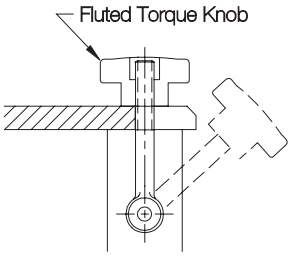

3/8-16 CL-66-PFK
1/2-13 CL-68-PFK
M12 CLM-612-PFK

1/4-20 CL-44-PFK
5/16-18 CL-45-PFK
3/8-16 CL-46-PFK
M8 CLM-48-PFK
M10 CLM-410-PFK

#10-32 CL-23-PFK
1/4-20 CL-24-PFK
5/16-18 CL-25-PFK
M6 CLM-26-PFK

Phenolic — Tapped Through Hole

3/8-16 CL-660-PFK

5/16-18 CL-450-PFK

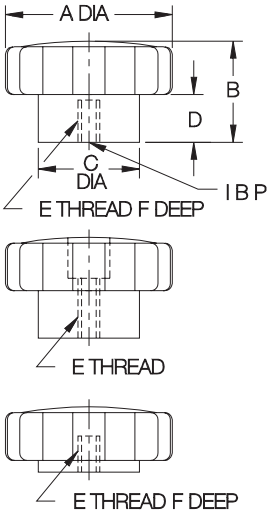

Phenolic — Tapped Short Hub

3/8-16 CL-666-PFK

3/8-16 CL-466-PFK

PHENOLIC — TAPPED (USA & METRIC)

PART NO.	A DIA	B	C DIA	D	E	F
CL-23-PFK	1-3/8	27/32	27/32	25/64	#10-32	5/16
CL-24-PFK					1/4-20	7/16
CL-25-PFK					5/16-18	
CLM-26-PFK					M6	
CL-44-PFK	1-3/4	1-1/16	1-1/16	1/2	1/4-20	
CL-45-PFK					5/16-18	
CL-46-PFK					3/8-16	1/2
CLM-48-PFK					M8	7/16
CLM-410-PFK					M10	1/2
CL-66-PFK	2-3/8	1-5/16	1-1/4	5/8	3/8-16	
CL-68-PFK					1/2-13	
CLM-612-PFK					M12	5/8
CL-88-PFK	3-1/4	1-25/32	2	7/8	1/2-13	
CL-810-PFK					5/8-11	3/4

PHENOLIC — TAPPED THROUGH HOLE (USA)

CL-450-PFK	1-3/4	61/64	1-1/16	1/2	5/16-18	5/8
CL-660-PFK	2-3/8	1-9/32	1-1/4	5/8	3/8-16	5/8

PHENOLIC — TAPPED, SHORT HUB (USA)

CL-466-PFK	1-3/4	11/16	3/4	1/8	3/8-16	3/8
CL-666-PFK	2-3/8	13/16	3/4	1/8	3/8-16	1/2

Carr Lane®
MANUFACTURING CO.
4200 Carr Lane Ct., P.O. Box 191970
St. Louis, Missouri 63119-7970 USA
Phone: 314-647-6200, FAX: 314-647-5736
Web Site: www.carrlane.com

(Rev. 7-03)

FLUTED KNOBS

BLACK THERMOPLASTIC OR PHENOLIC PLASTIC WITH BRASS INSERT

Thermoplastic — Tapped

5/16-18 CL-750-PFK
3/8-16 CL-760-PFK

Thermoplastic version of the Fluted Knobs on page 62, with a textured non-slip, non-glare finish. Choice of three knob sizes. Molded-in brass insert provides superior thread strength. Non-standard thread sizes, reamed holes, molded-in studs, or special colors are available in quantities of 250 and above. Note: Catalog photos are actual size.

5/16-18 CL-550-PFK
3/8-16 CL-560-PFK

1/4-20 CL-340-PFK
5/16-18 CL-350-PFK

Thermoplastic — Tapped Through Hole

5/16-18 CL-551-PFK
3/8-16 CL-561-PFK

1/4-20 CL-341-PFK
5/16-18 CL-351-PFK

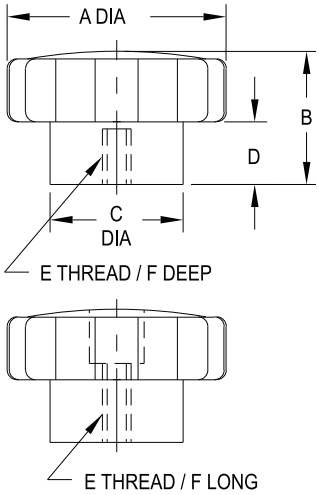

THERMOPLASTIC — TAPPED

PART NO.	A DIA	B	C DIA	D	E	F
CL-340-PFK	1-1/2	1	3/4	3/8	1/4-20	5/8
CL-350-PFK					5/16-18	
CL-550-PFK	2-5/32	1-1/8	3/4	3/8	5/16-18	3/4
CL-560-PFK					3/8-16	
CL-750-PFK	3-1/4	1-5/8	2	3/4	5/16-18	3/4
CL-760-PFK					3/8-16	7/8

THERMOPLASTIC — TAPPED THROUGH HOLE

CL-341-PFK	1-1/2	1	3/4	3/8	1/4-20	5/8
CL-351-PFK					5/16-18	
CL-551-PFK	2-5/32	1-1/8	3/4	3/8	5/16-18	7/8
CL-561-PFK					3/8-16	

CarrLane®
MANUFACTURING CO.
4200 Carr Lane Ct., P.O. Box 191970
St. Louis, Missouri 63119-7970 USA
Phone: 314-647-6200, FAX: 314-647-5736
Web Site: www.carrlane.com

(Rev. 8-03)

STAR KNOBS

BLACK THERMOPLASTIC OR CUSHION-GRIP PLASTIC
WITH BRASS INSERT

Thermoplastic — Tapped

1/4-20 CL-632-SK
5/16-18 CL-642-SK
3/8-16 CL-652-SK

Thermoplastic — Tapped Through Hole

1/4-20 CL-636-SK
5/16-18 CL-646-SK
3/8-16 CL-656-SK

Star Knobs have five lobes to provide a firm, sure grip for applications requiring quick tightening and high torque. Smooth, rounded lobes prevent snagging. Thermoplastic version has a textured, non-slip, non-glare finish. Cushion-Grip version is made from a unique material that feels soft to the touch, comfortable yet rugged. Molded-in brass insert provides superior thread strength. Non-standard thread sizes, reamed holes, molded-in studs, or special colors are available in quanitities of 250 and above. Note: Catalog photos are actual size.

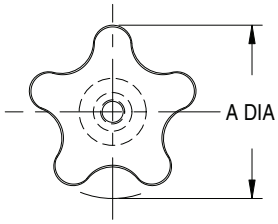

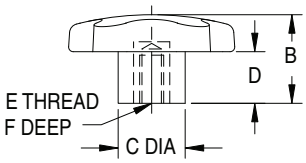

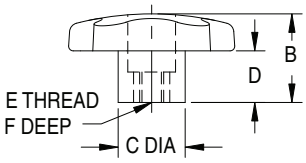

Cushion Grip — Tapped

5/16-18 CL-755-SK
3/8-16 CL-765-SK

1/4-20 CL-545-SK
5/16-18 CL-555-SK
3/8-16 CL-565-SK

1/4-20 CL-345-SK
5/16-18 CL-355-SK

THERMOPLASTIC — TAPPED

PART NO.	A DIA	B	C DIA	D	E	F
CL-632-SK	2-1/4	1	7/8	1/2	1/4-20	1/2
CL-642-SK					5/16-18	5/8
CL-652-SK					3/8-16	1/2

THERMOPLASTIC — TAPPED THROUGH HOLE

PART NO.	A DIA	B	C DIA	D	E	F
CL-636-SK	2-1/4	1	7/8	1/2	1/4-20	5/8
CL-646-SK					5/16-18	
CL-656-SK					3/8-16	

CUSHION GRIP — TAPPED

PART NO.	A DIA	B	C DIA	D	E	F
CL-345-SK	1-1/2	1-3/32	11/16	15/64	1/4-20	5/8
CL-355-SK					5/16-18	
CL-545-SK	2	1-3/8	3/4	33/64	1/4-20	5/8
CL-555-SK					5/16-18	
CL-565-SK					3/8-16	
CL-755-SK	2-3/8	1-5/8	3/4	11/16	5/16-18	5/8
CL-765-SK					3/8-16	

CarrLane®
MANUFACTURING CO.
4200 Carr Lane Ct., P.O. Box 191970
St. Louis, Missouri 63119-7970 USA
Phone: 314-647-6200, FAX: 314-647-5736
Web Site: www.carrlane.com

(Rev. 7-06)

HAND KNOBS

CAST IRON, ZINC PLATED CLEAR CHROMATE
OR 319 ALUMINUM ALLOY

Classic easy-to-grip clamping knob, available in cast iron or aluminum. Choose from five knob sizes, each available blank, tapped, tapped through, or reamed. Note: catalog photos are actual size.

5/8-11
3/4-10
M16
M20

1/2-13
5/8-11
M12
M16

3/8-16
1/2-13
M10
M12

1/4-20
5/16-18
M6
M8

1/4-20
M6

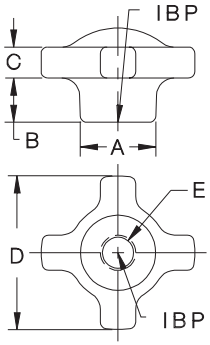

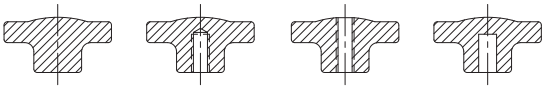

Blank **Tapped** **Tapped Through** **Reamed**

USA & METRIC

PART NO. CAST IRON	PART NO. ALUMINUM	A DIA	B	C	D	HOLE TYPE	E
CL-85-HK-8	CL-85-HK-8A	9/16	5/16	5/16	1-1/8	BLANK	—
CL-80-HK-8	CL-80-HK-8A					TAPPED	1/4-20 x 1/2 DEEP
CLM-80-HK-8	CLM-80-HK-8A						M6 x 1/2 DEEP
CL-8-HK-8	CL-8-HK-8A					TAPPED THROUGH	1/4-20
CLM-8-HK-8	CLM-8-HK-8A						M6
CL-28-HK-8	CL-28-HK-8A					REAMED	1/4 x 1/2 DEEP
CLM-28-HK-8	CLM-28-HK-8A						6mm x 1/2 DEEP
CL-25-HK-2	CL-25-HK-2A	3/4	1/2	3/8	1-3/4	BLANK	—
CL-10-HK-2	CL-10-HK-2A					TAPPED	1/4-20 x 7/8 DEEP
CL-20-HK-2	CL-20-HK-2A						5/16-18 x 7/8 DEEP
CLM-10-HK-2	CLM-10-HK-2A						M6 x 7/8 DEEP
CLM-20-HK-2	CLM-20-HK-2A						M8 x 7/8 DEEP
CL-1-HK-2	CL-1-HK-2A					TAPPED THROUGH	1/4-20
CL-2-HK-2	CL-2-HK-2A						5/16-18
CLM-1-HK-2	CLM-1-HK-2A						M6
CLM-2-HK-2	CLM-2-HK-2A						M8
CL-21-HK-2	CL-21-HK-2A					REAMED	1/4 x 7/8 DEEP
CL-22-HK-2	CL-22-HK-2A						5/16 x 7/8 DEEP
CLM-21-HK-2	CLM-21-HK-2A						6mm x 7/8 DEEP
CLM-22-HK-2	CLM-22-HK-2A						8mm x 7/8 DEEP
CL-45-HK-4	CL-45-HK-4A	1	5/8	7/16	2-1/8	BLANK	—
CL-30-HK-4	CL-30-HK-4A					TAPPED	3/8-16 x 1 DEEP
CL-40-HK-4	CL-40-HK-4A						1/2-13 x 1 DEEP
CLM-30-HK-4	CLM-30-HK-4A						M10 x 1 DEEP
CLM-40-HK-4	CLM-40-HK-4A						M12 x 1 DEEP
CL-3-HK-4	CL-3-HK-4A					TAPPED THROUGH	3/8-16
CL-4-HK-4	CL-4-HK-4A						1/2-13
CLM-3-HK-4	CLM-3-HK-4A						M10
CLM-4-HK-4	CLM-4-HK-4A						M12
CL-23-HK-4	CL-23-HK-4A					REAMED	3/8 x 1 DEEP
CL-24-HK-4	CL-24-HK-4A						1/2 x 1 DEEP
CLM-23-HK-4	CLM-23-HK-4A						10mm x 1 DEEP
CLM-24-HK-4	CLM-24-HK-4A						12mm x 1 DEEP
CL-105-HK-10	CL-105-HK-10A	1-1/8	1	1/2	2-1/2	BLANK	—
CL-90-HK-9	CL-90-HK-9A					TAPPED	1/2-13 x 1-1/4 DEEP
CL-100-HK-10	CL-100-HK-10A						5/8-11 x 1-1/4 DEEP
CLM-90-HK-9	CLM-90-HK-9A						M12 x 1-1/4 DEEP
CLM-100-HK-10	CLM-100-HK-10A						M16 x 1-1/4 DEEP
CL-9-HK-9	CL-9-HK-9A					TAPPED THROUGH	1/2-13
CL-10-HK-10	CL-10-HK-10A						5/8-11
CLM-9-HK-9	CLM-9-HK-9A						M12
CLM-10-HK-10	CLM-10-HK-10A						M16
CL-29-HK-9	CL-29-HK-9A					REAMED	1/2 x 1-1/4 DEEP
CL-31-HK-10	CL-31-HK-10A						5/8 x 1-1/4 DEEP
CLM-29-HK-9	CLM-29-HK-9A						12mm x 1-1/4 DEEP
CLM-31-HK-10	CLM-31-HK-10A						16mm x 1-1/4 DEEP
CL-65-HK-6	CL-65-HK-6A	1-3/8	3/4	1/2	2-3/4	BLANK	—
CL-50-HK-6	CL-50-HK-6A					TAPPED	5/8-11 x 1-1/8 DEEP
CL-60-HK-6	CL-60-HK-6A						3/4-10 x 1-1/8 DEEP
CLM-50-HK-6	CLM-50-HK-6A						M16 x 1-1/8 DEEP
CLM-60-HK-6	CLM-60-HK-6A						M20 x 1-1/8 DEEP
CL-5-HK-6	CL-5-HK-6A					TAPPED THROUGH	5/8-11
CL-6-HK-6	CL-6-HK-6A						3/4-10
CLM-5-HK-6	CLM-5-HK-6A						M16
CLM-6-HK-6	CLM-6-HK-6A						M20
CL-25-HK-6	CL-25-HK-6A					REAMED	5/8 x 1-1/8 DEEP
CL-26-HK-6	CL-26-HK-6A						3/4 x 1-1/8 DEEP
CLM-25-HK-6	CLM-25-HK-6A						16mm x 1-1/8 DEEP
CLM-26-HK-6	CLM-26-HK-6A						20mm x 1-1/8 DEEP

Carr Lane MANUFACTURING CO.
4200 Carr Lane Ct., P.O. Box 191970
St. Louis, Missouri 63119-7970 USA
Phone: 314-647-6200, FAX: 314-647-5736
Web Site: www.carrlane.com

(Rev. 7-10)

HAND KNOB ASSEMBLIES

KNOB: 319 ALUMINUM ALLOY
SCREW: 12L14 STEEL, BLACK OXIDE FINISH

Hand knob with a clamping screw cast securely in place. Four-prong design provides a firm grip for applications requiring quick tightening and high torque. Choice of three knob sizes. Available in thread sizes from 1/4-20 to 3/4-10 (M6 to M20 in metric), most in a choice of several thread lengths. See page 59 for additional hand-knob dimensions.

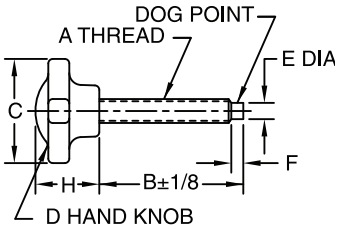

USA

PART NO.	A	B	C	D	E DIA	F	H
CL-1-HK2T	1/4-20	1	1-3/4	CL-25-HK-2A	.15	.12	1-1/8
CL-2-HK2T		1-1/2					
CL-2A-HK2T		2					
CL-2B-HK2T		3					
CL-3A-HK2T	5/16-18	1			.20	.16	
CL-3-HK2T		1-3/4					
CL-4-HK2T		2-1/2					
CL-4A-HK2T		3					
CL-5A-HK4T	3/8-16	1	2-1/8	CL-45-HK-4A	.25	.19	1-3/8
CL-5B-HK4T		1-1/2					
CL-5-HK4T		2					
CL-6-HK4T		2-1/2					
CL-6A-HK4T		3					
CL-7A-HK4T	1/2-13	1			.34	.25	
CL-7B-HK4T		1-1/2					
CL-7C-HK4T		2					
CL-7-HK4T		2-1/2					
CL-8-HK4T		3					
CL-9-HK6T	5/8-11	1-3/4	2-3/4	CL-65-HK-6A	.46	.31	1-1/2
CL-10-HK6T		3					
CL-12-HK6T	3/4-10	3			.56	.38	

METRIC

PART NO.	A	B	C	D	E DIA	F	H
CLM-1-HK2T	M6	.98	1-3/4	CL-25-HK-2A	.17	.13	1-1/8
CLM-2-HK2T		1.57					
CLM-3A-HK2T	M8	.98			.23	.18	
CLM-3-HK2T		1.77					
CLM-4-HK2T		2.56					
CLM-5A-HK4T	M10	.98	2-1/8	CL-45-HK-4A	.27	.19	1-3/8
CLM-5B-HK4T		1.57					
CLM-5-HK4T		1.97					
CLM-6-HK4T		2.56					
CLM-7A-HK4T	M12	.98			.35	.25	
CLM-7B-HK4T		1.57					
CLM-7C-HK4T		1.97					
CLM-7-HK4T		2.56					
CLM-8-HK4T		2.95					
CLM-9-HK6T	M16	1.77	2-3/4	CL-65-HK-6A	.47	.32	1-1/2
CLM-10-HK6T		2.95					
CLM-12-HK6T	M20	2.95			.59	.31	

SWIVEL HAND KNOB ASSEMBLIES

NEW!

KNOB: 319 ALUMINUM ALLOY
SCREW: 12L14 STEEL, BLACK OXIDE FINISH.
WASHER: MILD STEEL

Hand-knob assembly with a captive, freely rotating washer to prevent marring in clamping applications. Four-prong design provides a firm grip for applications requiring quick tightening and high torque. Plain-end screw with no dogpoint. Choice of three knob sizes. Available in thread sizes from 1/4-20 to 3/4-10 (M6 to M20 in metric), most in a choice of several thread lengths. See page 59 for additional hand-knob dimensions.

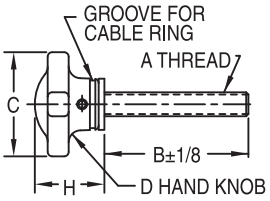

USA

PART NO.	A	B	C	D	H
CL-1-SHK2T	1/4-20	1	1-3/4	CL-25-HK-2A	1.33
CL-2-SHK2T		1-1/2			
CL-2A-SHK2T		2			
CL-2B-SHK2T		3			
CL-3A-SHK2T	5/16-18	1			1.34
CL-3-SHK2T		1-3/4			
CL-4-SHK2T		2-1/2			
CL-4A-SHK2T		3			
CL-5A-SHK4T	3/8-16	1	2-1/8	CL-45-HK-4A	1.47
CL-5B-SHK4T		1-1/2			
CL-5-SHK4T		2			
CL-6-SHK4T		2-1/2			
CL-6A-SHK4T		3			
CL-7A-SHK4T	1/2-13	1			1.53
CL-7B-SHK4T		1-1/2			
CL-7C-SHK4T		2			
CL-7-SHK4T		2-1/2			
CL-8-SHK4T		3			
CL-9-SHK6T	5/8-11	1-3/4	2-3/4	CL-65-HK-6A	1.66
CL-10-SHK6T		3			
CL-12-SHK6T	3/4-10	3			1.77

METRIC

PART NO.	A	B	C	D	H
CLM-1-SHK2T	M6	.98	1-3/4	CL-25-HK-2A	1.33
CLM-2-SHK2T		1.57			
CLM-3A-SHK2T	M8	.98			1.34
CLM-3-SHK2T		1.77			
CLM-4-SHK2T		2.56			
CLM-5A-SHK4T	M10	.98	2-1/8	CL-45-HK-4A	1.47
CLM-5B-SHK4T		1.57			
CLM-5-SHK4T		1.97			
CLM-6-SHK4T		2.56			
CLM-7A-SHK4T	M12	.98			1.53
CLM-7B-SHK4T		1.57			
CLM-7C-SHK4T		1.97			
CLM-7-SHK4T		2.56			
CLM-8-SHK4T		2.95			
CLM-9-SHK6T	M16	1.77	2-3/4	CL-65-HK-6A	1.66
CLM-10-SHK6T		2.95			
CLM-12-SHK6T	M20	2.95			1.77

Carr Lane®
MANUFACTURING CO.
4200 Carr Lane Ct., P.O. Box 191970
St. Louis, Missouri 63119-7970 USA
Phone: 314-647-6200, FAX: 314-647-5736
Web Site: www.carrlane.com

(Rev. 7-10)

KNOB SHOE ASSEMBLIES

KNOB: 319 ALUMINUM ALLOY
SCREW: 12L14 STEEL, BLACK OXIDE FINISH
FOOT: 12L14 STEEL, BLACK OXIDE FINISH (OR DELRIN®)

Hand knob assembly with a removable swivel foot. Clamping screw is cast securely in the knob. Four-prong design provides a firm grip for applications requiring quick tightening and high torque. Choice of four knob sizes. Available in thread sizes from 1/4-20 to 3/4-10 (M6 to M20 in metric), most in a choice of several thread lengths. See page 59 for additional hand-knob dimensions.

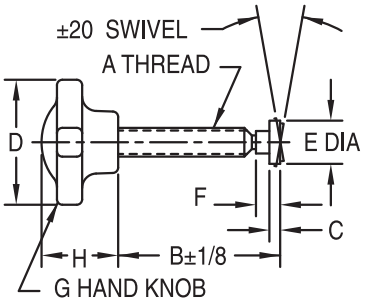

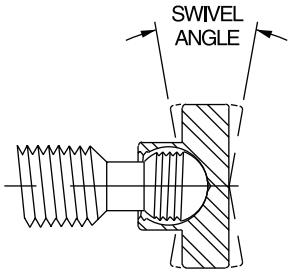

Knob Shoe Assemblies use our patented left-hand-thread swivel-foot system. The ball end of the body screws into the foot for easy installation and removal. Once the ball threads pass beyond the foot threads, the foot can rotate and pivot freely (20° total angle). Foot threads are left-hand to positively prevent accidental backout during use. Delrin® feet are optional. To order with a Delrin® foot, add "N" to the part number, e.g. CL-1-KSAN. Note: Delrin® feet are not threaded – they snap on and off. For other foot types, see Feet for Swivel Screws on page 77 (order separately).

USA

PART NO.	A	B	C	D	E DIA	F	G	H
CL-1-KSA	1/4-20	1-1/4	1/8	1-1/8	3/8	5/16	CL-85-HK-8A	7/8
CL-2-KSA		2						
CL-2A-KSA	1/4-20	2	1/8	1-3/4	3/8	5/16	CL-25-HK-2A	1-1/8
CL-3-KSA	5/16-18	1-1/2	5/32	1-3/4	1/2	11/32	CL-25-HK-2A	1-1/8
CL-4-KSA		2-1/4						
CL-4A-KSA		2-3/4						
CL-5-KSA	3/8-16	2-1/16	3/16	2-1/8	9/16	7/16	CL-45-HK-4A	1-3/8
CL-6-KSA		2-13/16						
CL-7-KSA		3-9/16						
CL-8-KSA	1/2-13	2-13/16			3/4	27/64		
CL-9-KSA		3-9/16						
CL-10-KSA		4-5/16						
CL-11-KSA	5/8-11	3-5/16	7/32	2-3/4	15/16	33/64	CL-65-HK-6A	1-1/2
CL-13-KSA		4-13/16						
CL-14-KSA	3/4-10	3-5/16						
CL-16-KSA		4-13/16						

METRIC

PART NO.	A	B	C	D	E DIA	F	G	H
CLM-1-KSA	M6	.98	1/8	1-1/8	3/8	5/16	CL-85-HK-8A	7/8
CLM-2-KSA		1.97						
CLM-3-KSA	M8	1.57	5/32	1-3/4	1/2	11/32	CL-25-HK-2A	1-1/8
CLM-4-KSA		2.36						
CLM-5-KSA	M10	1.97	3/16	2-1/8	9/16	7/16	CL-45-HK-4A	1-3/8
CLM-6-KSA		3.54						
CLM-7-KSA	M12	2.76			3/4	27/64		
CLM-8-KSA		4.33						
CLM-9-KSA	M16	3.15	7/32	2-3/4	15/16	33/64	CL-65-HK-6A	1-1/2
CLM-10-KSA		4.72						

CarrLane®
MANUFACTURING CO.
4200 Carr Lane Ct., P.O. Box 191970
St. Louis, Missouri 63119-7970 USA
Phone: 314-647-6200, FAX: 314-647-5736
Web Site: www.carrlane.com

(Rev. 4-07)

FOUR-PRONG KNOBS

KNOB: BLACK PHENOLIC PLASTIC WITH BRASS INSERT
STUD: MILD STEEL, ZINC PLATED CLEAR CHROMATE

Phenolic —Tapped

5/16-18	CL-20-PPK-4
3/8-16	CL-30-PPK-4
1/2-13	CL-40-PPK-4
M10	CLM-10-PPK-4

1/4-20	CL-10-PPK-2
5/16-18	CL-20-PPK-2
3/8-16	CL-30-PPK-2
M8	CLM-8-PPK-2

#10-24	CL-10B-PPK-1
#10-32	CL-10A-PPK-1
1/4-20	CL-10-PPK-1
5/16-18	CL-20-PPK-1
M6	CLM-6-PPK-1

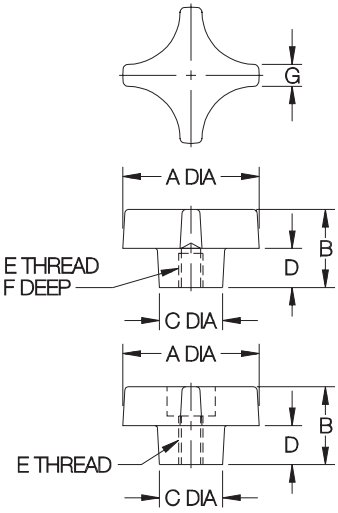

Phenolic —Tapped Through Hole

5/16-18	CL-2-PPK-4
3/8-16	CL-3-PPK-4
1/2-13	CL-4-PPK-4

1/4-20	CL-1-PPK-2
5/16-18	CL-2-PPK-2
3/8-16	CL-3-PPK-2

#10-24	CL-1B-PPK-1
#10-32	CL-1A-PPK-1
1/4-20	CL-1-PPK-1

NOW ALSO AVAILABLE IN METRIC!

Four-prong design provides a strong grip for clamping and other applications requiring quick tightening and high torque. Choice of three knob sizes. Molded-in brass insert provides superior thread strength. Also available with a molded-in clamping stud (page 63). Note: Catalog photos are actual size.

PHENOLIC — TAPPED (USA & METRIC)

PART NO.	A	B	C DIA	D	E	F	G
CL-10B-PPK-1	1-1/4	7/8	5/8	3/8	#10-24	5/16	1/4
CL-10A-PPK-1					#10-32		
CL-10-PPK-1					1/4-20	7/16	
CL-20-PPK-1					5/16-18		
CLM-6-PPK-1					M6		
CL-10-PPK-2	1-3/4	1	13/16	1/2	1/4-20		9/32
CL-20-PPK-2					5/16-18		
CL-30-PPK-2					3/8-16	1/2	
CLM-8-PPK-2					M8		
CL-20-PPK-4	2-1/4	1-1/8	1	9/16	5/16-18	7/16	5/16
CL-30-PPK-4					3/8-16	1/2	
CL-40-PPK-4					1/2-13	5/8	
CLM-10-PPK-4					M10		

PHENOLIC — TAPPED THROUGH HOLE (USA)

CL-1B-PPK-1	1-1/4	7/8	5/8	3/8	#10-24	5/16	1/4
CL-1A-PPK-1					#10-32		
CL-1-PPK-1					1/4-20	1/2	
CL-1-PPK-2	1-3/4	1	13/16	1/2	1/4-20	5/8	9/32
CL-2-PPK-2					5/16-18		
CL-3-PPK-2					3/8-16		
CL-2-PPK-4	2-1/4	1-1/8	1	9/16	5/16-18	5/8	5/16
CL-3-PPK-4					3/8-16		
CL-4-PPK-4					1/2-13		

Carr Lane®
MANUFACTURING CO.
4200 Carr Lane Ct., P.O. Box 191970
St. Louis, Missouri 63119-7970 USA
Phone: 314-647-6200, FAX: 314-647-5736
Web Site: www.carrlane.com

(Rev. 5-07)

FOUR-PRONG KNOBS

3/8-16 x 1 CL-5A-PPK4T
3/8-16 x 1-1/2 CL-5B-PPK4T
3/8-16 x 2 CL-5-PPK4T
3/8-16 x 2-1/2 CL-6-PPK4T
1/2-13 x 1-1/2 CL-7B-PPK4T
1/2-13 x 2 CL-7C-PPK4T
1/2-13 x 2-1/2 CL-7-PPK4T
M10 x 40mm CLM-1040-PPK4T

1/4-20 x 1 CL-1-PPK2T
5/16-18 x 1 CL-3A-PPK2T
5/16-18 x 1-1/2 CL-4A-PPK2T
5/16-18 x 2 CL-4B-PPK2T
M8 x 30mm CLM-830-PPK-2T

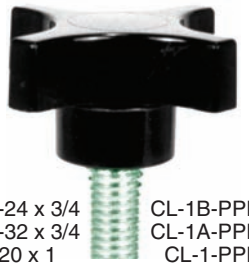

#10-24 x 3/4 CL-1B-PPK1T
#10-32 x 3/4 CL-1A-PPK1T
1/4-20 x 1 CL-1-PPK1T
M6 x 20mm CLM-620-PPK1T

NOW ALSO AVAILABLE IN METRIC!

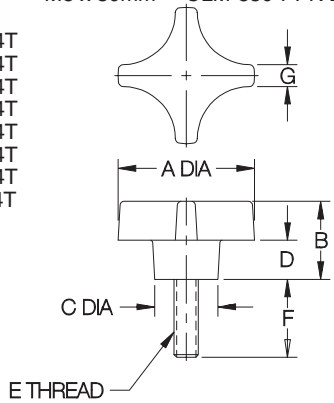

PHENOLIC — STUD TYPE (USA & METRIC)

PART NO.	A	B	C DIA	D	E	F	G
CL-1B-PPK1T	1-1/4	7/8	5/8	3/8	#10-24	3/4	1/4
CL-1A-PPK1T					#10-32	3/4	
CL-1-PPK1T					1/4-20	1	
CLM-620-PPK1T					M6	.79	
CL-1-PPK2T	1-3/4	1	13/16	1/2	1/4-20	1	9/32
CL-3A-PPK2T					5/16-18	1	
CL-4A-PPK2T						1-1/2	
CL-4B-PPK2T						2	
CLM-830-PPK2T					M8	1.18	
CL-5A-PPK4T	2-1/4	1-1/8	1	9/16	3/8-16	1	5/16
CL-5B-PPK4T						1-1/2	
CL-5-PPK4T						2	
CL-6-PPK4T						2-1/2	
CL-7B-PPK4T					1/2-13	1-1/2	
CL-7C-PPK4T						2	
CL-7-PPK4T						2-1/2	
CLM-1040-PPK4T					M10	1.57	

FOUR-PRONG KNOBS

BLACK THERMOPLASTIC WITH BRASS INSERT

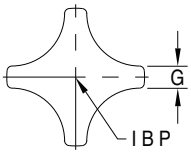

Thermoplastic — Tapped

Four-prong design in thermoplastic, with a textured non-slip, non-glare finish. Molded-in brass insert provides superior thread strength. Non-standard thread sizes, reamed holes, molded-in studs, or special colors are available in quantities of 250 and above. Note: Catalog photos are actual size.

5/16-18 CL-850-PPK
3/8-16 CL-860-PPK

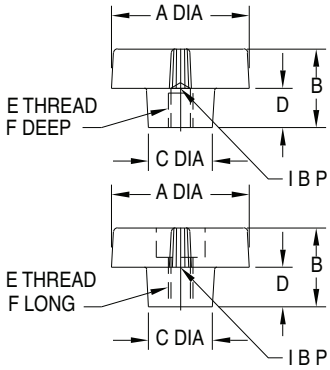

Thermoplastic — Tapped Through Hole

5/16-18 CL-851-PPK
3/8-16 CL-861-PPK

THERMOPLASTIC — TAPPED (USA)

PART NO.	A	B	C DIA	D	E	F	G
CL-850-PPK	3	1-1/4	7/8	9/16	5/16-18	5/8	1/2
CL-860-PPK					3/8-16		

THERMOPLASTIC — TAPPED THROUGH HOLE (USA)

CL-851-PPK	3	1-1/4	7/8	9/16	5/16-18	5/8	1/2
CL-861-PPK					3/8-16		

Carr Lane®
MANUFACTURING CO.
4200 Carr Lane Ct., P.O. Box 191970
St. Louis, Missouri 63119-7970 USA
Phone: 314-647-6200, FAX: 314-647-5736
Web Site: www.carrlane.com

(Rev. 7-06)

HAND KNOBS
STAINLESS STEEL

300-SERIES STAINLESS STEEL

NOW ALSO AVAILABLE IN METRIC!

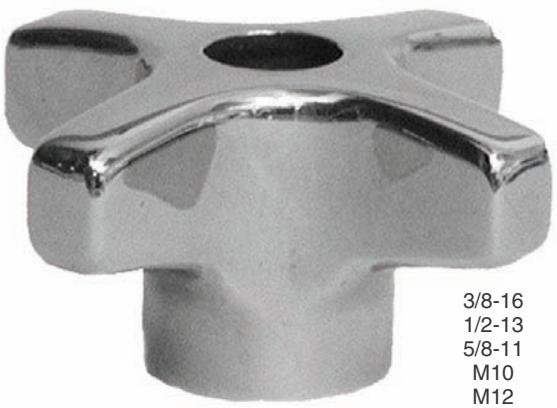

3/8-16
1/2-13
5/8-11
M10
M12
M16

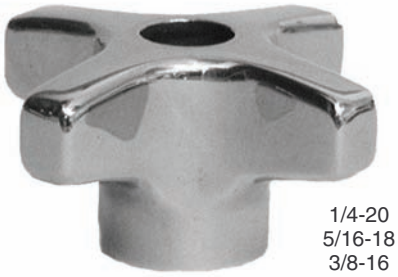

1/4-20
5/16-18
3/8-16
M6
M8
M10

High-quality, stainless steel knob with a beautiful polished finish. Four-prong design provides a firm grip for applications requiring quick tightening and high torque. Choose from two knob sizes, each available blank, tapped, tapped through, or reamed. Note: Catalog photos are actual size.

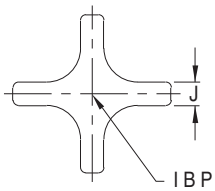

Blank

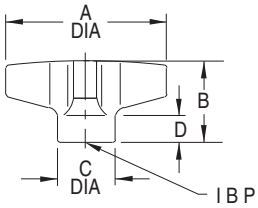

Tapped

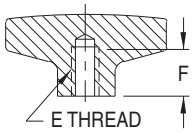

Tapped Through Hole

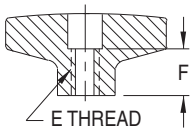

Reamed

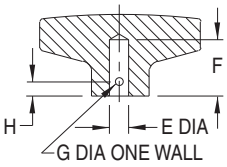

USA & METRIC

PART NO.	A DIA	B	C DIA	D	HOLE TYPE	E	F	G	H	J
CL-200-HK-S	2	1.02	.78	.34	BLANK	—	—	—	—	.33
CL-240-HK-S					TAPPED	1/4-20	11/16	—	—	
CL-250-HK-S						5/16-18				
CL-260-HK-S						3/8-16				
CLM-260-HK-S						M6				
CLM-280-HK-S						M8				
CLM-2100-HK-S						M10				
CL-241-HK-S					TAPPED THROUGH	1/4-20	1/2	—	—	
CL-251-HK-S						5/16-18	5/8			
CL-261-HK-S						3/8-16	3/4			
CLM-261-HK-S						M6	1/2			
CLM-281-HK-S						M8	5/8			
CLM-2101-HK-S						M10	3/4			
CL-255-HK-S					REAMED	5/16	11/16	1/8	3/16	
CL-265-HK-S						3/8		5/32		
CL-600-HK-S	3	1.50	1.14	.50	BLANK	—	—	—	—	.47
CL-660-HK-S					TAPPED	3/8-16	1	—	—	
CL-680-HK-S						1/2-13				
CL-6100-HK-S						5/8-11				
CLM-6100-HK-S						M10				
CLM-6120-HK-S						M12				
CLM-6160-HK-S						M16				
CL-661-HK-S					TAPPED THROUGH	3/8-16	3/4	—	—	
CL-681-HK-S						1/2-13	1			
CL-6101-HK-S						5/8-11	1-1/4			
CLM-6101-HK-S						M10	1			
CLM-6121-HK-S						M12				
CLM-6161-HK-S						M16				
CL-665-HK-S					REAMED	3/8	1	5/32	1/4	
CL-685-HK-S						1/2		3/16		

Carr Lane®
MANUFACTURING CO.
4200 Carr Lane Ct., P.O. Box 191970
St. Louis, Missouri 63119-7970 USA
Phone: 314-647-6200, FAX: 314-647-5736
Web Site: www.carrlane.com

(Rev. 10-06)

THREE-PRONG KNOBS

BLACK THERMOPLASTIC WITH BRASS INSERT

Thermoplastic — Tapped

5/16-18 CL-850-TPK
3/8-16 CL-860-TPK

1/4-20 CL-640-TPK
5/16-18 CL-650-TPK
3/8-16 CL-660-TPK

1/4-20 CL-440-TPK
5/16-18 CL-450-TPK

5/16-18 CL-851-TPK
3/8-16 CL-861-TPK

Thermoplastic — Tapped Through Hole

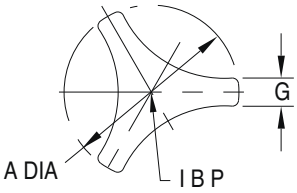

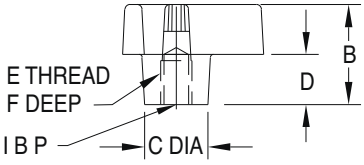

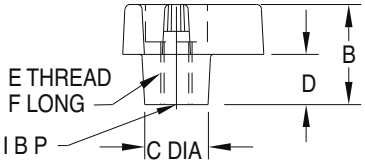

Modern three-prong design provides quick tightening and high torque. Textured non-slip, non-glare finish. Choice of three knob sizes. Molded-in brass insert provides superior thread strength. Non-standard thread sizes, reamed holes, molded-in studs, or special colors are available in quantities of 250 and above.

THERMOPLASTIC — TAPPED (USA)

PART NO.	A DIA	B	C DIA	D	E	F	G
CL-440-TPK	1-1/2	7/8	1/2	3/8	1/4-20	7/16	9/32
CL-450-TPK					5/16-18		
CL-640-TPK	2	1-1/16	5/8	1/2	1/4-20	7/16	3/8
CL-650-TPK					5/16-18		
CL-660-TPK					3/8-16		
CL-850-TPK	2-1/2	1-1/8	3/4	1/2	5/16-18	7/16	1/2
CL-860-TPK					3/8-16	1/2	

THERMOPLASTIC — TAPPED THROUGH HOLE (USA)

PART NO.	A DIA	B	C DIA	D	E	F	G
CL-851-TPK	2-1/2	1-1/8	3/4	1/2	5/16-18	5/8	1/2
CL-861-TPK					3/8-16		

Carr Lane®
MANUFACTURING CO.
4200 Carr Lane Ct., P.O. Box 191970
St. Louis, Missouri 63119-7970 USA
Phone: 314-647-6200, FAX: 314-647-5736
Web Site: www.carrlane.com

(Rev. 4-07)

T-HANDLE KNOBS

BLACK PHENOLIC PLASTIC OR THERMOPLASTIC WITH BRASS INSERT

Phenolic — Tapped

1/4-20	CL-632-TK
5/16-18	CL-642-TK
3/8-16	CL-652-TK
3/8-24	CL-654-TK
M8	CLM-642-TK
M10	CLM-652-TK

NOW ALSO AVAILABLE IN METRIC!

Thermoplastic — Tapped

1/4-20	CL-6320-TK
5/16-18	CL-6420-TK
3/8-16	CL-6520-TK
M8	CLM-6420-TK
M10	CLM-6520-TK

1/4-20	CL-432-TK
5/16-18	CL-442-TK
3/8-16	CL-452-TK
M6	CLM-432-TK
M8	CLM-442-TK

1/4-20	CL-232-TK
M6	CLM-232-TK

T-Handle Knobs provide maximum leverage for heavy-duty clamping. Ideal for fastening fold-down handles and stands. Available in phenolic plastic (one knob size) for a shiny polished finish, or in thermoplastic (three knob sizes) for a textured non-slip, non-glare finish. Molded-in brass insert provides superior thread strength. Non-standard thread sizes, reamed holes, molded-in studs, or special colors are available in quantities of 250 and above. Note: Catalog photos are actual size.

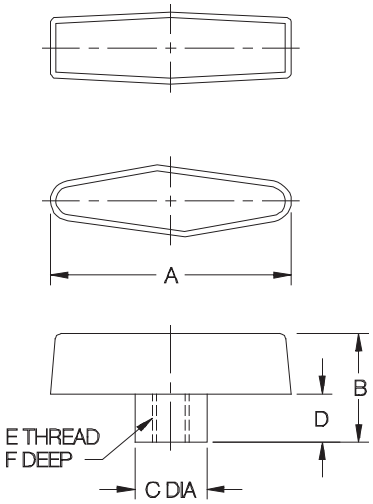

PHENOLIC — TAPPED (USA & METRIC)

PART NO.	A	B	C DIA	D	E	F
CL-632-TK	2-1/2	2-1/2	2-1/2	2-1/2	1/4-20	5/8
CL-642-TK					5/16-18	
CL-652-TK					3/8-16	1/2
CL-654-TK					3/8-24	
CLM-642-TK					M8	5/8
CLM-652-TK					M10	1/2

THERMOPLASTIC — TAPPED (USA & METRIC)

PART NO.	A	B	C DIA	D	E	F
CL-232-TK	1	7/8	1/2	3/8	1/4-20	7/16
CLM-232-TK					M6	
CL-432-TK	2	1-1/8	3/4	1/2	1/4-20	5/8
CL-442-TK					5/16-18	
CL-452-TK					3/8-16	1/2
CLM-432-TK					M6	5/8
CLM-442-TK					M8	
CL-6320-TK	2-1/2	1-1/4	3/4	5/8	1/4-20	5/8
CL-6420-TK					5/16-18	
CL-6520-TK					3/8-16	1/2
CLM-6420-TK					M8	5/8
CLM-6520-TK					M10	1/2

Carr Lane MANUFACTURING CO.
4200 Carr Lane Ct., P.O. Box 191970
St. Louis, Missouri 63119-7970 USA
Phone: 314-647-6200, FAX: 314-647-5736
Web Site: www.carrlane.com

(Rev. 6-06)

QUARTER-TURN SCREWS

12L14 STEEL, CARBURIZED-HARDENED, BLACK OXIDE FINISH

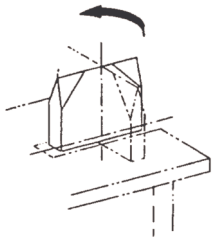

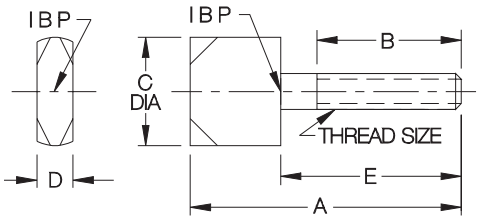

Rotate screw 90 degrees (1/4 turn) to latch. Ideal for swing-away lids and jig plates. Beveled edges allow easy insertion into a slot. Also available soft (not carburized-hardened) for customizing as desired.

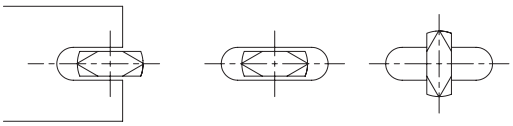

Use quarter-turn screws in either open or closed slots.

USA

PART NO. HARDENED	PART NO. SOFT	THREAD SIZE	A	B	C DIA	D	E
CL-1-QTS	CL-10-QTS	#10-24	1-1/2	7/8	5/8	3/16	1
CL-2-QTS	CL-20-QTS	#10-32			1/2		
CL-3-QTS	CL-30-QTS	1/4-20	1-7/8	1	3/4	1/4	1-1/4
CL-4-QTS	CL-40-QTS	5/16-18	2-1/4	1-1/4	1	5/16	1-1/2
CL-5-QTS	CL-50-QTS	3/8-16	2-1/2			3/8	
CL-6-QTS	CL-60-QTS	1/2-13	2-3/4	1-1/2	1-1/4	1/2	1-3/4

METRIC

CLM-5-QTS	—	M5	1.57	.79	.63	.20	.98
CLM-6-QTS	—	M6	1.97	.98	.75	.24	1.18
CLM-8-QTS	—	M8	2.36	1.38	1.00	.31	1.57
CLM-10-QTS	—	M10	2.56		1.00	.39	
CLM-12-QTS	—	M12	2.76	1.57	1.26	.47	1.77

HALF-TURN SCREWS

12L14 STEEL, CARBURIZED-HARDENED, BLACK OXIDE FINISH

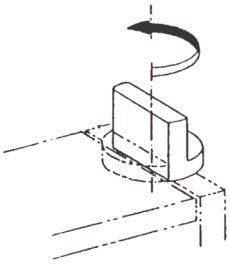

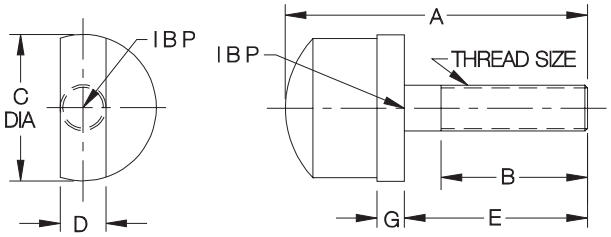

Rotate screw 180 degrees (1/2 turn) to latch. Allows latching swing-away lids and jig plates without machining a slot.

USA

PART NO. HARDENED	THREAD SIZE	A	B	C DIA	D	E	G
CL-1-HTS	#10-32	1-11/16	7/8	3/4	3/16	1	3/16
CL-2-HTS	1/4-20	2	1	3/4	1/4	1-1/4	
CL-3-HTS	5/16-18	2-1/16		1	5/16		
CL-4-HTS	3/8-16	2-11/16	1-1/2	1-1/16	3/8	1-3/4	1/4
CL-5-HTS	1/2-13	2-3/4		1-1/4	1/2		

METRIC

CLM-5-HTS	M5	1.69	.87	.75	.20	.98	.20
CLM-6-HTS	M6	1.93	.94	.75	.24	1.18	
CLM-8-HTS	M8	1.97		1.00	.31		
CLM-10-HTS	M10	2.72	1.54	1.06	.39	1.77	.24

CarrLane®
MANUFACTURING CO.
4200 Carr Lane Ct., P.O. Box 191970
St. Louis, Missouri 63119-7970 USA
Phone: 314-647-6200, FAX: 314-647-5736
Web Site: www.carrlane.com

(Rev. 3-07)

BAR-HANDLE SCREW CLAMPS

STEEL: 12L14 STEEL BODY, CARBURIZED HARDENED, BLACK OXIDE FINISH. 12L14 STEEL HANDLE, BLACK OXIDE FINISH.
300-SERIES STAINLESS STEEL SPRING. STAINLESS: 300-SERIES STAINLESS STEEL.

Screw clamp with a sliding bar handle for excellent leverage. The bar can be moved to any position, for convenient tightening, and is held in place by light spring force. These screw clamps accept all standard feet for swivel screws (see page 75 for foot dimensions and specifications). Type A and B feet are also available in Delrin, by adding "N" to the part number (examples: CL-620-BHSAN, CL-620-BHSA-SN). Available in screw sizes from 3/8-16 to 5/8-11 (M10 to M16 in metric), each in several lengths.

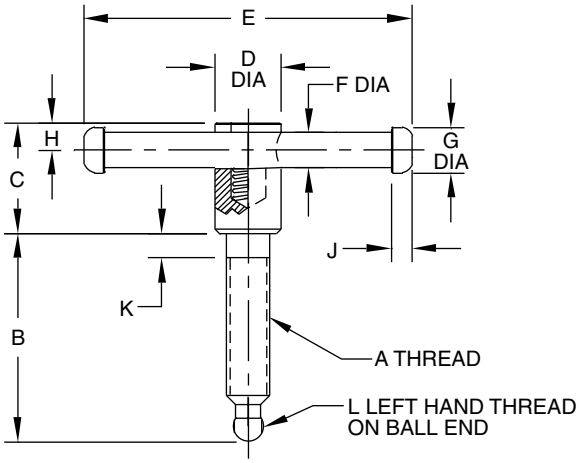

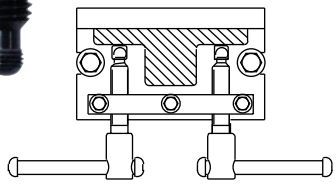

Type A Foot

Type B Foot

Type C Foot

Type D Foot

Type E Foot

GENERAL DIMENSIONS

SIZE	C	D DIA	E	F DIA	G DIA	H	J	K	L
3/8-16 or M10	1-1/4	3/4	3-1/8	5/16	3/8	9/32	9/32	3/8	1/4-28 LH
1/2-13 or M12	1-3/8	13/16	3-15/16	3/8	1/2	11/32	11/32	3/8	5/16-24 LH
5/8-11 or M16	1-5/8	1	4-3/4	1/2	5/8	13/32	13/32	3/8	7/16-20 LH

STEEL (USA)

PART NO. WITHOUT FOOT	PART NO. WITH TYPE A SMALL FOOT	PART NO. WITH TYPE B LARGE FOOT	PART NO. WITH TYPE C VEE FOOT	PART NO. WITH TYPE D BALL FOOT	PART NO. WITH TYPE E EXTRA-LARGE FOOT	A	B
CL-620-BHS	CL-620-BHSA	CL-620-BHSB	CL-620-BHSC	CL-620-BHSD	—	3/8-16	2
CL-630-BHS	CL-630-BHSA	CL-630-BHSB	CL-630-BHSC	CL-630-BHSD	—		3
CL-640-BHS	CL-640-BHSA	CL-640-BHSB	CL-640-BHSC	CL-640-BHSD	—		4
CL-820-BHS	CL-820-BHSA	CL-820-BHSB	CL-820-BHSC	CL-820-BHSD	CL-820-BHSE	1/2-13	2
CL-830-BHS	CL-830-BHSA	CL-830-BHSB	CL-830-BHSC	CL-830-BHSD	CL-830-BHSE		3
CL-840-BHS	CL-840-BHSA	CL-840-BHSB	CL-840-BHSC	CL-840-BHSD	CL-840-BHSE		4
CL-1030-BHS	CL-1030-BHSA	CL-1030-BHSB	CL-1030-BHSC	CL-1030-BHSD	CL-1030-BHSE	5/8-11	3
CL-1040-BHS	CL-1040-BHSA	CL-1040-BHSB	CL-1040-BHSC	CL-1040-BHSD	CL-1040-BHSE		4

STAINLESS STEEL (USA)

CL-620-BHS-S	CL-620-BHSA-S	CL-620-BHSB-S	—	—	—	3/8-16	2
CL-630-BHS-S	CL-630-BHSA-S	CL-630-BHSB-S	—	—	—		3
CL-640-BHS-S	CL-640-BHSA-S	CL-640-BHSB-S	—	—	—		4
CL-820-BHS-S	CL-820-BHSA-S	CL-820-BHSB-S	—	—	—	1/2-13	2
CL-830-BHS-S	CL-830-BHSA-S	CL-830-BHSB-S	—	—	—		3
CL-840-BHS-S	CL-840-BHSA-S	CL-840-BHSB-S	—	—	—		4
CL-1030-BHS-S	CL-1030-BHSA-S	CL-1030-BHSB-S	—	—	—	5/8-11	3
CL-1040-BHS -S	CL-1040-BHSA-S	CL-1040-BHSB-S	—	—	—		4

STEEL (METRIC)

CLM-1050-BHS	CLM-1050-BHSA	CLM-1050-BHSB	CLM-1050-BHSC	CLM-1050-BHSD	—	M10	1.97 (50mm)
CLM-10100-BHS	CLM-10100-BHSA	CLM-10100-BHSB	CLM-10100-BHSC	CLM-10100-BHSD	—		3.94 (100mm)
CLM-1250-BHS	CLM-1250-BHSA	CLM-1250-BHSB	CLM-1250-BHSC	CLM-1250-BHSD	CLM-1250-BHSE	M12	1.97 (50mm)
CLM-12100-BHS	CLM-12100-BHSA	CLM-12100-BHSB	CLM-12100-BHSC	CLM-12100-BHSD	CLM-12100-BHSE		3.94 (100mm)
CLM-1670-BHS	CLM-1670-BHSA	CLM-1670-BHSB	CLM-1670-BHSC	CLM-1670-BHSD	CLM-1670-BHSE	M16	2.76 (70mm)
CLM-16110-BHS	CLM-16110-BHSA	CLM-16110-BHSB	CLM-16110-BHSC	CLM-16110-BHSD	CLM-16110-BHSE		4.33 (110mm)

Carr Lane®
MANUFACTURING CO.
4200 Carr Lane Ct., P.O. Box 191970
St. Louis, Missouri 63119-7970 USA
Phone: 314-647-6200, FAX: 314-647-5736
Web Site: www.carrlane.com

(Rev. 3-07)

BAR-HANDLE NUTS

STEEL: 12L14 STEEL BODY, CARBURIZED HARDENED, BLACK OXIDE FINISH. 12L14 STEEL HANDLE, BLACK OXIDE FINISH.
300-SERIES STAINLESS STEEL SPRING.
STAINLESS: 300-SERIES STAINLESS STEEL.

Extension nut with a sliding bar handle for excellent leverage. The bar can be moved to any position, for convenient tightening, and is held in place by light spring force. Available in thread sizes from 3/8-16 to 5/8-11 (M10 to M16 in metric).

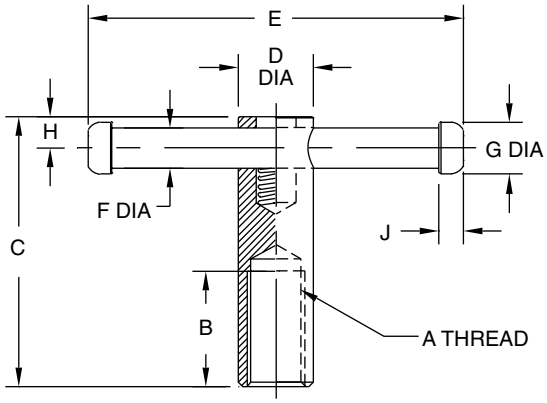

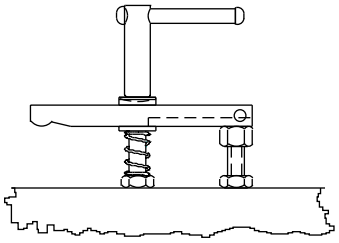

STEEL (USA)

PART NO.	A	B	C	D DIA	E	F DIA	G DIA	H	J
CL-6-BHN	3/8-16	7/8	2-3/8	3/4	3-1/8	5/16	3/8	9/32	9/32
CL-8-BHN	1/2-13	1-1/8	2-3/4	13/16	3-15/16	3/8	1/2	11/32	5/16
CL-10-BHN	5/8-11	1-3/8	3-3/8	1	4-3/4	1/2	5/8	13/32	3/8

STAINLESS STEEL (USA)

CL-6-BHN-S	3/8-16	7/8	2-3/8	3/4	3-1/8	5/16	3/8	9/32	9/32
CL-8-BHN-S	1/2-13	1-1/8	2-3/4	13/16	3-15/16	3/8	1/2	11/32	5/16
CL-10-BHN-S	5/8-11	1-3/8	3-3/8	1	4-3/4	1/2	5/8	13/32	3/8

STEEL (METRIC)

CLM-10-BHN	M10	.79	2.36	3/4	3-1/8	5/16	3/8	9/32	9/32
CLM-12-BHN	M12	.98	2.76	13/16	3-15/16	3/8	1/2	11/32	5/16
CLM-16-BHN	M16	1.38	3.35	1	4-3/4	1/2	5/8	13/32	3/8

BAR KNOBS

CAST IRON, ZINC PLATED CLEAR CHROMATE

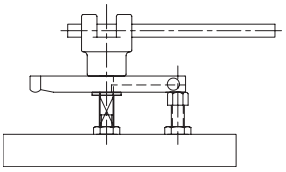

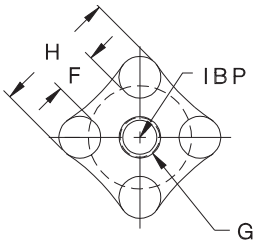

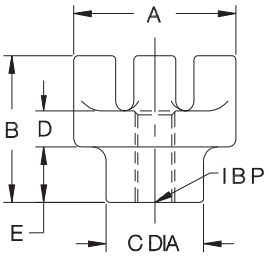

Heavy-duty knob that can be turned easily by hand, then tightened by inserting a bar between the prongs. Choose from three knob sizes, each available blank or with a choice of tapped holes.

USA & METRIC

PART NO.	A	B	C DIA	D	E	F	G	H
CL-1-BK	2	2-1/8	1-1/4	1/2	7/8	7/16	BLANK	1-5/8
CL-2-BK							3/8-16	
CL-4-BK							1/2-13	
CL-6-BK							5/8-11	
CLM-2-BK							M10	
CLM-4-BK							M12	
CLM-6-BK							M16	
CL-8-BK	2-1/2	2-3/8	1-1/2	9/16	15/16	11/16	BLANK	2
CL-9-BK							1/2-13	
CL-11-BK							5/8-11	
CL-13-BK							3/4-10	
CLM-9-BK							M12	
CLM-11-BK							M16	
CLM-13-BK							M20	
CL-15-BK	3-1/2	2-3/8	2-1/8	9/16	15/16	1-5/16	BLANK	2-7/8
CL-16-BK							3/4-10	
CL-18-BK							7/8-9	
CL-20-BK							1-8	
CLM-16-BK							M20	
CLM-20-BK							M24	

Carr Lane MANUFACTURING CO.
4200 Carr Lane Ct., P.O. Box 191970
St. Louis, Missouri 63119-7970 USA
Phone: 314-647-6200, FAX: 314-647-5736
Web Site: www.carrlane.com

(Rev. 8-06)

BAR-LOK™
QUICK-ACTING SCREW CLAMPS

12L14 STEEL, CARBURIZED-HARDENED, ZINC PLATED YELLOW CHROMATE
KNOB HANDLE: 319 ALUMINUM ALLOY

Sliding Handle

Knob Handle

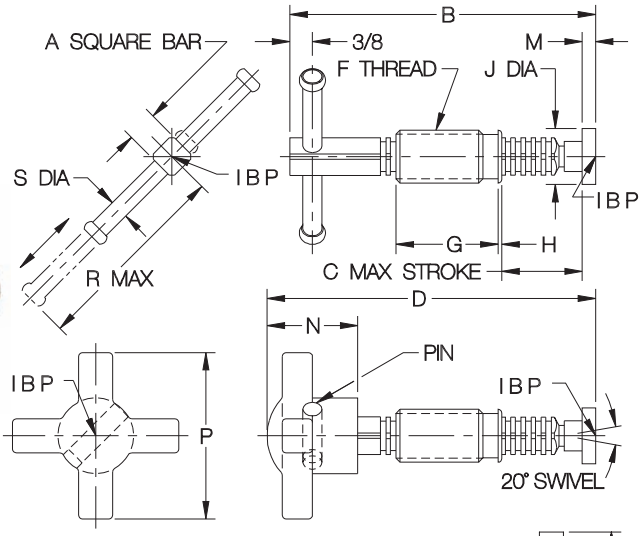

Definitely the best quick-acting screw clamp available anywhere! This patented sliding-bar design works smoothly and positively – just slide the bar forward, then twist to apply force. As strong as a standard screw clamp, but much faster. Choose either a comfortable knob handle or a sliding handle for extra leverage. Available in 3/8", 1/2", and 5/8" bar sizes, each in a choice of several lengths and foot styles. Ball and foot are threaded to allow easy installation and removal, a *lefthand* thread to positively prevent backout when turning the screw counterclockwise. Once the threads clear during installation, the foot rotates and pivots freely (20° included angle).

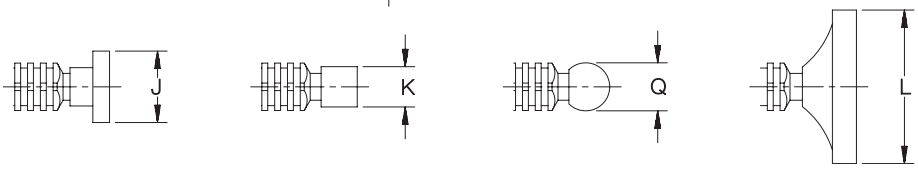

With standard foot:
CL-14-BLK
CL-14-BLKN (Delrin®)

With small foot, add A:
CL-14-BLKA
CL-14-BLKAN (Delrin®)

With ball foot, add -D:
CL-14-BLKD

With large foot, add E:
CL-14-BLKE

SLIDING HANDLE (USA)

PART NO.	A	B	C	D	F THREAD	G	H	J DIA	K DIA	L DIA	M	N	P	Q	R	S DIA	OLD BAR-LOK NUMBER
CL-14-BLT		4	1-9/16														S-204-T
CL-15-BLT	3/8	5	2-9/16	—	3/4-10	1-3/8	1/8	.750	.390	1.50	.187	—	—	.500	2-15/16	1/4	S-205-T
CL-16-BLT		6	3-9/16														S-206-T
CL-25-BLT		5	2-3/16														M-205-T
CL-26-BLT		6	3-3/16														M-206-T
CL-28-BLT	1/2	8	5-3/16	—	7/8-9	1-11/16	1/16	.930	.500	2.00	.218	—	—	.625	3-5/16	5/16	M-208-T
CL-210-BLT		10	7-3/16														M-210-T
CL-212-BLT		12	9-3/16														M-212-T
CL-35-BLT		5	2-3/16														H-205-T
CL-36-BLT		6	3-3/16														H-206-T
CL-38-BLT	5/8	8	5-3/16	—	1-1/8-7	1-11/16	1/16	.930	.500	2.00	.218	—	—	.625	3-1/4	5/16	H-208-T
CL-310-BLT		10	7-3/16														H-210-T
CL-312-BLT		12	9-3/16														H-212-T

KNOB HANDLE (USA)

CL-14-BLK			1-5/16	4-11/16													
CL-15-BLK	3/8	—	2-5/16	5-11/16	3/4-10	1-3/8	1/8	3/4	.390	1.50	.187	1-7/16	2-1/8	.500	—	—	—
CL-16-BLK			3-5/16	6-11/16													
CL-25-BLK			1-5/8	5-3/8													
CL-26-BLK			2-5/8	6-3/8													
CL-28-BLK	1/2	—	4-5/8	8-3/8	7/8-9	1-11/16	1/16	15/16	.500	2.00	.218	1-1/2	2-3/4	.625	—	—	—
CL-210-BLK			6-5/8	10-3/8													
CL-212-BLK			8-5/8	12-3/8													
CL-35-BLK			1-5/8	5-3/8													
CL-36-BLK			2-5/8	6-3/8													
CL-38-BLK	5/8	—	4-5/8	8-3/8	1-1/8-7	1-11/16	1/16	15/16	.500	2.00	.218	1-1/2	2-3/4	.625	—	—	—
CL-310-BLK			6-5/8	10-3/8													
CL-312-BLK			8-5/8	12-3/8													

CarrLane®
MANUFACTURING CO.
4200 Carr Lane Ct., P.O. Box 191970
St. Louis, Missouri 63119-7970 USA
Phone: 314-647-6200, FAX: 314-647-5736
Web Site: www.carrlane.com

(Rev. 6-06)

BAR-LOK™
QUICK-ACTING SCREW CLAMPS

12L14 STEEL, CARBURIZED-HARDENED, ZINC PLATED YELLOW CHROMATE
KNOB HANDLE: 319 ALUMINUM ALLOY

CLAMPING ACTION

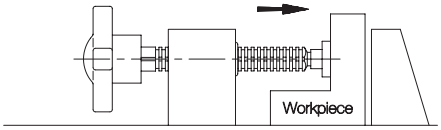

1. Slide clamping bar forward to contact the workpiece.

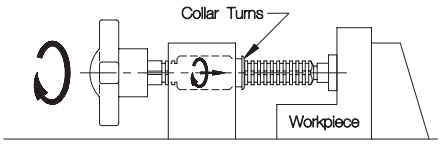

2. Turn clockwise to engage the threaded collar and apply clamping force.

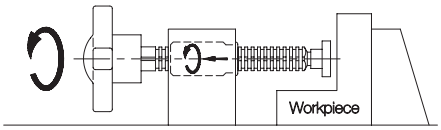

3. After machining, turn counterclockwise to unclamp and disengage the collar.

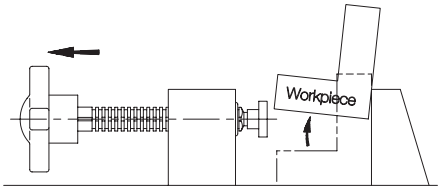

4. Slide clamping bar back for unloading.

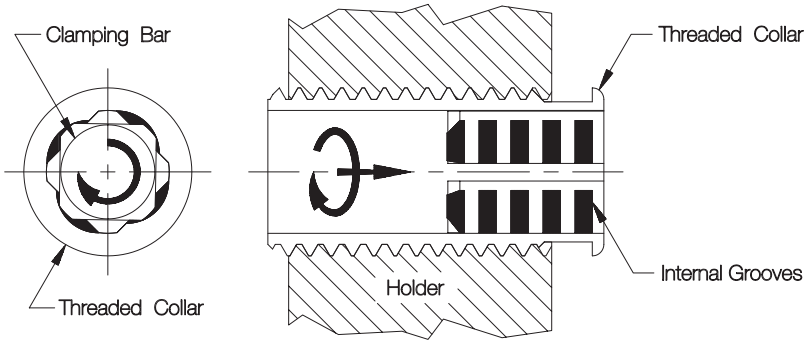

Clockwise

Turning the clamping bar clockwise engages internal grooves in the threaded collar. Both components then turn together as a single unit to apply screw force.

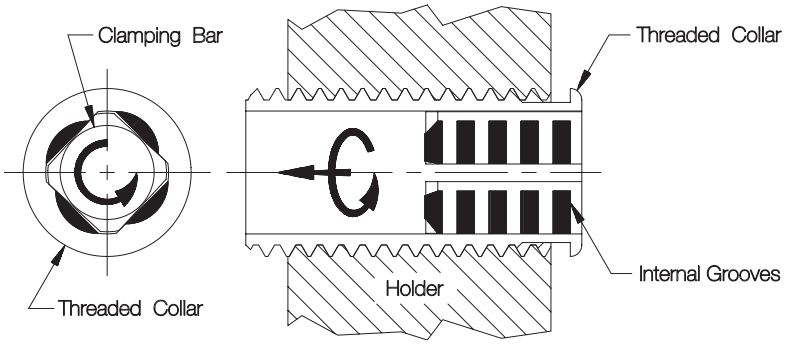

Counterclockwise

Turning the clamping bar counterclockwise loosens the screw clamp and disengages the collar, allowing the bar to slide back and forth.

Mounting Block

Versatile mounting base made especially for Bar-Lok™ screw clamps. Attach with two socket-head cap screws. Two sets of mounting holes allow either base mounting or through-hole wall mounting.

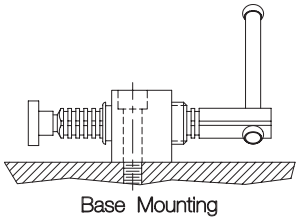

Base Mounting

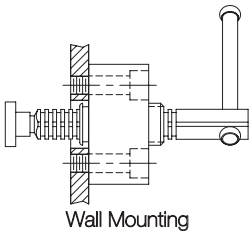

Wall Mounting

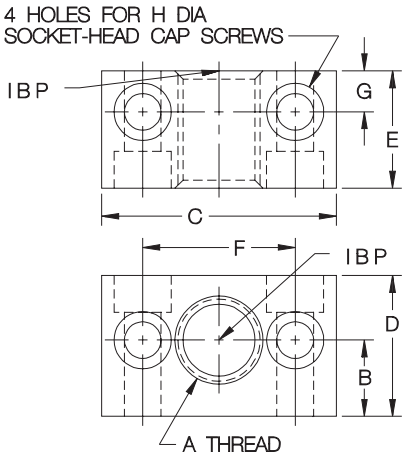

MOUNTING BLOCKS

PART NO.	A THREAD	B	C	D	E	F	G	H DIA
CL-1-BLM	3/4-10	13/16	2-1/8	1-3/8	1-1/4	1-3/8	7/16	5/16 OR M8
CL-2-BLM	7/8-9		2-1/2	1-1/2		1-5/8		3/8 OR M10
CL-3-BLM	1-1/8-7	1	3-1/8	1-3/4	1-1/2	2-1/8	1/2	1/2 OR M12

Carr Lane®
MANUFACTURING CO.
4200 Carr Lane Ct., P.O. Box 191970
St. Louis, Missouri 63119-7970 USA
Phone: 314-647-6200, FAX: 314-647-5736
Web Site: www.carrlane.com

(Rev. 7-03)

QUICK-ACTING KNOBS

SINTERED IRON, BLACK OXIDE FINISH

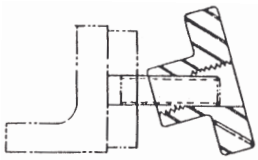

Tilt knob to slide in and out.

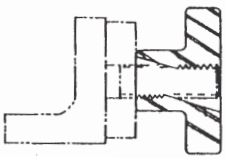

Straighten knob to engage threads for clamping.

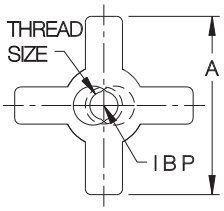

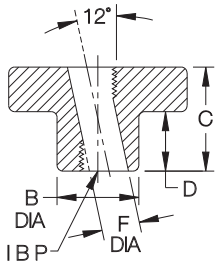

Quick-acting four-prong knob that slides in and out of clamping position, ideal when the knob must be completely removed for loading. Tilt knob to slide in, then straighten to engage threads and tighten. To remove, loosen knob, then tilt to slide out. Four-prong design provides a firm grip for applications requiring quick tightening and high torque. For full strength, use a stud that extends slightly beyond the knob, to engage all threads.

USA

PART NO.	THREAD SIZE	A	B DIA	C	D	F DIA
CL-1-QAK	1/4-20	1-1/8	9/16	5/8	5/16	17/64
CL-2-QAK	5/16-18	1-1/2	11/16	7/8	1/2	21/64
CL-3-QAK	3/8-16	2	13/16	1		25/64
CL-4-QAK	1/2-13	2-1/2	1	1-1/8	9/16	33/64
CL-5-QAK	5/8-11	3	1-1/4	1-1/4	5/8	41/64

METRIC

CLM-6-QAK	M6	1-1/8	9/16	5/8	5/16	.25
CLM-8-QAK	M8	1-1/2	11/16	7/8	1/2	.33
CLM-10-QAK	M10	2	13/16	1		.41
CLM-12-QAK	M12	2-1/2	1	1-1/8	9/16	.49
CLM-16-QAK	M16	3	1-1/4	1-1/4	5/8	.65

QUICK-ACTING KNURLED KNOBS

12L14 STEEL, BLACK OXIDE FINISH

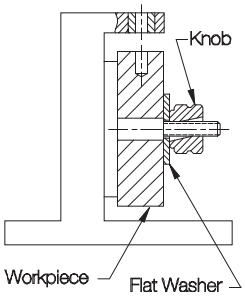

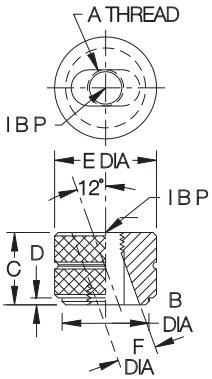

Quick-acting knob that slides in and out of clamping position, ideal when the knob must be completely removed for loading. Tilt knob to slide in, then straighten to engage threads and tighten. To remove, loosen knob, then tilt to slide out. For full strength, use a stud that extends slightly beyond the knob, to engage all threads.

USA

PART NO.	A	B DIA	C	D	E DIA	F DIA
CL-1-QKK	#10-24	1/2	7/16	1/16	5/8	7/32
CL-2-QKK	1/4-20	5/8	9/16		3/4	9/32
CL-3-QKK	5/16-18	3/4	5/8		7/8	11/32
CL-4-QKK	3/8-16	7/8	3/4	1/8	1	13/32
CL-5-QKK	1/2-13	1			1-1/8	17/32

METRIC

CLM-5-QKK	M5	.51	.43	.08	5/8	.23
CLM-6-QKK	M6	.63	.55		3/4	.27
CLM-8-QKK	M8	.75	.63		7/8	.35
CLM-10-QKK	M10	.87		.12	1	.42
CLM-12-QKK	M12	.98	.75	.12	1-1/8	.50

Carr Lane®
MANUFACTURING CO.
4200 Carr Lane Ct., P.O. Box 191970
St. Louis, Missouri 63119-7970 USA
Phone: 314-647-6200, FAX: 314-647-5736
Web Site: www.carrlane.com

(Rev. 5-06)

KNURLED HEAD SCREWS

STEEL: 12L14, CARBURIZED-HARDENED, BLACK OXIDE FINISH.
STAINLESS STEEL: 300-SERIES, PASSIVATED

Handy thumb screw. Knurled head provides a positive grip for finger tightening in light clamping applications.

STEEL (USA)

PART NO.	A	B	C DIA	D	E	F DIA	G
CL-1-KHS	#10-24	1	3/4	1/4	1/4	.12	.09
CL-2-KHS		1-1/2					
CL-3-KHS		2					
CL-1A-KHS	#10-32	1					
CL-2A-KHS		1-1/2					
CL-3A-KHS		2					
CL-4-KHS	1/4-20	1-1/2	1	5/16	1/4	.15	.12
CL-5-KHS		2					
CL-6-KHS		2-1/2					
CL-7-KHS	5/16-18	1-1/2	1-1/8	3/8	1/4	.20	.16
CL-8-KHS		2					
CL-9-KHS		2-1/2					
CL-10-KHS	3/8-16	2	1-1/4	7/16	1/4	.25	.19
CL-11-KHS		2-1/2					
CL-12-KHS		3					
CL-13-KHS	1/2-13	3	1-1/4	1/2	1/4	.34	.25
CL-14-KHS		3-1/2					

STAINLESS STEEL (USA)

PART NO.	A	B	C DIA	D	E	F DIA	G
CL-23207	#10-32	3/4	1/2	3/16	1/8	.12	.09
CL-23210		1					
CL-23212		1-1/4					
CL-23215		1-1/2					
CL-23507	1/4-20	3/4	1	5/16	1/8	.15	.12
CL-23510		1					
CL-23512		1-1/4					
CL-23515		1-1/2					
CL-23520		2					
CL-23615	5/16-18	1-1/2	1-1/8	3/8	3/16	.20	.16
CL-23620		2					
CL-23625		2-1/2					
CL-23820	3/8-16	2	1-1/4	7/16	3/16	.25	.19
CL-23825		2-1/2					
CL-23830		3					

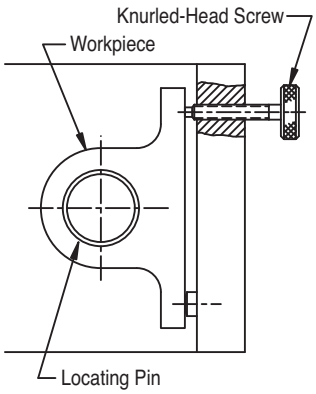

STEEL (METRIC)

PART NO.	A	B	C DIA	D	E	F DIA	G
CLM-1-KHS	M5	.98	3/4	1/4	1/4	.13	.11
CLM-2-KHS		1.57					
CLM-3-KHS		1.97					
CLM-4-KHS	M6	1.57	1	5/16	1/4	.17	.13
CLM-5-KHS		1.97					
CLM-6-KHS		2.56					
CLM-7-KHS	M8	1.57	1-1/8	3/8	1/4	.23	.18
CLM-8-KHS		1.97					
CLM-9-KHS		2.56					
CLM-10-KHS	M10	1.97	1-1/4	7/16	1/4	.27	.19
CLM-11-KHS		2.56					
CLM-12-KHS		2.95					
CLM-13-KHS	M12	2.95	1-1/4	1/2	1/4	.35	.25
CLM-14-KHS		3.54					

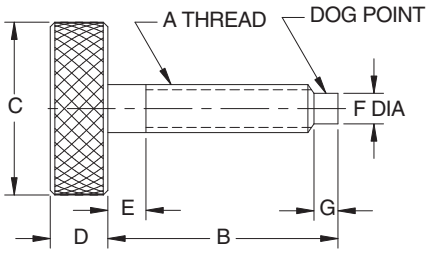

MANUFACTURING CO.
4200 Carr Lane Ct., P.O. Box 191970
St. Louis, Missouri 63119-7970 USA
Phone: 314-647-6200, FAX: 314-647-5736
Web Site: www.carrlane.com

(Rev. 7-06)

SWIVEL SCREW CLAMPS

BODY: 12L14 OR 1144 STEEL, HEAT TREATED, ZINC PLATED YELLOW CHROMATE (OR 300-SERIES STAINLESS STEEL)
FOOT: 12L14 STEEL, ZINC PLATED YELLOW CHROMATE (OR 300-SERIES STAINLESS STEEL, OR DELRIN®)

Socket-head swivel-screw assemblies that combine the bodies on page 76 with the feet on page 77. The steel version is optionally available with black oxide finish by adding "-BO" to the part number (example: CL-2-SSC-BO). Type A and B feet are optionally available in Delrin® by adding "N" to the part number (examples: CL-2-SSCN, CL-2-SSC-BON, CL-2-SSC-SN).

Type A: Small Foot

Type B: Large Foot

Type D: Ball Foot

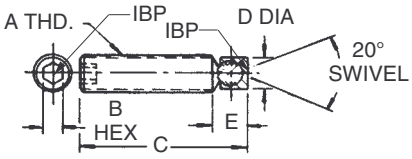

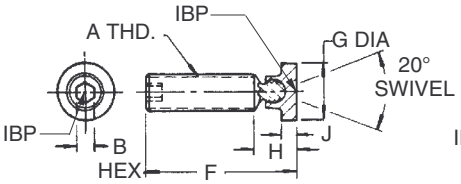

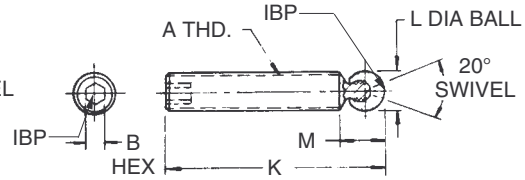

USA

TYPE A STEEL PART NO.	TYPE A STAINLESS PART NO.	TYPE B STEEL PART NO.	TYPE B STAINLESS PART NO.	TYPE D STEEL PART NO.	A	B	C	D DIA	E	F	G DIA	H	J	K	L DIA	M
CL-1-SSC	—	CL-20-SSC	—	CL-47-SSC	1/4-20	1/8	1/2	3/16	9/32	19/32	3/8	23/64	1/8	17/32	1/4	5/16
CL-2-SSC	CL-2-SSC-S	CL-21-SSC	CL-21-SSC-S	CL-48-SSC			3/4			27/32				25/32		
CL-3-SSC	CL-3-SSC-S	CL-22-SSC	CL-22-SSC-S	CL-49-SSC			1			1-3/32				1-1/32		
CL-4-SSC	CL-4-SSC-S	CL-23-SSC	CL-23-SSC-S	CL-50-SSC			1-1/2			1-19/32				1-17/32		
CL-5-SSC	—	CL-24-SSC	—	CL-51-SSC	5/16-18	5/32	3/4	1/4	11/32	27/32	1/2	27/64	5/32	25/32	5/16	23/64
CL-6-SSC	CL-6-SSC-S	CL-25-SSC	CL-25-SSC-S	CL-52-SSC			1			1-3/32				1-1/32		
CL-7-SSC	CL-7-SSC-S	CL-26-SSC	CL-26-SSC-S	CL-53-SSC			1-1/2			1-19/32				1-17/32		
CL-8-SSC	CL-8-SSC-S	CL-27-SSC	CL-27-SSC-S	CL-54-SSC			2			2-3/32				2-1/32		
CL-9-SSC	—	CL-28-SSC	—	CL-55-SSC	3/8-16	3/16	3/4	19/64	3/8	7/8	9/16	5/8	3/16	25/32	3/8	7/16
CL-10-SSC	—	CL-29-SSC	—	CL-56-SSC			1			1-1/8				1-1/32		
CL-11-SSC	CL-11-SSC-S	CL-30-SSC	CL-30-SSC-S	CL-57-SSC			1-1/2			1-5/8				1-17/32		
CL-12-SSC	CL-12-SSC-S	CL-31-SSC	CL-31-SSC-S	CL-58-SSC			2			2-1/8				2-1/32		
CL-39-SSC	CL-39-SSC-S	CL-43-SSC	CL-43-SSC-S	CL-59-SSC			3			3-1/8				3-1/32		
CL-14-SSC	—	CL-33-SSC	—	CL-61-SSC	1/2-13	1/4	1-1/2	13/32	15/32	1-9/16	3/4	17/32	3/16	1-19/32	1/2	9/16
CL-15-SSC	CL-15-SSC-S	CL-34-SSC	CL-34-SSC-S	CL-62-SSC			2			2-1/16				2-3/32		
CL-16-SSC	CL-16-SSC-S	CL-35-SSC	CL-35-SSC-S	CL-63-SSC			3			3-1/16				3-3/32		
CL-40-SSC	CL-40-SSC-S	CL-44-SSC	CL-44-SSC-S	CL-64-SSC			4			4-1/16				4-3/32		
CL-18-SSC	—	CL-37-SSC	—	CL-66-SSC	5/8-11	5/16	2	1/2	5/8	2-3/64	15/16	21/32	7/32	2-7/32	5/8	11/16
CL-19-SSC	—	CL-38-SSC	—	CL-67-SSC			3			3-3/64				3-7/32		
CL-41-SSC	—	CL-45-SSC	—	CL-68-SSC			4			4-3/64				4-7/32		
CL-42-SSC	—	CL-46-SSC	—	CL-69-SSC			5			5-3/64				5-7/32		

METRIC

CLM-1-SSC	—	CLM-20A-SSC	—	CLM-47-SSC	M6	3mm	.59	3/16	9/32	.69	3/8	23/64	1/8	.64	1/4	5/16
CLM-2-SSC	—	CLM-21A-SSC	—	CLM-48-SSC			.79			.89				.84		
CLM-3-SSC	—	CLM-22-SSC	—	CLM-49-SSC			.98			1.08				1.03		
CLM-4-SSC	—	CLM-23-SSC	—	CLM-50-SSC			1.57			1.67				1.62		
CLM-5-SSC	—	CLM-24-SSC	—	CLM-51-SSC	M8	4mm	.79	1/4	11/32	.88	1/2	27/64	5/32	.85	5/16	23/64
CLM-6-SSC	—	CLM-25-SSC	—	CLM-52-SSC			.98			1.08				1.05		
CLM-7-SSC	—	CLM-26-SSC	—	CLM-53-SSC			1.57			1.67				1.64		
CLM-8-SSC	—	CLM-27-SSC	—	CLM-54-SSC			1.97			2.06				2.03		
CLM-9-SSC	—	CLM-28-SSC	—	CLM-55-SSC	M10	5mm	.79	19/64	3/8	.91	9/16	5/8	3/16	.82	3/8	7/16
CLM-10-SSC	—	CLM-29-SSC	—	CLM-56-SSC			.98			1.11				1.02		
CLM-11-SSC	—	CLM-30-SSC	—	CLM-57-SSC			1.57			1.70				1.61		
CLM-12-SSC	—	CLM-31-SSC	—	CLM-58-SSC			1.97			2.10				2.01		
CLM-13-SSC	—	CLM-32-SSC	—	CLM-59-SSC			2.95			3.08				2.99		
CLM-14-SSC	—	CLM-33-SSC	—	CLM-61-SSC	M12	6mm	1.57	13/32	15/32	1.64	3/4	17/32	3/16	1.69	1/2	9/16
CLM-15-SSC	—	CLM-34-SSC	—	CLM-62-SSC			1.97			2.03				2.08		
CLM-16-SSC	—	CLM-35-SSC	—	CLM-63-SSC			2.95			3.01				3.06		
CLM-17-SSC	—	CLM-36-SSC	—	CLM-64-SSC			3.94			4.00				4.05		
CLM-18-SSC	—	CLM-37-SSC	—	CLM-66-SSC	M16	8mm	1.97	1/2	5/8	2.01	15/16	21/32	7/32	2.06	5/8	11/16
CLM-19-SSC	—	CLM-38-SSC	—	CLM-67-SSC			2.95			2.99				3.04		
CLM-20-SSC	—	CLM-39-SSC	—	CLM-68-SSC			3.94			3.98				4.03		
CLM-21-SSC	—	CLM-40-SSC	—	CLM-69-SSC			4.92			4.97				5.02		

Carr Lane®
MANUFACTURING CO.
4200 Carr Lane Ct., P.O. Box 191970
St. Louis, Missouri 63119-7970 USA
Phone: 314-647-6200, FAX: 314-647-5736
Web Site: www.carrlane.com

(Rev. 4-07)

SWIVEL HEAD SCREWS

BODY: 12L14 STEEL, CARBURIZED-HARDENED, ZINC PLATED YELLOW CHROMATE (OR 300-SERIES STAINLESS STEEL)
FOOT: 12L14 STEEL, ZINC PLATED YELLOW CHROMATE (OR 300-SERIES STAINLESS STEEL, OR DELRIN®)

Knurled-head swivel-screw assemblies that combine the bodies on page 76 with the feet on page 77. The steel version is optionally available with a black oxide finish by adding "-BO" to the part number (example: CL-1-SHS-BO). Type A and B feet are optionally available in Delrin® by adding "N" to the part number (examples: CL-1-SHSN, CL-1-SHS-BON, CL-1-SHS-SN).

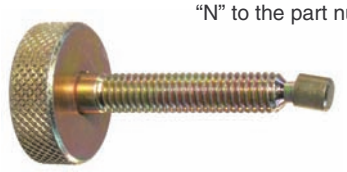

Type A: Small Foot

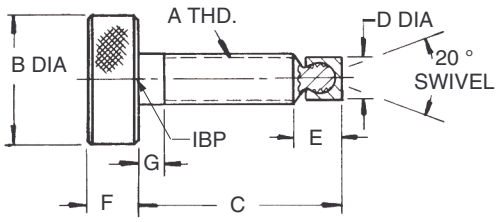

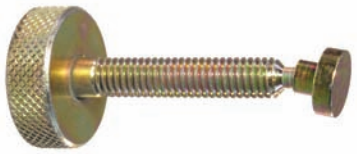

Type B: Large Foot

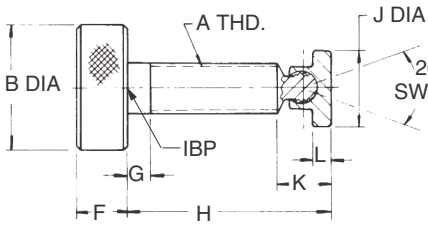

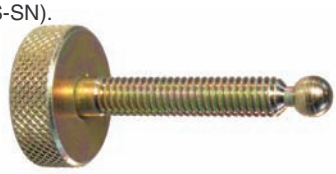

Type D: Ball Foot

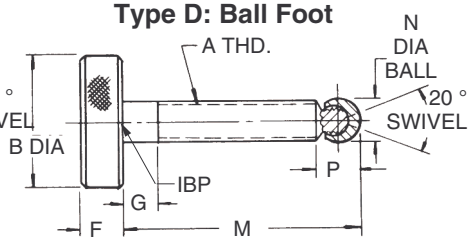

USA

TYPE A STEEL PART NO.	TYPE A STAINLESS PART NO.	TYPE B STEEL PART NO.	TYPE B STAINLESS PART NO.	TYPE D STEEL PART NO.	A	B DIA	C	D DIA	E	F	G	H	J DIA	K	L	M	N	P
CL-1-SHS	CL-1-SHS-S	CL-17-SHS	CL-17-SHS-S	CL-47-SHS	1/4-20	1	1	3/16	9/32	5/16	1/8	1-3/32	3/8	23/64	1/8	1-1/32	1/4	5/16
CL-2-SHS	CL-2-SHS-S	CL-18-SHS	CL-18-SHS-S	CL-48-SHS			1-1/2					1-19/32				1-17/32		
CL-3-SHS	CL-3-SHS-S	CL-19-SHS	CL-19-SHS-S	CL-49-SHS			2					2-3/32				2-1/32		
CL-33-SHS	CL-33-SHS-S	CL-40-SHS	CL-40-SHS-S	CL-50-SHS			3					3-3/32				3-1/32		
CL-4-SHS	—	CL-20-SHS	—	CL-51-SHS	5/16-18	1-1/8	1	1/4	11/32	3/8	3/16	1-3/32	1/2	27/64	5/32	1-1/64	5/16	23/64
CL-5-SHS	CL-5-SHS-S	CL-21-SHS	CL-21-SHS-S	CL-52-SHS			1-1/2					1-19/32				1-33/64		
CL-6-SHS	CL-6-SHS-S	CL-22-SHS	CL-22-SHS-S	CL-53-SHS			2					2-3/32				2-1/64		
CL-34-SHS	CL-34-SHS-S	CL-41-SHS	CL-41-SHS-S	CL-54-SHS			3					3-3/32				3-1/64		
CL-8-SHS	—	CL-24-SHS	—	CL-56-SHS	3/8-16	1-1/4	1-1/2	19/64	3/8	7/16	3/16	1-5/8	9/16	5/8	3/16	1-9/16	3/8	7/16
CL-9-SHS	CL-9-SHS-S	CL-25-SHS	CL-25-SHS-S	CL-57-SHS			2					2-1/8				2-1/16		
CL-35-SHS	CL-35-SHS-S	CL-42-SHS	CL-42-SHS-S	CL-58-SHS			3					3-1/8				3-1/16		
CL-36-SHS	CL-36-SHS-S	CL-43-SHS	CL-43-SHS-S	CL-59-SHS			4					4-1/8				4-1/16		
CL-11-SHS	—	CL-27-SHS	—	CL-61-SHS	1/2-13	1-1/4	1-1/2	13/32	15/32	1/2	3/16	1-9/16	3/4	17/32	3/16	1-19/32	1/2	9/16
CL-12-SHS	—	CL-28-SHS	—	CL-62-SHS			2					2-1/16				2-3/32		
CL-13-SHS	CL-13-SHS-S	CL-29-SHS	CL-29-SHS-S	CL-63-SHS			3					3-1/16				3-3/32		
CL-37-SHS	CL-37-SHS-S	CL-44-SHS	CL-44-SHS-S	CL-64-SHS			4					4-1/16				4-3/32		
CL-15-SHS	—	CL-31-SHS	—	CL-66-SHS	5/8-11	1-1/4	2	1/2	5/8	1/2	3/16	2-3/64	15/16	21/32	7/32	2-1/8	5/8	11/16
CL-16-SHS	—	CL-32-SHS	—	CL-67-SHS			3					3-3/64				3-1/8		
CL-38-SHS	—	CL-45-SHS	—	CL-68-SHS			4					4-3/64				4-1/8		
CL-39-SHS	—	CL-46-SHS	—	CL-69-SHS			5					5-3/64				5-1/8		

METRIC

CLM-1-SHS	—	CLM-17A-SHS	—	CLM-47-SHS	M6	1	.98	3/16	9/32	5/16	1/8	1.08	3/8	23/64	1/8	1.03	1/4	5/16
CLM-2-SHS	—	CLM-18A-SHS	—	CLM-48-SHS			1.57					1.67				1.62		
CLM-3-SHS	—	CLM-19-SHS	—	CLM-49-SHS			1.97					2.07				2.02		
CLM-4-SHS	—	CLM-40-SHS	—	CLM-50-SHS			2.95					3.05				3.00		
CLM-5-SHS	—	CLM-20-SHS	—	CLM-51-SHS	M8	1-1/8	.98	1/4	11/32	3/8	3/16	1.08	1/2	27/64	5/32	1.05	5/16	23/64
CLM-6-SHS	—	CLM-21-SHS	—	CLM-52-SHS			1.57					1.67				1.64		
CLM-7-SHS	—	CLM-22-SHS	—	CLM-53-SHS			1.97					2.06				2.03		
CLM-8-SHS	—	CLM-41-SHS	—	CLM-54-SHS			2.95					3.05				3.02		
CLM-9-SHS	—	CLM-24-SHS	—	CLM-56-SHS	M10	1-1/4	1.57	19/64	3/8	7/16	3/16	1.70	9/16	5/8	3/16	1.61	3/8	7/16
CLM-10-SHS	—	CLM-25-SHS	—	CLM-57-SHS			1.97					2.10				2.01		
CLM-11-SHS	—	CLM-42-SHS	—	CLM-58-SHS			2.95					3.08				2.99		
CLM-12-SHS	—	CLM-43-SHS	—	CLM-59-SHS			3.94					4.06				3.97		
CLM-11A-SHS	—	CLM-27-SHS	—	CLM-61-SHS	M12	1-1/4	1.57	13/32	15/32	1/2	3/16	1.64	3/4	17/32	3/16	1.69	1/2	9/16
CLM-12A-SHS	—	CLM-28-SHS	—	CLM-62-SHS			1.97					2.03				2.08		
CLM-13-SHS	—	CLM-29-SHS	—	CLM-63-SHS			2.95					3.01				3.06		
CLM-14-SHS	—	CLM-44-SHS	—	CLM-64-SHS			3.94					4.00				4.05		
CLM-15-SHS	—	CLM-31-SHS	—	CLM-66-SHS	M16	1-1/4	1.97	1/2	5/8	1/2	3/16	2.01	15/16	21/32	7/32	2.06	5/8	11/16
CLM-16-SHS	—	CLM-32-SHS	—	CLM-67-SHS			2.95					3.00				3.05		
CLM-17-SHS	—	CLM-45-SHS	—	CLM-68-SHS			3.94					3.98				4.03		
CLM-18-SHS	—	CLM-46-SHS	—	CLM-69-SHS			4.92					4.97				5.02		

Carr Lane®
MANUFACTURING CO.
4200 Carr Lane Ct., P.O. Box 191970
St. Louis, Missouri 63119-7970 USA
Phone: 314-647-6200, FAX: 314-647-5736
Web Site: www.carrlane.com

(Rev. 7-02)

BODIES FOR SWIVEL SCREWS

STEEL: 12L14 OR 1144, HEAT TREATED, ZINC PLATED YELLOW CHROMATE (BLACK OXIDE OPTIONAL)
STAINLESS STEEL: 300-SERIES

Socket Head

Swivel-screw bodies that accept any of the feet shown on the opposite page. Socket-head version allows applying strong clamping force using a hex wrench. Patented.

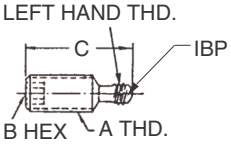

SOCKET HEAD (USA)

PART NO. STEEL ZINC PLATED	PART NO. STEEL BLACK OXIDE	PART NO. STAINLESS STEEL	A	B	C	D
CL-1-BSS	CL-1-BSS-BO	—	1/4-20	1/8	15/32	#8-36 L.H.
CL-2-BSS	CL-2-BSS-BO	CL-2-BSS-S			23/32	
CL-3-BSS	CL-3-BSS-BO	CL-3-BSS-S			31/32	
CL-4-BSS	CL-4-BSS-BO	CL-4-BSS-S			1-15/32	
CL-5-BSS	CL-5-BSS-BO	—	5/16-18	5/32	23/32	#12-28 L.H.
CL-6-BSS	CL-6-BSS-BO	CL-6-BSS-S			31/32	
CL-7-BSS	CL-7-BSS-BO	CL-7-BSS-S			1-15/32	
CL-8-BSS	CL-8-BSS-BO	CL-8-BSS-S			1-31/32	
CL-9-BSS	CL-9-BSS-BO	—	3/8-16	3/16	11/16	1/4-28 L.H.
CL-10-BSS	CL-10-BSS-BO	—			15/16	
CL-11-BSS	CL-11-BSS-BO	CL-11-BSS-S			1-7/16	
CL-12-BSS	CL-12-BSS-BO	CL-12-BSS-S			1-15/16	
CL-13-BSS	CL-13-BSS-BO	CL-13-BSS-S			2-15/16	
CL-15-BSS	CL-15-BSS-BO	—	1/2-13	1/4	1-7/16	5/16-24 L.H.
CL-16-BSS	CL-16-BSS-BO	CL-16-BSS-S			1-15/16	
CL-17-BSS	CL-17-BSS-BO	CL-17-BSS-S			2-15/16	
CL-18-BSS	CL-18-BSS-BO	CL-18-BSS-S			3-15/16	
CL-20-BSS	CL-20-BSS-BO	—	5/8-11	5/16	1-15/16	7/16-20 L.H.
CL-21-BSS	CL-21-BSS-BO	—			2-15/16	
CL-22-BSS	CL-22-BSS-BO	—			3-15/16	
CL-23-BSS	CL-23-BSS-BO	—			4-15/16	

SOCKET HEAD (METRIC)

PART NO. STEEL ZINC PLATED	PART NO. STEEL BLACK OXIDE	A	B	C	D
CLM-1-BSS	CLM-1-BSS-BO	M6	3mm	.56	#8-36 L.H.
CLM-2-BSS	CLM-2-BSS-BO			.76	
CLM-3-BSS	CLM-3-BSS-BO			.95	
CLM-4-BSS	CLM-4-BSS-BO			1.54	
CLM-5-BSS	CLM-5-BSS-BO	M8	4mm	.74	#12-28 L.H.
CLM-6-BSS	CLM-6-BSS-BO			.94	
CLM-7-BSS	CLM-7-BSS-BO			1.53	
CLM-8-BSS	CLM-8-BSS-BO			1.92	
CLM-9-BSS	CLM-9-BSS-BO	M10	5mm	.73	1/4-28 L.H.
CLM-10-BSS	CLM-10-BSS-BO			.93	
CLM-11-BSS	CLM-11-BSS-BO			1.52	
CLM-12-BSS	CLM-12-BSS-BO			1.92	
CLM-13-BSS	CLM-13-BSS-BO			2.90	
CLM-15-BSS	CLM-15-BSS-BO	M12	6mm	1.52	5/16-24 L.H.
CLM-16-BSS	CLM-16-BSS-BO			1.91	
CLM-17-BSS	CLM-17-BSS-BO			2.89	
CLM-18-BSS	CLM-18-BSS-BO			3.88	
CLM-20-BSS	CLM-20-BSS-BO	M16	8mm	1.89	7/16-20 L.H.
CLM-21-BSS	CLM-21-BSS-BO			2.87	
CLM-22-BSS	CLM-22-BSS-BO			3.86	
CLM-23-BSS	CLM-23-BSS-BO			4.85	

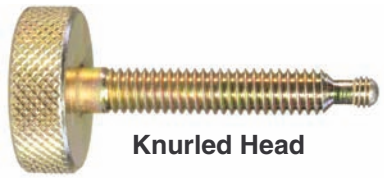

Knurled Head

Similar to the above screws, except with a knurled head for finger tightening.

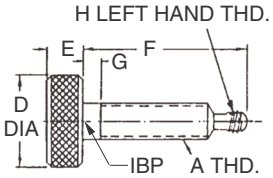

KNURLED HEAD (USA)

PART NO. STEEL ZINC PLATED	PART NO. STEEL BLACK OXIDE	STAINLESS STEEL PART NO.	A	D DIA	E	F	G	H
CL-24-BSS	CL-24-BSS-BO	CL-24-BSS-S	1/4-20	1	5/16	31/32	1/8	#8-36 L.H.
CL-25-BSS	CL-25-BSS-BO	CL-25-BSS-S				1-15/32		
CL-26-BSS	CL-26-BSS-BO	CL-26-BSS-S				1-31/32		
CL-27-BSS	CL-27-BSS-BO	CL-27-BSS-S				2-31/32		
CL-28-BSS	CL-28-BSS-BO	—	5/16-18	1-1/8	3/8	31/32	3/16	#12-28 L.H.
CL-29-BSS	CL-29-BSS-BO	CL-29-BSS-S				1-15/32		
CL-30-BSS	CL-30-BSS-BO	CL-30-BSS-S				1-31/32		
CL-31-BSS	CL-31-BSS-BO	CL-31-BSS-S				2-31/32		
CL-33-BSS	CL-33-BSS-BO	—	3/8-16	1-1/4	7/16	1-7/16	3/16	1/4-28 L.H.
CL-34-BSS	CL-34-BSS-BO	CL-34-BSS-S				1-15/16		
CL-35-BSS	CL-35-BSS-BO	CL-35-BSS-S				2-15/16		
CL-36-BSS	CL-36-BSS-BO	CL-36-BSS-S				3-15/16		
CL-38-BSS	CL-38-BSS-BO	—	1/2-13	1-1/4	1/2	1-7/16	3/16	5/16-24 L.H.
CL-39-BSS	CL-39-BSS-BO	—				1-15/16		
CL-40-BSS	CL-40-BSS-BO	CL-40-BSS-S				2-15/16		
CL-41-BSS	CL-41-BSS-BO	CL-41-BSS-S				3-15/16		
CL-43-BSS	CL-43-BSS-BO	—	5/8-11	1-1/4	1/2	1-15/16	3/16	7/16-20 L.H.
CL-44-BSS	CL-44-BSS-BO	—				2-15/16		
CL-45-BSS	CL-45-BSS-BO	—				3-15/16		
CL-46-BSS	CL-46-BSS-BO	—				4-15/16		

KNURLED HEAD (METRIC)

PART NO. STEEL ZINC PLATED	PART NO. STEEL BLACK OXIDE	A	D DIA	E	F	G	H
CLM-24-BSS	CLM-24-BSS-BO	M6	1	5/16	.95	1/8	#8-36 L.H.
CLM-25-BSS	CLM-25-BSS-BO				1.54		
CLM-26-BSS	CLM-26-BSS-BO				1.94		
CLM-27-BSS	CLM-27-BSS-BO				2.92		
CLM-28-BSS	CLM-28-BSS-BO	M8	1-1/8	3/8	.94	3/16	#12-28 L.H.
CLM-29-BSS	CLM-29-BSS-BO				1.53		
CLM-30-BSS	CLM-30-BSS-BO				1.92		
CLM-31-BSS	CLM-31-BSS-BO				2.91		
CLM-33-BSS	CLM-33-BSS-BO	M10	1-1/4	7/16	1.52	3/16	1/4-28 L.H.
CLM-34-BSS	CLM-34-BSS-BO				1.92		
CLM-35-BSS	CLM-35-BSS-BO				2.90		
CLM-36-BSS	CLM-36-BSS-BO				3.88		
CLM-38-BSS	CLM-38-BSS-BO	M12	1-1/4	1/2	1.52	3/16	5/16-24 L.H.
CLM-39-BSS	CLM-39-BSS-BO				1.91		
CLM-40-BSS	CLM-40-BSS-BO				2.89		
CLM-41-BSS	CLM-41-BSS-BO				3.88		
CLM-43-BSS	CLM-43-BSS-BO	M16	1-1/4	1/2	1.89	3/16	7/16-20 L.H.
CLM-44-BSS	CLM-44-BSS-BO				2.88		
CLM-45-BSS	CLM-45-BSS-BO				3.86		
CLM-46-BSS	CLM-46-BSS-BO				4.85		

CarrLane®
MANUFACTURING CO.
4200 Carr Lane Ct., P.O. Box 191970
St. Louis, Missouri 63119-7970 USA
Phone: 314-647-6200, FAX: 314-647-5736
Web Site: www.carrlane.com

(Rev. 10-05)

FEET FOR SWIVEL SCREWS

STEEL: (TYPES A, B, D, E), 12L14 STEEL, ZINC PLATED YELLOW CHROMATE (BLACK OXIDE OPTIONAL)
STEEL (TYPE C): 1018 STEEL, CARBURIZED HARDENED, ZINC PLATED YELLOW CHROMATE (BLACK OXIDE OPTIONAL)
STAINLESS: 300-SERIES STAINLESS STEEL
DELRIN®: WHITE DELRIN® 500

Matching feet for the swivel-screw bodies on the opposite page. Types A, B, C, and D can be used with any body-thread size. Type E can be used with the largest two sizes.

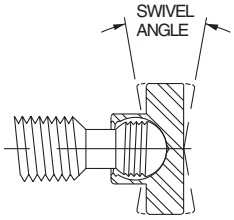

Ball and foot are threaded to allow easy installation and removal, a *lefthand* thread to positively prevent backout when turning the screw counterclockwise. Once the threads clear during installation, the foot rotates and pivots freely (20° included angle). Note: Delrin® feet are not threaded — they snap on and off.

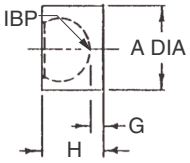

Type A
Small Foot

TYPE A — SMALL FOOT

PART NO. STEEL ZINC PLATED	PART NO. STEEL BLACK OXIDE	PART NO. STAINLESS STEEL	PART NO. DELRIN®	FITS BODY THREAD SIZE	A DIA	H	G
CL-1A-FSS	CL-1A-FSS-BO	CL-1A-FSS-S	CL-1A-FSSN	1/4-20 and M6	.187	.200	.031
CL-2A-FSS	CL-2A-FSS-BO	CL-2A-FSS-S	CL-2A-FSSN	5/16-18 and M8	.250	.255	.046
CL-3A-FSS	CL-3A-FSS-BO	CL-3A-FSS-S	CL-3A-FSSN	3/8-16 and M10	.298	.315	.053
CL-4A-FSS	CL-4A-FSS-BO	CL-4A-FSS-S	CL-4A-FSSN	1/2-13 and M12	.390	.359	.058
CL-5A-FSS	CL-5A-FSS-BO	CL-5A-FSS-S	CL-5A-FSSN	5/8-11 and M16	.500	.470	.076

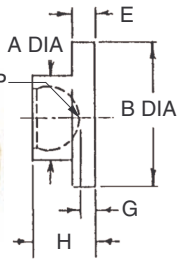

Type B
Large Foot

TYPE B — LARGE FOOT

PART NO. STEEL ZINC PLATED	PART NO. STEEL BLACK OXIDE	PART NO. STAINLESS STEEL	PART NO. DELRIN®	FITS BODY THREAD SIZE	A DIA	B DIA	E	G	H
CL-1B-FSS	CL-1B-FSS-BO	CL-1B-FSS-S	CL-1B-FSSN	1/4-20 and M6	.187	.375	.125	.131	.300
CL-2B-FSS	CL-2B-FSS-BO	CL-2B-FSS-S	CL-2B-FSSN	5/16-18 and M8	.250	.500	.156	.141	.350
CL-3B-FSS	CL-3B-FSS-BO	CL-3B-FSS-S	CL-3B-FSSN	3/8-16 and M10	.298	.562	.187	.177	.437
CL-4B-FSS	CL-4B-FSS-BO	CL-4B-FSS-S	CL-4B-FSSN	1/2-13 and M12	.390	.750	.187	.119	.420
CL-5B-FSS	CL-5B-FSS-BO	CL-5B-FSS-S	CL-5B-FSSN	5/8-11 and M16	.500	.930	.218	.121	.515

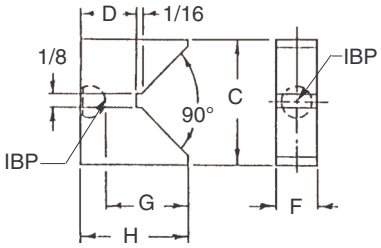

Type C
Vee Foot

TYPE C — VEE FOOT

PART NO. STEEL ZINC PLATED	PART NO. STEEL BLACK OXIDE	FITS BODY THREAD SIZE	C	D	F	G	H
CL-1C-FSS	CL-1C-FSS-BO	1/4-20 and M6	1.0	.50	.312	.706	.875
CL-2C-FSS	CL-2C-FSS-BO	5/16-18 and M8	1.0	.562	.375	.729	.938
CL-3C-FSS	CL-3C-FSS-BO	3/8-16 and M10	1.0	.625	.438	.739	1.000
CL-4C-FSS	CL-4C-FSS-BO	1/2-13 and M12	2.0	.688	.500	1.199	1.500
CL-5C-FSS	CL-5C-FSS-BO	5/8-11 and M16	2.0	.750	.625	1.231	1.625

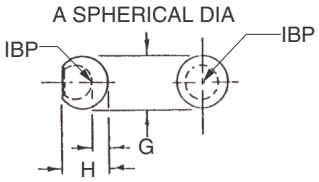

Type D
Ball Foot

TYPE D — BALL FOOT

PART NO. STEEL ZINC PLATED	PART NO. STEEL BLACK OXIDE	FITS BODY THREAD SIZE	A DIA	G	H
CL-1D-FSS	CL-1D-FSS-BO	1/4-20 and M6	.250	.051	.220
CL-2D-FSS	CL-2D-FSS-BO	5/16-18 and M8	.312	.071	.280
CL-3D-FSS	CL-3D-FSS-BO	3/8-16 and M10	.375	.064	.325
CL-4D-FSS	CL-4D-FSS-BO	1/2-13 and M12	.500	.144	.443
CL-5D-FSS	CL-5D-FSS-BO	5/8-11 and M16	.620	.137	.531

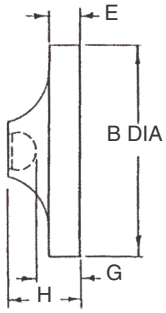

Type E
Extra-Large Foot

TYPE E — EXTRA-LARGE FOOT

PART NO. STEEL ZINC PLATED	PART NO. STEEL BLACK OXIDE	FITS BODY THREAD SIZE	B DIA	E	G	H
CL-4E-FSS	CL-4E-FSS-BO	1/2-13 and M12	1.50	1/4	.26	.56
CL-5E-FSS	CL-5E-FSS-BO	5/8-11 and M16	2.00	5/16	.31	.70

Carr Lane®
MANUFACTURING CO.
4200 Carr Lane Ct., P.O. Box 191970
St. Louis, Missouri 63119-7970 USA
Phone: 314-647-6200, FAX: 314-647-5736
Web Site: www.carrlane.com

(Rev. 7-10)

KNURLED KNOBS

STEEL: 12L14, CARBURIZED-HARDENED, BLACK OXIDE FINISH. STAINLESS STEEL: 300-SERIES, PASSIVATED

NOW ALSO AVAILABLE IN METRIC!

High-quality knurled-head knob provides a positive grip for quick finger tightening in light clamping applications. Available in steel with a black oxide finish or stainless steel.

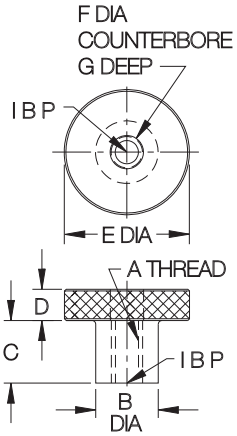

STEEL (USA)

PART NO.	A	B DIA	C	D	E DIA
CL-4-KK	1/4-20	5/8	1/2	1/4	1
CL-5-KK	5/16-18	5/8	1/2	5/16	1-1/4
CL-6-KK	3/8-16	3/4	5/8	1/2	1-1/4
CL-8-KK	1/2-13	1	3/4	1/2	1-1/2

STEEL (METRIC)

CLM-5-KK	M5	.39	.30	.16	.79
CLM-6-KK	M6	.47	.39	.20	.94
CLM-8-KK	M8	.63	.47	.24	1.18
CLM-10-KK	M10	.79	.59	.31	1.42
CLM-12-KK	M12	.79	.59	.31	1.57

STAINLESS STEEL (USA)

PART NO.	A	B DIA	C	D	E DIA	F DIA	G
CL-16312	#10-24	3/8	1/4	3/16	1/2	NONE	NONE
CL-16322			1/2			13/64	1/4
CL-16314			1/4	3/16	1	NONE	NONE
CL-16324			1/2			13/64	1/4
CL-16412	#10-32	3/8	1/4	3/16	1/2	NONE	NONE
CL-16422			1/2			13/64	1/4
CL-16414			1/4	3/16	1	NONE	NONE
CL-16424			1/2			13/64	1/4
CL-16513	1/4-20	1/2	1/4	1/4	3/4	NONE	NONE
CL-16514			1/4	1/4	1	NONE	NONE
CL-16524			1/2			17/64	1/4
CL-16534			3/4				1/2
CL-16625	5/16-18	5/8	1/2	5/16	1-1/4	21/64	1/4
CL-16635			3/4				1/2
CL-16725	3/8-16	3/4	1/2	3/8	1-1/4	25/64	1/4
CL-16735			3/4				1/2
CL-8-KK-S	1/2-13	1	3/4	1/2	1-1/2	NONE	NONE

STAINLESS STEEL (METRIC)

CLM-5-KK-S	M5	.39	.30	.16	.79	NONE	NONE
CLM-6-KK-S	M6	.47	.39	.20	.94		
CLM-8-KK-S	M8	.63	.47	.24	1.18		
CLM-10-KK-S	M10	.79	.59	.31	1.42		
CLM-12-KK-S	M12	.79	.59	.31	1.57		

ADJUSTABLE-TORQUE KNOBS

KNOB: 12L14 STEEL, BLACK OXIDE FINISH
SPRING: 17-7 PH STAINLESS STEEL

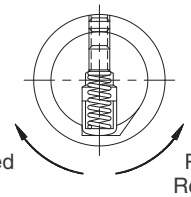

Controlled Torque Clockwise

Positive Retraction Counterclockwise

NOW ALSO AVAILABLE IN METRIC!

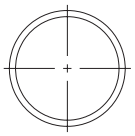

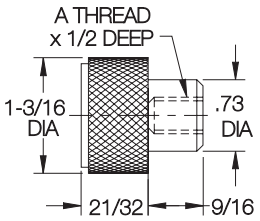

Knurled knob that exerts positive, repeatable force. Clockwise, the knob declutches and turns freely when you reach the desired torque. Counterclockwise, the knob locks for positive retraction. Can be used as a controlled-torque nut, or as a thumb screw by installing a custom-made screw in the tapped hole.

To set desired force, first remove the outer cover screw at the side of the knob, to expose the adjustment screw. Next, insert a hex wrench to turn the adjustment screw until desired torque is achieved. Reinstall the outer cover screw when finished. Torque can be adjusted from 3 to 6 inch-lbs, resulting in a contact force of 10 to 125 lbs, but these values are approximate. Force can vary +/- 30% depending on lubrication and other operating conditions.

USA

PART NO.	A	ADJUSTMENT RANGE TORQUE (IN.-LBS)	ADJUSTMENT RANGE END FORCE (LBS)*
CL-4-ATK	1/4-20	3-6	10-125
CL-5-ATK	5/16-18		10-125
CL-6-ATK	3/8-16		10-125
CL-8-ATK	1/2-13		10-125

METRIC

CLM-6-ATK	M6	3-6	10-125
CLM-8-ATK	M8		10-125
CLM-10-ATK	M10		10-125
CLM-12-ATK	M12		10-125

Carr Lane®
MANUFACTURING CO.
4200 Carr Lane Ct., P.O. Box 191970
St. Louis, Missouri 63119-7970 USA
Phone: 314-647-6200, FAX: 314-647-5736
Web Site: www.carrlane.com

(Rev. 6-06)

ADJUSTABLE-TORQUE THUMB SCREWS

SCREW: 12L14 STEEL, CARBURIZED-HARDENED, BLACK OXIDE FINISH
KNOB: 12L14 STEEL, BLACK OXIDE FINISH
SPRING: MUSIC WIRE

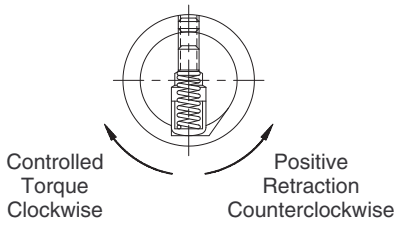

Knurled-head thumb screw that exerts positive, repeatable force. Clockwise, the knob declutches and turns freely when you reach the desired torque. Counterclockwise, the knob locks for positive retraction. Adjustable-Torque Thumb Screws are furnished with your choice of swivel foot, and a Knurled Check Nut.

To set desired force, first remove the outer cover screw at the side of the knob, to expose the adjustment screw. Next, insert a hex wrench to turn the adjustment screw until desired torque is achieved. Reinstall the outer cover screw when finished. Torque can be adjusted from 3 to 6 inch-lbs, resulting in a contact force of 10 to 125 lbs, but these values are approximate. Force can vary +/- 30% depending on lubrication and other operating conditions.

Choice of four foot types. Adjustable-Torque Thumb Screws use our patented left-hand-thread swivel-foot system. The ball end of the body screws into the foot for easy installation and removal. Once the ball threads pass beyond the foot threads, the foot can rotate and pivot freely (20° total angle). Foot threads are left-hand to positively prevent accidental backout during use. Delrin® feet are optional for types A and B. To order with a Delrin® foot, add "N" to the part number, e.g. CL-415-TSAN. Note: Delrin® feet are not threaded – they snap on and off.

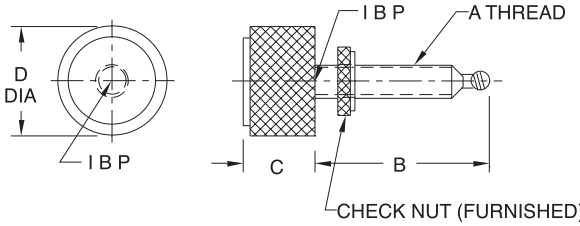

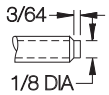

DOG POINT
(#10 and M5 only)

TYPE A
FOOT

TYPE B
FOOT

TYPE C
FOOT

TYPE D
FOOT

USA

PART NO.					A	B	C	D DIA	ADJUSTMENT RANGE	
DOG POINT	A FOOT	B FOOT	C FOOT	D FOOT					TORQUE (IN.-LBS)	END FORCE (LBS)*
CL-312-TS	—	—	—	—	#10-24	1-1/4	21/32	15/16	3-6	10-125
CL-312A-TS	—	—	—	—	#10-32					
—	CL-415-TSA	CL-415-TSB	CL-415-TSC	CL-415-TSD	1/4-20	1-1/2				
—	CL-425-TSA	CL-425-TSB	CL-425-TSC	CL-425-TSD		2-1/2				
—	CL-517-TSA	CL-517-TSB	CL-517-TSC	CL-517-TSD	5/16-18	1-3/4				
—	CL-527-TSA	CL-527-TSB	CL-527-TSC	CL-527-TSD		2-3/4				
—	CL-620-TSA	CL-620-TSB	CL-620-TSC	CL-620-TSD	3/8-16	2	21/32	1-3/16	3-6	10-125
—	CL-630-TSA	CL-630-TSB	CL-630-TSC	CL-630-TSD		3				
—	CL-820-TSA	CL-820-TSB	CL-820-TSC	CL-820-TSD	1/2-13	2				
—	CL-830-TSA	CL-830-TSB	CL-830-TSC	CL-830-TSD		3				
—	CL-1020-TSA	CL-1020-TSB	CL-1020-TSC	CL-1020-TSD	5/8-11	2				
—	CL-1030-TSA	CL-1030-TSB	CL-1030-TSC	CL-1030-TSD		3				

METRIC

PART NO.					A	B	C	D DIA	ADJUSTMENT RANGE	
DOG POINT	A FOOT	B FOOT	C FOOT	D FOOT					TORQUE (IN.-LBS)	END FORCE (LBS)*
CLM-5-TS	—	—	—	—	M5	1.18	21/32	15/16	3-6	10-125
—	CLM-6-TSA	CLM-6-TSB	CLM-6-TSC	CLM-6-TSD	M6	2.53				
—	CLM-8-TSA	CLM-8-TSB	CLM-8-TSC	CLM-8-TSD	M8	2.71				
—	CLM-10-TSA	CLM-10-TSB	CLM-10-TSC	CLM-10-TSD	M10	2.90	21/32	1-3/16	3-6	10-125
—	CLM-12-TSA	CLM-12-TSB	CLM-12-TSC	CLM-12-TSD	M12	2.89				
—	CLM-16-TSA	CLM-16-TSB	CLM-16-TSC	CLM-16-TSD	M16	2.88				

* End force can vary +/-30% depending on lubrication and other operating conditions.

Carr Lane®
MANUFACTURING CO.
4200 Carr Lane Ct., P.O. Box 191970
St. Louis, Missouri 63119-7970 USA
Phone: 314-647-6200, FAX: 314-647-5736
Web Site: www.carrlane.com

(Rev. 4-08)

KNURLED KNOBS

KNOB: BLACK PHENOLIC PLASTIC OR THERMOPLASTIC, WITH BRASS INSERT
STUD: MILD STEEL, ZINC PLATED CLEAR CHROMATE

5/16-18 CL-642-KTK
3/8-16 CL-652-KTK
M8 CLM-642-KTK
M10 CLM-652-KTK

1/4-20 CL-532-KTK
5/16-18 CL-542-KTK
M6 CLM-532-KTK
M8 CLM-542-KTK

#10-32 CL-424-KTK
1/4-20 CL-432-KTK
M5 CLM-422-KTK
M6 CLM-432-KTK

#10-32 CL-324-KTK
1/4-20 CL-332-KTK
M5 CLM-322-KTK

#10-32 CL-124-KTK

#6-32 CL-202-KTK
#8-32 CL-212-KTK
#10-32 CL-224-KTK
1/4-20 CL-232-KTK
5/16-18 CL-242-KTK

Thermoplastic—Tapped

Phenolic — Tapped

1/4-20 X 1/2 CL-532-KTK-8
5/16-18 X 1 CL-542-KTK-16
M8 X 25mm CLM-542-KTK-25

1/4-20 X 1 CL-432-KTK-16
M6 X 25mm CLM-432-KTK-25

#8-32 X 1/2 CL-312-KTK-8
#10-32 X 1/2 CL-324-KTK-8
#10-32 X 1 CL-324-KTK-16
1/4-20 X 1/2 CL-332 KTK-8
M5 X 20mm CLM-322-KTK-20

Phenolic — Stud Type

3/8-16 X 1 CL-652-KTK-16
M10 X 25mm CLM-652-KTK-25

Phenolic — Stud Type Short Hub

3/8-16 X 1 CL-656-KTK-16

#6-32 X 3/4 CL-406-KTK-12
1/4-20 X 3/4 CL-436-KTK-12

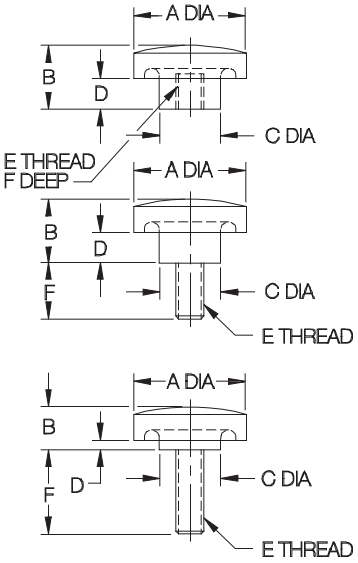

NOW ALSO AVAILABLE IN METRIC!

Knurled head provides a positive grip for finger tightening in light clamping applications. Choice of six knob sizes. Molded-in brass insert provides superior thread strength. Also available with a molded-in clamping stud. Non-standard thread sizes, other lengths of molded-in studs, or special colors are available in quantities of 250 and above. Note: Catalog photos are actual size.

THERMOPLASTIC — TAPPED (USA)

PART NO.	A DIA	B	C DIA	D	E	F
CL-202-KTK	3/4	15/32	5/8	1/4	#6-32	5/16
CL-212-KTK					#8-32	
CL-224-KTK					#10-32	
CL-232-KTK					1/4-20	
CL-242-KTK					5/16-18	

PHENOLIC — TAPPED (USA & METRIC)

CL-124-KTK	5/8	9/16	1/2	—	#10-32	5/16
CL-324-KTK	3/4	17/32	7/16	1/16	#10-32	5/16
CL-332-KTK					1/4-20	
CLM-322-KTK					M5	
CL-424-KTK	1	21/32	5/8	5/16	#10-32	5/16
CL-432-KTK					1/4-20	
CLM-422-KTK					M5	
CLM-432-KTK					M6	3/8
CL-532-KTK	1-3/8	25/32	3/4	3/8	1/4-20	7/16
CL-542-KTK					5/16-18	
CLM-532-KTK					M6	
CLM-542-KTK					M8	
CL-642-KTK	1-7/8	1	1	1/2	5/16-18	7/16
CL-652-KTK					3/8-16	1/2
CLM-642-KTK					M8	7/16
CLM-652-KTK					M10	1/2

PHENOLIC — STUD TYPE (USA & METRIC)

CL-312-KTK-8	3/4	17/32	7/16	1/16	#8-32	1/2
CL-324-KTK-8					#10-32	
CL-324-KTK-16						1
CL-332-KTK-8					1/4-20	1/2
CLM-322-KTK-20					M5	.79
CL-432-KTK-16	1	21/32	5/8	5/16	1/4-20	1
CLM-432-KTK-25					M6	.98
CL-532-KTK-8	1-3/8	25/32	3/4	3/8	1/4-20	1/2
CL-542-KTK-16					5/16-18	1
CLM-542-KTK-25					M8	.98
CL-652-KTK-16	1-7/8	1	1	1/2	3/8-16	1
CLM-652-KTK-25					M10	.98

PHENOLIC — STUD TYPE, SHORT HUB (USA)

CL-406-KTK-12	1	13/32	1/2	1/16	#6-32	3/4
CL-436-KTK-12					1/4-20	
CL-656-KTK-16	1-7/8	3/4	1	1/4	3/8-16	1

Carr Lane MANUFACTURING CO.
4200 Carr Lane Ct., P.O. Box 191970
St. Louis, Missouri 63119-7970 USA
Phone: 314-647-6200, FAX: 314-647-5736
Web Site: www.carrlane.com

(Rev. 8-92)

HAND-WHEEL MODIFICATIONS

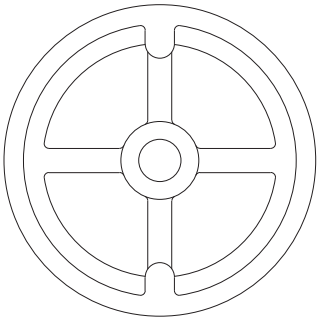

Bored Hole

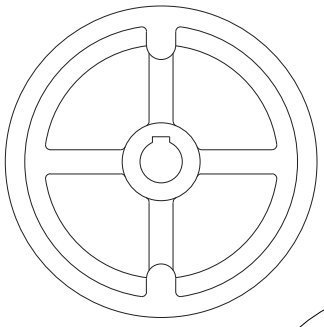

Bored Hole with Keyway

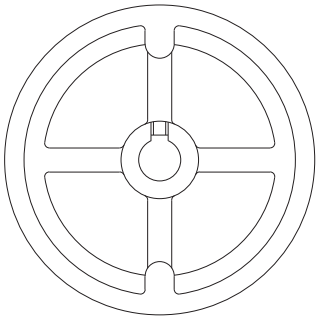

Bored Hole with Setscrew Hole over Keyway

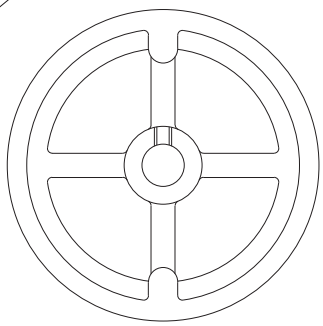

Bored Hole with Setscrew Hole

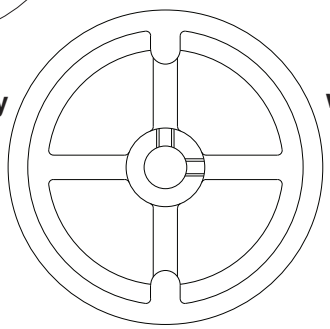

Bored Hole with 2 Setscrew Holes at 90°

BORE SIZE

HAND WHEEL DIA	STANDARD BORE SIZE (+0/+.002)	MAXIMUM BORE SIZE (HWAF, HWAFA, HWSF, HWSFA)	MAXIMUM BORE SIZE (HWAFI, HWSFI)
4	.375	.750	.375
5	.375	1.000	.500
6	.500	1.125	.500
8	.625	1.375	.875
10	.625	1.500	1.000
12	.750	2.000	1.500
14	1.000	2.000	1.500

KEYWAYS & SETSCREWS

BORE SIZE	STANDARD SQUARE KEYWAY	STANDARD SETSCREW HOLE
.375-.438	3/32	#10-32
.439-.562	1/8	#10-32
.563-.875	3/16	1/4-20
.876-1.250	1/4	5/16-18
1.251-1.375	5/16	3/8-16
1.376-1.750	3/8	3/8-16
1.751-2.000	1/2	1/2-13

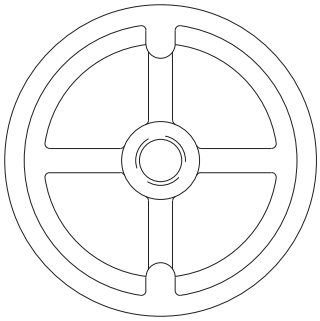

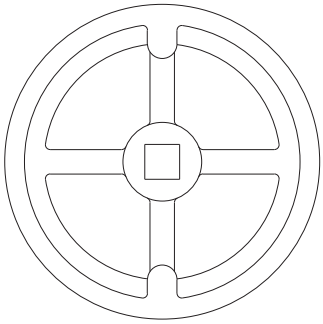

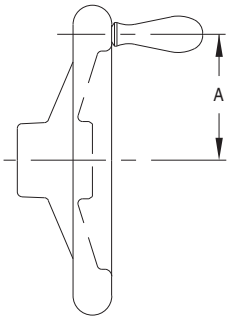

TAPPED HOLE

HAND WHEEL DIA	AVAILABLE THREAD SIZES (HWAF, HWAFA, HWSF, HWSFA)	AVAILABLE THREAD SIZES (HWAFI, HWSFI)
4	3/8 to 3/4, M10 to M20	3/8, M10
5	3/8 TO 1, M10 to M24	3/8 to 1/2, M10 to M12
6	1/2 to 1-1/4, M12 to M30	1/2, M12
8	1/2 to 1-3/8, M12 to M36	1/2 to 7/8, M12 to M22
10	5/8 to 1-1/2, M16 to M36	5/8 to 1, M16 to M24
12	3/4 to 2, M20 to M48	3/4 to 1-1/2, M20 to M36
14	1 to 2, M24 to M48	1 to 1-1/2, M24 to M36

SQUARE HOLE

HAND WHEEL DIA	AVAILABLE SQUARE HOLE SIZES (HWAF, HWAFA, HWSF, HWSFA)	AVAILABLE SQUARE HOLE SIZES (HWAFI, HWSFI)
4	1/2	—
5	1/2, 5/8	—
6	1/2, 5/8	—
8	1/2, 5/8	1/2, 5/8
10	1/2, 5/8	1/2, 5/8
12	1/2, 5/8	1/2, 5/8
14	1/2, 5/8	1/2, 5/8

HANDLE INSTALLATION

HAND WHEEL DIA	A (HWAF, HWAFA, HWSF, HWSFA, HWAFI, HWSFI)
4	1-9/16
5	2
6	2-1/2
8	3-1/4
10	4-3/16
12	5-1/8
14	6-1/8

Carr Lane®
MANUFACTURING CO.
4200 Carr Lane Ct., P.O. Box 191970
St. Louis, Missouri 63119-7970 USA
Phone: 314-647-6200, FAX: 314-647-5736
Web Site: www.carrlane.com

(Rev. 7-03)

HAND WHEELS

CAST IRON PER ASTM-A48 CLASS 30 OR 319 ALUMINUM ALLOY

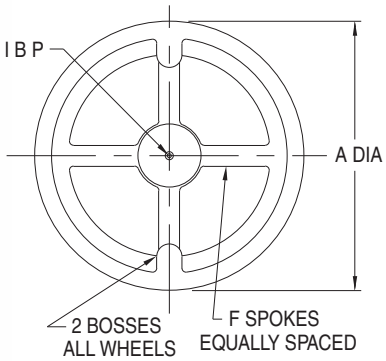

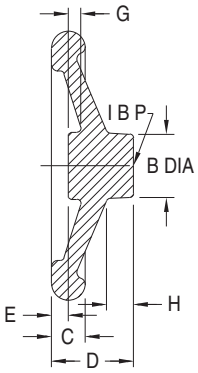

Cast Iron HWAF

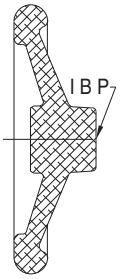

Aluminum HWAFA

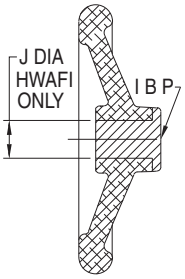

Aluminum with Cast Iron Insert HWAFI

Angled-Spoke Rounded Design Cast Iron or Aluminum

Utility-grade Hand Wheels that can be easily customized for any application. See page 79 for factory modifications available. Wide range of sizes from 4 to 14 inches in diameter. Choose from three material types: cast iron, for maximum strength; aluminum, for light weight; or aluminum with a cast iron hub insert, to combine both benefits.

ANGLED SPOKES

PART NO. CAST IRON	PART NO. ALUMINUM	PART NO. ALUMINUM W/ INSERT	A DIA	B DIA	C	D	E	F	G	H	J DIA	HANDLE SIZE	HANDLE SOLID	HANDLE REVOLVING
CL-4-HWAF	CL-4-HWAFA	CL-4-HWAFI	4	1-1/4	5/8	1-11/16	1/8	4	9/32	3/4	11/16	SIZE 2	SEE PAGE 92	SEE PAGES 93-95
CL-5-HWAF	CL-5-HWAFA	CL-5-HWAFI	5	1-1/2	3/4	1-7/8	3/8		5/16		1			
CL-6-HWAF	CL-6-HWAFA	CL-6-HWAFI	6	1-5/8		2	13/32		3/8	13/16	1	SIZE 4		
CL-8-HWAF	CL-8-HWAFA	CL-8-HWAFI	8	1-7/8	1	2-7/16	1/2				1-3/8			
CL-10-HWAF	CL-10-HWAFA	CL-10-HWAFI	10	2-1/4		3-1/32	11/16	8	7/16	1-1/16	1-3/4	SIZE 5		
CL-12-HWAF	CL-12-HWAFA	CL-12-HWAFI	12	3		4-3/32	1-1/16			1-3/4	2-1/2			
CL-14-HWAF	CL-14-HWAFA	CL-14-HWAFI	14			5-1/8	1-7/32		9/16	2-3/16				

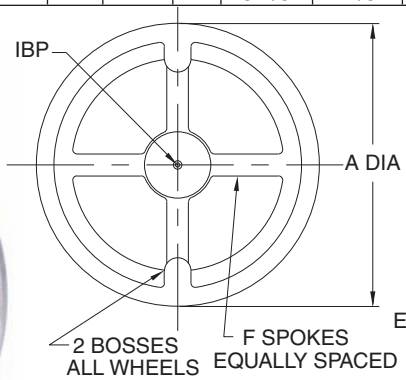

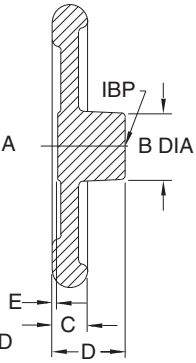

Cast Iron HWSF

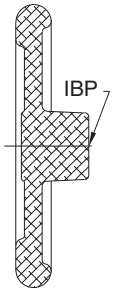

Aluminum HWSFA

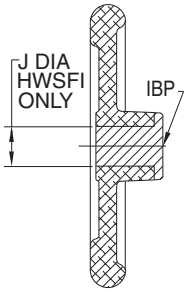

Aluminum with Cast Iron Insert HWSFI

Straight-Spoke Rounded Design Cast Iron or Aluminum

Same as the Hand Wheels shown above, except with straight spokes for a flatter profile.

STRAIGHT SPOKES

PART NO. CAST IRON	PART NO. ALUMINUM	PART NO. ALUMINUM W/ INSERT	A DIA	B DIA	C	D	E	F	J DIA	HANDLE SIZE	HANDLE SOLID	HANDLE REVOLVING
CL-4-HWSF	CL-4-HWSFA	CL-4-HWSFI	4	1-1/4	5/8	1-11/16	1/8	4	11/16	SIZE 2	SEE PAGE 92	SEE PAGES 93-95
CL-5-HWSF	CL-5-HWSFA	CL-5-HWSFI	5	1-1/2	3/4				1			
CL-6-HWSF	CL-6-HWSFA	CL-6-HWSFI	6	1-5/8		1-13/16			1	SIZE 4		
CL-8-HWSF	CL-8-HWSFA	CL-8-HWSFI	8	1-7/8	1	2-1/16	5/32		1-3/8			
CL-10-HWSF	CL-10-HWSFA	CL-10-HWSFI	10	2-1/4		2-1/2		8	1-3/4	SIZE 5		
CL-12-HWSF	CL-12-HWSFA	CL-12-HWSFI	12	3		3-1/4	1/8		2-1/2			
CL-14-HWSF	CL-14-HWSFA	CL-14-HWSFI	14			3-3/4	3/32					

MANUFACTURING CO.
4200 Carr Lane Ct., P.O. Box 191970
St. Louis, Missouri 63119-7970 USA
Phone: 314-647-6200, FAX: 314-647-5736
Web Site: www.carrlane.com

(Rev. 10-05)

HAND WHEELS

CAST IRON, CHROME PLATED

High-quality, modern-design Hand Wheel. Beautiful chrome-plated finish with a polished rim. Hand Wheel is bored to the standard shaft diameter for its size, and is also tapped for a standard Solid or Revolving Handle. Order handle separately…see table below for matching rounded-design handle (stainless steel), or pages 86-89 for additional styles. To use without a handle, see table below to order a matching Handle Plug, for the tapped hole (chrome-plated steel).

Angled-Spoke Rounded Design
Cast Iron
Chrome Plated with Polished Rim

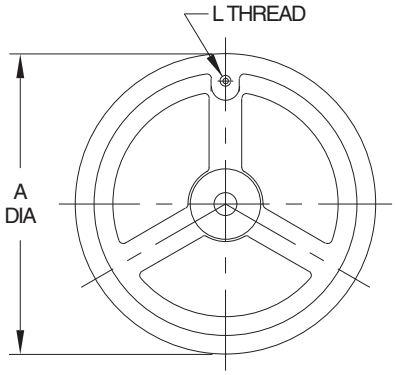

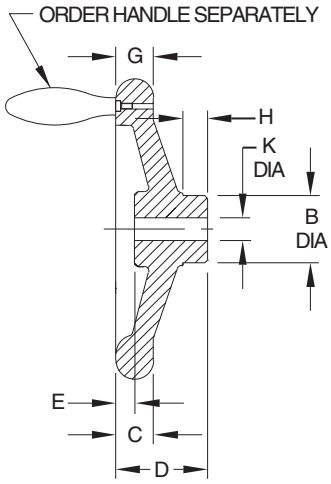

Hand wheels up through 8" diameter have three spokes; sizes 10" and larger have five spokes. Sizes 8" and larger have a wavy inside rim for better gripping.

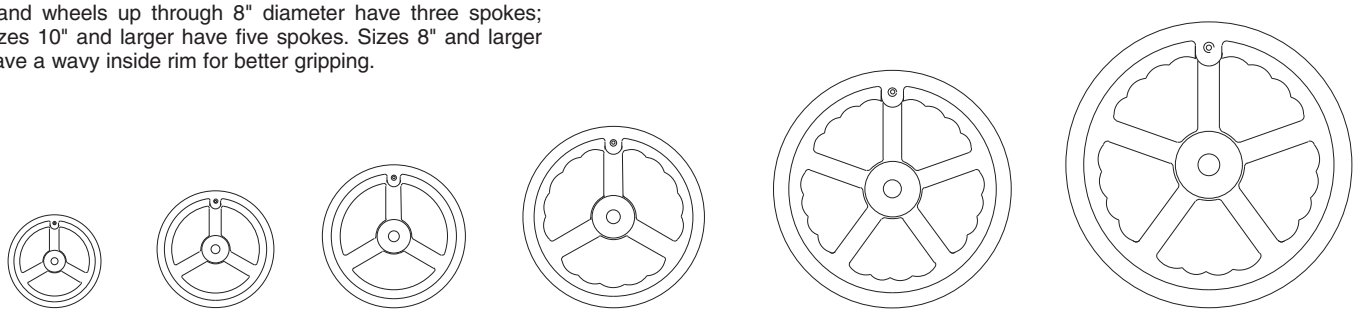

4" **5"** **6"** **8"** **10"** **12"**

ORDER HAND WHEEL AND SOLID/REVOLVING HANDLE SEPARATELY

PART NO. WITH TAPPED HOLE FOR HANDLE	A DIA	B DIA	C	D	E	H	K DIA	L	MATCHING HANDLE			HANDLE PLUG
									SIZE	SOLID	REVOLVING	
CL-40-HWAR	4	1-1/8	9/16	1-1/2	7/16	1/2	3/8	1/4-20	SIZE 2	CL-250-SH-S	CL-250-RH-S	CL-2-HW-PLUG
CL-50-HWAR	5	1-1/4	19/32	1-5/8								
CL-60-HWAR	6	1-3/8	21/32	1-13/16	9/16	9/16	1/2	5/16-18	SIZE 3	CL-350-SH-S	CL-350-RH-S	CL-3-HW-PLUG
CL-80-HWAR	8	1-21/32	7/8	2-3/16	11/16	5/8	5/8	3/8-16	SIZE 4	CL-450-SH-S	CL-450-RH-S	CL-4-HW-PLUG
CL-100-HWAR	10	1-7/8	15/16	2-3/8	23/32	3/4						
CL-120-HWAR	12	2-5/32	1	2-1/2	23/32	7/8	3/4	1/2-13	SIZE 5	CL-550-SH-S	CL-550-RH-S	CL-5-HW-PLUG

Carr Lane®
MANUFACTURING CO.
4200 Carr Lane Ct., P.O. Box 191970
St. Louis, Missouri 63119-7970 USA
Phone: 314-647-6200, FAX: 314-647-5736
Web Site: www.carrlane.com

(Rev. 3-07)

HAND WHEELS

ALUMINUM, GRAVITY DIE CAST

High-quality, modern-design aluminum Hand Wheel with two spokes. Rim is machined and highly polished on all sides. Spokes are shot blasted to a satin finish. These Hand Wheels are bored to the standard shaft diameter for their size, and are tapped for a Solid or Revolving Handle (also available without tapped hole for handle). Rim is concentric and square to the bore. Order Solid or Revolving Handle separately. Matching square-design stainless steel handles are recommended.

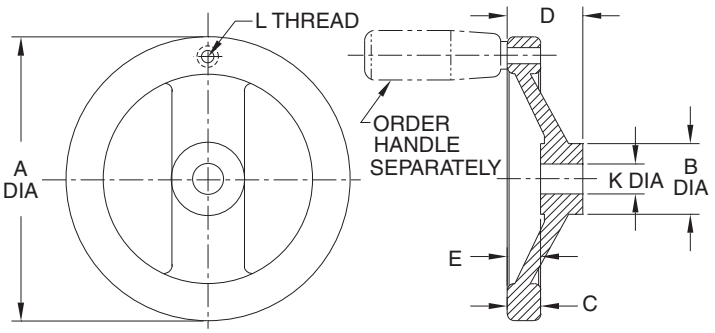

TWO-SPOKE SQUARE DESIGN — ALUMINUM

PART NO. WITH TAPPED HOLE FOR HANDLE	PART NO. WITHOUT TAPPED HOLE FOR HANDLE	A DIA	B DIA	C	D	E	K DIA	L	HANDLE SIZE	HANDLE SOLID	HANDLE REVOLVING
CL-50-HWTS-A	CL-5-HWTS-A	4.92	1.22	.59	1.30	.59	.375	1/4-20	SIZE 2	SEE PAGE 92	SEE PAGES 93-95
CL-60-HWTS-A	CL-6-HWTS-A	6.30	1.42	.71	1.54	.75	.500	5/16-18	SIZE 3		
CL-80-HWTS-A	CL-8-HWTS-A	7.87	1.65	.81	1.77	.83	.625	3/8-16	SIZE 4		
CL-100-HWTS-A	CL-10-HWTS-A	9.84	1.89	.91	2.01	.91					

High-quality, modern-design aluminum Hand Wheel. Rim is machined and highly polished on all sides. Solid inner dish is shot-blasted to a satin finish. These Hand Wheels are bored to the standard shaft diameter for their size, and are tapped for a Solid or Revolving Handle (also available without tapped hole for handle). Rim is concentric and square to the bore. Order Solid or Revolving Handle separately. Matching square-design stainless steel handles are recommended.

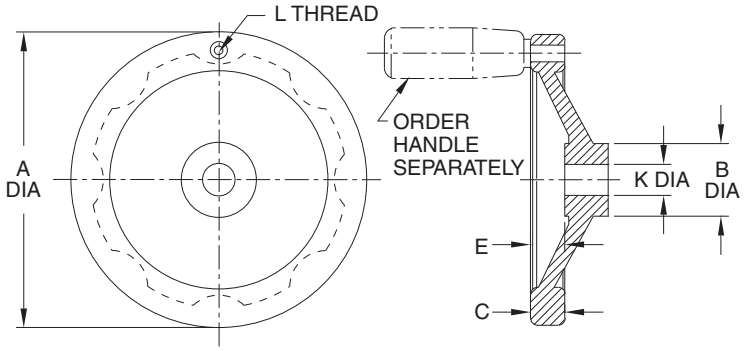

SOLID SQUARE DESIGN — ALUMINUM

PART NO. WITH TAPPED HOLE FOR HANDLE	PART NO. WITHOUT TAPPED HOLE FOR HANDLE	A DIA	B DIA	C	D	E	K DIA	L	HANDLE SIZE	HANDLE SOLID	HANDLE REVOLVING
CL-40-HWSS-A	CL-4-HWSS-A	3.94	1.10	.55	1.18	.51	.375	1/4-20	SIZE 2	SEE PAGE 92	SEE PAGES 93-95
CL-50-HWSS-A	CL-5-HWSS-A	4.92	1.22	.59	1.30	.59					
CL-60-HWSS-A	CL-6-HWSS-A	6.30	1.42	.71	1.54	.75	.500	5/16-18	SIZE 3		
CL-80-HWSS-A	CL-8-HWSS-A	7.87	1.65	.81	1.77	.83	.625	3/8-16	SIZE 4		
CL-100-HWSS-A	CL-10-HWSS-A	9.84	1.89	.91	2.01	.91					

Carr Lane®
MANUFACTURING CO.
4200 Carr Lane Ct., P.O. Box 191970
St. Louis, Missouri 63119-7970 USA
Phone: 314-647-6200, FAX: 314-647-5736
Web Site: www.carrlane.com

(Rev. 4-07)

HAND WHEELS

300-SERIES STAINLESS STEEL

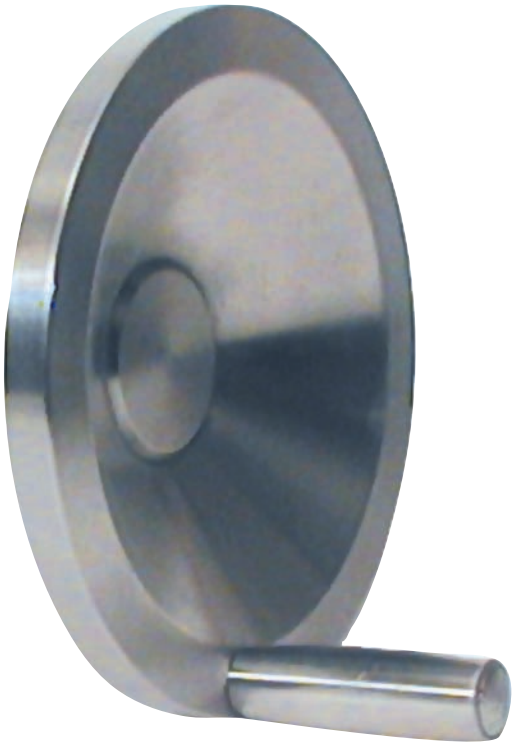

High-quality, stainless steel Hand Wheel. Modern square design, completely machined to a fine finish from solid 300-series stainless steel. This precision Hand Wheel is extremely strong, yet lightweight. Stainless steel Hand Wheels are center drilled, and also tapped for a standard Solid or Revolving Handle. Order handle separately…see table below for matching square-design handle (stainless steel), or pages 92-95 for additional styles.

Solid Square Design
Stainless Steel

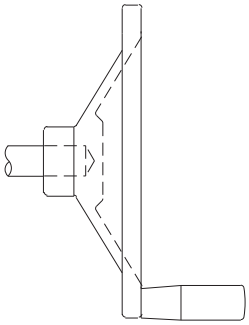

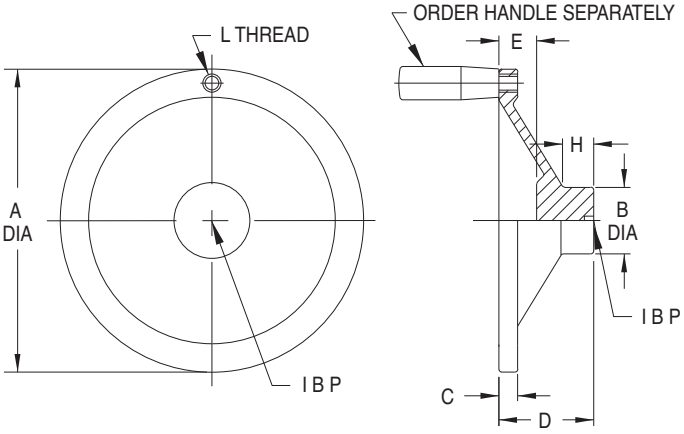

These Hand Wheels can be bored with a blind hole to hide the shaft, for an extremely attractive finished appearance.

ORDER HAND WHEEL AND SOLID/REVOLVING HANDLE SEPARATELY

PART NO. WITH TAPPED HOLE FOR HANDLE	A DIA	B DIA	C	D	E	H	L	MATCHING HANDLE		
								SIZE	SOLID	REVOLVING
CL-30-HWSS-S	3	.87	1/4	1.10	.43	3/8	1/4-20	SIZE 1	CL-100-SH-S	CL-100-RH-S
CL-40-HWSS-S	4	1.02	5/16	1.25	.54	7/16				
CL-60-HWSS-S	6	1.50	1/2	1.50	.63	1/2	1/4-20	SIZE 2	CL-200-SH-S	CL-200-RH-S
CL-80-HWSS-S	8	1.80	9/16	1.80	.85	5/8	5/16-18	SIZE 3	CL-300-SH-S	CL-300-RH-S
CL-100-HWSS-S	10	2	5/8	2	.95	3/4	3/8-16	SIZE 4	CL-400-SH-S	CL-400-RH-S

Carr Lane®
MANUFACTURING CO.
4200 Carr Lane Ct., P.O. Box 191970
St. Louis, Missouri 63119-7970 USA
Phone: 314-647-6200, FAX: 314-647-5736
Web Site: www.carrlane.com

(Rev. 3-07)

HAND WHEELS

BODY: BLACK FIBER-REINFORCED NYLON THERMOPLASTIC
HUB: MILD STEEL, ZINC PLATED CLEAR CHROMATE

Angled-Spoke Square Design Thermoplastic with Revolving Handle

Angled-Spoke Square Design Thermoplastic with Foldable Revolving Handle

High-quality, modern-design thermoplastic Hand Wheel with three spokes. Molded-in steel hub, blank with a pilot hole. Available with either a Revolving Handle, a Foldable Revolving Handle, or a plain rim without a handle. Matte black fiber-reinforced nylon thermoplastic (textured surface for secure gripping, excellent impact resistance, operating temperatures to 230°F).

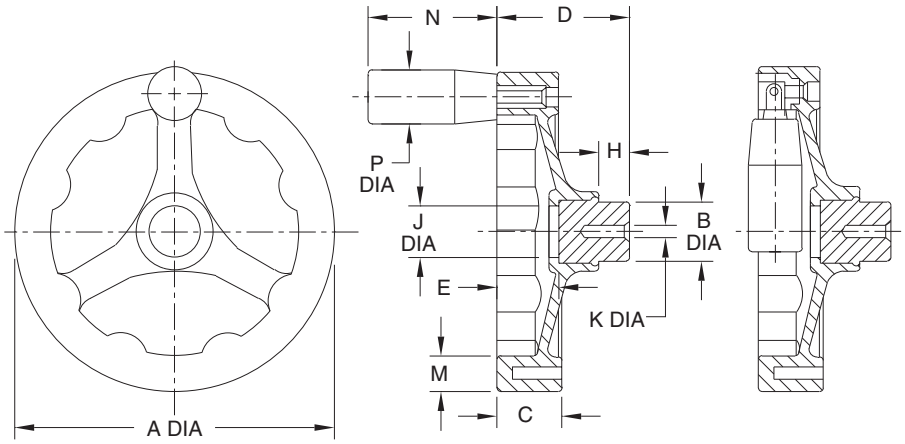

PART NO. WITH REVOLVING HANDLE	PART NO. WITH FOLDABLE REVOLVING HANDLE	PART NO. WITHOUT HANDLE (NOT TAPPED)	A DIA	B DIA	C	D	E	H	J DIA	K DIA	M	N	P DIA
CL-41-HWAS-P	CL-42-HWAS-P	CL-4-HWAS-P	3.94	.94	.79	1.69	.75	.47	.71	.157	.59	1.97	.83
CL-51-HWAS-P	CL-52-HWAS-P	CL-5-HWAS-P	4.92		.94	2.01	.91		.79	.236	.67		
CL-61-HWAS-P	CL-62-HWAS-P	CL-6-HWAS-P	6.30	1.26	1.10	2.40	1.18	.59	1.18	.236	.79	2.76	.91
CL-81-HWAS-P	CL-82-HWAS-P	CL-8-HWAS-P	7.87	1.57	1.26	2.87	1.30		1.38		.91	3.54	1.02

Carr Lane®
MANUFACTURING CO.
4200 Carr Lane Ct., P.O. Box 191970
St. Louis, Missouri 63119-7970 USA
Phone: 314-647-6200, FAX: 314-647-5736
Web Site: www.carrlane.com

(Rev. 3-07)

HAND WHEELS

BODY: MATTE BLACK HIGH-IMPACT THERMOPLASTIC
HUB: MILD STEEL, BLACK OXIDE FINISH
CENTER TRIM COVER: ALUMINUM, ANODIZED

Two-Spoke Rounded Design Thermoplastic with Revolving Handle

Two-Spoke Rounded Design Thermoplastic with Foldable Revolving Handle

ELESA ORIGINAL DESIGN

High-quality, modern-design thermoplastic Hand Wheel with two spokes. Molded-in steel hub. These Hand Wheels are bored to the standard shaft diameter for their size. Available with either a Revolving Handle, a Foldable Revolving Handle, or a plain rim without a handle. Matte black high-impact thermoplastic (textured surface for secure gripping, excellent impact resistance, operating temperatures to 230°F).

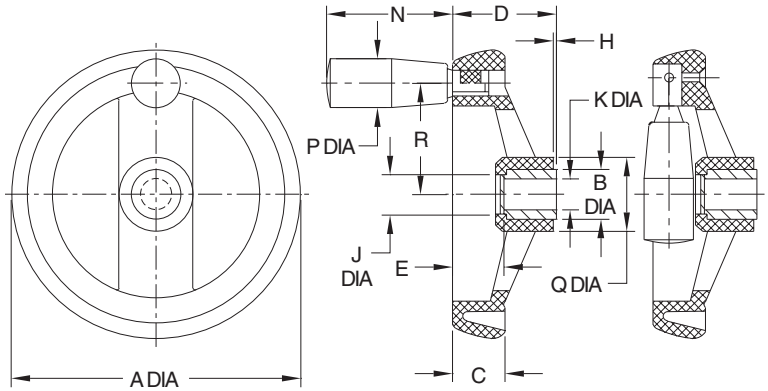

PART NO. WITH REVOLVING HANDLE	PART NO. WITH FOLDABLE REVOLVING HANDLE	PART NO. WITHOUT HANDLE (NOT TAPPED)	A DIA	B HUB DIA	C	D	E	H	J DIA	K BORE DIA	N	P DIA	Q DIA	R
CL-41-HWTR-P	CL-42-HWTR-P	CL-4-HWTR-P	3.90	.71	.79	1.46	.79	.01	.67	.375	1.97	.83	.98	1.45
CL-51-HWTR-P	CL-52-HWTR-P	CL-5-HWTR-P	4.88	.87	.87	1.73	.87		.83	.375	2.56	.91	1.22	1.83
CL-61-HWTR-P	CL-62-HWTR-P	CL-6-HWTR-P	6.30	1.02	.98	2.01	.94		.98	.500			1.57	2.56
CL-81-HWTR-P	CL-82-HWTR-P	CL-8-HWTR-P	7.87	1.18	1.10	2.40	1.06		1.22	.625	3.15	1.02	1.97	3.30

Carr Lane®
MANUFACTURING CO.
4200 Carr Lane Ct., P.O. Box 191970
St. Louis, Missouri 63119-7970 USA
Phone: 314-647-6200, FAX: 314-647-5736
Web Site: www.carrlane.com

(Rev. 6-05)

HAND WHEELS

BODY: MATTE BLACK FIBER-REINFORCED NYLON THERMOPLASTIC
HUB: MILD STEEL, ZINC PLATED CLEAR CHROMATE

Solid Square Design Thermoplastic with Revolving Handle

Solid Square Design Thermoplastic with Foldable Revolving Handle

High-quality, modern-design thermoplastic Hand Wheel with two spokes. Molded-in steel hub. These Hand Wheels are bored to the standard shaft diameter for their size. Available with either a Revolving Handle, a Foldable Revolving Handle, or a plain rim without a handle. Matte black high-impact thermoplastic (textured surface for secure gripping, excellent impact resistance, operating temperatures to 230°F).

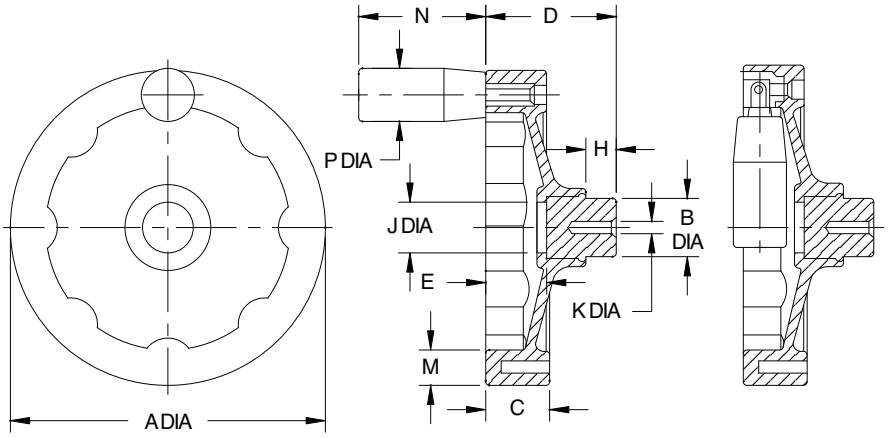

PART NO. WITH REVOLVING HANDLE	PART NO. WITH FOLDABLE REVOLVING HANDLE	PART NO. WITHOUT HANDLE (NOT TAPPED)	A DIA	B DIA	C	D	E	H	J DIA	K DIA	M	N	P DIA
CL-41-HWSS-P	CL-42-HWSS-P	CL-4-HWSS-P	3.94	.94	.79	1.81	.87	.47	.71	.157	.59	1.97	.83
CL-51-HWSS-P	CL-52-HWSS-P	CL-5-HWSS-P	4.92		.94	2.01	.91		.79	.236	.67		
CL-61-HWSS-P	CL-62-HWSS-P	CL-6-HWSS-P	6.30	1.26	1.10	2.40	1.18	.59	1.18	.236	.79	2.76	.91
CL-81-HWSS-P	CL-82-HWSS-P	CL-8-HWSS-P	7.87	1.57	1.26	2.91	1.34		1.38		.94	3.54	1.02

Carr Lane®
MANUFACTURING CO.
4200 Carr Lane Ct., P.O. Box 191970
St. Louis, Missouri 63119-7970 USA
Phone: 314-647-6200, FAX: 314-647-5736
Web Site: www.carrlane.com

(Rev. 3-07)

HAND WHEELS

BODY: MATTE BLACK HIGH-IMPACT THERMOPLASTIC
HUB: MILD STEEL, BLACK OXIDE FINISH
CENTER TRIM COVER: GRAY THERMOPLASTIC, PUSH FIT

Solid Disk Design Thermoplastic with Revolving Handle

Solid Disk Design Thermoplastic with Foldable Revolving Handle

ELESA ORIGINAL DESIGN

High-quality, modern-design, solid-disk thermoplastic Hand Wheel. Molded-in steel hub. These Hand Wheels are bored to the standard shaft diameter for their size. Available with either a Revolving Handle, a Foldable Revolving Handle, or a plain rim without a handle. Matte black high-impact thermoplastic (textured surface for secure gripping, excellent impact resistance, operating temperatures to 230°F).

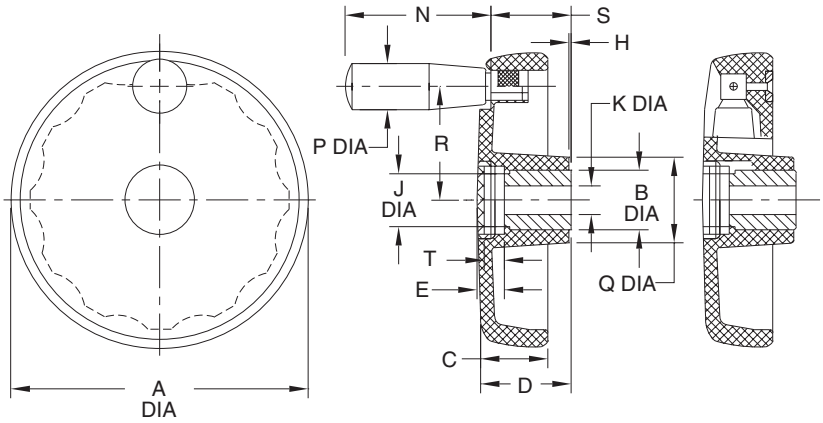

PART NO. WITH REVOLVING HANDLE	PART NO. WITH FOLDABLE REVOLVING HANDLE	A DIA	B HUB DIA	C	D	E	H	J DIA	K BORE DIA	N	P DIA	Q DIA	R	S	T
CL-41-HWSD-P	CL-42-HWSD-P	4.02	.87	.94	1.34	.47	.01	.79	.375	1.97	.83	1.18	1.53	1.18	.35
CL-51-HWSD-P	CL-52-HWSD-P	4.92	1.02	1.10	1.54	.47		.94	.375	2.20	.87	1.38	1.93	1.38	.31
CL-61-HWSD-P	CL-62-HWSD-P	5.91		1.26	1.73	.55			.500	2.56	.91	1.50	2.28	1.57	.39
CL-81-HWSD-P	CL-82-HWSD-P	7.87	1.57	1.54	2.09	.67		1.50	.625	3.54	1.10	1.97	3.19	1.89	.51

Carr Lane®
MANUFACTURING CO.
4200 Carr Lane Ct., P.O. Box 191970
St. Louis, Missouri 63119-7970 USA
Phone: 314-647-6200, FAX: 314-647-5736
Web Site: www.carrlane.com

(Rev. 3-07)

HAND WHEELS

BODY: BLACK PHENOLIC PLASTIC
HUB (ANGLED SPOKE): MILD STEEL, BLACK OXIDE FINISH
HUB (SOLID): MILD STEEL, ZINC PLATED CLEAR CHROMATE

High-quality, modern-design phenolic Hand Wheel with three spokes. Molded-in steel hub, blank without a pilot hole. Available with either a Revolving Handle or a plain rim without a handle. Black phenolic plastic (glossy smooth finish, extremely hard, electrical insulator, operating temperatures to 300°F, resistant to oils and most common chemicals).

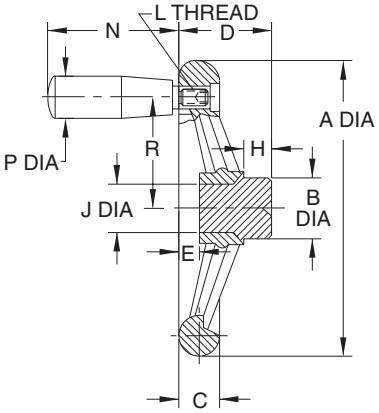

ELESA ORIGINAL DESIGN

ANGLED-SPOKE ROUNDED DESIGN — PHENOLIC

PART NO. WITH REVOLVING HANDLE	PART NO. WITHOUT HANDLE (NOT TAPPED)	A DIA	B DIA	C	D	E	H	J DIA	L	N	P DIA
CL-41-HWAR-F	CL-4-HWAR-F	3.86	.94	.55	1.57	.16	.47	.79	M6	1.57	.71
CL-51-HWAR-F	CL-5-HWAR-F	4.88		.71	1.38	.35			M8	1.97	.83
CL-61-HWAR-F	CL-6-HWAR-F	6.18	1.26	.87	1.57	.47	.59	.94	M8	2.56	.91
CL-81-HWAR-F	CL-8-HWAR-F	7.80	1.57	.94	2.20	.51		1.22	M10	3.15	1.02

High-quality, modern-design phenolic Hand Wheel. Molded-in steel hub, blank with a pilot hole. Available with either a Revolving Handle or a plain rim without a handle. Black phenolic plastic (glossy smooth finish, extremely hard, electrical insulator, operating temperatures to 300°F, resistant to oils and most common chemicals).

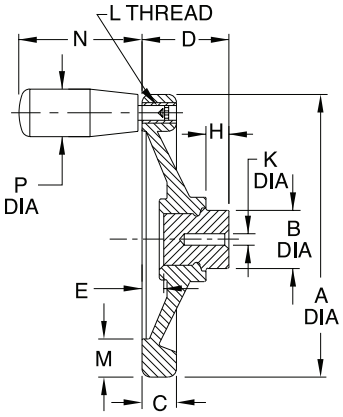

SOLID SQUARE DESIGN — PHENOLIC

PART NO. WITH REVOLVING HANDLE	PART NO. WITHOUT HANDLE (NOT TAPPED)	A DIA	B DIA	C	D	E	H	K DIA	L	M	N	P DIA
CL-31-HWSS-F	CL-3-HWSS-F	3.15	.79	.55	1.22	.16	.39	.157	M6	.59	1.57	.71
CL-41-HWSS-F	CL-4-HWSS-F	3.94	.94		1.38	.24	.43		M8	.63	1.97	.83
CL-51-HWSS-F	CL-5-HWSS-F	4.92	1.26	.63	1.73	.35	.51	.236	M8	.71	2.17	.91
CL-61-HWSS-F	CL-6-HWSS-F	5.91	1.26	.71	1.89	.43	.51		M10	.79	2.56	1.02
CL-81-HWSS-F	CL-8-HWSS-F	7.87	1.57	.83	2.28	.55	.63			.94		

Carr Lane®
MANUFACTURING CO.
4200 Carr Lane Ct., P.O. Box 191970
St. Louis, Missouri 63119-7970 USA
Phone: 314-647-6200, FAX: 314-647-5736
Web Site: www.carrlane.com

(Rev. 3-07)

FLUTED HAND WHEELS

BODY: BLACK PHENOLIC PLASTIC
HUB: MILD STEEL, ZINC PLATED CLEAR CHROMATE

CL-4-FHW

CL-3-FHW

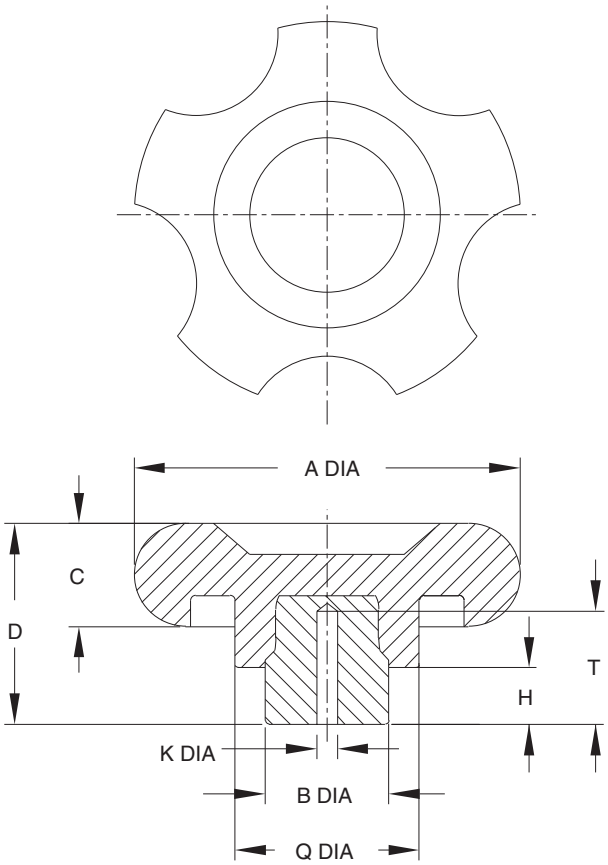

Small five-lobed phenolic hand wheels that are useful as control knobs or clamping knobs. Available in two diameters. Molded-in steel hub, blank with a pilot hole. Black phenolic plastic (glossy smooth finish, extremely hard, electrical insulator, operating temperatures to 300°F, resistant to oils and most common chemicals). Note: catalog photos are actual size.

PART NO.	A DIA	B DIA	C	D	H	K DIA	Q DIA	T
CL-3-FHW	2.95	.94	.79	1.54	.43	.157	1.34	.87
CL-4-FHW	3.54	1.26		1.65	.47	.236	1.73	.98

Carr Lane®
MANUFACTURING CO.
4200 Carr Lane Ct., P.O. Box 191970
St. Louis, Missouri 63119-7970 USA
Phone: 314-647-6200, FAX: 314-647-5736
Web Site: www.carrlane.com

(Rev. 7-06)

SOLID HANDLES

STEEL: 12L14, BLACK OXIDE FINISH. STAINLESS STEEL: 300 SERIES.

NOW ALSO AVAILABLE IN METRIC!

Square Design Threaded Stainless Steel

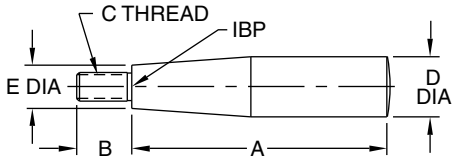

NOW ALSO AVAILABLE IN METRIC!

Rounded Design Threaded Stainless Steel

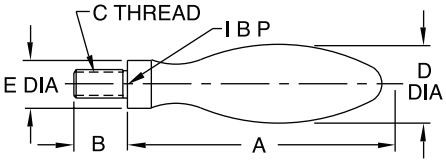

Rounded Design Press Fit Steel, Black Oxide Finish

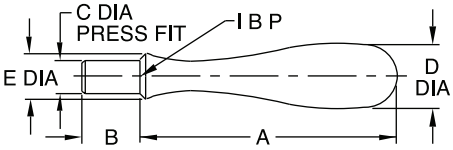

SQUARE DESIGN, THREADED — STAINLESS (USA)

PART NO.	SIZE	A	B	C	D DIA	E DIA
CL-100-SH-S	1	1-1/2	9/32	1/4-20	1/2	13/32
CL-200-SH-S	2	2	7/16			
CL-300-SH-S	3	2-1/2	9/16	5/16-18	5/8	15/32
CL-400-SH-S	4	3-1/4	11/16	3/8-16	3/4	19/32

ROUNDED DESIGN, THREADED — STAINLESS (USA)

CL-250-SH-S	2	2	1/2	1/4-20	5/8	.44
CL-350-SH-S	3	2-5/8	9/16	5/16-18	13/16	.53
CL-450-SH-S	4	3-3/16	11/16	3/8-16	1	.63
CL-550-SH-S	5	3-3/4	13/16	1/2-13	1-1/4	.75

ROUNDED DESIGN, PRESS FIT — STEEL (USA)

CL-1-SH	2	2	9/16	3/8	11/16	5/8
CL-2-SH	4	3-1/4	3/4	7/16	1	11/16
CL-3-SH	5	3-7/8	1	1/2	1-3/16	7/8

Attractive fixed handles available in steel with a black oxide finish, or stainless steel with a polished finish. Available in square or rounded designs, each in several sizes. Choice of threaded type or press-fit type (do not use press-fit handles on aluminum hand wheels).

SQUARE DESIGN, THREADED — STAINLESS (METRIC)

PART NO.	SIZE	A	B	C	D DIA	E DIA
CLM-100-SH-S	1	1-1/2	9/32	M6	1/2	13/32
CLM-200-SH-S	2	2	7/16			
CLM-300-SH-S	3	2-1/2	9/16	M8	5/8	15/32
CLM-400-SH-S	4	3-1/4	11/16	M10	3/4	19/32

ROUNDED DESIGN, THREADED — STAINLESS (METRIC)

CLM-250-SH-S	2	2	1/2	M6	5/8	.44
CLM-350-SH-S	3	2-5/8	9/16	M8	13/16	.53
CLM-450-SH-S	4	3-3/16	11/16	M10	1	.63
CLM-550-SH-S	5	3-3/4	13/16	M12	1-1/4	.75

FINGER PINS

12L14 STEEL, BLACK OXIDE FINISH

Miniature, fixed finger handle in steel, with a black oxide finish.

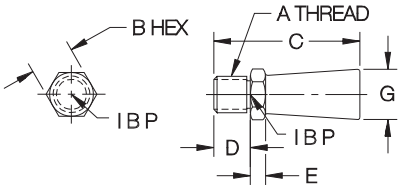

USA

PART NO.	A	B	C	D	E	G DIA
CL-0-FP	#10-32	1/4	3/4	1/4	7/64	1/4
CL-1-FP	#10-24					
CL-2-FP	5/16-18	3/8	1-1/4	5/16	5/32	3/8

METRIC

CLM-5-FP	M5	6mm	.75	.24	.12	.24
CLM-8-FP	M8	10mm	1.26	.31	.16	.39

Carr Lane®
MANUFACTURING CO.
4200 Carr Lane Ct., P.O. Box 191970
St. Louis, Missouri 63119-7970 USA
Phone: 314-647-6200, FAX: 314-647-5736
Web Site: www.carrlane.com

(Rev. 7-06)

REVOLVING HANDLES

STEEL: 12L14, BLACK OXIDE FINISH. STAINLESS STEEL: 300 SERIES

NOW ALSO AVAILABLE IN METRIC!

Square Design
Threaded
Stainless Steel

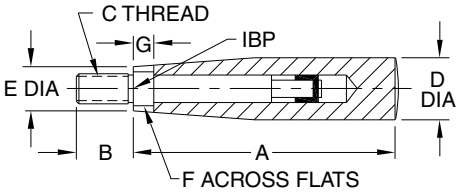

NOW ALSO AVAILABLE IN METRIC!

Rounded Design
Threaded
Stainless Steel

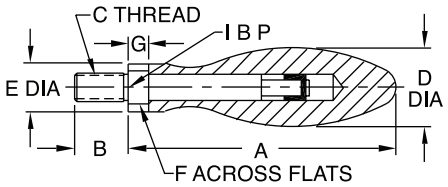

Rounded Design
Shoulder Screw
Steel, Black Oxide Finish

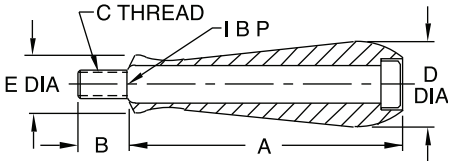

Rounded Design
Press Fit
Steel, Black Oxide Finish

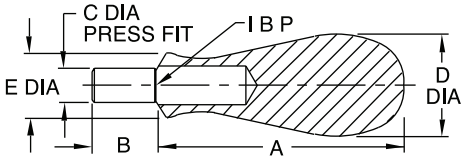

Revolving Handles have an internal bearing that allows the handle to remain fixed in your hand, for firm gripping, while turning a hand wheel or crank. These attractive handles are available in steel with a black oxide finish, or stainless steel with a polished finish. Available in square or rounded designs, each in several sizes. Choice of threaded type or press-fit type (do not use press-fit handles on aluminum hand wheels).

SQUARE DESIGN, THREADED — STAINLESS (USA)

PART NO.	SIZE	A	B	C	D DIA	E DIA	F	G
CL-100-RH-S	1	1-1/2	9/32	1/4-20	5/8	15/32	5/16	.20
CL-200-RH-S	2	2	1/2			7/16		.25
CL-300-RH-S	3	2-1/2	9/16	5/16-18	3/4	17/32	3/8	.28
CL-400-RH-S	4	3-1/4	5/8	3/8-16	7/8	5/8	7/16	.32

ROUNDED DESIGN, THREADED — STAINLESS (USA)

CL-250-RH-S	2	2-1/4	1/2	1/4-20	5/8	.44	5/16	.25
CL-350-RH-S	3	2-13/16	9/16	5/16-18	13/16	.53	3/8	.28
CL-450-RH-S	4	3-3/8	5/8	3/8-16	1	.63	7/16	.32
CL-550-RH-S	5	4	3/4	1/2-13	1-1/4	.75	5/8	.39

ROUNDED DESIGN, SHOULDER SCREW — STEEL (USA)

CL-1-RH	2	2	7/16	1/4-20	13/16	3/4	—	—
CL-2-RH	4	3-1/4	9/16	3/8-16	1-1/4	15/16	—	—
CL-3-RH	5	3-7/8	3/4	1/2-13	1-1/2	1-1/8	—	—

ROUNDED DESIGN, PRESS FIT — STEEL (USA)

CL-4-RH	2	2-3/8	19/32	5/16	1	5/8	—	—

SQUARE DESIGN, THREADED — STAINLESS (METRIC)

PART NO.	SIZE	A	B	C	D DIA	E DIA	F	G
CLM-100-RH-S	1	1-1/2	9/32	M6	5/8	15/32	5/16	.20
CLM-200-RH-S	2	2	1/2			7/16		.25
CLM-300-RH-S	3	2-1/2	9/16	M8	3/4	17/32	3/8	.28
CLM-400-RH-S	4	3-1/4	5/8	M10	7/8	5/8	7/16	.32

ROUNDED DESIGN, THREADED — STAINLESS (METRIC)

CLM-250-RH-S	2	2-1/4	1/2	M6	5/8	.44	5/16	.25
CLM-350-RH-S	3	2-13/16	9/16	M8	13/16	.53	3/8	.28
CLM-450-RH-S	4	3-3/8	11/16	M10	1	.63	7/16	.32
CLM-550-RH-S	5	4	13/16	M12	1-1/4	.75	5/8	.39

ROUNDED DESIGN, SHOULDER SCREW — STEEL (METRIC)

CLM-1-RH	2	2	7/16	M6	13/16	3/4	—	—
CLM-2-RH	4	3-1/4	9/16	M10	1-1/4	15/16	—	—
CLM-3-RH	5	3-7/8	3/4	M12	1-1/2	1-1/8	—	—

Carr Lane®
MANUFACTURING CO.
4200 Carr Lane Ct., P.O. Box 191970
St. Louis, Missouri 63119-7970 USA
Phone: 314-647-6200, FAX: 314-647-5736
Web Site: www.carrlane.com

(Rev. 3-07)

REVOLVING HANDLES

BODY: BLACK PHENOLIC PLASTIC OR NYLON THERMOPLASTIC
THREADED SPINDLE: MILD STEEL, ZINC PLATED CLEAR CHROMATE

Phenolic with Steel Body

Thermoplastic with Steel Body

Modern square-design handle with a threaded steel spindle. Revolving Handles have an internal bearing that allows the handle to remain fixed in your hand, for firm gripping while turning a Hand Wheel or crank. Threaded spindle has a hex socket for easy installation. Available in two handle materials: Black phenolic plastic (glossy smooth finish, extremely hard, electrical insulator, operating temperatures to 300°F, resistant to oils and most common chemicals) or matte black nylon thermoplastic (textured surface for secure gripping, excellent impact resistance, operating temperatures to 230°F).

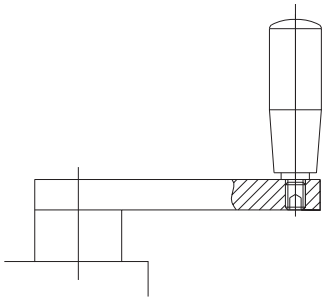

Revolving Handles can be used to make custom crank handles.

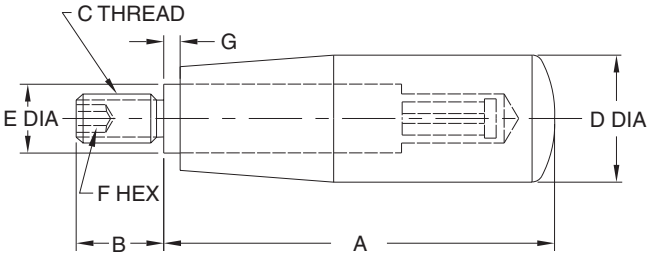

USA

PART NO. PHENOLIC	PART NO. THERMOPLASTIC	SIZE	A	B	C	D DIA	E DIA	F	G
CL-100-RH-F	CL-100-RH-P	1	1.67	.47	1/4-20	.71	.39	3mm	.10
CL-200-RH-F	CL-200-RH-P	2	2.07	.51		.83			
CL-300-RH-F	CL-300-RH-P	3	2.66	.55	5/16-18	.91	.51	4mm	
CL-400-RH-F	CL-400-RH-P	4	3.25	.63	3/8-16	1.02		5mm	
CL-500-RH-F	—	5	4.12	.79	1/2-13	1.22	.55	6mm	

METRIC

CLM-100-RH-F	CLM-100-RH-P	1	1.67	.47	M6	.71	.39	3mm	.10
CLM-200-RH-F	CLM-200-RH-P	2	2.07	.51	M6	.83		3mm	
CLM-201-RH-F	—				M8			4mm	
CLM-300-RH-F	CLM-300-RH-P	3	2.66	.55	M8	.91	.51	4mm	
CLM-400-RH-F	CLM-400-RH-P	4	3.25	.63	M10	1.02		5mm	
CLM-500-RH-F	—	5	4.12	.79	M12	1.22	.55	6mm	

Carr Lane®
MANUFACTURING CO.
4200 Carr Lane Ct., P.O. Box 191970
St. Louis, Missouri 63119-7970 USA
Phone: 314-647-6200, FAX: 314-647-5736
Web Site: www.carrlane.com

(Rev. 3-07)

FOLDABLE REVOLVING HANDLES

BODY: 300-SERIES STAINLESS STEEL. HANDLE: BLACK THERMOPLASTIC

Thermoplastic with Stainless Steel Body

Unique revolving handle that can fold away when not in use. Handle is positively locked in extended position. Like other revolving handles, this foldable handle has an internal bearing that allows it to remain fixed in your hand, for firm gripping, while turning a hand wheel or crank. To allow folding, the handle must first be pulled outward, against a spring force, then moved 90°. Once folded, the handle is held in that position also by spring force.

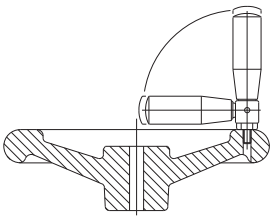

To install handle in tapped hole, screw in as far as possible, then back off until the handle is at the desired orientation. Tight Jam Nut to secure at that orientation.

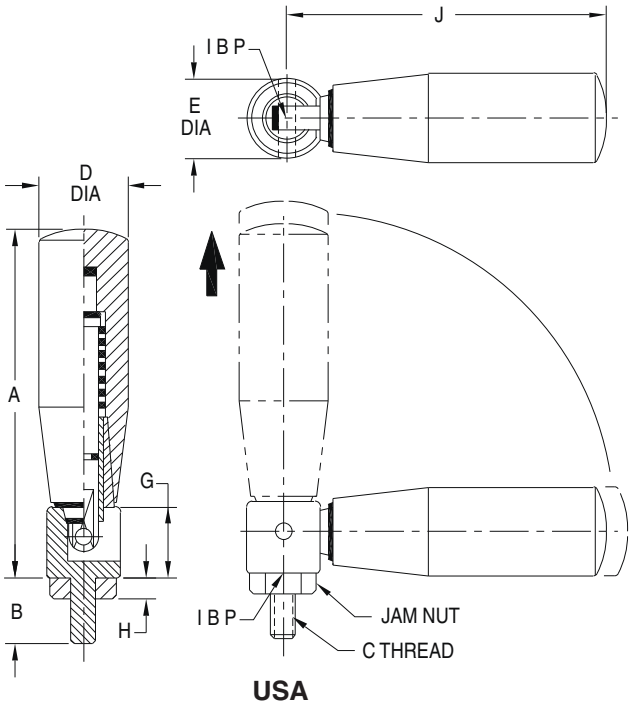

USA

PART NO.	SIZE	A	B	C	D DIA	E DIA	G	H	J
CL-200-FRH-S	2	2-1/2	5/8	1/4-20	7/8	.63	1/2	11/64	2-3/8
CL-300-FRH-S	3	3-1/4	3/4	5/16-18	15/16	.78	5/8	13/64	3-1/8
CL-400-FRH-S	4	3-3/4	7/8	3/8-16	1	.78	5/8	15/64	3-5/8

REVOLVING BALL HANDLES

BALL KNOB: BLACK PHENOLIC PLASTIC
THREADED SPINDLE: MILD STEEL, BLACK OXIDE FINISH OR ZINC PLATED CLEAR CHROMATE

Phenolic with Steel Body

Revolving handle with a ball knob made of phenolic plastic and a threaded steel spindle. This version is especially useful for hand wheels or cranks mounted horizontally with the handle used as a hand rest. Revolving Ball Handles have an internal bearing that allows the handle to remain fixed in your hand, for firm gripping. Threaded spindle has a hex socket for easy installation.

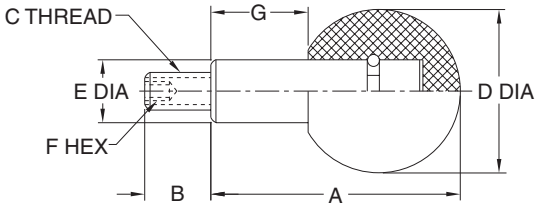

USA

PART NO.	SIZE	A	B	C	D DIA	E DIA	F	G
CL-200-RBH	2	1.48	.43	1/4-20	.98	.39	3mm	.59
CL-300-RBH	3	1.89	.51	5/16-18	1.26	.51	4mm	.75
CL-400-RBH	4	2.40	.55	3/8-16	1.57	.63	5mm	.94
CL-500-RBH	5	3.07	.83	1/2-13	1.97	.79	6mm	1.22

METRIC

CLM-200-RBH	2	1.48	.43	M6	.98	.39	3mm	.59
CLM-300-RBH	3	1.89	.51	M8	1.26	.51	4mm	.75
CLM-400-RBH	4	2.40	.55	M10	1.57	.63	5mm	.94
CLM-500-RBH	5	3.07	.83	M12	1.97	.79	6mm	1.22

Carr Lane®
MANUFACTURING CO.
4200 Carr Lane Ct., P.O. Box 191970
St. Louis, Missouri 63119-7970 USA
Phone: 314-647-6200, FAX: 314-647-5736
Web Site: www.carrlane.com

(Rev. 11-09)

LEVER BARS

300-SERIES STAINLESS STEEL

Versatile Lever Bars available in three diameters, each in several lengths. 300-series stainless steel polished to a beautiful finish. Can be used with the hubs on page 97 to make lever handles. Wrench flat allows firm tightening.

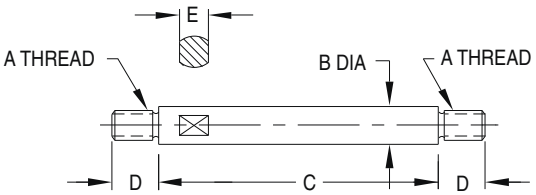

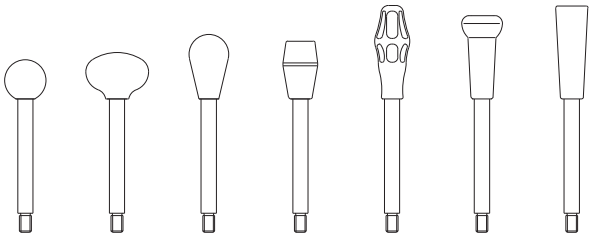

USA

PART NO.	A	B DIA	C	D	E
CL-515-LVB-S	5/16-18	.39	1.5	7/16	5/16
CL-522-LVB-S			2.2		
CL-530-LVB-S			3.0		
CL-540-LVB-S			4.0		
CL-555-LVB-S			5.5		
CL-620-LVB-S	3/8-16	.47	2.0	1/2	3/8
CL-627-LVB-S			2.7		
CL-637-LVB-S			3.7		
CL-647-LVB-S			4.7		
CL-660-LVB-S			6.0		
CL-837-LVB-S	1/2-13	.55	3.7	5/8	7/16
CL-847-LVB-S			4.7		
CL-857-LVB-S			5.7		
CL-867-LVB-S			6.7		

YOU DON'T STOP LAUGHING BECAUSE YOU GROW OLD; YOU GROW OLD BECAUSE YOU STOP LAUGHING.

Carr Lane®
MANUFACTURING CO.
4200 Carr Lane Ct., P.O. Box 191970
St. Louis, Missouri 63119-7970 USA
Phone: 314-647-6200, FAX: 314-647-5736
Web Site: www.carrlane.com

(Rev. 11-09)

LEVER HANDLES

300-SERIES STAINLESS STEEL

Single Lever Handle

Triple Lever Handle

Fast, efficient levers that provide high torque. These attractive Lever Handles are made of 300-series stainless steel, polished to a beautiful finish. Hubs are available in single-handle or triple-handle versions, each in two sizes. Lever Handles can be totally customized by choosing Lever Bar length (see page 96) and Knob type (see pages 106-110).

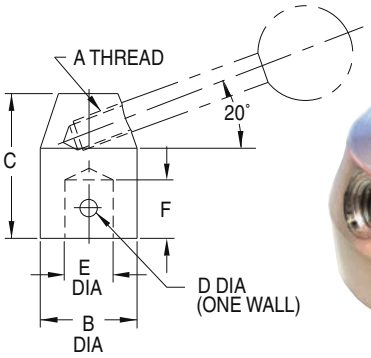

Single Hub

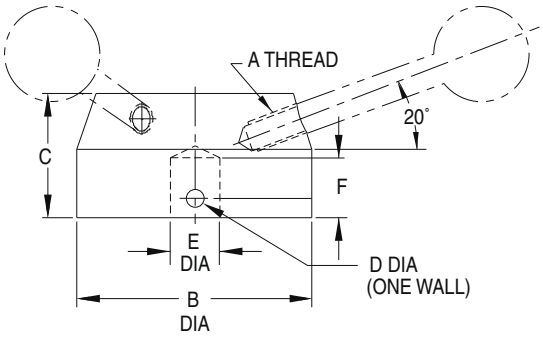

Triple Hub

SINGLE LEVER HANDLE — ORDER HUB, LEVER BAR, AND KNOB SEPARATELY (USA)

PART NO. HUB ONLY	A	B DIA	C	D DIA	E	F	PART NO. LEVER BAR	PART NO. KNOB
CL-116-LHH-S	5/16-18	1	1-1/2	1/8	3/8 DIA REAMED	5/8	SEE PAGE 96	SEE PAGES 106-112
CL-1160-LHH-S				—	3/8-16 TAPPED	9/16		
CL-128-LHH-S	3/8-16	1-1/4	1-7/8	5/32	1/2 DIA REAMED	3/4		
CL-1280-LHH-S				—	1/2-13 TAPPED	11/16		

TRIPLE LEVER HANDLE — ORDER HUB, LEVER BARS, AND KNOBS SEPARATELY (USA)

CL-316-LHH-S	5/16-18	2	1	3/16	3/8 DIA REAMED	3/4	SEE PAGE 96	SEE PAGES 106-112
CL-328-LHH-S	3/8-16	2-3/8	1-3/16	3/16	1/2 DIA REAMED	7/8		

Carr Lane MANUFACTURING CO.
4200 Carr Lane Ct., P.O. Box 191970
St. Louis, Missouri 63119-7970 USA
Phone: 314-647-6200, FAX: 314-647-5736
Web Site: www.carrlane.com

(Rev. 4-07)

CRANK HANDLES

NODULAR IRON PER ASTM A536 CLASS 65-45-12, ZINC PLATED CLEAR CHROMATE

Rugged crank handle with a comfortable grip. Choice of three sizes that fit all common square drives.

PART NO.	SQUARE DRIVE SIZE	A	B	C	D DIA	E	F	G DIA
CL-0-H	3/8 or 10mm	2-1/4	3	1	7/8	13/32	5/8	5/8
CL-1-H	1/2 or 12mm	3-3/4	4-3/16	1-5/16	1-1/16	17/32	7/8	7/8
CL-2-H	5/8 or 16mm	5-1/4	5-1/2	2-1/2	1-3/8	21/32	1-3/4	1

SPEED BALL HANDLES

NODULAR IRON PER ASTM-A536 CLASS 65-45-12, ZINC PLATED CLEAR CHROMATE

Speed handles that are weighted for quick turning. Long arm extensions provide excellent leverage for hand tightening.

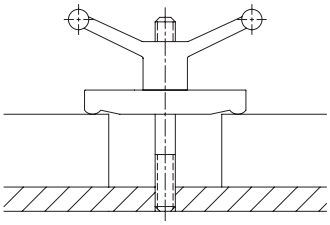

Double Arm

DOUBLE ARM (USA & METRIC)

PART NO.	A	B	C DIA	D	E
CL-4-SBH	4-7/8	1-5/8	1-1/8	2-1/4	BLANK
CL-44-SBH					1/2-13
CLM-44-SBH					M12
CL-6-SBH	6	1-5/8	1-3/8	2-3/8	BLANK
CL-64-SBH					5/8-11
CLM-64-SBH					M16
CL-8-SBH	8	1-13/16	1-3/4	2-7/8	BLANK
CL-84-SBH					3/4-10
CLM-84-SBH					M20

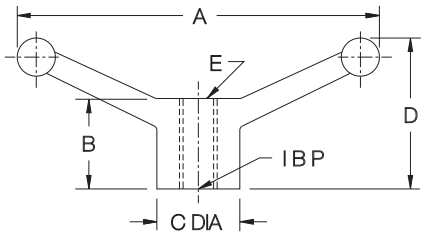

Single Arm

SINGLE ARM (USA & METRIC)

PART NO.	A	B	C DIA	D	E
CL-5-SBH	3	1-5/8	1-3/8	2-3/8	BLANK
CL-55-SBH					1/2-13
CL-59-SBH					5/8-11
CLM-55-SBH					M12
CLM-59-SBH					M16
CL-7-SBH	4-3/8	2	1-5/8	3-1/2	BLANK
CL-75-SBH					3/4-10
CLM-75-SBH					M20

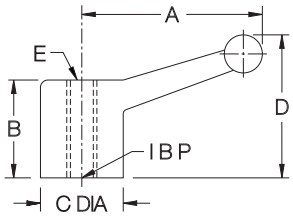

Carr Lane®
MANUFACTURING CO.
4200 Carr Lane Ct., P.O. Box 191970
St. Louis, Missouri 63119-7970 USA
Phone: 314-647-6200, FAX: 314-647-5736
Web Site: www.carrlane.com

(Rev. 4-07)

BALANCED CRANK HANDLES

300-SERIES STAINLESS STEEL

Rounded Handle (Solid or Revolving) Stainless Steel

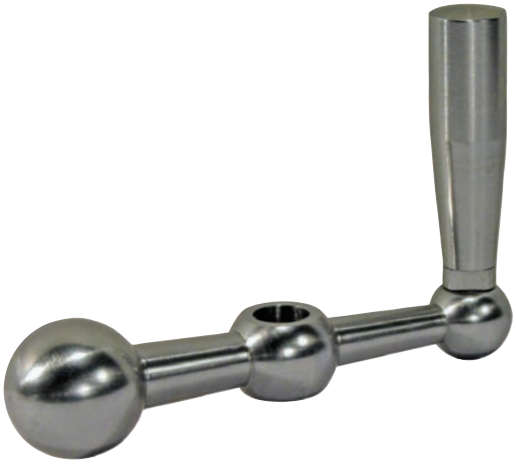

Square Handle (Solid or Revolving) Stainless Steel

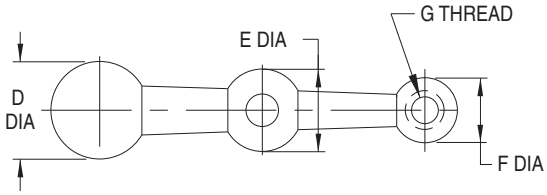

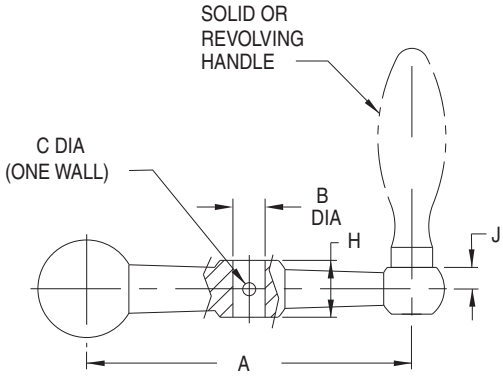

High-quality, stainless steel crank handle with a beautiful polished finish. Handle is balanced for smooth operation, and so that no rotation occurs due to handle weight. The reamed center hole is cross-drilled in one wall for easy installation by pinning. Order body and handle separately, with a choice of four handle types:

- Rounded-design Solid Handle (p.92)
- Rounded-design Revolving Handle (p. 93)
- Square-design Solid Handle (p. 92)
- Square-design Revolving Handle (p. 93)

ORDER BODY AND SOLID/REVOLVING HANDLE SEPARATELY

PART NO. BODY ONLY	A	B DIA	C DIA	D DIA	E DIA	F DIA	G	H	J	PART NO. — SOLID OR REVOLVING HANDLE			
										ROUNDED SOLID	ROUNDED REVOLVING	SQUARE SOLID	SQUARE REVOLVING
CL-20-CHB-S	2-1/2	5/16	1/8	1	3/4	5/8	1/4-20	9/16	1/4	CL-250-SH-S	CL-250-RH-S	CL-200-SH-S	CL-200-RH-S
CL-30-CHB-S	3-1/8	3/8	5/32	1-1/4	1	3/4	5/16-18	11/16	5/16	CL-350-SH-S	CL-350-RH-S	CL-300-SH-S	CL-300-RH-S
CL-40-CHB-S	4												
CL-50-CHB-S	5	1/2	3/16	1-1/2	1-1/4	1	3/8-16	7/8	3/8	CL-450-SH-S	CL-450-RH-S	CL-400-SH-S	CL-400-RH-S
CL-51-CHB-S		5/8*											

*1/8" Square keyway on this size only.

Carr Lane®
MANUFACTURING CO.
4200 Carr Lane Ct., P.O. Box 191970
St. Louis, Missouri 63119-7970 USA
Phone: 314-647-6200, FAX: 314-647-5736
Web Site: www.carrlane.com

(Rev. 3-07)

CRANK HANDLES

CRANK BODY & REVOLVING HANDLE: MATTE BLACK THERMOPLASTIC
HUB: MILD STEEL, BLACK OXIDE FINISH
CENTER TRIM COVER: ALUMINUM, MATTE ANODIZED
REVOLVING HANDLE SPINDLE: MILD STEEL, ZINC PLATED CLEAR CHROMATE

Thermoplastic with Revolving Handle

High-quality, fiber-reinforced technopolymer Crank Handle, available in five sizes. High-strength design suitable for heavy-duty applications. Matte black high-strength thermoplastic (resistant to oils, solvents, and grease, excellent impact resistance, operating temperatures to 230°F). Molded-in steel hub, blank with a pilot hole. Center trim cover is self-adhesive (apply after modifying hub). Furnished with a Revolving Handle or a Foldable Revolving Handle. Foldable handle is positively locked in extended position. To allow folding, the handle must first be pulled outward, against a spring force, then folded 90°. Once folded, the handle is held in that position also by spring force.

Thermoplastic with Foldable Revolving Handle

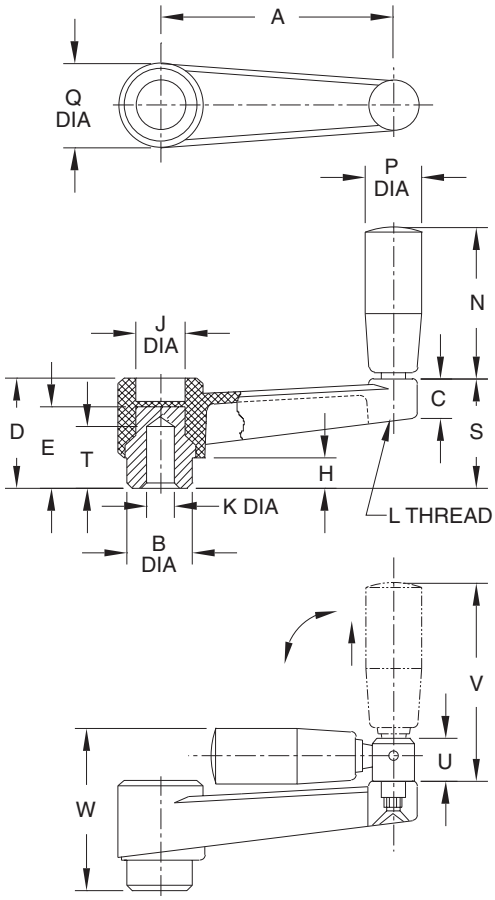

ELESA ORIGINAL DESIGN

PART NO. WITH REVOLVING HANDLE	PART NO. WITH FOLDABLE REVOLVING HANDLE	A	B DIA	C	D	E	H	J DIA	K DIA	L	N	P DIA	Q DIA	S	T	U	V	W
CL-21-CHP	—	2.52	.71	.51	1.30	1.14	.39	.63	.236	M6	1.57	.71	1.06	1.30	.71	—	—	—
CL-31-CHP	CL-32-CHP	3.15	.87		1.42	1.26		.67			1.97	.83	1.18	1.42	1.02	.59	2.95	2.20
CL-41-CHP	CL-42-CHP	3.94	.94	.63	1.57	1.46	.39	.83	.315	M8	2.56	.91	1.34	1.61	1.10	.79	3.43	2.48
CL-51-CHP	CL-52-CHP	5.12	1.10		1.93	1.73	.55	.98	.394	M10	3.15	1.02	1.57	1.97	1.18	.79	3.43	2.80
CL-61-CHP	CL-62-CHP	6.30	1.34	.71	2.17	1.93	.59	1.06	.394	M10	3.54	1.10	1.77	2.20	1.18	.79	4.09	3.11

Carr Lane®
MANUFACTURING CO.
4200 Carr Lane Ct., P.O. Box 191970
St. Louis, Missouri 63119-7970 USA
Phone: 314-647-6200, FAX: 314-647-5736
Web Site: www.carrlane.com

(Rev. 9-09)

ADJUSTABLE HANDLES

HANDLE: FIBER-REINFORCED THERMOPLASTIC WITH STAINLESS STEEL INSERT
BODY, SCREW, AND SPRING: STEEL, BLACK OXIDE FINISH

Steel Body
Plastic Handle (Black)

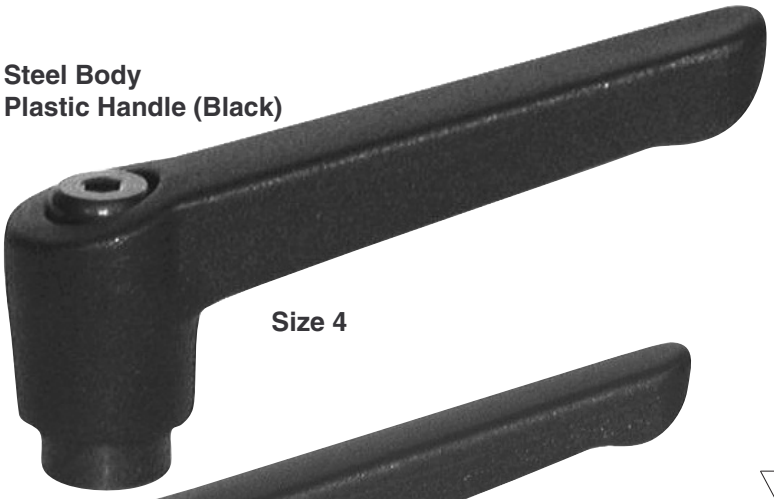

Size 4

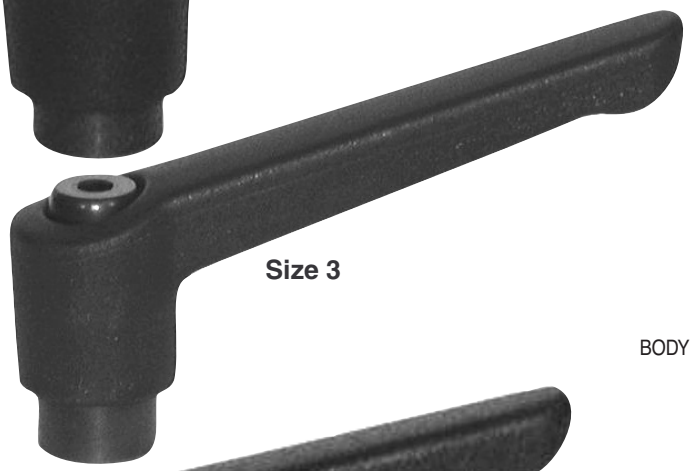

Size 3

Size 2

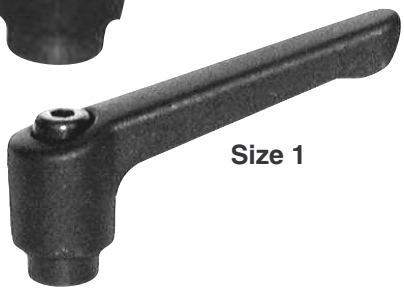

Size 1

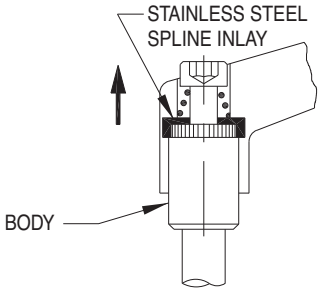

These Adjustable Handles are incredibly strong! They feature a unique stainless steel spline inlay, molded into the plastic handle. This provides positive metal-to-metal mating with the serrated body, for high clamping torque. Lift handle to disengage serrations, rotate to desired position, then release handle to automatically re-engage spline.

TAPPED (USA)

PART NO. STEEL BLACK	SIZE	E	J
CL-3-AHP-1	1	#10-32	.31
CL-4-AHP-1		1/4-20	
CL-4-AHP-2	2	1/4-20	.39
CL-5-AHP-2		5/16-18	
CL-5-AHP-3	3	5/16-18	.55
CL-6-AHP-3		3/8-16	
CL-6-AHP-4	4	3/8-16	.67
CL-8-AHP-4		1/2-13	

TAPPED (METRIC)

CLM-6-AHP-1	1	M6	.31
CLM-8-AHP-2	2	M8	.39
CLM-10-AHP-3	3	M10	.55
CLM-12-AHP-4	4	M12	.67

STUD TYPE (USA)

PART NO. STEEL BLACK	SIZE	E	F
CL-408-AHP-1	1	1/4-20	.78
CL-416-AHP-1			1.57
CL-508-AHP-2	2	5/16-18	.78
CL-516-AHP-2			1.57
CL-525-AHP-2			2.48
CL-610-AHP-3	3	3/8-16	.98
CL-616-AHP-3			1.57
CL-625-AHP-3			2.48
CL-813-AHP-4	4	1/2-13	1.26
CL-816-AHP-4			1.57
CL-825-AHP-4			2.48

STUD TYPE (METRIC)

CLM-620-AHP-1	1	M6	.78
CLM-640-AHP-1			1.57
CLM-820-AHP-2	2	M8	.78
CLM-840-AHP-2			1.57
CLM-1030-AHP-3	3	M10	1.26
CLM-1050-AHP-3			1.97
CLM-1230-AHP-4	4	M12	1.26
CLM-1250-AHP-4			1.97

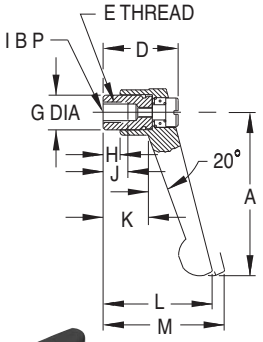

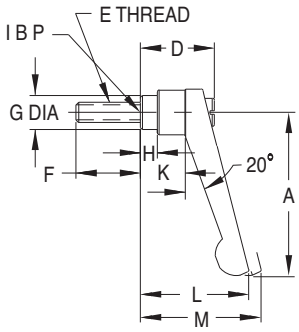

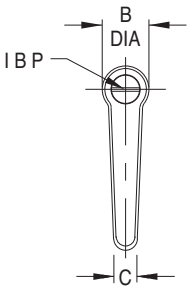

Adjustable handle that can be reset to any angle. Ideal for clamping in a confined space, or when a specific handle position is desired. Available in steel (with a black plastic handle) or stainless steel (with a metallic-gray plastic handle, see page 102). Rugged spring-loaded spline mechanism. Choice of four handle sizes. Available with a tapped hole or with an integral stud. Note: Catalog photos above are actual size.

Stud Type

GENERAL DIMENSIONS

SIZE	A	B DIA	C	D	G DIA	H	K	L	M
1	1-3/4	19/32	5/16	31/32	3/8	5/32	7/16	1-3/8	1-1/2
2	2-1/2	3/4	13/32	1-7/32	17/32	1/4	13/16	1-25/32	1-15/16
3	3-1/16	7/8	17/32	1-7/16	5/8	5/16	7/8	2-5/32	2-5/16
4	3-5/8	1	9/16	1-11/16	3/4	7/16	1-3/16	2-9/16	2-23/32

Carr Lane®
MANUFACTURING CO.
4200 Carr Lane Ct., P.O. Box 191970
St. Louis, Missouri 63119-7970 USA
Phone: 314-647-6200, FAX: 314-647-5736
Web Site: www.carrlane.com

(9-09)

ADJUSTABLE HANDLES

HANDLE: FIBER-REINFORCED THERMOPLASTIC WITH STAINLESS STEEL INSERT
BODY, SCREW, AND SPRING: 300-SERIES STAINLESS STEEL

Stainless Steel Body
Plastic Handle (Metallic Gray)

Size 4

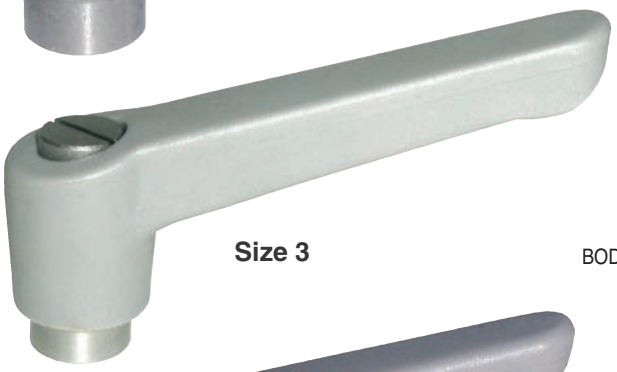

Size 3

Size 2

Size 1

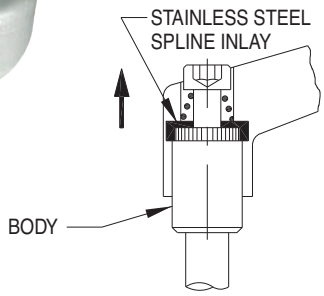

These Adjustable Handles are incredibly strong! They feature a unique stainless steel spline inlay, molded into the plastic handle. This provides positive metal-to-metal mating with the serrated body, for high clamping torque. Lift handle to disengage serrations, rotate to desired position, then release handle to automatically re-engage spline.

TAPPED (USA)

PART NO. STAINLESS METALLIC GRAY	SIZE	E	J
CL-3-AHP-1-S	1	#10-32	.31
CL-4-AHP-1-S		1/4-20	
CL-4-AHP-2-S	2	1/4-20	.39
CL-5-AHP-2-S		5/16-18	
CL-5-AHP-3-S	3	5/16-18	.55
CL-6-AHP-3-S		3/8-16	
CL-6-AHP-4-S	4	3/8-16	.67
CL-8-AHP-4-S		1/2-13	

TAPPED (METRIC)

CLM-6-AHP-1-S	1	M6	.31
CLM-8-AHP-2-S	2	M8	.39
CLM-10-AHP-3-S	3	M10	.55
CLM-12-AHP-4-S	4	M12	.67

STUD TYPE (USA)

PART NO. STAINLESS METALLIC GRAY	SIZE	E	F
CL-408-AHP-1-S	1	1/4-20	.78
CL-416-AHP-1-S			1.57
CL-508-AHP-2-S	2	5/16-18	.78
CL-516-AHP-2-S			1.57
CL-525-AHP-2-S			2.48
CL-610-AHP-3-S	3	3/8-16	.98
CL-616-AHP-3-S			1.57
CL-625-AHP-3-S			2.48
CL-813-AHP-4-S	4	1/2-13	1.26
CL-816-AHP-4-S			1.57
CL-825-AHP-4-S			2.48

STUD TYPE (METRIC)

CLM-620-AHP-1-S	1	M6	.78
CLM-640-AHP-1-S			1.57
CLM-820-AHP-2-S	2	M8	.78
CLM-840-AHP-2-S			1.57
CLM-1030-AHP-3-S	3	M10	1.26
CLM-1050-AHP-3-S			1.97
CLM-1230-AHP-4-S	4	M12	1.26
CLM-1250-AHP-4-S			1.97

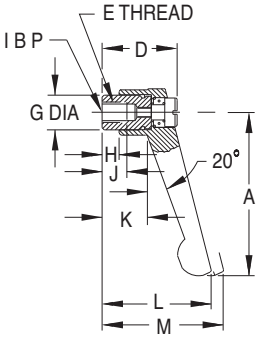

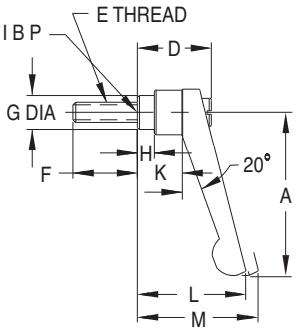

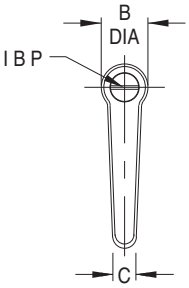

Adjustable handle that can be reset to any angle. Ideal for clamping in a confined space, or when a specific handle position is desired. Available in stainless steel (with a metallic-gray plastic handle), or steel (with a black plastic handle, see page 101). Rugged spring-loaded spline mechanism. Choice of four handle sizes. Available with a tapped hole or with an integral stud. Note: Catalog photos above are actual size.

Stud Type

GENERAL DIMENSIONS

SIZE	A	B DIA	C	D	G DIA	H	K	L	M
1	1-3/4	19/32	5/16	31/32	3/8	5/32	7/16	1-3/8	1-1/2
2	2-1/2	3/4	13/32	1-7/32	17/32	1/4	13/16	1-25/32	1-15/16
3	3-1/16	7/8	17/32	1-7/16	5/8	5/16	7/8	2-5/32	2-5/16
4	3-5/8	1	9/16	1-11/16	3/4	7/16	1-3/16	2-9/16	2-23/32

Carr Lane®
MANUFACTURING CO.
4200 Carr Lane Ct., P.O. Box 191970
St. Louis, Missouri 63119-7970 USA
Phone: 314-647-6200, FAX: 314-647-5736
Web Site: www.carrlane.com

(Rev. 7-03)

ADJUSTABLE HANDLES

HANDLE: ZINC DIE CASTING; ENAMEL PAINT
BODY: 12L14 STEEL, BLACK OXIDE FINISH. SPRING: MUSIC WIRE

Steel Body
Zinc Die Cast Handle (Moss Green)

Size 5

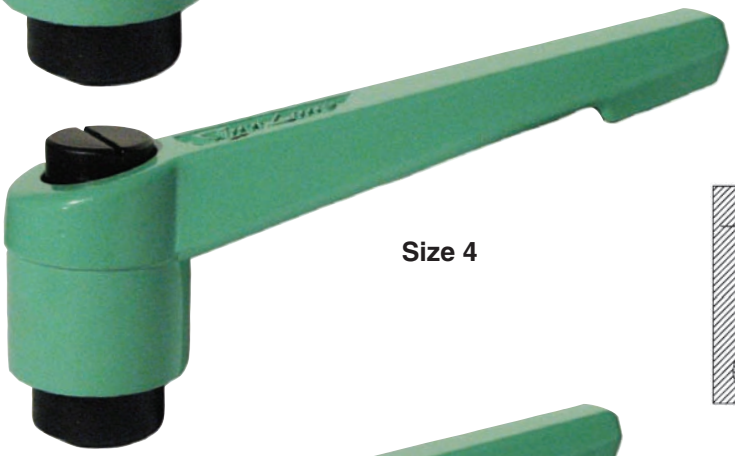

Size 4

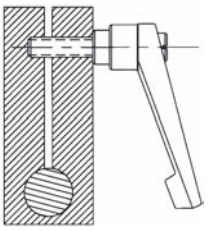

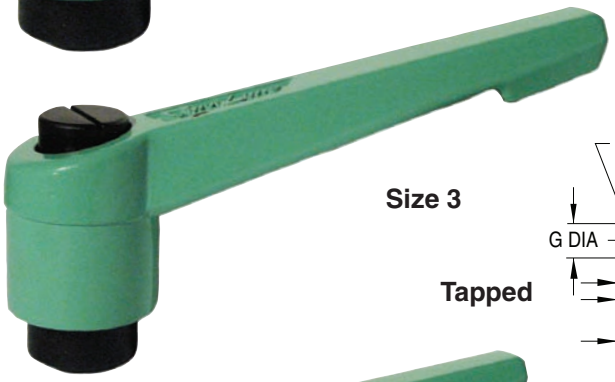

Size 3

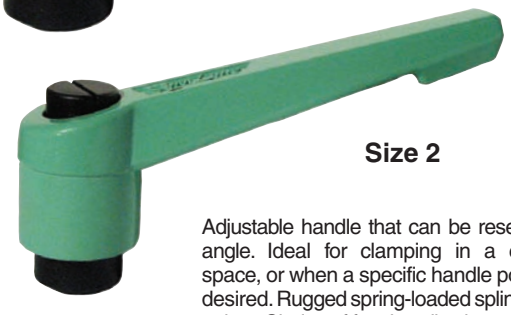

Size 2

Tapped

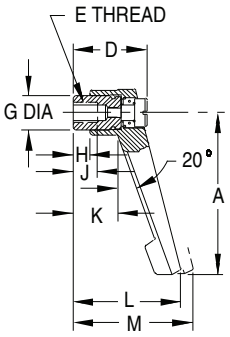

Stud Type

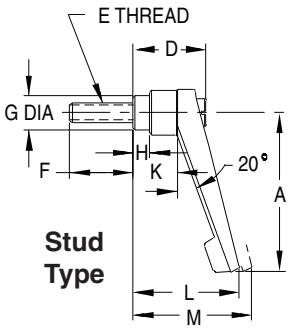

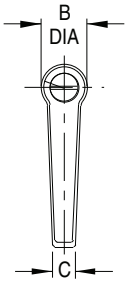

TAPPED (USA)

PART NO.	SIZE	E	J
CL-4-AH-2	2	1/4-20	1/2
CL-5-AH-2		5/16-18	
CL-5-AH-3	3	5/16-18	9/16
CL-6-AH-3		3/8-16	
CL-6-AH-4	4	3/8-16	5/8
CL-8-AH-4		1/2-13	
CL-8-AH-5	5	1/2-13	7/8
CL-10-AH-5		5/8-11	

TAPPED (METRIC)

CLM-8-AH-2	2	M8	1/2
CLM-10-AH-3	3	M10	9/16
CLM-12-AH-4	4	M12	5/8
CLM-16-AH-5	5	M16	7/8

STUD TYPE (USA)

PART NO.	SIZE	E	F
CL-510-AH-2	2	5/16-18	1
CL-515-AH-2			1-1/2
CL-520-AH-2			2
CL-610-AH-3	3	3/8-16	1
CL-615-AH-3			1-1/2
CL-620-AH-3			2
CL-810-AH-4	4	1/2-13	1
CL-815-AH-4			1-1/2
CL-820-AH-4			2
CL-830-AH-4			3
CL-1015-AH-5	5	5/8-11	1-1/2
CL-1020-AH-5			2
CL-1030-AH-5			3

Adjustable handle that can be reset to any angle. Ideal for clamping in a confined space, or when a specific handle position is desired. Rugged spring-loaded spline mechanism. Choice of four handle sizes. Available with a tapped hole or with an integral stud. Note: catalog photos are actual size.

GENERAL DIMENSIONS

SIZE	A	B DIA	C	D	G DIA	H	K	L	M
2	2-9/16	3/4	3/8	1-1/8	17/32	1/4	11/16	1-11/16	1-7/8
3	3-1/8	7/8	7/16	1-1/2	5/8	13/32	15/16	2-3/16	2-5/16
4	3-3/4	1	1/2	1-11/16	3/4	13/32	1-1/16	2-1/2	2-11/16
5	4-5/16	1-1/4	5/8	2	15/16	15/32	1-5/16	2-15/16	3-1/8

Carr Lane®
MANUFACTURING CO.
4200 Carr Lane Ct., P.O. Box 191970
St. Louis, Missouri 63119-7970 USA
Phone: 314-647-6200, FAX: 314-647-5736
Web Site: www.carrlane.com

(Rev. 3-07)

ADJUSTABLE LEVER HANDLES

LEVER ARM, HUB, INSERT, AND SPRING: MILD STEEL, BLACK OXIDE FINISH
BALL KNOB: BLACK PHENOLIC PLASTIC

Steel

Size 3
Size 4
Size 5
Size 6

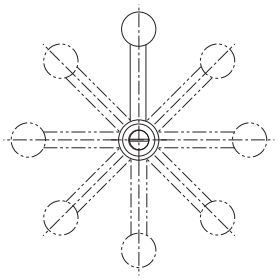

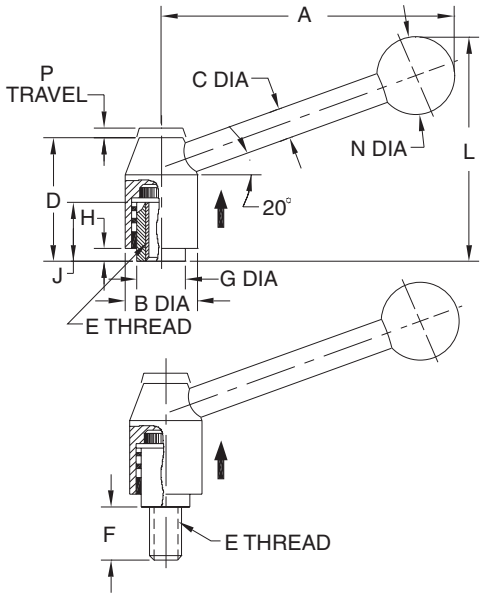

Heavy-duty adjustable handle that can be reset to any angle. Ideal for clamping in a confined space, or when a specific handle position is desired. Rugged spring-loaded spline mechanism. Lift handle to disengage serrations, rotate to desired position, then release handle to automatically re-engage spline. Available with a tapped hole or an integral stud.

STEEL — TAPPED (USA)

PART NO.	SIZE	A	B DIA	C DIA	D	E	F	G	H	J	L	N DIA	P
CL-6-AHL-3	3	3.94	.94	.39	1.57	3/8-16	—	.63	.10	.55	2.95	.98	.18
CL-8-AHL-4	4	4.53	1.10	.47	1.91	1/2-13	—	.75	.18	.67	3.54	1.18	
CL-10-AHL-5	5	5.12	1.30	.47	2.17	5/8-11	—	.91	.24	.91	3.94	1.26	.22
CL-12-AHL-6	6	5.71	1.57	.55	2.68	3/4-10	—	1.10		1.42	4.33	1.38	

STEEL — TAPPED (METRIC)

CLM-10-AHL-3	3	3.94	.94	.39	1.57	M10	—	.63	.10	.55	2.95	.98	.18
CLM-12-AHL-4	4	4.53	1.10	.47	1.91	M12	—	.75	.18	.67	3.54	1.18	
CLM-16-AHL-5	5	5.12	1.30	.47	2.17	M16	—	.91	.24	.91	3.94	1.26	.22
CLM-20-AHL-6	6	5.71	1.57	.55	2.68	M20	—	1.10		1.42	4.33	1.38	

STEEL — STUD TYPE (USA)

CL-613-AHL-3	3	3.94	.94	.39	1.57	3/8-16	1.26	.63	.10	—	2.95	.98	.18
CL-625-AHL-3							2.48						
CL-813-AHL-4	4	4.53	1.10	.47	1.91	1/2-13	1.26	.75	.18	—	3.54	1.18	
CL-825-AHL-4							2.48						
CL-1016-AHL-5	5	5.12	1.30	.47	2.17	5/8-11	1.57	.91	.24	—	3.94	1.26	.22
CL-1025-AHL-5							2.48						

STEEL — STUD TYPE (METRIC)

CLM-1050-AHL-3	3	3.94	.94	.39	1.57	M10	1.97	.63	.10	—	2.95	.98	.18
CLM-1250-AHL-4	4	4.53	1.10	.47	1.91	M12	1.97	.75	.18	—	3.54	1.18	
CLM-1650-AHL-5	5	5.12	1.30	.47	2.17	M16	1.97	.91	.24	—	3.94	1.26	.22

Carr Lane®
MANUFACTURING CO.
4200 Carr Lane Ct., P.O. Box 191970
St. Louis, Missouri 63119-7970 USA
Phone: 314-647-6200, FAX: 314-647-5736
Web Site: www.carrlane.com

(Rev. 3-07)

ADJUSTABLE LEVER HANDLES

LEVER ARM, HUB, INSERT, AND SPRING: STAINLESS STEEL
BALL KNOB: PHENOLIC PLASTIC

Stainless Steel

Size 3
Size 4

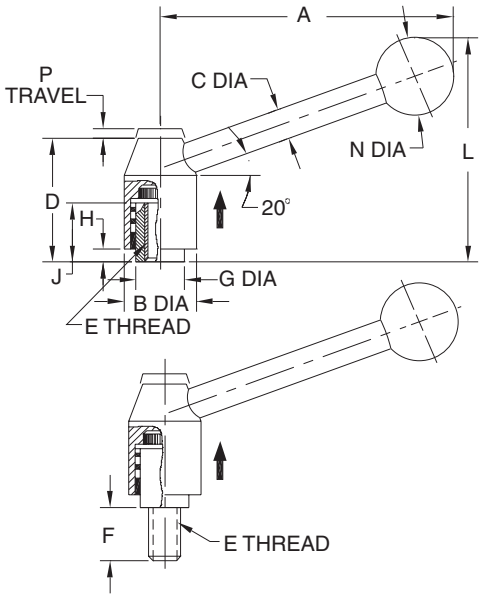

Heavy-duty stainless steel adjustable handle that can be reset to any angle. Ideal for clamping in a confined space, or when a specific handle position is desired. Rugged spring-loaded spline mechanism. Lift handle to disengage serrations, rotate to desired position, then release handle to automatically re-engage spline. Available with a tapped hole or an integral stud.

STAINLESS STEEL — TAPPED (USA)

PART NO.	SIZE	A	B DIA	C DIA	D	E	F	G	H	J	L	N DIA	P
CL-6-AHL-3-S	3	3.94	.94	.39	1.57	3/8-16	—	.63	.10	.55	2.95	.98	.18
CL-8-AHL-4-S	4	4.53	1.10	.47	1.91	1/2-13	—	.75	.18	.67	3.54	1.18	

STAINLESS STEEL — TAPPED (METRIC)

CLM-10-AHL-3-S	3	3.94	.94	.39	1.57	M10	—	.63	.10	.55	2.95	.98	.18
CLM-12-AHL-4-S	4	4.53	1.10	.47	1.91	M12	—	.75	.18	.67	3.54	1.18	

STAINLESS STEEL — STUD TYPE (USA)

CL-613-AHL-3-S	3	3.94	.94	.39	1.57	3/8-16	1.26	.63	.10	—	2.95	.98	.18
CL-625-AHL-3-S							2.48						
CL-813-AHL-4-S	4	4.53	1.10	.47	1.91	1/2-13	1.26	.75	.18	—	3.54	1.18	
CL-825-AHL-4-S							2.48						

STAINLESS STEEL — STUD TYPE (METRIC)

CLM-1050-AHL-3-S	3	3.94	.94	.39	1.57	M10	1.97	.63	.10	—	2.95	.98	.18
CLM-1250-AHL-4-S	4	4.53	1.10	.47	1.91	M12	1.97	.75	.18	—	3.54	1.18	

Carr Lane®
MANUFACTURING CO.
4200 Carr Lane Ct., P.O. Box 191970
St. Louis, Missouri 63119-7970 USA
Phone: 314-647-6200, FAX: 314-647-5736
Web Site: www.carrlane.com

(Rev. 4-07)

BALL KNOBS

BLACK PHENOLIC, THERMOPLASTIC, OR CUSHION GRIP PLASTIC WITH BRASS INSERT

Phenolic — Tapped

3/8-16 CL-852-PB
3/8-24 CL-854-PB
1/2-13 CL-872-PB
5/8-18 CL-882-PB
M10 CLM-852-PB
M12 CLM-872-PB
M16 CLM-882-PB

3/8-16 CL-752-PB
1/2-13 CL-772-PB
M10 CLM-752-PB
M12 CLM-772-PB

1/4-20 CL-632-PB
5/16-18 CL-642-PB
3/8-16 CL-652-PB
3/8-24 CL-654-PB
1/2-13 CL-672-PB
1/2-20 CL-674-PB
M10 CLM-652-PB
M12 CLM-672-PB

1/4-20 CL-532-PB
5/16-18 CL-542-PB
3/8-16 CL-552-PB
3/8-24 CL-554-PB
M8 CLM-542-PB
M10 CLM-552-PB

#10-32 CL-424-PB
1/4-20 CL-432-PB
1/4-28 CL-234-PB
5/16-18 CL-442-PB
5/16-24 CL-444-PB
3/8-16 CL-452-PB
M6 CLM-432-PB
M8 CLM-442-PB

#8-32 CL-212-PB
#10-32 CL-224-PB
1/4-20 CL-232-PB
M5 CLM-222-PB
M6 CLM-232-PB

Phenolic — Tapped Recessed Top

3/8-16 CL-856-PB
3/8-24 CL-858-PB
1/2-13 CL-876-PB

ADDITIONAL METRIC SIZES NOW AVAILABLE!

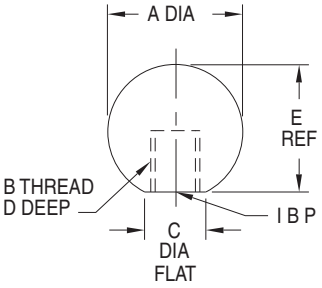

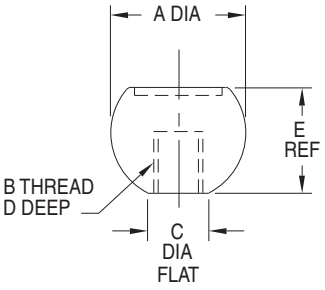

Durable multi-purpose knob, suitable for many applications. Molded-in brass insert provides superior thread strength. Choice of seven ball sizes. The largest size is available with a recessed top (1-1/4" dia) for adding custom decals or inlays. Non-standard thread sizes, molded-in studs, or special colors are available in quantities of 250 and above. Note: Catalog photos are actual size.

Choose From Three Materials

1. Phenolic plastic — glossy smooth finish, extremely hard, electrical insulator, operating temperatures to 300°F, resistant to oils and most common chemicals.
2. Thermoplastic — textured surface for improved gripping, excellent impact resistance, operating temperatures to 150°F.
3. Cushion Grip — unique plastic that feels soft to the touch, matte finish, comfortable yet rugged, excellent impact resistance, operating temperatures to 150°F, excellent gripability even when wet or oily, absorbs vibration.

PHENOLIC — TAPPED (USA & METRIC)

PART NO.	A DIA	B	C DIA	D	E
CL-212-PB	3/4	#8-32	3/8	5/16	45/64
CL-224-PB		#10-32			
CL-232-PB		1/4-20		3/8	
CLM-222-PB		M5		5/16	
CLM-232-PB		M6		3/8	
CL-424-PB	1	#10-32	1/2	5/16	31/32
CL-432-PB		1/4-20		7/16	
CL-234-PB		1/4-28			
CL-442-PB		5/16-18			
CL-444-PB		5/16-24			
CL-452-PB		3/8-16			
CLM-432-PB		M6			
CLM-442-PB		M8			
CL-532-PB	1-3/16	1/4-20	9/16	1/2	1-1/8
CL-542-PB		5/16-18			
CL-552-PB		3/8-16			
CL-554-PB		3/8-24			
CLM-542-PB		M8			
CLM-552-PB		M10			
CL-632-PB	1-3/8	1/4-20	5/8	7/16	1-19/64
CL-642-PB		5/16-18			
CL-652-PB		3/8-16		1/2	
CL-654-PB		3/8-24			
CL-672-PB		1/2-13		5/8	
CL-674-PB		1/2-20			
CLM-652-PB		M10		1/2	
CLM-672-PB		M12		5/8	
CL-752-PB	1-5/8	3/8-16	11/16	1/2	1-37/64
CL-772-PB		1/2-13		5/8	
CLM-752-PB		M10		1/2	
CLM-772-PB		M12		5/8	
CL-852-PB	1-7/8	3/8-16	3/4	1/2	1-51/64
CL-854-PB		3/8-24			
CL-872-PB		1/2-13		5/8	
CL-882-PB*		5/8-18		7/8	
CLM-852-PB		M10		1/2	
CLM-872-PB		M12		5/8	
CLM-882-PB		M16		3/4	

PHENOLIC — TAPPED RECESSED TOP (USA)

CL-856-PB	1-7/8	3/8-16	3/4	1/2	1-15/32
CL-858-PB		3/8-24			
CL-876-PB		1/2-13		5/8	

* This size is solid plastic, without a brass insert.

Carr Lane®
MANUFACTURING CO.
4200 Carr Lane Ct., P.O. Box 191970
St. Louis, Missouri 63119-7970 USA
Phone: 314-647-6200, FAX: 314-647-5736
Web Site: www.carrlane.com

(Rev. 4-07)

BALL KNOBS

BLACK PHENOLIC, THERMOPLASTIC, OR CUSHION-GRIP PLASTIC WITH BRASS INSERT

Thermoplastic — Tapped

1/4-20	CL-6320-PB
5/16-18	CL-6420-PB
3/8-16	CL-6520-PB
1/2-13	CL-6720-PB

Cushion Grip — Tapped

1/4-20	CL-6325-PB
5/16-18	CL-6425-PB
3/8-16	CL-6525-PB
1/2-13	CL-6725-PB

Ball Knobs are now available in three materials: phenolic plastic (see page 106), thermoplastic, and cushion-grip plastic.

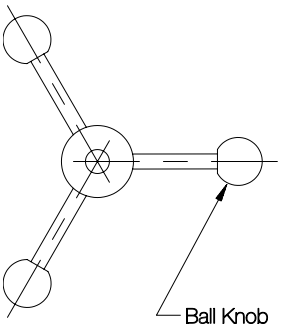

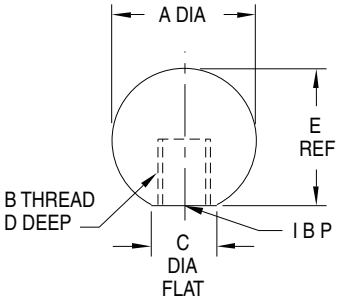

THERMOPLASTIC — TAPPED (USA)

PART NO.	A DIA	B	C DIA	D	E
CL-6320-PB	1-1/2	1/4-20	5/8	5/8	1-15/64
CL-6420-PB		5/16-18			
CL-6520-PB		3/8-16			
CL-6720-PB		1/2-13			

CUSHION GRIP — TAPPED (USA)

CL-6325-PB	1-1/2	1/4-20	5/8	5/8	1-15/64
CL-6425-PB		5/16-18			
CL-6525-PB		3/8-16			
CL-6725-PB		1/2-13			

OVAL BALL KNOBS

BLACK PHENOLIC PLASTIC WITH BRASS INSERT

Phenolic — Tapped

3/8-16	CL-852-OBK
3/8-24	CL-854-OBK
1/2-13	CL-872-OBK

1/4-20	CL-532-OBK
5/16-18	CL-542-OBK
3/8-16	CL-552-OBK

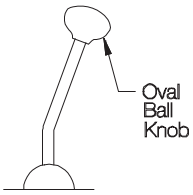

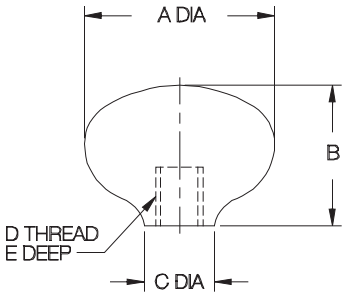

Comfortable-grip ball knobs that are ideal for shift levers, control levers and push/pull rods. Molded-in brass insert provides superior thread strength. Choice of two shapes. Non-standard thread sizes, molded-in studs, or special colors are available in quantities of 250 and above. Note: Catalog photos are actual size.

PHENOLIC — TAPPED (USA)

PART NO.	A DIA	B	C DIA	D	E
CL-532-OBK	1-1/8	1-7/16	1/2	1/4-20	7/16
CL-542-OBK				5/16-18	
CL-552-OBK				3/8-16	1/2
CL-852-OBK	2-1/32	1-1/2	3/4	3/8-16	1/2
CL-854-OBK				3/8-24	
CL-872-OBK				1/2-13	5/8

Carr Lane®
MANUFACTURING CO.
4200 Carr Lane Ct., P.O. Box 191970
St. Louis, Missouri 63119-7970 USA
Phone: 314-647-6200, FAX: 314-647-5736
Web Site: www.carrlane.com

(Rev. 7-06)

BALL KNOBS

1018 STEEL, BLACK OXIDE FINISH, OR 316 STAINLESS STEEL

1/4-20	CL-632-SBK
5/16-18	CL-642-SBK
3/8-16	CL-652-SBK
1/2-13	CL-672-SBK
M6	CLM-632-SBK
M8	CLM-642-SBK
M10	CLM-652-SBK
M12	CLM-672-SBK

NOW ALSO AVAILABLE IN METRIC!

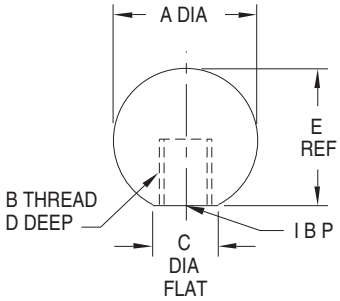

Steel — Tapped

Heavy-duty knob handle made of steel with a black oxide finish. This durable, multi-purpose knob is suitable for many applications. Ideal when added weight is desirable for easier lever actuation. Note: Catalog photo is actual size.

STEEL — TAPPED (USA)

PART NO.	A DIA	B	C DIA	D	E
CL-632-SBK	1-1/2	1/4-20	5/8	9/16	1-7/16
CL-642-SBK		5/16-18		5/8	
CL-652-SBK		3/8-16			
CL-672-SBK		1/2-13			

STEEL — TAPPED (METRIC)

PART NO.	A DIA	B	C DIA	D	E
CLM-632-SBK	1-1/2	M6	5/8	9/16	1-7/16
CLM-642-SBK		M8		5/8	
CLM-652-SBK		M10			
CLM-672-SBK		M12			

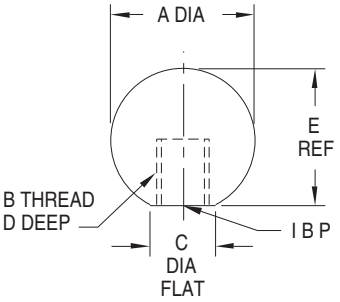

1/4-20	CL-632-SBK-S
5/16-18	CL-642-SBK-S
3/8-16	CL-652-SBK-S
1/2-13	CL-672-SBK-S
M6	CLM-632-SBK-S
M8	CLM-642-SBK-S
M10	CLM-652-SBK-S
M12	CLM-672-SBK-S

Stainless Steel — Tapped

Heavy-duty knob handle made of type 316 stainless steel for excellent corrosion resistance. This durable, multi-purpose knob is suitable for many applications, including marine and chemical environments. Ideal when added weight is desirable for easier lever actuation. Attractive polished finish. Note: Catalog photo is actual size.

STAINLESS STEEL — TAPPED (USA)

PART NO.	A DIA	B	C DIA	D	E
CL-632-SBK-S	1-1/2	1/4-20	5/8	9/16	1-7/16
CL-642-SBK-S		5/16-18		5/8	
CL-652-SBK-S		3/8-16			
CL-672-SBK-S		1/2-13			

STAINLESS STEEL — TAPPED (METRIC)

PART NO.	A DIA	B	C DIA	D	E
CLM-632-SBK-S	1-1/2	M6	5/8	9/16	1-7/16
CLM-642-SBK-S		M8		5/8	
CLM-652-SBK-S		M10			
CLM-672-SBK-S		M12			

CarrLane®
MANUFACTURING CO.
4200 Carr Lane Ct., P.O. Box 191970
St. Louis, Missouri 63119-7970 USA
Phone: 314-647-6200, FAX: 314-647-5736
Web Site: www.carrlane.com

(Rev. 5-08)

OVAL TAPERED KNOBS

BLACK PHENOLIC OR CUSHION-GRIP PLASTIC WITH BRASS INSERT

Phenolic — Tapped

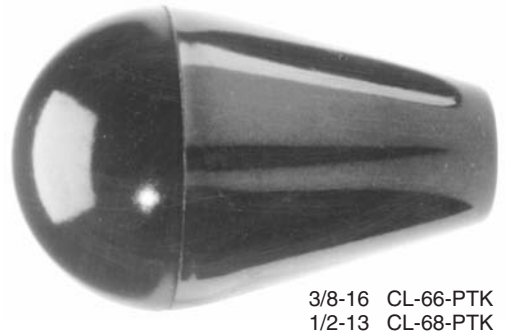

NOW ALSO AVAILABLE IN METRIC!

Attractive design suitable for control levers and push/pull rods. Molded-in brass insert provides superior thread strength. The solid-plastic through-hole version can be used with a Shoulder Screw as a revolving crank handle. Choice of four knob sizes. Non-standard thread sizes, molded-in studs, or special colors are available in quantities of 250 and above. Note: Catalog photos are actual size.

3/8-16 CL-66-PTK
1/2-13 CL-68-PTK
M10 CLM-610-PTK
M12 CLM-612-PTK

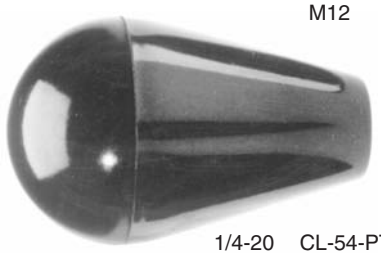

1/4-20 CL-54-PTK
5/16-18 CL-55-PTK
M8 CLM-58-PTK

1/4-20 CL-44-PTK
5/16-18 CL-45-PTK
3/8-16 CL-46-PTK
M6 CLM-46-PTK

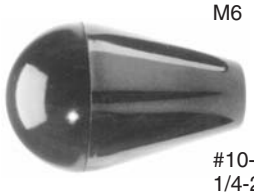

#10-32 CL-23-PTK
1/4-20 CL-24-PTK
M6 CLM-26-PTK

Phenolic — Through Hole

3/8 Dia CL-560-PTK

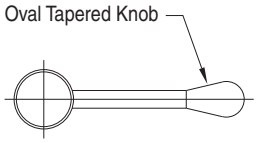

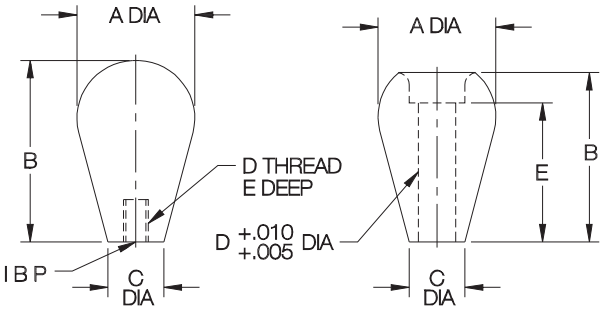

Cushion Grip — Tapped

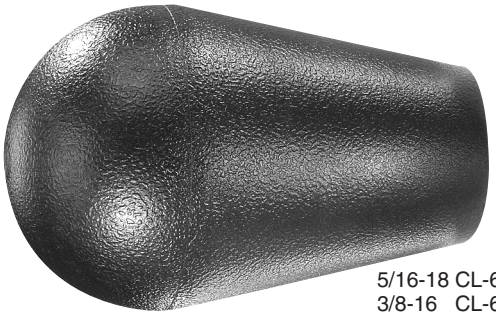

5/16-18 CL-650-PTK
3/8-16 CL-660-PTK

PHENOLIC — TAPPED (USA & METRIC)

PART NO.	A DIA	B	C DIA	D	E
CL-23-PTK	3/4	1-1/4	3/8	#10-32	5/16
CL-24-PTK*				1/4-20	7/16
CLM-26-PTK*				M6	
CL-44-PTK	1	1-5/8	1/2	1/4-20	7/16
CL-45-PTK				5/16-18	
CL-46-PTK				3/8-16	
CLM-46-PTK				M6	
CL-54-PTK	1-3/16	1-7/8	9/16	1/4-20	7/16
CL-55-PTK				5/16-18	
CLM-58-PTK				M8	
CL-66-PTK	1-5/8	2-1/2	7/8	3/8-16	1/2
CL-68-PTK				1/2-13	5/8
CLM-610-PTK				M10	1/2
CLM-612-PTK				M12	5/8

PHENOLIC — THROUGH HOLE

CL-560-PTK*	1-3/16	1-3/4	9/16	.375	1-7/16

CUSHION GRIP — TAPPED (USA)

CL-650-PTK	1-5/8	2-1/2	7/8	5/16-18	5/8
CL-660-PTK				3/8-16	

* These sizes are solid plastic, without a brass insert.

Carr Lane MANUFACTURING CO.
4200 Carr Lane Ct., P.O. Box 191970
St. Louis, Missouri 63119-7970 USA
Phone: 314-647-6200, FAX: 314-647-5736
Web Site: www.carrlane.com

(Rev. 6-06)

TAPERED KNOBS

BLACK CUSHION-GRIP PLASTIC WITH BRASS INSERT

Cushion Grip — Tapped

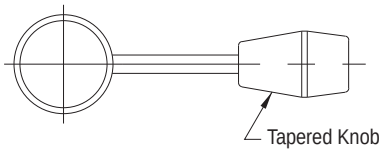

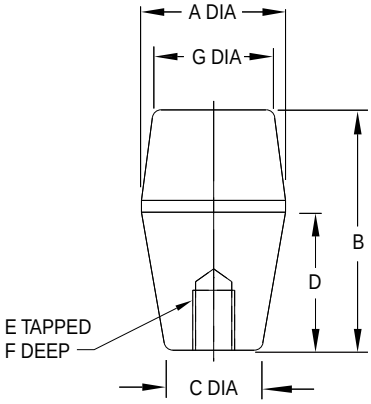

5/16-18 CL-655-TAPK
3/8-16 CL-665-TAPK
1/2-13 CL-685-TAPK

Attractive square design, ideal for lever handles. Made from Cushion Grip plastic, a unique material that feels soft to the touch, comfortable yet rugged. Textured non-slip, non-glare finish. Molded-in brass insert provides superior thread strength. Non-standard thread sizes, molded-in studs, or special colors are available in quantities of 250 and above. Note: Catalog photo is actual size.

CUSHION GRIP — TAPPED (USA)

PART NO.	A DIA	B	C DIA	D	E	F	G DIA
CL-655-TAPK	1-1/2	2-1/2	15/16	1-1/2	5/16-18	3/4	1-1/8
CL-665-TAPK					3/8-16	5/8	
CL-685-TAPK					1/2-13		

PALM-GRIP HANDLES

BLACK THERMOPLASTIC WITH BRASS INSERT

Thermoplastic — Tapped

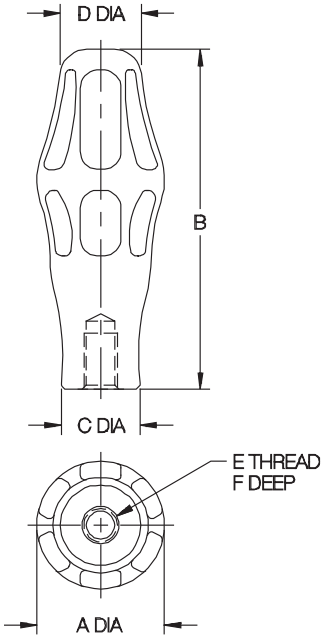

1/4-20 CL-632-PGH
5/16-18 CL-642-PGH
3/8-16 CL-652-PGH

This unique, ergonomically designed handle provides an extremely comfortable grip. Greatly reduces stress on hands, wrists, and arms to help eliminate the risk of repetitive-motion disorders. Textured non-slip, non-glare finish. Molded-in brass insert provides superior thread strength. Non-standard thread sizes, molded-in studs, or special colors are available in quantities of 250 and above. Note: Catalog photo is actual size.

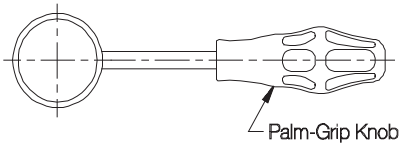

THERMOPLASTIC — TAPPED (USA)

PART NO.	A DIA	B	C DIA	D DIA	E	F
CL-632-PGH	1-3/8	3-3/4	7/8	7/8	1/4-20	7/8
CL-642-PGH					5/16-18	5/8
CL-652-PGH					3/8-16	

Carr Lane®
MANUFACTURING CO.
4200 Carr Lane Ct., P.O. Box 191970
St. Louis, Missouri 63119-7970 USA
Phone: 314-647-6200, FAX: 314-647-5736
Web Site: www.carrlane.com

KNOB HANDLES

BLACK CUSHION-GRIP PLASTIC. TAPPED VERSION WITH BRASS INSERT

Cushion Grip — Tapped or Cored

5/16-18 CL-855-KH
3/8-16 CL-865-KH
3/8 DIA CL-866-KH

5/16-18 CL-655-KH
3/8-16 CL-665-KH
3/8 DIA CL-666-KH

5/16-18 CL-455-KH
3/8-16 CL-465-KH
3/8 DIA CL-466-KH

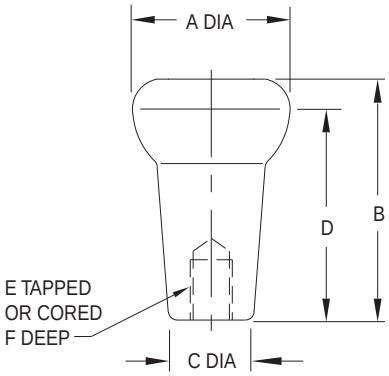

Tapered handle with a knob end for secure gripping. Made from Cushion-Grip plastic, a unique material that feels soft to the touch, comfortable yet rugged. Non-slip, non-glare finish. Molded-in brass insert on the tapped version provides superior thread strength. Optionally available with a plain cored hole to press fit on a shaft. The cored hole is somewhat undersize to grip tightly on a nominal-size shaft without requiring pinning. Non-standard thread sizes, molded-in studs, or special colors are available in quantities of 250 and above. Note: Catalog photos are actual size.

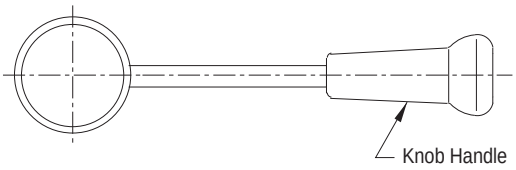

Combination knob and tapered handle. The knob end helps prevent operator's hand from sliding off the handle.

CUSHION GRIP — TAPPED (USA)

PART NO.	A DIA	B	C DIA	D	E	F
CL-455-KH	1-3/8	2-1/8	13/16	11-1/4	5/16-18	5/8
CL-465-KH					3/8-16	
CL-655-KH	1-5/8	2-1/2	7/8	1-1/2	5/16-18	
CL-665-KH					3/8-16	
CL-855-KH	1-1/2	4-3/8		3-1/2	5/16-18	7/16
CL-865-KG					3/8-16	1/2

CUSHION GRIP — CORED

PART NO.	A DIA	B	C DIA	D	E FOR SHAFT DIA	E ACTUAL DIA	F
CL-466-KH	1-3/8	2-1/8	13/16	1-1/4	3/8	.312-.327	1
CL-666-KH	1-5/8	2-1/2	7/8	1-1/2			
CL-866-KH	1-1/2	4-3/8	7/8	3-1/2			

CarrLane®
MANUFACTURING CO.
4200 Carr Lane Ct., P.O. Box 191970
St. Louis, Missouri 63119-7970 USA
Phone: 314-647-6200, FAX: 314-647-5736
Web Site: www.carrlane.com

(Rev. 4-07)

TAPERED HANDLES

BLACK PHENOLIC PLASTIC WITH BRASS INSERT

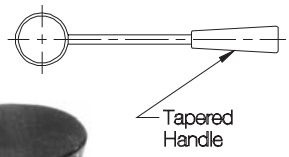

1/2-13 CL-3-PH
M10 CLM-10-PH

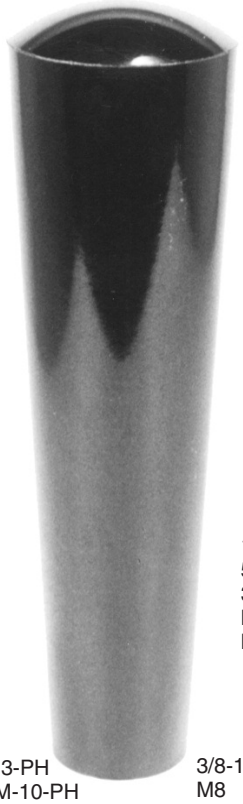

3/8-16 CL-2-PH
M8 CLM-8-PH

1/4-20 CL-1-PH
5/16-18 CL-15-PH
3/8-16 CL-16-PH
M6 CLM-6-PH
M8 CLM-18-PH

1/4-20 CL-0-PH
5/16-18 CL-05-PH
M6 CLM-06-PH
M8 CLM-08-PH

Phenolic — Tapped

#10-32 CL-00-PH
M5 CLM-005-PH

Heavy-duty design that makes an excellent grasp handle or machine shift lever. Molded-in brass insert provides superior thread strength. The solid-plastic through-hole version can be used with a Shoulder Screw as a revolving crank handle. Choice of five handle sizes. Non-standard thread sizes, molded-in studs, or special colors are available in quantities of 250 and above. Note: Catalog photos are actual size.

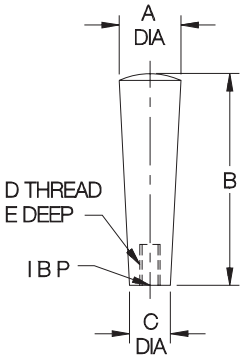

PHENOLIC — TAPPED (USA & METRIC)

PART NO.	A DIA	B	C DIA	D	E
CL-00-PH	3/4	7/8	3/8	#10-32	5/16
CLM-005-PH				M5	
CL-0-PH	1	1-1/4	1/2	1/4-20	7/16
CL-05-PH				5/16-18	
CLM-06-PH				M6	
CLM-08-PH				M8	
CL-1-PH	1	2-5/8	5/8	1/4-20	7/16
CL-15-PH				5/16-18	
CL-16-PH				3/8-16	1/2
CLM-6-PH				M6	7/16
CLM-18-PH				M8	
CL-2-PH	1-1/8	3-7/8	3/4	3/8-16	5/8
CLM-8-PH				M8	7/16
CL-3-PH	1-3/8	4-1/2	1	1/2-13	2
CLM-10-PH				M10	

3/8 Dia CL-30-PH

3/8 Dia CL-20-PH

1/4 Dia CL-10-PH

ADDITIONAL METRIC SIZES NOW AVAILABLE!

Phenolic — Through Hole

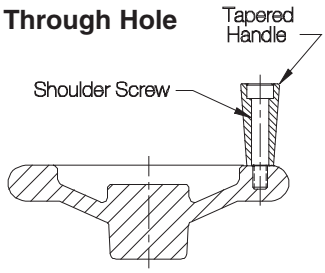

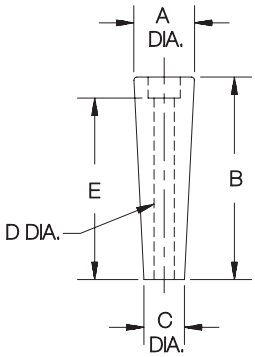

PHENOLIC — THROUGH HOLE

PART NO.	A DIA	B	C DIA	D NOMINAL	D ACTUAL	E
CL-10-PH*	1	2-9/16	5/8	1/4	.251/.256	5/8
CL-20-PH*	1-1/8	3-11/16	3/4	3/8	.380/.385	2-5/8
CL-30-PH*	1-3/8	4-3/32	1	3/8	.380/.390	2-5/8

* This size is solid plastic, without a brass insert.

CarrLane®
MANUFACTURING CO.
4200 Carr Lane Ct., P.O. Box 191970
St. Louis, Missouri 63119-7970 USA
Phone: 314-647-6200, FAX: 314-647-5736
Web Site: www.carrlane.com

(Rev. 4-07)

PULL KNOBS

BLACK PHENOLIC PLASTIC WITH BRASS INSERT

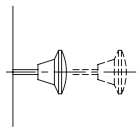

NOW ALSO AVAILABLE IN METRIC!

Versatile knob with an enlarged head for pulling, pushing, or lifting. Molded-in brass insert provides superior thread strength. Choice of three types, in two sizes each. Non-standard thread sizes, molded-in studs, or special colors are available in quantities of 250 and above. Note: Catalog photos are actual size.

Phenolic—Tapped Flat Top

1/4-20 CL-632-PK
5/16-18 CL-642-PK
3/8-16 CL-652-PK
M8 CLM-642-PK

#10-32 CL-424-PK
1/4-20 CL-432-PK
M5 CLM-422-PK
M6 CLM-432-PK

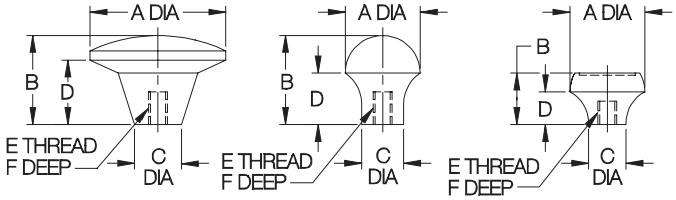

Phenolic—Tapped Oval Top

3/8-24 CL-654-PKO

#10-32 CL-424-PKO
1/4-20 CL-432-PKO
M5 CLM-422-PKO
M6 CLM-432-PKO

PHENOLIC — TAPPED, FLAT TOP (USA & METRIC)

PART NO.	A DIA	B	C DIA	D	E	F
CL-424-PK	1-3/8	7/8	5/8	5/8	#10-32	5/16
CL-432-PK					1/4-20	7/16
CLM-422-PK					M5	5/16
CLM-432-PK					M6	7/16
CL-632-PK	1-13/16	1-3/16	5/8	7/8	1/4-20	7/16
CL-642-PK					5/16-18	
CL-652-PK					3/8-16	1/2
CLM-642-PK					M8	

Phenolic—Tapped Recessed Top

#10-32 CL-424-PKR
1/4-20 CL-432-PKR

#6-32 CL-202-PKR
#8-32 CL-212-PKR
#10-32 CL-224-PKR
1/4-20 CL-232-PKR

PHENOLIC — TAPPED, OVAL TOP (USA & METRIC)

CL-424-PKO	1	1-3/16	9/16	11/16	#10-32	5/16
CL-432-PKO					1/4-20	7/16
CLM-422-PKO					M5	5/16
CLM-432-PKO					M6	7/16
CL-654-PKO	1-5/8	1	5/8	3/8	3/8-24	1/2

PHENOLIC — TAPPED, RECESSED TOP (USA)

CL-202-PKR	3/4	3/4	1/2	21/32	#6-32	5/16
CL-212-PKR					#8-32	
CL-224-PKR					#10-32	
CL-232-PKR					1/4-20	
CL-424-PKR	1	11/16	1/2	7/16	#10-32	5/16
CL-432-PKR					1/4-20	

NOW ALSO AVAILABLE IN METRIC!

T HANDLES

BLACK PHENOLIC PLASTIC WITH BRASS INSERT

Easy-gripping handle for push/pull applications, such as release latches and cabinet doors. Molded-in brass insert provides superior thread strength. Non-standard thread sizes, molded-in studs, or special colors are available in quantities of 250 and above. Note: Catalog photo is actual size.

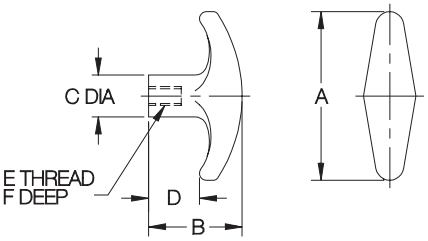

Phenolic—Tapped

#10-32 CL-424-TH
1/4-20 CL-432-TH
1/4-28 CL-434-TH
5/16-18 CL-442-TH
M5 CLM-422-TH
M6 CLM-432-TH
M8 CLM-442-TH

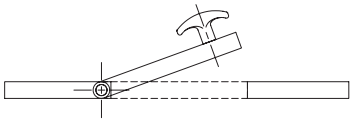

PHENOLIC — TAPPED (USA & METRIC)

PART NO.	A	B	C DIA	D	E	F
CL-424-TH	2-1/4	1-1/4	9/16	11/16	#10-32	5/16
CL-432-TH					1/4-20	7/16
CL-434-TH					1/4-28	
CL-442-TH					5/16-18	
CLM-422-TH					M5	5/16
CLM-432-TH					M6	7/16
CLM-442-TH					M8	

Carr Lane®
MANUFACTURING CO.
4200 Carr Lane Ct., P.O. Box 191970
St. Louis, Missouri 63119-7970 USA
Phone: 314-647-6200, FAX: 314-647-5736
Web Site: www.carrlane.com

(Rev. 3-07)

PULL HANDLES

BLACK THERMOPLASTIC WITH BRASS INSERT

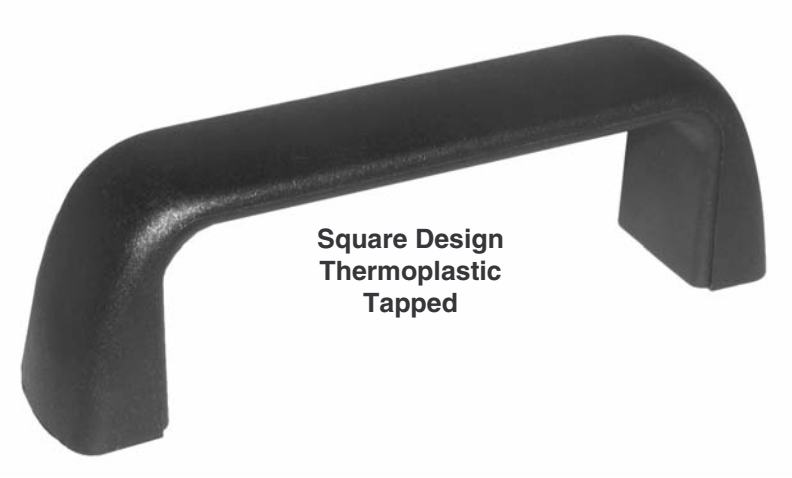

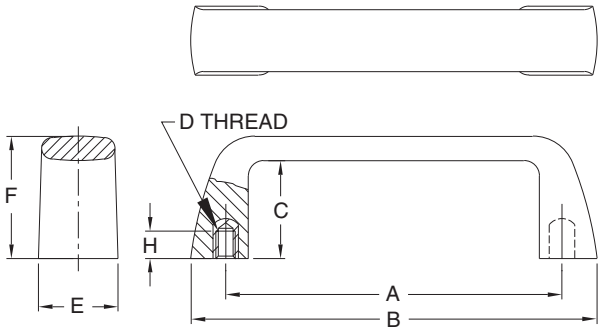

Attractive, modern-design handle that provides a comfortable grip with good ergonomic features. Excellent durability. Textured non-slip, non-glare finish. Molded-in brass insert provides superior thread strength. Black fiber-reinforced nylon thermoplastic (textured surface for secure gripping, excellent impact resistance, operating temperatures to 230°F). Choice of two handle sizes, available with either USA or metric threads.

TAPPED (USA)

PART NO.	A	B	C	D	E	F	H
CL-105-PHS-4	4.13	4.76	1.14	1/4-20	1.02	1.46	.35
CL-117-PHS-5	4.61	5.24	1.26	5/16-18		1.57	

TAPPED (METRIC)

CLM-105-PHS-6	4.13	4.76	1.14	M6	1.02	1.46	.35
CLM-117-PHS-8	4.61	5.24	1.26	M8		1.57	

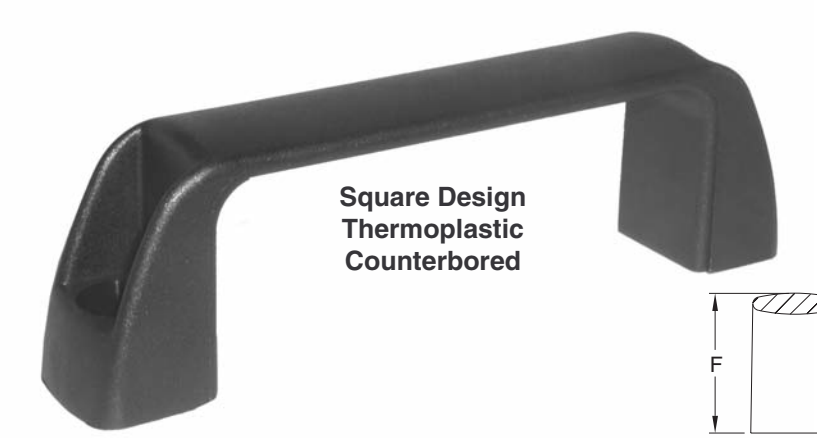

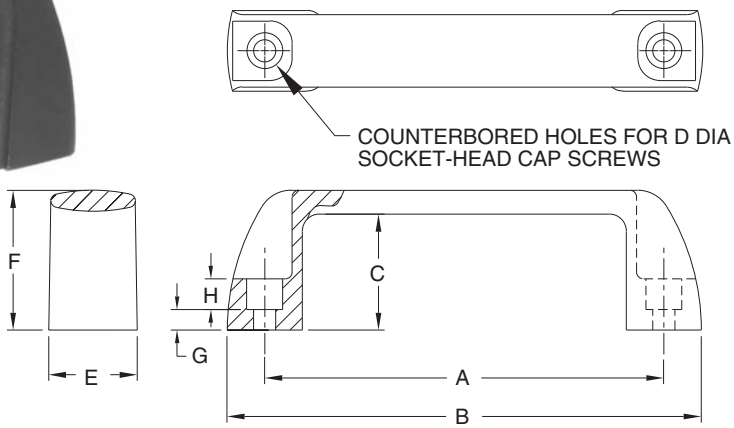

Attractive, modern-design handle that provides a comfortable grip with good ergonomic features. Excellent durability. Textured non-slip, non-glare finish. Counterbored for socket-head cap screws. Choice of four handle sizes. Black fiber-reinforced nylon thermoplastic (textured surface for secure gripping, excellent impact resistance, operating temperatures to 230°F).

COUNTERBORED

PART NO.	A	B	C	D DIA	E	F	G	H
CL-94-PHSC-4	3.68	4.41	1.18	1/4 or M6	.83	1.42	.24	.28
CL-117-PHSC-5	4.61	5.47	1.34	5/16 or M8	1.02	1.61	.24	.35
CL-132-PHSC-5	5.20	6.14	1.46		1.06	1.77	.28	
CL-179-PHSC-5	7.05	8.03	1.65		1.10	1.97	.31	

Carr Lane®
MANUFACTURING CO.
4200 Carr Lane Ct., P.O. Box 191970
St. Louis, Missouri 63119-7970 USA
Phone: 314-647-6200, FAX: 314-647-5736
Web Site: www.carrlane.com

(Rev. 3-07)

PULL HANDLES

ALUMINUM, BLACK POWDER-COATED FINISH, OR 304 STAINLESS STEEL

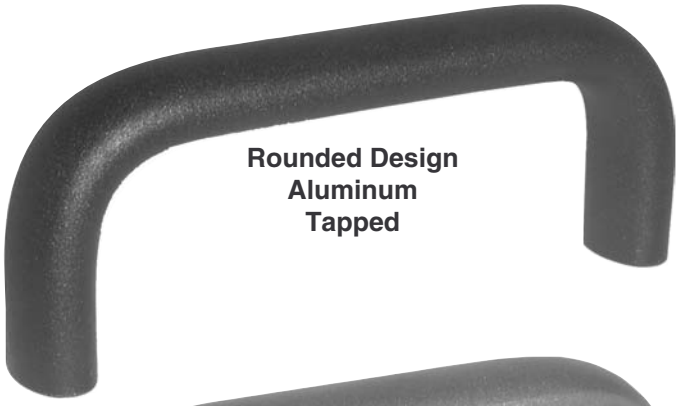

Rounded Design Aluminum Tapped

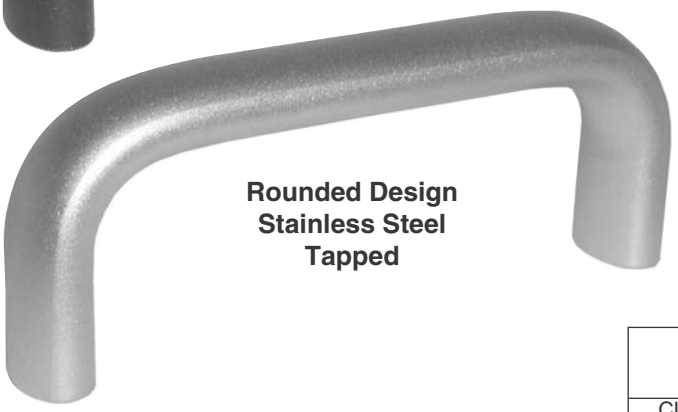

Rounded Design Stainless Steel Tapped

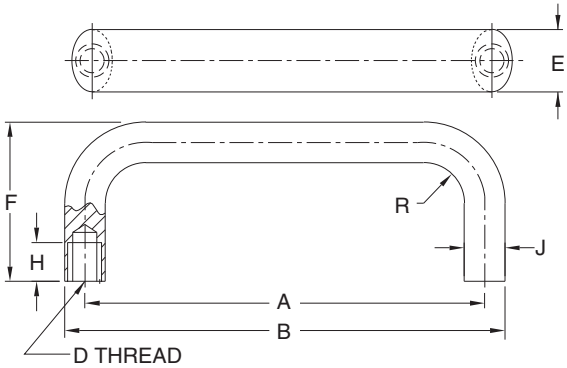

Attractive, modern-design aluminum handle provides a comfortable grip with good ergonomic features. Durable black powder-coated pebble finish. Tapped holes for mounting. Choice of four handle sizes, available with either USA or metric threads. Also available in stainless steel, shot blasted with a satin finish (two sizes).

ALUMINUM — TAPPED (USA)

PART NO.	A	B	D	E	F	H	J	R
CL-112-PHR-4	4.41	4.92	1/4-20	.79	1.93	.39	.51	.51
CL-128-PHR-4	5.04	5.55			2.01			
CL-160-PHR-5	6.30	6.97	5/16-18	1.02	2.24	.47	.67	.67
CL-192-PHR-5	7.56	8.23						

ALUMINUM — TAPPED (METRIC)

CLM-112-PHR-6	4.41	4.92	M6	.79	1.93	.39	.51	.51
CLM-128-PHR-6	5.04	5.55			2.01			
CLM-160-PHR-8	6.30	6.97	M8	1.02	2.24	.47	.67	.67
CLM-192-PHR-8	7.56	8.23						

STAINLESS STEEL — TAPPED (METRIC)

CLM-112-PHR-6-S	4.41	4.92	M6	.79	1.93	.39	.51	.51
CLM-128-PHR-6-S	5.04	5.55			2.01			

Rounded Design Aluminum Counterbored

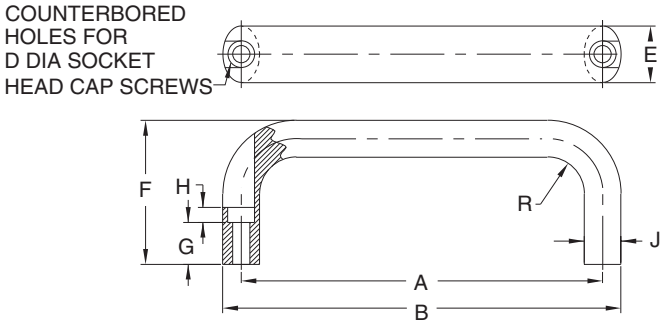

Similar to the handles above, except counterbored for socket-head cap screws. Attractive, modern-design aluminum handle provides a comfortable grip with good ergonomic features. Durable black powder-coated pebble finish. Choice of four handle sizes.

ALUMINUM — COUNTERBORED

PART NO.	A	B	D	E	F	G	H	J	R
CL-116-PHRC-4	4.57	5.08	1/4 or M6	1.02	2.09	.39	.28	.67	.67
CL-132-PHRC-4	5.20	5.71			2.17				
CL-164-PHRC-4	6.46	6.97			2.24				
CL-196-PHRC-4	7.72	8.23							

Carr Lane®
MANUFACTURING CO.
4200 Carr Lane Ct., P.O. Box 191970
St. Louis, Missouri 63119-7970 USA
Phone: 314-647-6200, FAX: 314-647-5736
Web Site: www.carrlane.com

(Rev. 6-08)

SPRING PLUNGERS

STEEL – BODY: 12L14 STEEL, BLACK OXIDE FINISH (METRIC SIZES ZINC PLATED CLEAR CHROMATE). PLUNGER NOSE: 12L14 STEEL, CARBURIZED-HARDENED, BLACK OXIDE FINISH OR ZINC PLATED CLEAR CHROMATE (OR DELRIN). LOCKING ELEMENT: NYLON 101. SPRING: MUSIC WIRE.
STAINLESS STEEL – BODY: 300-SERIES STAINLESS. PLUNGER NOSE: 300-SERIES STAINLESS (OR DELRIN). LOCKING ELEMENT: NYLON 101. SPRING: 302 STAINLESS.

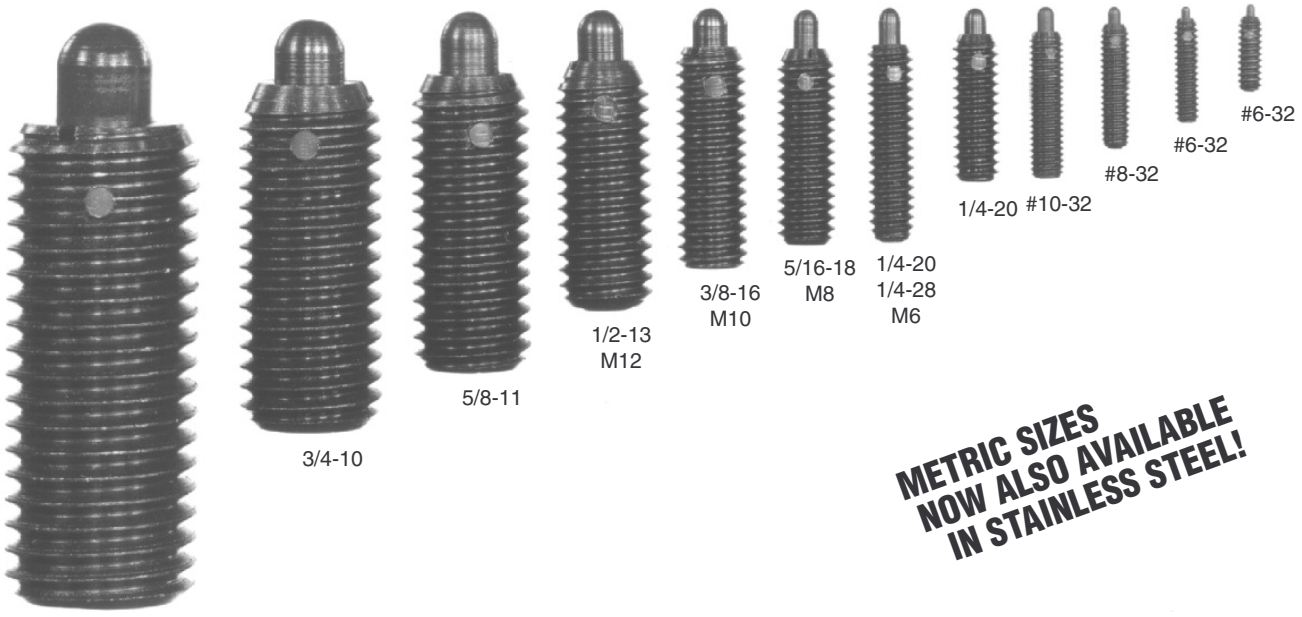

METRIC SIZES NOW ALSO AVAILABLE IN STAINLESS STEEL!

Self-contained plunger-and-spring device available in many sizes and forces. Long bearing length on plunger for smooth operation. Locking element holds the unit securely in place after installation. Install and/or adjust from either end (when using the slot at the plunger end, install with a Plunger Wrench to avoid over-compressing the spring).

Available in thread sizes from #6-32 to 1"-8 (M6 to M12 in metric). Choice of light or heavy force in each thread size. Available in steel, with hardened plunger nose, or stainless steel. Optionally available with a Delrin® nose to prevent marring. Note: catalog photos are actual size.

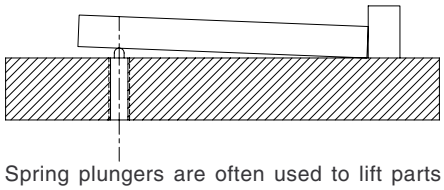

Spring plungers are often used to lift parts after machining to make unloading easier.

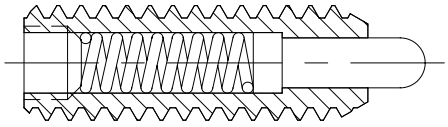

Nose Extended

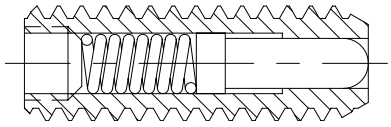

Nose Retracted

PLUNGER NOSE COLOR CODES

BODY	NOSE	FORCE	COLOR CODE
STEEL	STEEL	LIGHT	SILVER
		HEAVY	BLACK
	DELRIN	LIGHT	WHITE
		HEAVY	BROWN
STAINLESS	STAINLESS	LIGHT	PLAIN
		HEAVY	PLAIN
	DELRIN	LIGHT	WHITE
		HEAVY	BROWN

Carr Lane®
MANUFACTURING CO.
4200 Carr Lane Ct., P.O. Box 191970
St. Louis, Missouri 63119-7970 USA
Phone: 314-647-6200, FAX: 314-647-5736
Web Site: www.carrlane.com

(Rev. 6-08)

SPRING PLUNGERS

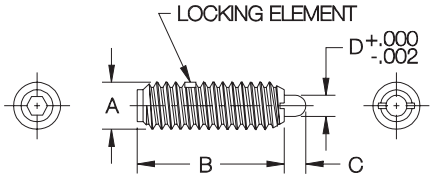

STANDARD PLUNGER NOSE, LIGHT FORCE (USA)

PART NO.			END FORCE (LBS)				
STEEL	STAINLESS	A	INITIAL	FINAL	B	C	D DIA
CL-10-SPS-2	CL-10-SSPS-2	#6-32	0.5	1.5	17/32	1/16	.046
CL-20-SPS-2	CL-20-SSPS-2	#8-32	0.7	2.3	5/8	3/32	.070
CL-30-SPS-2	CL-30-SSPS-2	#10-32	1.3	2.7	3/4	1/8	.093
CL-40-SPS-2	CL-40-SSPS-2	1/4-20	1	4	1	3/16	.119
CL-41-SPS-2	CL-41-SSPS-2	1/4-28					
CL-50-SPS-2	CL-50-SSPS-2	5/16-18	1.5	4.5	1	3/16	.135
CL-60-SPS-2	CL-60-SSPS-2	3/8-16	2.8	7.2	1-1/8	3/16	.186
CL-70-SPS-2	CL-70-SSPS-2	1/2-13	2.7	9.3	1-1/4	1/4	.248
CL-80-SPS-2	—	5/8-11	3.5	10.5	1-1/2	5/16	.310
CL-90-SPS-2	—	3/4-10	4	16	1-3/4	5/16	.374
CL-95-SPS-2	—	1"-8	4	31	2-13/32	1/2	.499

DELRIN® PLUNGER NOSE, LIGHT FORCE (USA)

PART NO.			END FORCE (LBS)				
STEEL	STAINLESS	A	INITIAL	FINAL	B	C	D DIA
—	—	#6-32	—	—	—	—	—
CL-20-SPN-2	CL-20-SSPN-2	#8-32	0.7	2.3	5/8	3/32	.070
CL-30-SPN-2	CL-30-SSPN-2	#10-32	1.3	2.7	3/4	1/8	.093
CL-40-SPN-2	CL-40-SSPN-2	1/4-20	1	4	1	3/16	.119
—	—	1/4-28	—	—	—	—	—
CL-50-SPN-2	CL-50-SSPN-2	5/16-18	1.5	4.5	1	3/16	.135
CL-60-SPN-2	CL-60-SSPN-2	3/8-16	2.8	7.2	1-1/8	3/16	.186
CL-70-SPN-2	CL-70-SSPN-2	1/2-13	2.7	9.3	1-1/4	1/4	.248
CL-80-SPN-2	—	5/8-11	3.5	10.5	1-1/2	5/16	.310
—	—	3/4-10	—	—	—	—	—
—	—	1"-8	—	—	—	—	—

STANDARD PLUNGER NOSE, HEAVY FORCE (USA)

PART NO.			END FORCE (LBS)				
STEEL	STAINLESS	A	INITIAL	FINAL	B	C	D DIA
CL-11-SPS-1	CL-11-SSPS-1	#6-32	1.0	1.6	3/8	1/16	.046
CL-10-SPS-1	CL-10-SSPS-1		1.5	4.5	17/32		
CL-20-SPS-1	CL-20-SSPS-1	#8-32	2.7	7.3	5/8	3/32	.070
CL-30-SPS-1	CL-30-SSPS-1	#10-32	2.9	11.1	3/4	1/8	.093
CL-42-SPS-1	CL-42-SSPS-1	1/4-20	2	9	3/4	1/8	.119
CL-40-SPS-1	CL-40-SSPS-1		3	13	1	3/16	
CL-41-SPS-1	CL-41-SSPS-1	1/4-28					
CL-50-SPS-1	CL-50-SSPS-1	5/16-18	3	15	1	3/16	.135
CL-60-SPS-1	CL-60-SSPS-1	3/8-16	5.5	14.5	1-1/8	3/16	.186
CL-70-SPS-1	CL-70-SSPS-1	1/2-13	6.6	17.4	1-1/4	1/4	.248
CL-80-SPS-1	—	5/8-11	10.5	25.5	1-1/2	5/16	.310
CL-90-SPS-1	—	3/4-10	6.7	37.3	1-3/4	5/16	.374
CL-95-SPS-1	—	1"-8	16	68	2-13/32	1/2	.499

DELRIN® PLUNGER NOSE, HEAVY FORCE (USA)

PART NO.			END FORCE (LBS)				
STEEL	STAINLESS	A	INITIAL	FINAL	B	C	D DIA
—	—	#6-32	—	—	—	—	—
—	—		—	—	—	—	—
CL-20-SPN-1	CL-20-SSPN-1	#8-32	2.7	7.3	5/8	3/32	.070
CL-30-SPN-1	CL-30-SSPN-1	#10-32	2.9	11.1	3/4	1/8	.093
—	—	1/4-20	—	—	—	—	—
CL-40-SPN-1	CL-40-SSPN-1		3	13	1	3/16	.119
—	—	1/4-28	—	—	—	—	—
CL-50-SPN-1	CL-50-SSPN-1	5/16-18	3	15	1	3/16	.135
CL-60-SPN-1	CL-60-SSPN-1	3/8-16	5.5	14.5	1-1/8	3/16	.186
CL-70-SPN-1	CL-70-SSPN-1	1/2-13	6.6	17.4	1-1/4	1/4	.248
CL-80-SPN-1	—	5/8-11	10.5	25.5	1-1/2	5/16	.310
—	—	3/4-10	—	—	—	—	—
—	—	1"-8	—	—	—	—	—

STANDARD PLUNGER NOSE, LIGHT FORCE (METRIC)

PART NO.			END FORCE (LBS)				
STEEL	STAINLESS	A	INITIAL	FINAL	B	C	D DIA
CLM-6-SPS-1	CLM-6-SSPS-1	M6	1.0	4.0	1	3/16	.119
CLM-8-SPS-1	CLM-8-SSPS-1	M8	1.5	4.5	1	3/16	.135
CLM-10-SPS-1	CLM-10-SSPS-1	M10	2.8	7.2	1-1/8	3/16	.186
CLM-12-SPS-1	CLM-12-SSPS-1	M12	2.7	9.3	1-1/4	1/4	.248

DELRIN® PLUNGER NOSE, LIGHT FORCE (METRIC)

PART NO.			END FORCE (LBS)				
STEEL	STAINLESS	A	INITIAL	FINAL	B	C	D DIA
CLM-6-SPN-1	CLM-6-SSPN-1	M6	1.0	4.0	1	3/16	.119
CLM-8-SPN-1	CLM-8-SSPN-1	M8	1.5	4.5	1	3/16	.135
CLM-10-SPN-1	CLM-10-SSPN-1	M10	2.8	7.2	1-1/8	3/16	.186
CLM-12-SPN-1	CLM-12-SSPN-1	M12	2.7	9.3	1-1/4	1/4	.248

STANDARD PLUNGER NOSE, HEAVY FORCE (METRIC)

PART NO.			END FORCE (LBS)				
STEEL	STAINLESS	A	INITIAL	FINAL	B	C	D DIA
CLM-6-SPS-2	CLM-6-SSPS-2	M6	3.0	13.0	1	3/16	.119
CLM-8-SPS-2	CLM-8-SSPS-2	M8	3.0	15.0	1	3/16	.135
CLM-10-SPS-2	CLM-10-SSPS-2	M10	5.5	14.5	1-1/8	3/16	.186
CLM-12-SPS-2	CLM-12-SSPS-2	M12	6.6	17.4	1-1/4	1/4	.248

DELRIN® PLUNGER NOSE, HEAVY FORCE (METRIC)

PART NO.			END FORCE (LBS)				
STEEL	STAINLESS	A	INITIAL	FINAL	B	C	D DIA
CLM-6-SPN-2	CLM-6-SSPN-2	M6	3.0	13.0	1	3/16	.119
CLM-8-SPN-2	CLM-8-SSPN-2	M8	3.0	15.0	1	3/16	.135
CLM-10-SPN-2	CLM-10-SSPN-2	M10	5.5	14.5	1-1/8	3/16	.186
CLM-12-SPN-2	CLM-12-SSPN-2	M12	5.5	17.4	1-1/4	1/4	.248

Carr Lane®
MANUFACTURING CO.
4200 Carr Lane Ct., P.O. Box 191970
St. Louis, Missouri 63119-7970 USA
Phone: 314-647-6200, FAX: 314-647-5736
Web Site: www.carrlane.com

(Rev. 7-08)

SHORT SPRING PLUNGERS

STEEL – BODY: 12L14 STEEL, BLACK OXIDE FINISH. PLUNGER NOSE: 12L14 STEEL, CARBURIZED-HARDENED, BLACK OXIDE FINISH OR ZINC PLATED CLEAR CHROMATE (OR DELRIN). LOCKING ELEMENT: NYLON 101. SPRING: MUSIC WIRE.
STAINLESS STEEL – BODY: 300-SERIES STAINLESS. PLUNGER NOSE: 300-SERIES STAINLESS (OR DELRIN).
LOCKING ELEMENT: NYLON 101. SPRING: 302 STAINLESS.

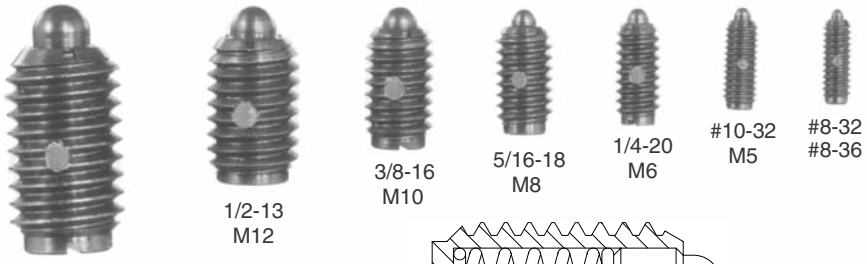

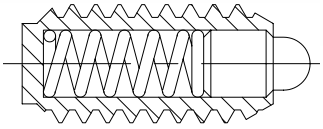

Nose Extended

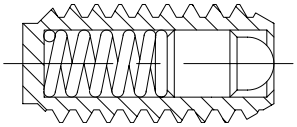

Nose Retracted

NOW ALSO AVAILABLE IN METRIC!

Compact, short-stroke version of our standard Spring Plungers. Self-contained plunger-and-spring device available in many sizes and forces. Locking element holds the unit securely in place after installation. Install and/or adjust from either end (when using the slot at the plunger end, install with a Plunger Wrench to avoid over-compressing the spring).

Available in thread sizes from #8-32 to 5/8-11 (M5 to M12 in metric). Choice of light or heavy force in each thread size. Available in steel, with a hardened plunger nose, or stainless steel. Optionally available with a Delrin® nose to prevent marring. Note: catalog photos are actual size.

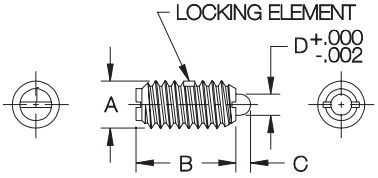

STANDARD PLUNGER NOSE, LIGHT FORCE (USA)

PART NO. STEEL	PART NO. STAINLESS	A	END FORCE (LBS) INITIAL	END FORCE (LBS) FINAL	B	C	D DIA
CL-21-SPS-2	CL-21-SSPS-2	#8-32	0.5	1.5	7/16	.052	.070
CL-22-SPS-2	CL-22-SSPS-2	#8-36					
CL-31-SPS-2	CL-31-SSPS-2	#10-32	0.75	2.5	15/32	.065	.093
CL-43-SPS-2	CL-43-SSPS-2	1/4-20	1	3.5	17/32	.078	.119
CL-51-SPS-2	CL-51-SSPS-2	5/16-18	1.5	4	9/16	.084	.135
CL-61-SPS-2	CL-61-SSPS-2	3/8-16	1.5	5	5/8	.110	.186
CL-71-SPS-2	CL-71-SSPS-2	1/2-13	1.75	5.5	3/4	.151	.248
CL-81-SPS-2	—	5/8-11	2	8.5	1-1/16	.215	.310

DELRIN® PLUNGER NOSE, LIGHT FORCE (USA)

PART NO. STEEL	PART NO. STAINLESS	A	END FORCE (LBS) INITIAL	END FORCE (LBS) FINAL	B	C	D DIA
CL-21-SPN-2	CL-21-SSPN-2	#8-32	0.5	1.5	7/16	.052	.070
CL-22-SPN-2	CL-22-SSPN-2	#8-36					
CL-31-SPN-2	CL-31-SSPN-2	#10-32	0.75	2.5	15/32	.065	.093
CL-43-SPN-2	CL-43-SSPN-2	1/4-20	1	3.5	17/32	.078	.119
CL-51-SPN-2	CL-51-SSPN-2	5/16-18	1.5	4	9/16	.084	.135
CL-61-SPN-2	CL-61-SSPN-2	3/8-16	1.5	5	5/8	.110	.186
CL-71-SPN-2	CL-71-SSPN-2	1/2-13	1.75	5.5	3/4	.151	.248
CL-81-SPN-2	—	5/8-11	2	8.5	1-1/16	.215	.310

STANDARD PLUNGER NOSE, HEAVY FORCE (USA)

CL-21-SPS-1	CL-21-SSPS-1	#8-32	1.5	4.75	7/16	.052	.070
CL-22-SPS-1	CL-22-SSPS-1	#8-36					
CL-31-SPS-1	CL-31-SSPS-1	#10-32	1.75	6.25	15/32	.065	.093
CL-43-SPS-1	CL-43-SSPS-1	1/4-20	3	10.5	17/32	.078	.119
CL-51-SPS-1	CL-51-SSPS-1	5/16-18	3.75	15.5	9/16	.084	.135
CL-61-SPS-1	CL-61-SSPS-1	3/8-16	4.5	18.5	5/8	.110	.186
CL-71-SPS-1	CL-71-SSPS-1	1/2-13	5	28	3/4	.151	.248
CL-81-SPS-1	—	5/8-11	7	50	1-1/16	.215	.310

DELRIN® PLUNGER NOSE, HEAVY FORCE (USA)

CL-21-SPN-1	CL-21-SSPN-1	#8-32	1.5	4.75	7/16	.052	.070
CL-22-SPN-1	CL-22-SSPN-1	#8-36					
CL-31-SPN-1	CL-31-SSPN-1	#10-32	1.75	6.25	15/32	.065	.093
CL-43-SPN-1	CL-43-SSPN-1	1/4-20	3	10.5	17/32	.078	.119
CL-51-SPN-1	CL-51-SSPN-1	5/16-18	3.75	15.5	9/16	.084	.135
CL-61-SPN-1	CL-61-SSPN-1	3/8-16	4.5	18.5	5/8	.110	.186
CL-71-SPN-1	CL-71-SSPN-1	1/2-13	5	28	3/4	.151	.248
CL-81-SPN-1	—	5/8-11	7	50	1-1/16	.215	.310

STANDARD PLUNGER NOSE, LIGHT FORCE (METRIC)

CLM-51-SPS-1	—	M5	.7	2.5	.47	.065	.093
CLM-61-SPS-1	—	M6	1	3.5	.53	.078	.119
CLM-81-SPS-1	—	M8	1.5	4	.56	.084	.135
CLM-101-SPS-1	—	M10	1.5	5	.62	.110	.186
CLM-121-SPS-1	—	M12	1.8	5.5	.75	.151	.248

DELRIN® PLUNGER NOSE, LIGHT FORCE (METRIC)

CLM-51-SPN-1	—	M5	.7	2.5	.47	.065	.093
CLM-61-SPN-1	—	M6	1	3.5	.53	.078	.119
CLM-81-SPN-1	—	M8	1.5	4	.56	.084	.135
CLM-101-SPN-1	—	M10	1.5	5	.62	.110	.186
CLM-121-SPN-1	—	M12	1.8	5.5	.75	.151	.248

STANDARD PLUNGER NOSE, HEAVY FORCE (METRIC)

CLM-51-SPS-2	—	M5	1.8	6.3	.47	.065	.093
CLM-61-SPS-2	—	M6	3	10.5	.53	.078	.119
CLM-81-SPS-2	—	M8	3.8	15.5	.56	.084	.135
CLM-101-SPS-2	—	M10	4.5	18.5	.62	.110	.186
CLM-121-SPS-2	—	M12	5	28	.75	.151	.248

DELRIN® PLUNGER NOSE, HEAVY FORCE (METRIC)

CLM-51-SPN-2	—	M5	1.8	6.3	.47	.065	.093
CLM-61-SPN-2	—	M6	3	10.5	.53	.078	.119
CLM-81-SPN-2	—	M8	3.8	15.5	.56	.084	.135
CLM-101-SPN-2	—	M10	4.5	18.5	.62	.110	.186
CLM-121-SPN-2	—	M12	5	28	.75	.151	.248

Carr Lane®
MANUFACTURING CO.
4200 Carr Lane Ct., P.O. Box 191970
St. Louis, Missouri 63119-7970 USA
Phone: 314-647-6200, FAX: 314-647-5736
Web Site: www.carrlane.com

(Rev. 7-08)

SHORT SPRING PLUNGERS WITH EXTENDED TRAVEL

STEEL- BODY: 12L14 STEEL, BLACK OXIDE FINISH. PLUNGER NOSE: 12L14 STEEL, CARBURIZED-HARDENED, BLACK OXIDE FINISH OR ZINC PLATED CLEAR CHROMATE (OR DELRIN). LOCKING ELEMENT: NYLON 101. SPRING: MUSIC WIRE
STAINLESS STEEL- BODY: 300-SERIES STAINLESS. PLUNGER NOSE: 300-SERIES STAINLESS (OR DELRIN).
LOCKING ELEMENT: NYLON 101. SPRING: 302 STAINLESS.

These Spring Plungers have the body length of a Short Spring Plunger while providing the longer stroke of a standard Spring Plunger (spring force is somewhat reduced). This self-contained plunger-and-spring device is available in a wide range of sizes. Locking element holds the unit securely in place after installation. Install and/or adjust from either end (when using the slot at the plunger end, install with a Plunger Wrench to avoid over-compressing the spring).

Available in thread sizes from #8-32 to 5/8-11 (M5 to M12 in metric). Available in steel, with a hardened plunger nose, or stainless steel. Optionally available with a Delrin® nose to prevent marring. Note: catalog photos are actual size.

NOW ALSO AVAILABLE IN METRIC!

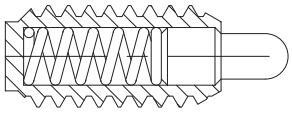

Nose Extended

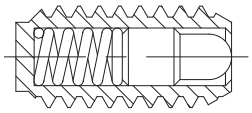

Nose Retracted

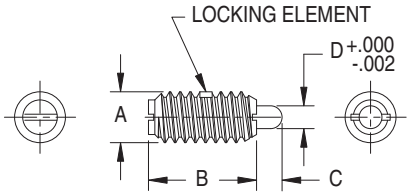

STANDARD PLUNGER NOSE (USA)

PART NO.			END FORCE (LBS)				D
STEEL	STAINLESS	A	INITIAL	FINAL	B	C	DIA
CL-25-SPS-1	CL-25-SSPS-1	#8-32	1.0	3.2	7/16	.093	.070
CL-26-SPS-1	CL-26-SSPS-1	#8-36					
CL-35-SPS-1	CL-35-SSPS-1	#10-32	1.2	4.2	15/32	.125	.093
CL-45-SPS-1	CL-45-SSPS-1	1/4-20	2.0	7.0	17/32	.187	.119
CL-55-SPS-1	CL-55-SSPS-1	5/16-18	2.5	10.5	9/16	.187	.135
CL-65-SPS-1	CL-65-SSPS-1	3/8-16	3.0	12.5	5/8	.187	.186
CL-75-SPS-1	CL-75-SSPS-1	1/2-13	3.5	19	3/4	.250	.248
CL-85-SPS-1	—	5/8-11	4.5	34	1-1/16	.312	.310

DELRIN® PLUNGER NOSE (USA)

PART NO.			END FORCE (LBS)				D
STEEL	STAINLESS	A	INITIAL	FINAL	B	C	DIA
CL-25-SPN-1	CL-25-SSPN-1	#8-32	1.0	3.2	7/16	.093	.070
CL-26-SPN-1	CL-26-SSPN-1	#8-36					
CL-35-SPN-1	CL-35-SSPN-1	#10-32	1.2	4.2	15/32	.125	.093
CL-45-SPN-1	CL-45-SSPN-1	1/4-20	2.0	7.0	17/32	.187	.119
CL-55-SPN-1	CL-55-SSPN-1	5/16-18	2.5	10.5	9/16	.187	.135
CL-65-SPN-1	CL-65-SSPN-1	3/8-16	3.0	12.5	5/8	.187	.186
CL-75-SPN-1	CL-75-SSPN-1	1/2-13	3.5	19	3/4	.250	.248
CL-85-SPN-1	—	5/8-11	4.5	34	1-1/16	.312	.310

STANDARD PLUNGER NOSE (METRIC)

PART NO.			END FORCE (LBS)				D
STEEL	STAINLESS	A	INITIAL	FINAL	B	C	DIA
CLM-55-SPS-1	—	M5	1.2	4.2	.47	.125	.093
CLM-65-SPS-1	—	M6	2.0	7.0	.53	.187	.119
CLM-85-SPS-1	—	M8	2.5	10.5	.56	.187	.135
CLM-105-SPS-1	—	M10	3.0	12.5	.62	.187	.186
CLM-125-SPS-1	—	M12	3.5	19	.75	.250	.248

DELRIN® PLUNGER NOSE (METRIC)

PART NO.			END FORCE (LBS)				D
STEEL	STAINLESS	A	INITIAL	FINAL	B	C	DIA
CLM-55-SPN-1	—	M5	1.2	4.2	.47	.125	.093
CLM-65-SPN-1	—	M6	2.0	7.0	.53	.187	.119
CLM-85-SPN-1	—	M8	2.5	10.5	.56	.187	.135
CLM-105-SPN-1	—	M10	3.0	12.5	.62	.187	.186
CLM-125-SPN-1	—	M12	3.5	19	.75	.250	.248

Carr Lane®
MANUFACTURING CO.
4200 Carr Lane Ct., P.O. Box 191970
St. Louis, Missouri 63119-7970 USA
Phone: 314-647-6200, FAX: 314-647-5736
Web Site: www.carrlane.com

(Rev. 4-08)

PRESS-FIT SPRING PLUNGERS

STEEL – BODY: 12L14 STEEL, BLACK OXIDE FINISH. PLUNGER NOSE: 12L14 STEEL, CARBURIZED-HARDENED, BLACK OXIDE FINISH OR ZINC PLATED CLEAR CHROMATE (OR DELRIN). SPRING: MUSIC WIRE.
STAINLESS STEEL – BODY: 300-SERIES STAINLESS. PLUNGER NOSE: 300-SERIES STAINLESS (OR DELRIN).
SPRING: 302 STAINLESS

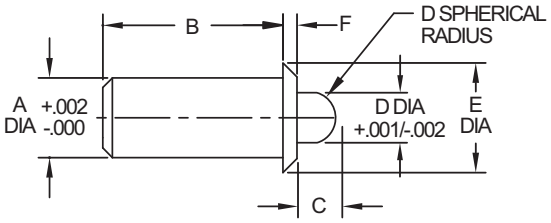

Simple, economical spring-loaded plunger ideal for installation in softer materials, such as aluminum, wood or plastic. Sturdy shoulder provides a fixed seating position and positively resists detent force (installation hole can be counterbored to recess the shoulder). Use when a threaded hole would be impractical and/or adjustment is not required. Choice of six sizes, each in light or heavy force. Available in steel, with a hardened plunger nose, or stainless steel. Optionally available with a Delrin® nose to prevent marring. Note: Catalog photos are actual size.

STANDARD PLUNGER NOSE, LIGHT FORCE

PART NO.		A	END FORCE (LBS)					E	
STEEL	STAINLESS	DIA	INITIAL	FINAL	B	C	D	DIA	F
CL-2-PSP-1	CL-2-PSPS-1	.125	.5	1	.252	.062	.070	.187	.032
CL-3-PSP-1	CL-3-PSPS-1	.188	.8	2.5	.405	.094	.121	.250	.035
CL-4-PSP-1	CL-4-PSPS-1	.250	1.5	3	.481	.125	.168	.312	.044
CL-5-PSP-1	CL-5-PSPS-1	.312	2	5	.643	.151	.186	.375	.045
CL-6-PSP-1	CL-6-PSPS-1	.375	2.5	7	.785	.187	.234	.500	.078
CL-8-PSP-1	CL-8-PSPS-1	.500	4	9	1.130	.250	.332	.688	.088

STANDARD PLUNGER NOSE, HEAVY FORCE

PART NO.		A	END FORCE (LBS)					E	
STEEL	STAINLESS	DIA	INITIAL	FINAL	B	C	D	DIA	F
CL-2-PSP-2	CL-2-PSPS-2	.125	1	2	.252	.062	.070	.187	.032
CL-3-PSP-2	CL-3-PSPS-2	.188	1.5	4.5	.405	.094	.121	.250	.035
CL-4-PSP-2	CL-4-PSPS-2	.250	2.5	6	.481	.125	.168	.312	.044
CL-5-PSP-2	CL-5-PSPS-2	.312	4	10	.643	.151	.186	.375	.045
CL-6-PSP-2	CL-6-PSPS-2	.375	5	14	.785	.187	.234	.500	.078
CL-8-PSP-2	CL-8-PSPS-2	.500	8	18	1.130	.250	.332	.688	.088

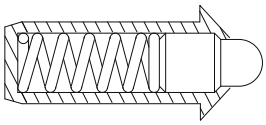

Nose Extended

DELRIN® PLUNGER NOSE, LIGHT FORCE

PART NO.		A	END FORCE (LBS)					E	
STEEL	STAINLESS	DIA	INITIAL	FINAL	B	C	D	DIA	F
CL-2-PSPN-1	CL-2-PSPSN-1	.125	.5	1	.252	.062	.070	.187	.032
CL-3-PSPN-1	CL-3-PSPSN-1	.188	.8	2.5	.405	.094	.121	.250	.035
CL-4-PSPN-1	CL-4-PSPSN-1	.250	1.5	3	.481	.125	.168	.312	.044
CL-5-PSPN-1	CL-5-PSPSN-1	.312	2	5	.643	.151	.186	.375	.045
CL-6-PSPN-1	CL-6-PSPSN-1	.375	2.5	7	.785	.187	.234	.500	.078
CL-8-PSPN-1	CL-8-PSPSN-1	.500	4	9	1.130	.250	.332	.688	.088

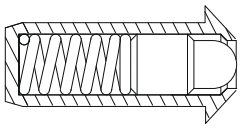

Nose Retracted

DELRIN® PLUNGER NOSE, HEAVY FORCE

PART NO.		A	END FORCE (LBS)					E	
STEEL	STAINLESS	DIA	INITIAL	FINAL	B	C	D	DIA	F
CL-2-PSPN-2	CL-2-PSPSN-2	.125	1	2	.252	.062	.070	.187	.032
CL-3-PSPN-2	CL-3-PSPSN-2	.188	1.5	4.5	.405	.094	.121	.250	.035
CL-4-PSPN-2	CL-4-PSPSN-2	.250	2.5	6	.481	.125	.168	.312	.044
CL-5-PSPN-2	CL-5-PSPSN-2	.312	4	10	.643	.151	.186	.375	.045
CL-6-PSPN-2	CL-6-PSPSN-2	.375	5	14	.785	.187	.234	.500	.078
CL-8-PSPN-2	CL-8-PSPSN-2	.500	8	18	1.130	.250	.332	.688	.088

Carr Lane®
MANUFACTURING CO.
4200 Carr Lane Ct., P.O. Box 191970
St. Louis, Missouri 63119-7970 USA
Phone: 314-647-6200, FAX: 314-647-5736
Web Site: www.carrlane.com

(Rev. 7-05)

TECHNICAL INFORMATION
BALL PLUNGERS

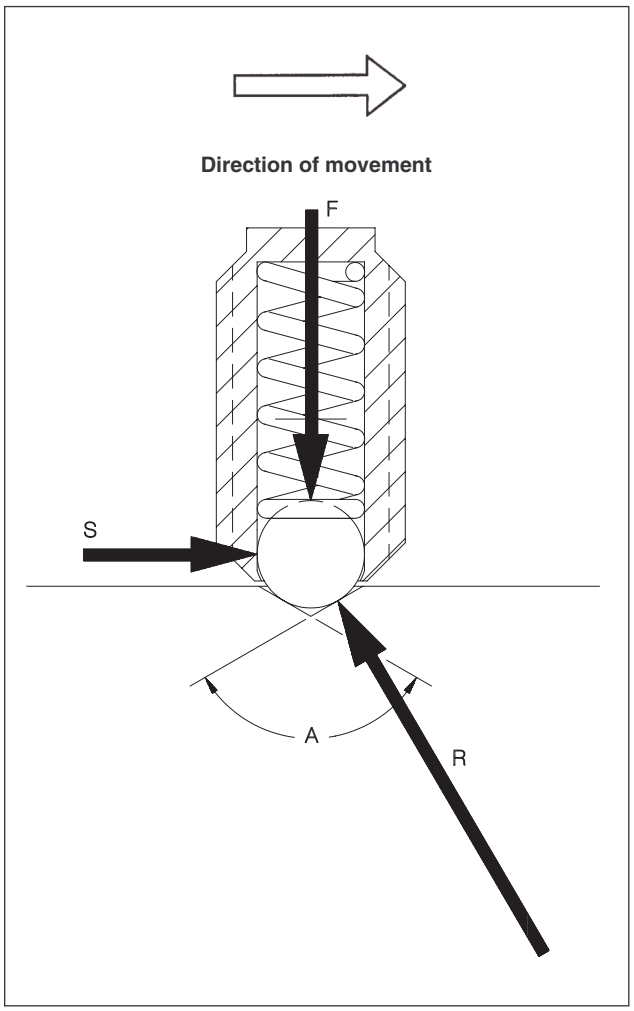

BREAKAWAY FORCE:

To calculate the side force needed to slide a ball plunger out of its detent hole, refer to the free-body force diagram to the left.
In the diagram,

S= Side force
F= End force (spring force)
R= Reaction force
A= Countersink angle

The reaction force (R) is perpendicular to the contact surface. Solving for side force (S):

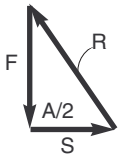

$$S = \frac{F}{\tan(A/2)}$$

End force (F) depends on how far the spring will be compressed, which depends on how far away from the sliding surface the ball plunger is installed. Maximum spring compression and end force occur as the ball breaks out of its hole.

BREAKAWAY-FORCE EXAMPLE:

A CL-40-BP-3 ball plunger (1/4-20) exerts an initial force of 4 lbs, a half-way force of 8 lbs, and a final force of 12 lbs. With a 90° countersink angle and half-way compression:

$$S = \frac{8 \text{ lbs}}{\tan(90°/2)} = 8 \text{ lbs}$$

With a 120° countersink angle and half-way compression:

$$S = \frac{8 \text{ lbs}}{\tan(120°/2)} = 4.6 \text{ lbs}$$

INSTALLATION:

To obtain full locking torque, countersink the installation hole to avoid cutting the locking element. Countersink at a 90-100° angle to a diameter 1/32" larger than the major thread diameter. Then, as you screw the plunger into its hole, the locking element will be compressed, not cut.
See below for plunger wrenches.

Carr Lane®
MANUFACTURING CO.
4200 Carr Lane Ct., P.O. Box 191970
St. Louis, Missouri 63119-7970 USA
Phone: 314-647-6200, FAX: 314-647-5736
Web Site: www.carrlane.com

(Rev. 1-07)

BALL PLUNGERS

STEEL – BODY: 12L14 STEEL, ZINC PLATED OR BLACK OXIDE FINISH. BALL: 440C STAINLESS.
LOCKING ELEMENT: NYLON 101. SPRING: MUSIC WIRE
STAINLESS STEEL – BODY: 300-SERIES STAINLESS. BALL: 440C STAINLESS.
LOCKING ELEMENT: NYLON 101. SPRING: 302 STAINLESS.
DELRIN – BODY: DELRIN 500, WHITE, BLACK, OR YELLOW. BALL: 440C STAINLESS. SPRING: 302 STAINLESS

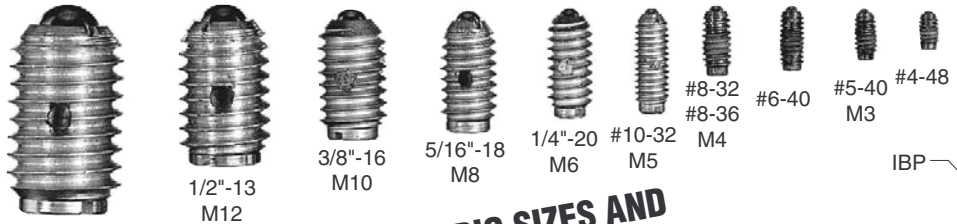

ADDITIONAL METRIC SIZES AND DELRIN® BODIES NOW AVAILABLE!

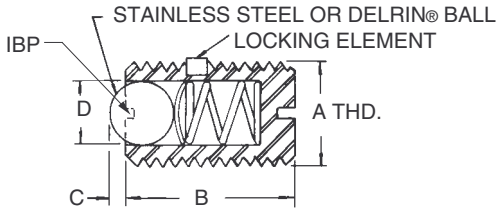

STANDARD BALL (USA)

PART NO.			A	END FORCE (LBS)		B	C	D	COLOR CODE
STEEL BODY	STAINLESS BODY	DELRIN BODY		INITIAL	FINAL			DIA	
CL-5-BP-1	CL-5-SBP-1	—	#4-48	1/8	1/2	3/16	.020	.062	PLAIN
CL-10-BP-1	CL-10-SBP-1	—	#5-40	1/4	3/4	1/4			
CL-15-BP-1	CL-15-SBP-1	—	#6-40	1/2	1	5/16	.023	.078	
CL-22-BP-1	CL-22-SBP-1	—	#8-32	1/2	1-1/4	11/32	.025	.093	
CL-20-BP-1	CL-20-SBP-1	—	#8-36						
CL-30-BP-1	CL-30-SBP-1	—	#10-32	1/2	1-1/2	33/64	.025	.093	PLAIN
CL-30-BP-2	CL-30-SBP-2	—		1-1/2	3				BLACK
CL-30-BP-3	CL-30-SBP-3	—		2	5				YELLOW
CL-40-BP-1	CL-40-SBP-1	CL-40-DBP-1-LL	1/4-20	2	4	17/32	.035	.125	PLAIN/WHITE
CL-40-BP-2	CL-40-SBP-2	CL-40-DBP-2-LL		3	7				BLACK
CL-40-BP-3	CL-40-SBP-3	CL-40-DBP-3-LL		4	12				YELLOW
CL-50-BP-1	CL-50-SBP-1	CL-50-DBP-1-LL	5/16-18	2	4-1/2	37/64	.040	.156	PLAIN/WHITE
CL-50-BP-2	CL-50-SBP-2	CL-50-DBP-2-LL		4	9				BLACK
CL-50-BP-3	CL-50-SBP-3	CL-50-DBP-3-LL		6	17				YELLOW
CL-60-BP-1	CL-60-SBP-1	CL-60-DBP-1-LL	3/8-16	2-1/2	5	5/8	.048	.187	PLAIN/WHITE
CL-60-BP-2	CL-60-SBP-2	CL-60-DBP-2-LL		5	10				BLACK
CL-60-BP-3	CL-60-SBP-3	CL-60-DBP-3-LL		6	21				YELLOW
CL-70-BP-1	CL-70-SBP-1	—	1/2-13	3	6	3/4	.072	.281	PLAIN
CL-70-BP-2	CL-70-SBP-2	—		6	12				BLACK
CL-70-BP-3	CL-70-SBP-3	—		6	30				YELLOW
CL-80-BP-1	CL-80-SBP-1	—	5/8-11	4-1/2	9	63/64	.096	.375	PLAIN
CL-80-BP-2	CL-80-SBP-2	—		9	18				BLACK
CL-80-BP-3	CL-80-SBP-3	—		7	50				YELLOW

STANDARD BALL (METRIC)

—	CLM-3-SBP-1	—	M3	.12	.5	.19	.020	.062	PLAIN
CLM-4-BP-1	CLM-4-SBP-1	—	M4	0.6	1.1	.34	.024	.094	PLAIN
CLM-5-BP-2	CLM-5-SBP-2	—	M5	.5	1.5	.51	.024	.094	WHITE
CLM-5-BP-1	CLM-5-SBP-1	—		1.5	2.9				GREEN
CLM-5-BP-3	CLM-5-SBP-3	—		2	4.9				YELLOW
CLM-6-BP-2	CLM-6-SBP-2	—	M6	2	4	.53	.035	.125	WHITE
CLM-6-BP-1	CLM-6-SBP-1	—		2.9	7				GREEN
CLM-6-BP-3	CLM-6-SBP-3	—		4	12				YELLOW
CLM-8-BP-2	CLM-8-SBP-2	—	M8	2.2	4.4	.58	.039	.156	WHITE
CLM-8-BP-1	CLM-8-SBP-1	—		3.9	8.8				GREEN
CLM-8-BP-3	CLM-8-SBP-3	—		6.1	17.1				YELLOW
CLM-10-BP-2	CLM-10-SBP-2	—	M10	2.5	5.0	.63	.047	.187	WHITE
CLM-10-BP-1	CLM-10-SBP-1	—		5.0	9.9				GREEN
CLM-10-BP-3	CLM-10-SBP-3	—		6.1	20.9				YELLOW
CLM-12-BP-2	CLM-12-SBP-2	—	M12	3.0	6.1	.75	.079	.281	WHITE
CLM-12-BP-1	CLM-12-SBP-1	—		6.1	12.1				GREEN
CLM-12-BP-3	CLM-12-SBP-3	—		6.1	29.7				YELLOW
CLM-16-BP-2	CLM-16-SBP-2	—	M16	4.5	9	.98	.098	.375	WHITE
CLM-16-BP-1	CLM-16-SBP-1	—		9	18				GREEN
CLM-16-BP-3	CLM-16-SBP-3	—		7	50				YELLOW

Carr Lane®
MANUFACTURING CO.
4200 Carr Lane Ct., P.O. Box 191970
St. Louis, Missouri 63119-7970 USA
Phone: 314-647-6200, FAX: 314-647-5736
Web Site: www.carrlane.com

(Rev. 7-06)

BALL PLUNGERS

STAINLESS STEEL – BODY: 300-SERIES STAINLESS. BALL: WHITE DELRIN 500. SPRING: 302 STAINLESS. LOCKING ELEMENT: NYLON 101.
DELRIN – BODY: DELRIN 500, WHITE, BLACK, OR YELLOW. BALL: WHITE DELRIN 500. SPRING: 302 STAINLESS

Self-contained ball-and-spring device available in many sizes and forces. Available in thread sizes from #4-48 to 5/8-11 (M3 to M16 in metric). Choice of light, medium, or heavy force in most thread sizes. Available in steel, stainless steel or Delrin, all with a 440C stainless steel ball (optionally available with a Delrin® ball). Locking element (steel and stainless only) holds the unit securely in place after installation. Install and/or adjust from either end (when using the slot at the ball end, install with a Plunger Wrench to avoid over-compressing the spring). The three smallest sizes, and all Delrin sizes, have no slot at the ball end. Note: catalog photos are actual size.

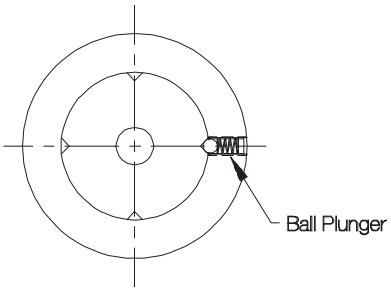

DELRIN® BALL (USA)

PART NO.			END FORCE (LBS)					
STAINLESS BODY	DELRIN BODY	A	INITIAL	FINAL	B	C	D DIA	COLOR CODE
CL-5-SBPN-1	—	#4-48	1/8	1/2	3/16	.020	.062	PLAIN
CL-10-SBPN-1	—	#5-40	1/4	3/4	1/4			
CL-15-SBPN-1	—	#6-40	1/2	1	5/16	.023	.078	
CL-22-SBPN-1	—	#8-32	1/2	1-1/4	11/32	.025	.093	
CL-20-SBPN-1	—	#8-36						
CL-30-SBPN-1	—	#10-32	1/2	1-1/2	33/64	.025	.093	PLAIN
CL-30-SBPN-2	—		1-1/2	3				BLACK
CL-30-SBPN-3	—		2	5				YELLOW
CL-40-SBPN-1	CL-40-DBPN-1-LL	1/4-20	2	4	17/32	.035	.125	PLAIN/WHITE
CL-40-SBPN-2	CL-40-DBPN-2-LL		3	7				BLACK
CL-40-SBPN-3	CL-40-DBPN-3-LL		4	12				YELLOW
CL-50-SBPN-1	CL-50-DBPN-1-LL	5/16-18	2	4-1/2	37/64	.040	.156	PLAIN/WHITE
CL-50-SBPN-2	CL-50-DBPN-2-LL		4	9				BLACK
CL-50-SBPN-3	CL-50-DBPN-3-LL		6	17				YELLOW
CL-60-SBPN-1	CL-60-DBPN-1-LL	3/8-16	2-1/2	5	5/8	.048	.187	PLAIN/WHITE
CL-60-SBPN-2	CL-60-DBPN-2-LL		5	10				BLACK
CL-60-SBPN-3	CL-60-DBPN-3-LL		6	21				YELLOW
CL-70-SBPN-1	—	1/2-13	3	6	3/4	.072	.281	PLAIN
CL-70-SBPN-2	—		6	12				BLACK
CL-70-SBPN-3	—		6	30				YELLOW
CL-80-SBPN-1	—	5/8-11	4-1/2	9	63/64	.096	.375	PLAIN
CL-80-SBPN-2	—		9	18				BLACK
CL-80-SBPN-3	—		7	50				YELLOW

DELRIN® BALL (METRIC)

CLM-3-SBPN-1	—	M3	.12	.5	.19	.020	.062	PLAIN
CLM-4-SBPN-1	—	M4			.34	.024	.094	PLAIN
CLM-5-SBPN-2	—	M5	.5	1.5	.51	.024	.094	WHITE
CLM-5-SBPN-1	—		1.5	2.9				GREEN
CLM-5-SBPN-3	—		2	4.9				YELLOW
CLM-6-SBPN-2	—	M6	2	4	.53	.035	.125	WHITE
CLM-6-SBPN-1	—		2.9	7				GREEN
CLM-6-SBPN-3	—		4	12				YELLOW
CLM-8-SBPN-2	—	M8	2.2	4.4	.58	.039	.156	WHITE
CLM-8-SBPN-1	—		3.9	9				GREEN
CLM-8-SBPN-3	—		6	17				YELLOW
CLM-10-SBPN-2	—	M10	2.5	5	.63	.047	.187	WHITE
CLM-10-SBPN-1	—		5	10				GREEN
CLM-10-SBPN-3	—		6	21				YELLOW
CLM-12-SBPN-2	—	M12	3	6	.75	.079	.281	WHITE
CLM-12-SBPN-1	—		6	12				GREEN
CLM-12-SBPN-3	—		6	30				YELLOW
CLM-16-SBPN-2	—	M16	4.5	9	.98	.098	.375	WHITE
CLM-16-SBPN-1	—		9	18				GREEN
CLM-16-SBPN-3	—		7	50				YELLOW

Carr Lane®
MANUFACTURING CO.
4200 Carr Lane Ct., P.O. Box 191970
St. Louis, Missouri 63119-7970 USA
Phone: 314-647-6200, FAX: 314-647-5736
Web Site: www.carrlane.com

(Rev. 5-08)

PRESS-FIT BALL PLUNGERS

STEEL – BODY: 12L14 STEEL, BLACK OXIDE FINISH. BALL: 440C STAINLESS (OR DELRIN). SPRING: MUSIC WIRE
STAINLESS STEEL – BODY: 300-SERIES STAINLESS. BALL: 440C STAINLESS (OR DELRIN). SPRING: 302 STAINLESS

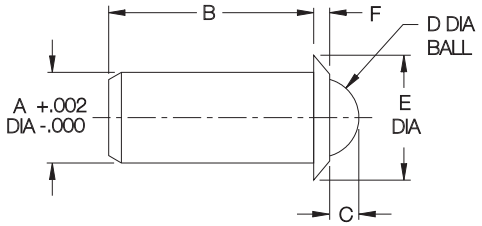

Simple, economical ball plunger ideal for installation in softer materials, such as aluminum, wood or plastic. Sturdy shoulder provides a fixed seating position and positively resists detent force (installation hole can be counterbored to recess the shoulder). Use when a threaded hole would be impractical and/or adjustment is not required. Available in steel or stainless steel. Choice of six sizes, each in light or heavy force, with a stainless steel or Delrin® ball. Note: Catalog photos are actual size.

STANDARD BALL, LIGHT FORCE

PART NO.		A	END FORCE (LBS)				D	E	
STEEL	STAINLESS	DIA	INITIAL	FINAL	B	C	DIA	DIA	F
CL-2-PBP-1	CL-2-PBPS-1	.125	.5	1	.252	.035	.093	.187	.032
CL-3-PBP-1	CL-3-PBPS-1	.188	1	2.5	.405	.058	.156	.250	.035
CL-4-PBP-1	CL-4-PBPS-1	.250	1.5	3.5	.481	.070	.188	.312	.044
CL-5-PBP-1	CL-5-PBPS-1	.312	2	5	.643	.090	.250	.375	.045
CL-6-PBP-1	CL-6-PBPS-1	.375	2.5	7	.785	.110	.312	.500	.078
CL-8-PBP-1	CL-8-PBPS-1	.500	4	9	1.130	.161	.438	.688	.088

STANDARD BALL, HEAVY FORCE

PART NO.		A	END FORCE (LBS)				D	E	
STEEL	STAINLESS	DIA	INITIAL	FINAL	B	C	DIA	DIA	F
CL-2-PBP-2	CL-2-PBPS-2	.125	.75	2.5	.252	.035	.093	.187	.032
CL-3-PBP-2	CL-3-PBPS-2	.188	2	5	.405	.058	.156	.250	.035
CL-4-PBP-2	CL-4-PBPS-2	.250	3	7	.481	.070	.188	.312	.044
CL-5-PBP-2	CL-5-PBPS-2	.312	4	10	.643	.090	.250	.375	.045
CL-6-PBP-2	CL-6-PBPS-2	.375	5	14	.785	.110	.312	.500	.078
CL-8-PBP-2	CL-8-PBPS-2	.500	8	18	1.130	.161	.438	.688	.088

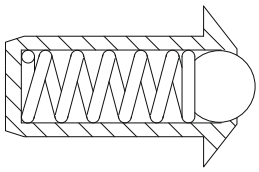

DELRIN® BALL, LIGHT FORCE

PART NO.		A	END FORCE (LBS)				D	E	
STEEL	STAINLESS	DIA	INITIAL	FINAL	B	C	DIA	DIA	F
CL-2-PBPN-1	CL-2-PBPSN-1	.125	.5	1	.252	.035	.093	.187	.032
CL-3-PBPN-1	CL-3-PBPSN-1	.188	1	2.5	.405	.058	.156	.250	.035
CL-4-PBPN-1	CL-4-PBPSN-1	.250	1.5	3.5	.481	.070	.188	.312	.044
CL-5-PBPN-1	CL-5-PBPSN-1	.312	2	5	.643	.090	.250	.375	.045
CL-6-PBPN-1	CL-6-PBPSN-1	.375	2.5	7	.785	.110	.312	.500	.078
CL-8-PBPN-1	CL-8-PBPSN-1	.500	4	9	1.130	.161	.438	.688	.088

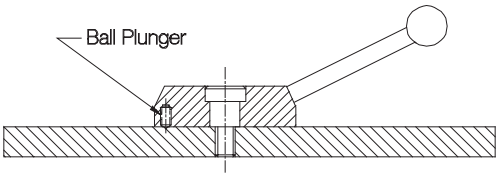

DELRIN® BALL, HEAVY FORCE

PART NO.		A	END FORCE (LBS)				D	E	
STEEL	STAINLESS	DIA	INITIAL	FINAL	B	C	DIA	DIA	F
CL-2-PBPN-2	CL-2-PBPSN-2	.125	.75	2.5	.252	.035	.093	.187	.032
CL-3-PBPN-2	CL-3-PBPSN-2	.188	2	5	.405	.058	.156	.250	.035
CL-4-PBPN-2	CL-4-PBPSN-2	.250	3	7	.481	.070	.188	.312	.044
CL-5-PBPN-2	CL-5-PBPSN-2	.312	4	10	.643	.090	.250	.375	.045
CL-6-PBPN-2	CL-6-PBPSN-2	.375	5	14	.785	.110	.312	.500	.078
CL-8-PBPN-2	CL-8-PBPSN-2	.500	8	18	1.130	.161	.438	.688	.088

MANUFACTURING CO.
4200 Carr Lane Ct., P.O. Box 191970
St. Louis, Missouri 63119-7970 USA
Phone: 314-647-6200, FAX: 314-647-5736
Web Site: www.carrlane.com

(Rev. 2-10)

BALL DETENTS

440C STAINLESS STEEL, HEAT TREATED

Press-in receptacle that provides a perfect mating hole for a Ball Plunger. Hole has a 90° point for smooth detent action and reliable retention. These hardened Ball Detents resist side loads to prevent wear to the parent material. Available in sizes to fit all Ball Plungers, from #4-48 to 5/8-11 (M4 to M12 in metric).

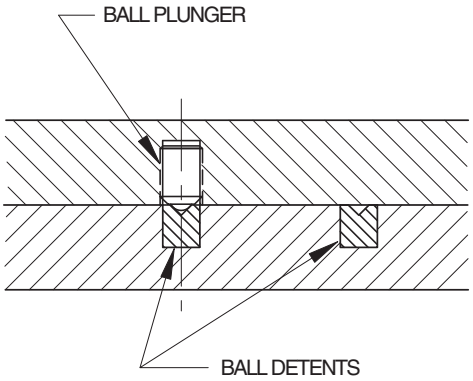

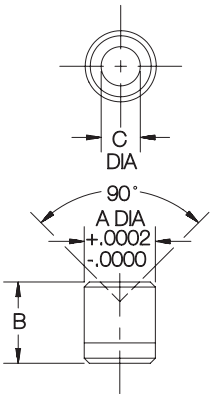

PART NO.	FOR BALL PLUNGER	A DIA	B	C DIA
CL-1-BD	#4-48, #5-40, M3	.1075	1/8	.056
CL-2-BD	#6-40	.1175	1/8	.061
CL-3-BD	#8-32, #8-36, #10-32, M4, M5	.1614	3/16	.082
CL-4-BD	1/4-20, M6	.2034	1/4	.111
CL-5-BD	5/16-18, M8	.2659	5/16	.139
CL-6-BD	3/8-16, M10	.3284	3/8	.164
CL-8-BD	1/2-13, M12	.4378	1/2	.241
CL-10-BD	5/8-11, M16	.5472	5/8	.330

PLUNGER WRENCHES

STEEL

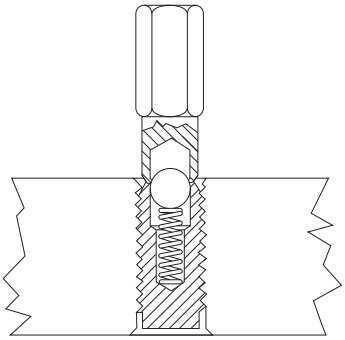

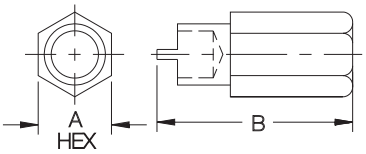

Handy tool to speed up installation of Ball Plungers or Spring Plungers. Much better than using a screwdriver on the ball/nose end, because the clearance hole in the center prevents over-compressing the plunger's internal spring. Available in sizes to fit all Ball Plungers and Spring Plungers, from #4-48 to 1"-8 (M4 to M12 in metric).

PART NO.	FITS THESE PLUNGER SIZES	A	B
CL-2-SPW	#4-48, #5-40, #6-32, #6-40	1/4	7/8
CL-4-SPW	#8-32, #8-36, M4	1/4	7/8
CL-6-SPW	#10-32, M5	1/4	7/8
CL-8-SPW	1/4-20, 1/4-28, M6	1/4	1
CL-10-SPW	5/16-18, M8	3/8	1
CL-12-SPW	3/8-16, M10	3/8	1
CL-14-SPW	1/2-13, M12	1/2	1
CL-16-SPW	5/8-11	5/8	1-1/8
CL-18-SPW	3/4-10	3/4	1-1/8
CL-20-SPW	1"-8	7/8	1-3/8

CarrLane®
MANUFACTURING CO.
4200 Carr Lane Ct., P.O. Box 191970
St. Louis, Missouri 63119-7970 USA
Phone: 314-647-6200, FAX: 314-647-5736
Web Site: www.carrlane.com

(Rev. 7-06)

HAND-RETRACTABLE PLUNGERS

STEEL: 12L14 BODY, 12L14 PLUNGER CARBURIZED-HARDENED (OR DELRIN®), 17-7PH SPRING.
ALL STEEL COMPONENTS ZINC PLATED CLEAR CHROMATE.
STAINLESS STEEL: 300 SERIES

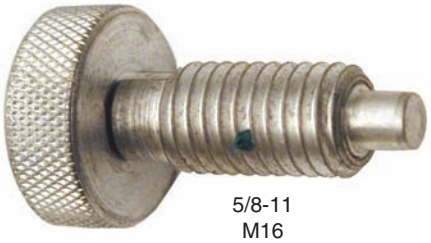

5/8-11
M16

ADDITIONAL SIZES AND DELRIN PLUNGERS NOW AVAILABLE!

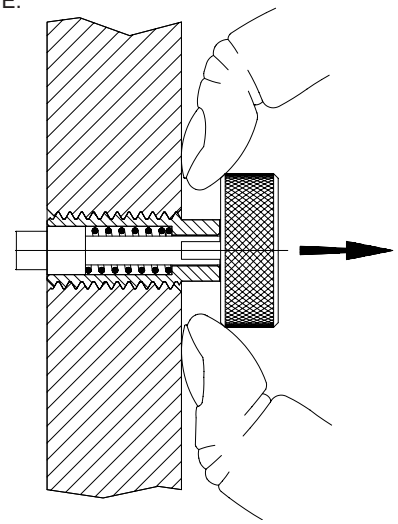

Pull knob to retract…

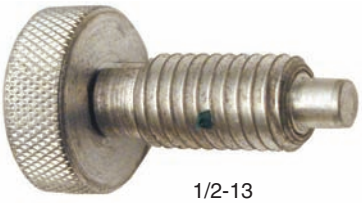

1/2-13
M12

Spring-loaded plunger that locks in retracted position. To lock, pull knurled knob back and turn 90°. Standard plunger has a slight taper on plunger tip for easy alignment. Also available with a radiused Delrin plunger (slightly larger diameter and lighter spring force). Available in steel or stainless steel. Note: Catalog photos are actual size.

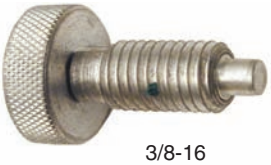

3/8-16
M10

Knurled Head (Locking Type)

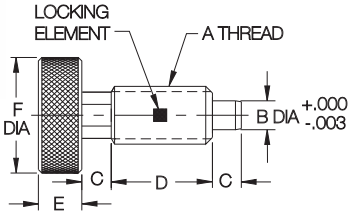

Standard Plunger

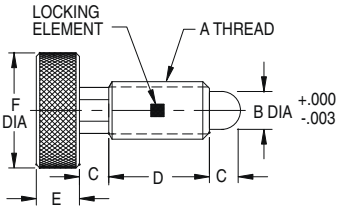

Radiused Delrin Plunger

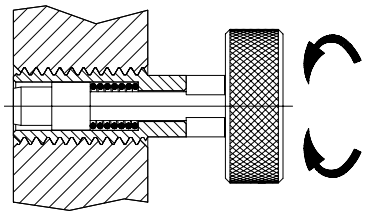

…then turn 90° in either direction to lock.

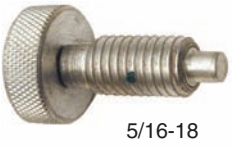

5/16-18
M8

1/4-20
M6

#10-32

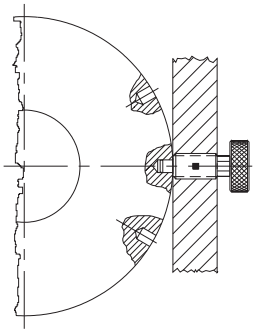

KNURLED HEAD — STEEL (USA)

PART NO. STANDARD PLUNGER	PART NO. RADIUSED DELRIN PLUNGER	A	STANDARD PLUNGER END FORCE (LBS) INITIAL	STANDARD PLUNGER END FORCE (LBS) FINAL	STANDARD PLUNGER B DIA NOMINAL	STANDARD PLUNGER B DIA ACTUAL	RADIUSED DELRIN PLUNGER END FORCE (LBS) INITIAL	RADIUSED DELRIN PLUNGER END FORCE (LBS) FINAL	RADIUSED DELRIN PLUNGER B DIA NOMINAL	RADIUSED DELRIN PLUNGER B DIA ACTUAL	C	D	E	F DIA
CL-3-HRP	—	#10-32	1	3.5	7/64	.105	—	—	—	—	3/32	13/32	3/16	3/8
CL-4-HRP	CL-4-HRPN	1/4-20	1	5	1/8	.125	.5	2.5	5/32	.145	1/8	1/2	1/4	1/2
CL-5-HRP	CL-5-HRPN	5/16-18	1.5	6	5/32	.156	.7	3	3/16	.180	3/16	5/8	9/32	5/8
CL-6-HRP	CL-6-HRPN	3/8-16	1.5	8	3/16	.187	.7	4	7/32	.217	7/32	3/4	5/16	3/4
CL-8-HRP	CL-8-HRPN	1/2-13	2.5	10	1/4	.250	1.2	5	5/16	.311	1/4	7/8	3/8	1
CL-10-HRP	CL-10-HRPN	5/8-11	5	10	5/16	.312	3	6	3/8	.374	5/16	1	3/8	1-1/8

KNURLED HEAD — STAINLESS (USA)

CL-3-HRP-S	—	#10-32	1	3.5	7/64	.105	—	—	—	—	3/32	13/32	3/16	3/8
CL-4-HRP-S	CL-4-HRPN-S	1/4-20	1	5	1/8	.125	.5	2.5	5/32	.145	1/8	1/2	1/4	1/2
CL-5-HRP-S	CL-5-HRPN-S	5/16-18	1.5	6	5/32	.156	.7	3	3/16	.180	3/16	5/8	9/32	5/8
CL-6-HRP-S	CL-6-HRPN-S	3/8-16	1.5	8	3/16	.187	.7	4	7/32	.217	7/32	3/4	5/16	3/4
CL-8-HRP-S	CL-8-HRPN-S	1/2-13	2.5	10	1/4	.250	1.2	5	5/16	.311	1/4	7/8	3/8	1
CL-10-HRP-S	CL-10-HRPN-S	5/8-11	5	10	5/16	.312	3	6	3/8	.374	5/16	1	3/8	1-1/8

KNURLED HEAD — STEEL (METRIC)

CLM-6-HRP	—	M6	1	5	3mm	.118	—	—	—	—	1/8	1/2	1/4	1/2
CLM-8-HRP	—	M8	1.5	6	4mm	.157	—	—	—	—	3/16	5/8	9/32	5/8
CLM-10-HRP	—	M10	1.5	8	5mm	.197	—	—	—	—	7/32	3/4	5/16	3/4
CLM-12-HRP	—	M12	2.5	10	6mm	.236	—	—	—	—	1/4	7/8	3/8	1
CLM-16-HRP	—	M16	5	10	8mm	.315	—	—	—	—	5/16	1	3/8	1-1/8

KNURLED HEAD — STAINLESS (METRIC)

CLM-6-HRP-S	—	M6	1	5	3mm	.118	—	—	—	—	1/8	1/2	1/4	1/2
CLM-8-HRP-S	—	M8	1.5	6	4mm	.157	—	—	—	—	3/16	5/8	9/32	5/8
CLM-10-HRP-S	—	M10	1.5	8	5mm	.197	—	—	—	—	7/32	3/4	5/16	3/4
CLM-12-HRP-S	—	M12	2.5	10	6mm	.236	—	—	—	—	1/4	7/8	3/8	1
CLM-16-HRP-S	—	M16	5	10	8mm	.315	—	—	—	—	5/16	1	3/8	1-1/8

Carr Lane®
MANUFACTURING CO.
4200 Carr Lane Ct., P.O. Box 191970
St. Louis, Missouri 63119-7970 USA
Phone: 314-647-6200, FAX: 314-647-5736
Web Site: www.carrlane.com

(Rev. 3-07)

HAND-RETRACTABLE PLUNGERS

STEEL: 12L14 BODY, 12L14 PLUNGER CARBURIZED-HARDENED, 17-7PH SPRING.
ALL STEEL COMPONENTS ZINC PLATED CLEAR CHROMATE.
STAINLESS STEEL: 300 SERIES

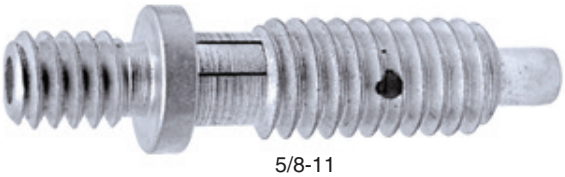

5/8-11

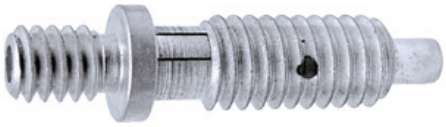

1/2-13
M12

3/8-16
M10

5/16-18
M8

1/4-20
M6

#10-32

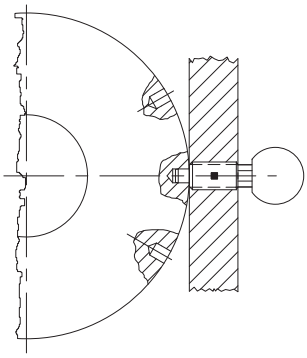

Threaded Stud for Knob Handle (Locking Type)

Spring-loaded plunger that locks in retracted position. To lock, pull knob back and turn 90°. Slight taper on plunger tip for easy alignment. Available in steel or stainless steel. The threaded-stud version shown here accepts virtually any type of knob handle (order separately — available in steel, stainless steel, and several different plastics, see pages 106-113). Knob handles can be permanently secured with thread-locking adhesive if desired. Note: Catalog photos are actual size.

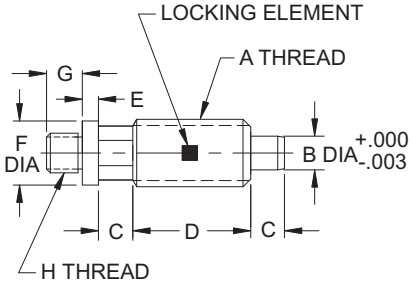

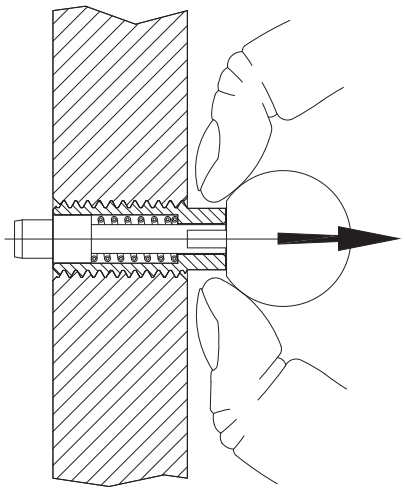

Pull knob to retract…

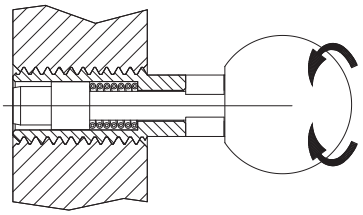

…then turn 90° in either direction to lock.

THREADED STUD FOR KNOB HANDLE — STEEL (USA)

PART NO.	A	END FORCE (LBS) INITIAL	END FORCE (LBS) FINAL	B DIA NOMINAL	B DIA ACTUAL	C	D	E	F DIA	G	H
CL-3-HRPT	#10-32	1	3	—	.105	3/32	13/32	5/64	5/16	15/64	#10-32
CL-4-HRPT	1/4-20	1	5	1/8	.125	1/8	1/2	3/32	5/16	15/64	#10-32
CL-5-HRPT	5/16-18	1.5	6	5/32	.156	3/16	5/8	3/32	5/16	11/32	1/4-20
CL-6-HRPT	3/8-16	1.5	8	3/16	.187	7/32	3/4	1/8	3/8	13/32	5/16-18
CL-8-HRPT	1/2-13	2.5	10	1/4	.250	1/4	7/8	1/8	1/2	7/16	3/8-16
CL-10-HRPT	5/8-11	5	10	5/16	.312	5/16	1	5/32	5/8	1/2	1/2-13

THREADED STUD FOR KNOB HANDLE — STAINLESS (USA)

CL-3-HRPT-S	#10-32	1	3	—	.105	3/32	13/32	5/64	5/16	15/64	#10-32
CL-4-HRPT-S	1/4-20	1	5	1/8	.125	1/8	1/2	3/32	5/16	15/64	#10-32
CL-5-HRPT-S	5/16-18	1.5	6	5/32	.156	3/16	5/8	3/32	5/16	11/32	1/4-20
CL-6-HRPT-S	3/8-16	1.5	8	3/16	.187	7/32	3/4	1/8	3/8	13/32	5/16-18
CL-8-HRPT-S	1/2-13	2.5	10	1/4	.250	1/4	7/8	1/8	1/2	7/16	3/8-16
CL-10-HRPT-S	5/8-11	5	10	5/16	.312	5/16	1	5/32	5/8	1/2	1/2-13

THREADED STUD FOR KNOB HANDLE — STEEL (METRIC)

CLM-6-HRPT	M6	1	5	3mm	.1181	1/8	1/2	3/32	5/16	15/64	#10-32
CLM-8-HRPT	M8	1.5	6	4mm	.1575	3/16	5/8	3/32	5/16	11/32	1/4-20
CLM-10-HRPT	M10	1.5	8	5mm	.1969	7/32	3/4	1/8	3/8	13/32	5/16-18
CLM-12-HRPT	M12	2.5	10	6mm	.2362	1/4	7/8	1/8	1/2	7/16	3/8-16

Carr Lane®
MANUFACTURING CO.
4200 Carr Lane Ct., P.O. Box 191970
St. Louis, Missouri 63119-7970 USA
Phone: 314-647-6200, FAX: 314-647-5736
Web Site: www.carrlane.com

(Rev. 8-98)

HAND-RETRACTABLE PLUNGERS

STEEL: 12L14 BODY, 12L14 PLUNGER CARBURIZED-HARDENED, 17-7PH SPRING
ALL STEEL COMPONENTS ZINC PLATED CLEAR CHROMATE
STAINLESS STEEL: 300 SERIES

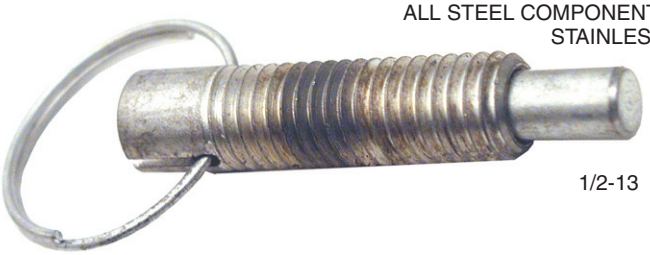

1/2-13

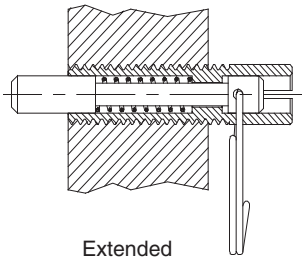

Extended

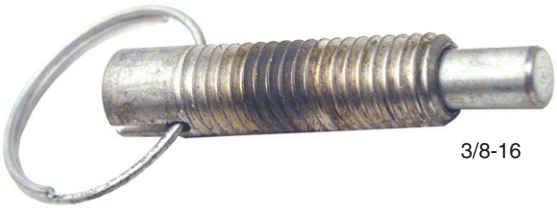

3/8-16

Spring-loaded plunger that can be withdrawn completely into the body and locked in retracted position. Comfortable pull ring allows quick actuation, yet stays out of the way when not in use. Note: Catalog photos are actual size.

Pull Ring (Locking Type)

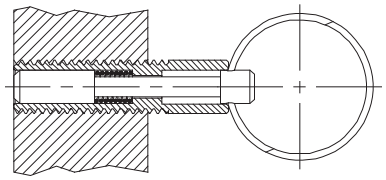

Retracted

1/4-20

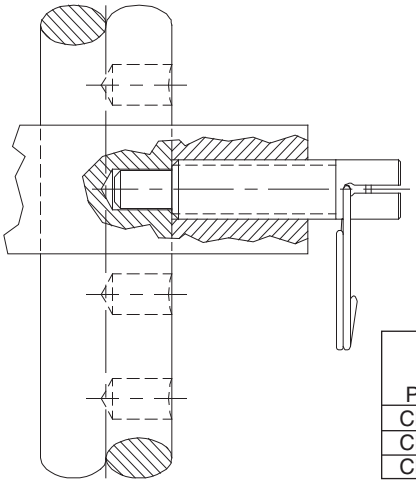

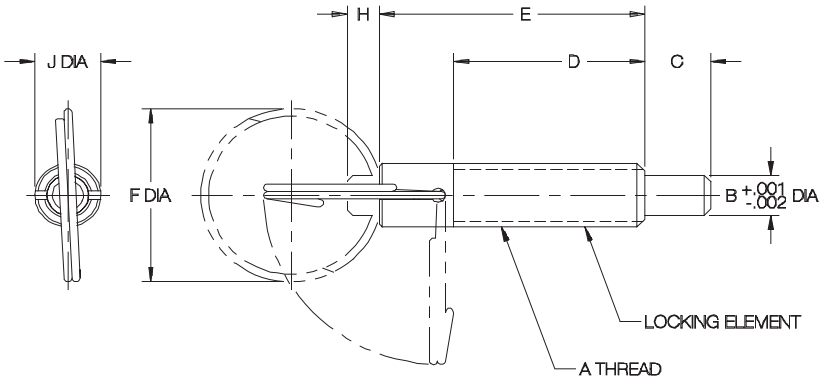

PULL RING, LOCKING TYPE — STEEL (USA)

PART NO.	A	END FORCE (LBS) INITIAL	END FORCE (LBS) FINAL	B DIA	C	D	E	F DIA	H	J DIA
CL-4-PHRP	1/4-20	1	2.5	.156	1/4	13/16	1-1/8	1	7/64	1/4
CL-6-PHRP	3/8-16	2	4	.250	3/8	1-1/4	1-11/16	1-1/4	3/16	3/8
CL-8-PHRP	1/2-13	2.5	5	.312	1/2	1-7/16	2	1-3/8	1/4	1/2

PULL RING, LOCKING TYPE — STAINLESS STEEL (USA)

PART NO.	A	END FORCE (LBS) INITIAL	END FORCE (LBS) FINAL	B DIA	C	D	E	F DIA	H	J DIA
CL-4-PHRP-S	1/4-20	1	2.5	.156	1/4	13/16	1-1/8	1	7/64	1/4
CL-6-PHRP-S	3/8-16	2	4	.250	3/8	1-1/4	1-11/16	1-1/4	3/16	3/8
CL-8-PHRP-S	1/2-13	2.5	5	.312	1/2	1-7/16	2	1-3/8	1/4	1/2

Carr Lane®
MANUFACTURING CO.
4200 Carr Lane Ct., P.O. Box 191970
St. Louis, Missouri 63119-7970 USA
Phone: 314-647-6200, FAX: 314-647-5736
Web Site: www.carrlane.com

(Rev. 7-04)

HAND-RETRACTABLE PLUNGERS

STEEL: 12L14 BODY, 12L14 PLUNGER CARBURIZED-HARDENED, 17-7PH SPRING
ALL STEEL COMPONENTS ZINC PLATED CLEAR CHROMATE
STAINLESS STEEL: 300 SERIES

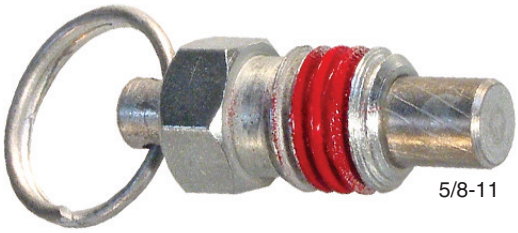

5/8-11

1/2-13

3/8-16

1/4-20

Extremely compact spring-loaded plunger that extends unless manually held in retracted position. Comfortable pull ring allows quick actuation, yet stays out of the way when not in use. Note: Catalog photos are actual size.

Pull Ring
(Non-Locking Type)

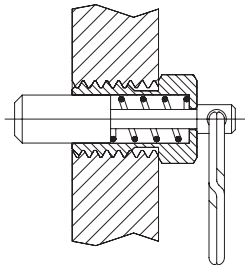

Extended

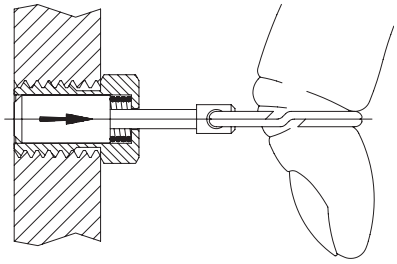

Retracted

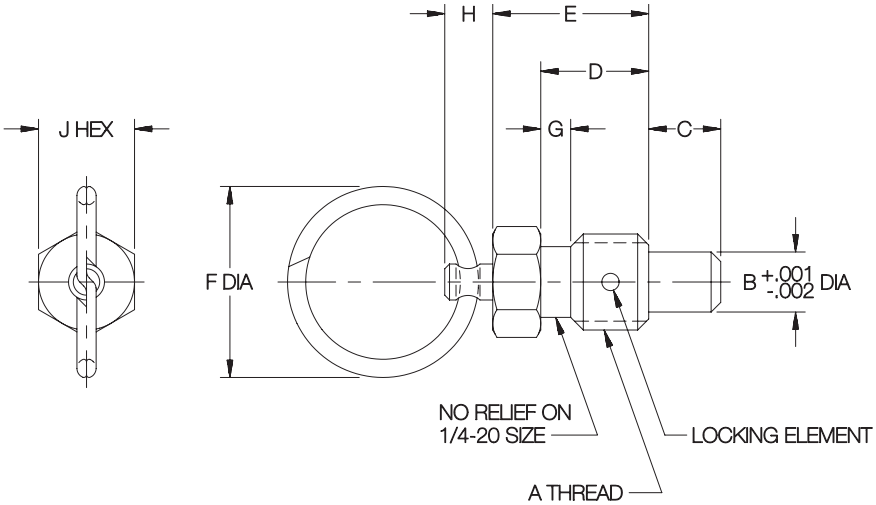

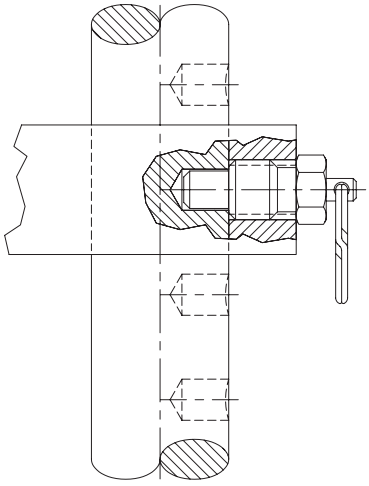

PULL RING, NON-LOCKING TYPE — STEEL (USA)

PART NO.	A	END FORCE (LBS) INITIAL	END FORCE (LBS) FINAL	B DIA	C	D	E	F DIA	G	H	J
CL-4-RHRP	1/4-20	.5	2	.156	3/16	9/32	7/16	3/4	1/32	5/32	1/4
CL-6-RHRP	3/8-16	.75	3	.250	9/32	7/16	5/8		1/8	3/16	3/8
CL-8-RHRP	1/2-13	1	4	.312	3/8	9/16	13/16	1	5/32	1/4	1/2
CL-10-RHRP	5/8-11	1.25	5	.375	7/16	11/16	1			5/16	5/8

PULL RING, NON-LOCKING TYPE — STAINLESS STEEL (USA)

PART NO.	A	END FORCE (LBS) INITIAL	END FORCE (LBS) FINAL	B DIA	C	D	E	F DIA	G	H	J
CL-4-RHRP-S	1/4-20	.5	2	.156	3/16	9/32	7/16	3/4	1/32	5/32	1/4
CL-6-RHRP-S	3/8-16	.75	3	.250	9/32	7/16	5/8		1/8	3/16	3/8
CL-8-RHRP-S	1/2-13	1	4	.312	3/8	9/16	13/16	1	5/32	1/4	1/2
CL-10-RHRP-S	5/8-11	1.25	5	.375	7/16	11/16	1			5/16	5/8

CarrLane®
MANUFACTURING CO.
4200 Carr Lane Ct., P.O. Box 191970
St. Louis, Missouri 63119-7970 USA
Phone: 314-647-6200, FAX: 314-647-5736
Web Site: www.carrlane.com

(Rev. 9-07)

HAND-RETRACTABLE PLUNGERS

STEEL: 12L14 BODY, 12L14 PLUNGER CARBURIZED-HARDENED, 17-7PH SPRING
ALL STEEL COMPONENTS ZINC PLATED CLEAR CHROMATE
STAINLESS STEEL: 300 SERIES

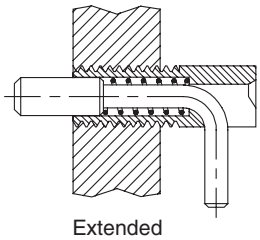

Extended Position

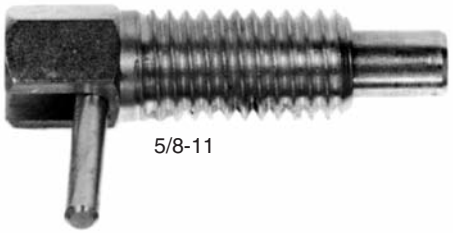

5/8-11

Spring-loaded plunger that locks in retracted position. Convenient L handle for quick retraction and locking. Note: Catalog photos are actual size.

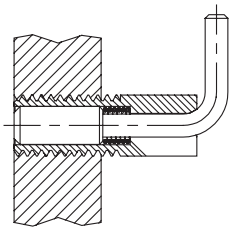

Retracted Position

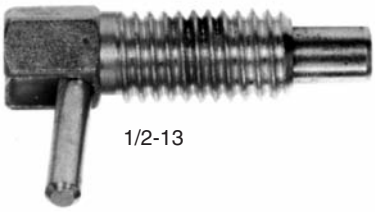

1/2-13

L Handle
Short Stroke
(Locking Type)

3/8-16

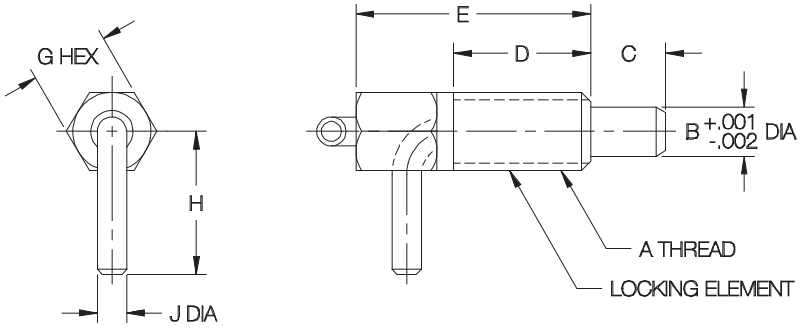

1/4-20

L HANDLE, SHORT STROKE — STEEL (USA)

PART NO.	A	END FORCE (LBS) INITIAL	END FORCE (LBS) FINAL	B DIA	C	D	E	G	H	J DIA
CL-40-LHRP	1/4-20	.12	.5	.156	3/16	7/16	3/4	1/4	9/16	3/32
CL-60-LHRP	3/8-16	.25	1.25	.250	5/16	5/8	1-1/8	3/8	3/4	9/64
CL-80-LHRP	1/2-13	.5	2	.312	13/32	7/8	1-1/2	1/2	1	3/16
CL-100-LHRP	5/8-11	.75	2..5	.375	1/2	1-1/8	1-7/8	5/8	1-3/16	

L HANDLE, SHORT STROKE — STAINLESS STEEL (USA)

PART NO.	A	END FORCE (LBS) INITIAL	END FORCE (LBS) FINAL	B DIA	C	D	E	G	H	J DIA
CL-40-LHRP-S	1/4-20	.12	.5	.156	3/16	7/16	3/4	1/4	9/16	3/32
CL-60-LHRP-S	3/8-16	.25	1.25	.250	5/16	5/8	1-1/8	3/8	3/4	9/64
CL-80-LHRP-S	1/2-13	.5	2	.312	13/32	7/8	1-1/2	1/2	1	3/16
CL-100-LHRP-S	5/8-11	.75	2..5	.375	1/2	1-1/8	1-7/8	5/8	1-3/16	

Carr Lane®
MANUFACTURING CO.
4200 Carr Lane Ct., P.O. Box 191970
St. Louis, Missouri 63119-7970 USA
Phone: 314-647-6200, FAX: 314-647-5736
Web Site: www.carrlane.com

(Rev. 9-07)

HAND-RETRACTABLE PLUNGERS

STEEL: 12L14 BODY, 12L14 PLUNGER CARBURIZED-HARDENED, 17-7PH SPRING
ALL STEEL COMPONENTS ZINC PLATED CLEAR CHROMATE
STAINLESS STEEL: 300 SERIES

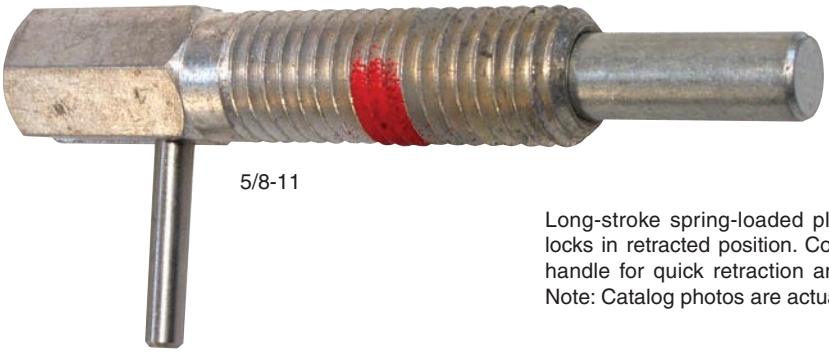

5/8-11

Long-stroke spring-loaded plunger that locks in retracted position. Convenient L handle for quick retraction and locking. Note: Catalog photos are actual size.

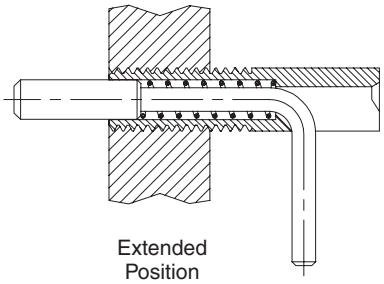

Extended Position

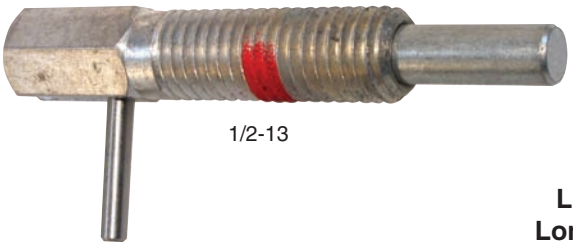

1/2-13

L Handle
Long Stroke
(Locking Type)

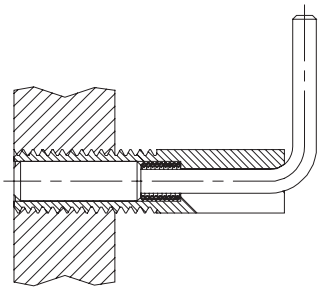

Retracted Position

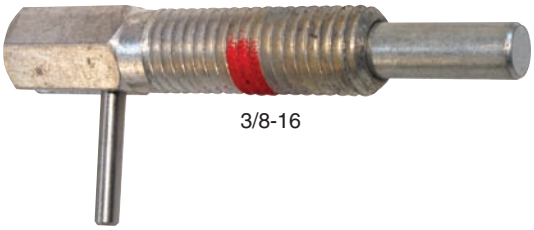

3/8-16

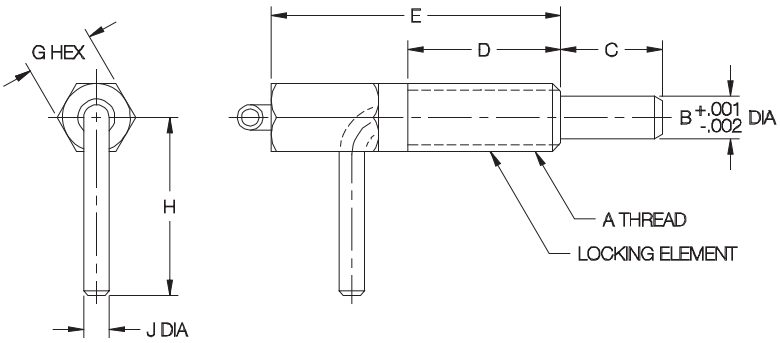

1/4-20

L HANDLE, LONG STROKE — STEEL (USA)

PART NO.	A	END FORCE (LBS) INITIAL	END FORCE (LBS) FINAL	B DIA	C	D	E	G	H	J DIA
CL-4-LHRP	1/4-20	.5	2.5	.156	3/8	5/8	1-1/4	1/4	5/8	3/32
CL-6-LHRP	3/8-16	.75	3.75	.250	9/16	1-1/16	2	3/8	15/16	9/64
CL-8-LHRP	1/2-13	1	5	.312	3/4	1-1/8	2-1/8	1/2	1-1/4	3/16
CL-10-LHRP	5/8-11			.375	1	1-3/4	3	5/8	1-5/16	

L HANDLE, LONG STROKE — STAINLESS (USA)

CL-4-LHRP-S	1/4-20	.5	2.5	.156	3/8	5/8	1-1/4	1/4	5/8	3/32
CL-6-LHRP-S	3/8-16	.75	3.75	.250	9/16	1-1/16	2	3/8	15/16	9/64
CL-8-LHRP-S	1/2-13	1	5	.312	3/4	1-1/8	2-1/8	1/2	1-1/4	3/16
CL-10-LHRP-S	5/8-11			.375	1	1-3/4	3	5/8	1-5/16	

CarrLane®
MANUFACTURING CO.
4200 Carr Lane Ct., P.O. Box 191970
St. Louis, Missouri 63119-7970 USA
Phone: 314-647-6200, FAX: 314-647-5736
Web Site: www.carrlane.com

(Rev. 4-07)

HAND-RETRACTABLE PLUNGERS

KNOB: MATTE BLACK FIBER-REINFORCED NYLON THERMOPLASTIC
PLUNGER: STEEL, HEAT TREATED.
BODY: STEEL, BLACK OXIDE FINISH

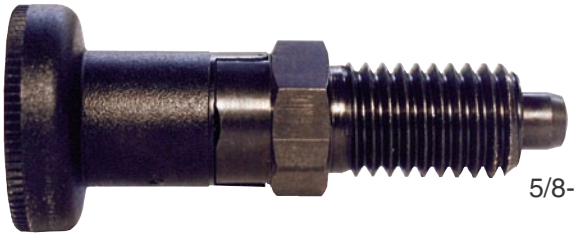

5/8-11

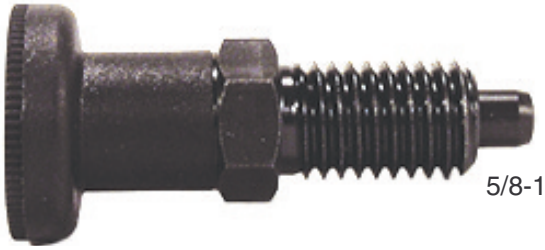

5/8-11

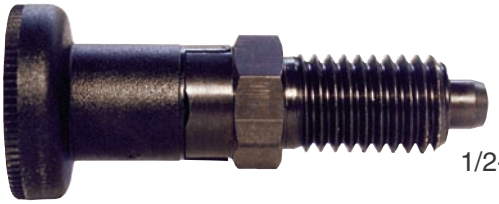

1/2-13

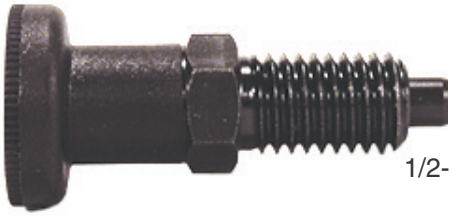

1/2-13

3/8-24

Knob Handle (Locking Type)

3/8-24

Knob Handle (Non-Locking Type)

Precision indexing plunger with a attractive knob handle for convenient retraction. Threaded-body version provides adjustment and can be secured with an optional Jam Nut. High strength and durability in an extremely compact assembly (catalog photos are actual size). Hardened and ground plunger tip has a slight taper for easy alignment. Available in two types, locking and non-locking.

Locking type has a spring-loaded plunger that locks in retracted position. To lock, pull knurled knob back and turn 90°. Body is notched at 90° to keep the knob in its retracted position.

Non-locking type has a spring-loaded plunger that stays extended by spring force except when manually held in retracted position.

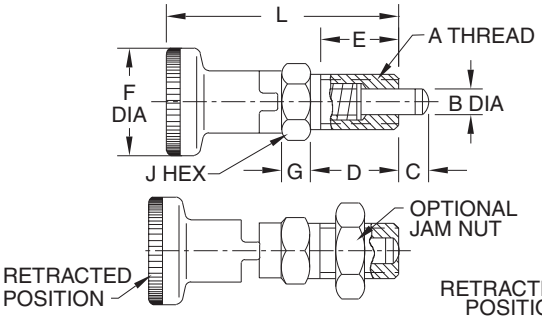

Locking

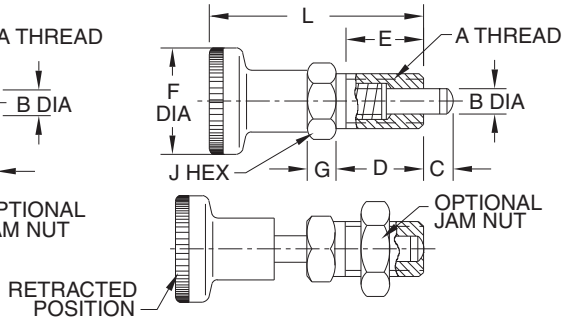

Non-locking

LOCKING TYPE (USA)

PART NO.	A	B DIA NOMINAL	B DIA ACTUAL	C	D	E	F DIA	G	J	L	END FORCE (LBS) INITIAL	END FORCE (LBS) FINAL	JAM NUT (OPTIONAL)
CL-6-HRPK-L	3/8-24	5mm	.1961/.1953	.20	.67	.59	.83	.20	12mm	1.73	1.6	3.6	CL-6-FJN
CL-8-HRPK-L	1/2-13	6mm	.2354/.2346	.24	.79	.67	.98	.24	14mm	2.09	1.5	3.4	CL-8-JN
CL-10-HRPK-L	5/8-11	8mm	.3142/.3134	.28	1.02	.91	1.22	.31	19mm	2.62	2.7	7.0	CL-10-JN

NON-LOCKING TYPE (USA)

CL-6-HRPK-N	3/8-24	5mm	.1961/.1953	.20	.67	.59	.83	.20	12mm	1.73	1.6	3.6	CL-6-FJN
CL-8-HRPK-N	1/2-13	6mm	.2354/.2346	.24	.79	.67	.98	.24	14mm	2.09	1.5	3.4	CL-8-JN
CL-10-HRPK-N	5/8-11	8mm	.3142/.3134	.28	1.02	.91	1.22	.31	19mm	2.62	2.7	7.0	CL-10-JN

Carr Lane®
MANUFACTURING CO.
4200 Carr Lane Ct., P.O. Box 191970
St. Louis, Missouri 63119-7970 USA
Phone: 314-647-6200, FAX: 314-647-5736
Web Site: www.carrlane.com

(Rev. 3-07)

HAND-RETRACTABLE PLUNGERS

KNOB: MATTE BLACK FIBER-REINFORCED NYLON THERMOPLASTIC
PLUNGER: STEEL, HEAT TREATED
BODY PLATE: STEEL, ZINC PLATED CLEAR CHROMATE

Knob Handle with Mounting Plate (Locking Type)

Knob Handle with Mounting Plate (Non-Locking Type)

Precision indexing plunger with a attractive knob handle for convenient retraction. Mounting-plate version installs in a fixed position with two flat-head screws, and is available with either a short or long plunger extension. High strength and durability in an extremely compact assembly (catalog photos are actual size). Hardened and ground plunger tip has a slight taper for easy alignment. Available in two types, locking and non-locking, each with a choice of short or long plunger extension.

Locking type has a spring-loaded plunger that locks in retracted position. To lock, pull knurled knob back and turn 90°. The body is notched at 90° to keep the knob in its retracted position.

Non-locking type has a spring-loaded plunger that stays extended by spring force except when manually held in retracted position.

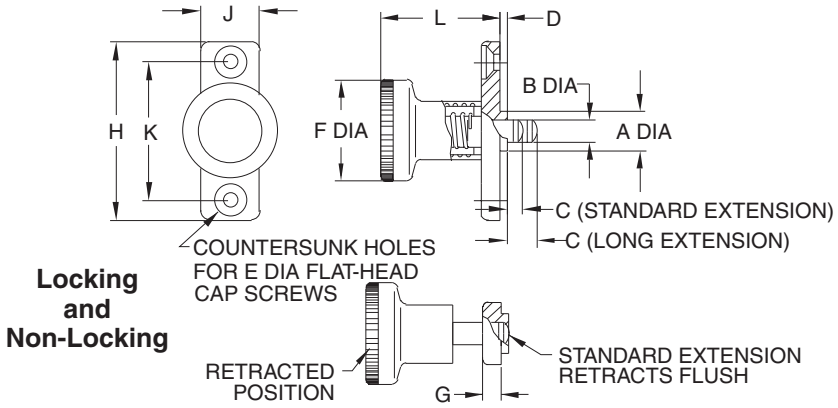

LOCKING TYPE

PART NO. STANDARD EXTENSION	PART NO. LONG EXTENSION	A DIA		B DIA		C		D	E DIA	F DIA	G	H	J	K	L	END FORCE (LBS)	
		NOMINAL	ACTUAL	NOMINAL	ACTUAL	STANDARD EXTENSION	LONG EXTENSION									INITIAL	FINAL
CL-8-HRPM-L	CL-8-HRPM-LE	10mm	.393/.390	6mm	.2354/.2346	.24	.55 (.24 stroke)	.10	#8 or M4	.98	.18	1.57	.71	1.181	1.12	1.9	4.9
CL-10-HRPM-L	CL-10-HRPM-LE	12mm	.472/.468	8mm	.3142/.3134	.31	.71 (.31 stroke)		#10 or M5	1.22	.22	1.81	.79	1.339	1.32	3.5	6.3

NON-LOCKING TYPE

CL-8-HRPM-N	CL-8-HRPM-NE	10mm	.393/.390	6mm	.2354/.2346	.24	.55 (.24 stroke)	.10	#8 or M4	.98	.18	1.57	.71	1.181	1.12	1.9	4.9
CL-10-HRPM-N	CL-10-HRPM-NE	12mm	.472/.468	8mm	.3142/.3134	.31	.71 (.31 stroke)		#10 or M5	1.22	.22	1.81	.79	1.339	1.32	3.5	6.3

Carr Lane®
MANUFACTURING CO.
4200 Carr Lane Ct., P.O. Box 191970
St. Louis, Missouri 63119-7970 USA
Phone: 314-647-6200, FAX: 314-647-5736
Web Site: www.carrlane.com

(Rev. 7-06)

INDEX PLUNGERS

PLUNGER, BODY, CAM, AND BUSHING: 1144 STEEL, HEAT TREATED. CENTER SHAFT: 11L44 STEEL. SPRING: MUSIC WIRE.
BALL KNOB: BLACK PHENOLIC PLASTIC WITH MOLDED-IN BRASS INSERT

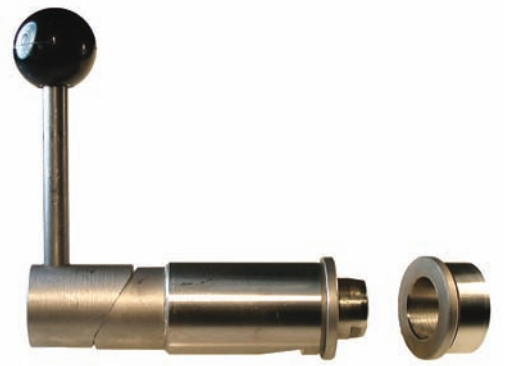

Tapered Index Plungers
Rotary Cam
Standard Mount

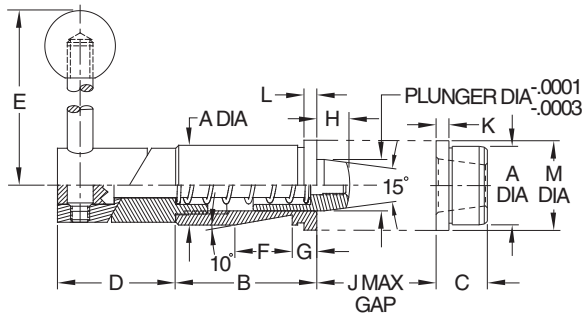

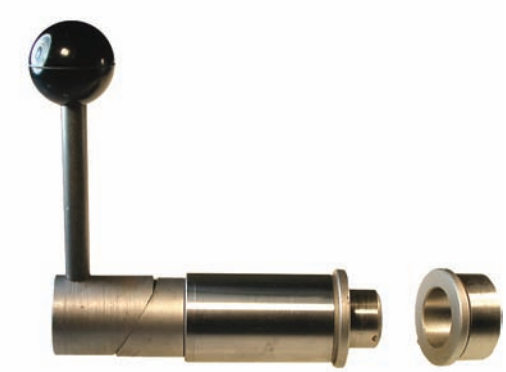

Straight Index Plungers
Rotary Cam
Standard Mount

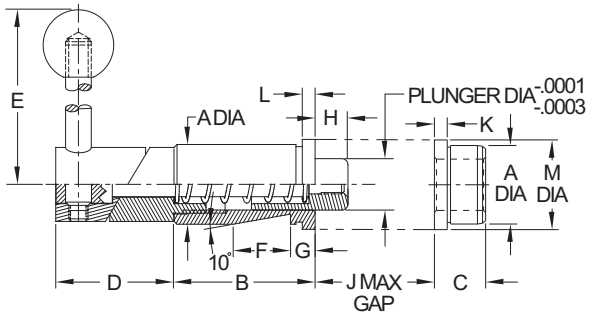

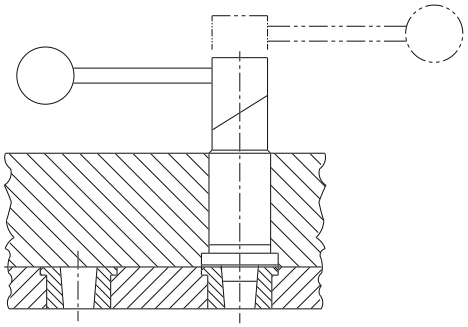

Index plungers are precision, heavy-duty assemblies with a retractable spring-loaded plunger and a matching locating bushing. Tapered Index Plungers feature a 15° taper on the plunger tip with a mating taper on the bushing. The taper makes alignment easier and also eliminates any binding during retraction. Straight Index Plungers have an entirely cylindrical plunger with a slight radius at the tip, used together with a straight bushing. A straight plunger provides slightly greater positional accuracy. Order plunger and bushing separately.

The rotary-cam version completely retracts when the handle is rotated 180°. Cam surfaces are hardened steel. The standard-mount configuration has a precision ground body with a whistle notch for orientation with a setscrew (also available with a slightly oversize unground body to allow custom grinding to size). Index plungers are manufactured with precision working tolerances and are designed for very light interference-fit installations to avoid binding of the mechanism. Setscrews with nylon tip inserts are recommended. Setscrews should firmly contact the whistle notch, but not exert significant force.

TAPERED INDEX PLUNGERS
ROTARY CAM — STANDARD MOUNT (USA)

PART NO. INDEX PLUNGER	PART NO. BUSHING	PLUNGER DIA	A DIA NOMINAL	A DIA GROUND	A DIA UNGROUND	B	C	D	E	F	G	H	J	K	L	M DIA	N DIA	P DIA
CL-22018-TIP	CL-22032-TIPB	1/2	3/4	.7518/.7515	—	1-3/8	1/2	1-1/8	3	7/16	5/16	5/16	3/32	1/8	1/8	7/8	—	—
CL-22016-TIP	CL-22030-TIPB			—	.766/.765													
CL-22118-TIP	CL-22132-TIPB	3/4	1-1/8	1.1268/1.1265	—	2	5/8	1-5/8	3-1/2	9/16	3/8	13/32	1/8	1/8	1/8	1-1/4	—	—
CL-22116-TIP	CL-22130-TIPB			—	1.141/1.140													
CL-22218-TIP	CL-22232-TIPB	1	1-1/2	1.5021/1.5018	—	2-1/4	3/4	2-1/8	4-1/2	11/16	7/16	7/16	1/8	1/8	1/8	1-5/8	—	—
CL-22216-TIP	CL-22230-TIPB			—	1.516/1.515													

STRAIGHT INDEX PLUNGERS
ROTARY CAM — STANDARD MOUNT (USA)

CL-22006-SIP	CL-22028-SIPB	1/2	3/4	.7518/.7515	—	1-3/8	1/2	1-1/8	3	7/16	5/16	5/16	3/32	1/8	1/8	7/8	—	—
CL-22004-SIP	CL-22026-SIPB			—	.766/.765													
CL-22106-SIP	CL-22128-SIPB	3/4	1-1/8	1.1268/1.1265	—	2	5/8	1-1/2	3-1/2	9/16	3/8	13/32	1/8	1/8	1/8	1-1/4	—	—
CL-22104-SIP	CL-22126-SIPB			—	1.141/1.140													
CL-22206-SIP	CL-22228-SIPB	1	1-1/2	1.5021/1.5018	—	2-1/4	3/4	1-7/8	4-1/2	11/16	7/16	7/16	1/8	1/8	1/8	1-5/8	—	—
CL-22204-SIP	CL-22226-SIPB			—	1.516/1.515													

Carr Lane MANUFACTURING CO.
4200 Carr Lane Ct., P.O. Box 191970
St. Louis, Missouri 63119-7970 USA
Phone: 314-647-6200, FAX: 314-647-5736
Web Site: www.carrlane.com

(Rev. 9-06)

INDEX PLUNGERS

PLUNGER, BODY, RETAINER, AND CAM: 1144 STEEL, HEAT TREATED. CENTER SHAFT: 11L44 STEEL.SPRING: MUSIC WIRE. BALL KNOB: BLACK PHENOLIC PLASTIC WITH MOLDED-IN BRASS INSERT

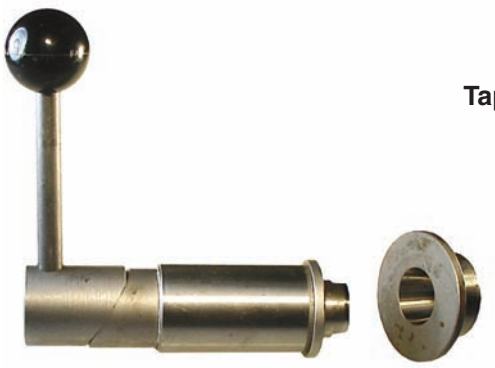

Tapered Index Plungers
Rotary Cam
Flange Mount

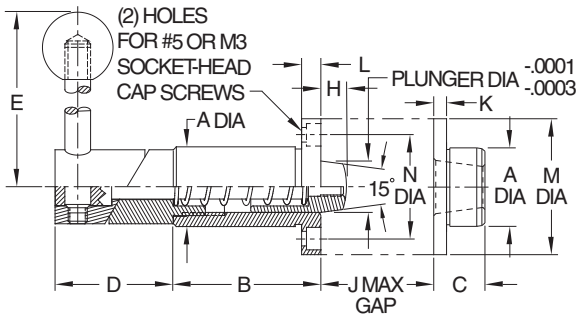

Straight Index Plungers
Rotary Cam
Flange Mount

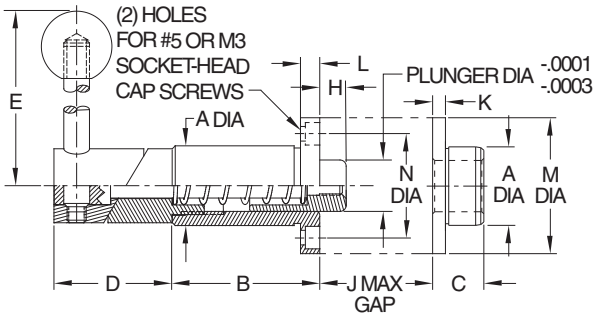

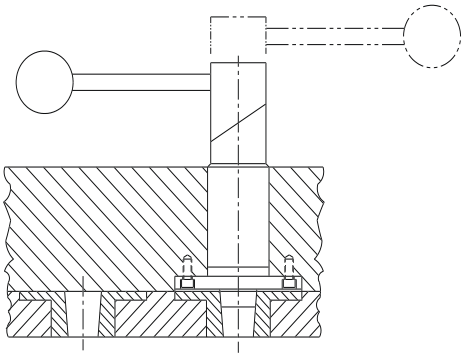

Index plungers are precision, heavy-duty assemblies with a retractable spring-loaded plunger and a matching locating bushing. Tapered Index Plungers feature a 15° taper on the plunger tip with a mating taper on the bushing. The taper makes alignment easier and also eliminates any binding during retraction. Straight Index Plungers have an entirely cylindrical plunger with a slight radius at the tip, used together with a straight bushing. A straight plunger provides slightly greater positional accuracy. Order plunger and bushing separately.

The rotary-cam version completely retracts when the handle is rotated 180°. Cam surfaces are hardened steel. The flange-mount configuration shown here has a precision ground body with a flange used for orientation by fastening with two socket-head cap screws (also available with a slightly oversize unground body to allow custom grinding to size). Flange mounting is designed for installations where a cross hole for a set screw is not practical. Index plungers are manufactured with precision working tolerances and are designed for a very light interference-fit installations to avoid binding of the mechanism.

TAPERED INDEX PLUNGERS
ROTARY CAM — FLANGE MOUNT (USA)

PART NO. INDEX PLUNGER	PART NO. BUSHING	PLUNGER DIA	A DIA			B	C	D	E	F	G	H	J	K	L	M DIA	N DIA	P DIA
			NOMINAL	GROUND	UNGROUND													
CL-22019-TIP	CL-22033-TIPB	1/2	3/4	.7518/.7515	—	1-3/8	1/2	1-1/8	3	—	—	5/16	3/32	1/8	3/16	1-5/16	1	—
CL-22017-TIP	CL-22031-TIPB			—	.766/.765													
CL-22119-TIP	CL-22133-TIPB	3/4	1-1/8	1.1268/1.1265	—	2	5/8	1-1/2	3-1/2	—	—	13/32	1/8	1/8	3/16	1-11/16	1-3/8	—
CL-22117-TIP	CL-22131-TIPB			—	1.141/1.140													

STRAIGHT INDEX PLUNGERS
ROTARY CAM — FLANGE MOUNT (USA)

CL-22007-SIP	CL-22029-SIPB	1/2	3/4	.7518/.7515	—	1-3/8	1/2	1-1/8	3	—	—	5/16	3/32	1/8	3/16	1-5/16	1	—
CL-22005-SIP	CL-22027-SIPB			—	.766/.765													
CL-22107-SIP	CL-22129-SIPB	3/4	1-1/8	1.1268/1.1265	—	2	5/8	1-1/2	3-1/2	—	—	13/32	1/8	1/8	3/16	1-11/16	1-3/8	—
CL-22105-SIP	CL-22127-SIPB			—	1.141/1.140													

Carr Lane®
MANUFACTURING CO.
4200 Carr Lane Ct., P.O. Box 191970
St. Louis, Missouri 63119-7970 USA
Phone: 314-647-6200, FAX: 314-647-5736
Web Site: www.carrlane.com

(Rev. 7-06)

INDEX PLUNGERS

PLUNGER, BODY, CAM, AND BUSHING: 1144 STEEL, HEAT TREATED. CENTER SHAFT: 11L44 STEEL. SPRING: MUSIC WIRE.

Tapered Index Plunger Blank Machinable End

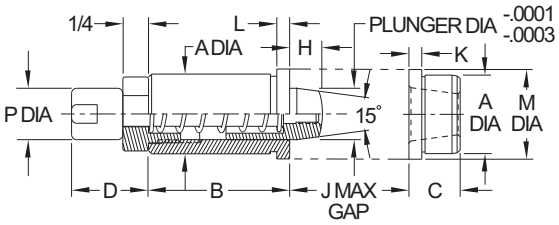

Straight Index Plunger Blank Machinable End

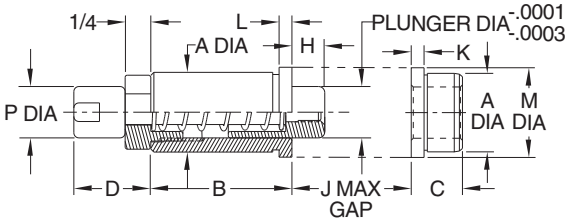

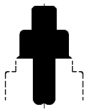
Thread

Tap

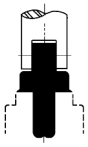
Link

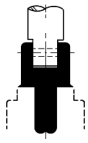
Link

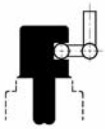
Bell Crank

Index plungers are precision, heavy-duty assemblies with a retractable spring-loaded plunger and a matching locating bushing. Tapered Index Plungers feature a 15° taper on the plunger tip with a mating taper in the bushing. The taper makes alignment easier and also eliminates any binding during retraction. Straight Index Plungers have an entirely cylindrical plunger with a slight radius at the tip, used together with a straight bushing. A straight plunger provides slightly greater positional accuracy. Order plunger and bushing separately.

The version shown on this page has a blank machinable end for easy adaptation to various actuating devices, including automated setups. Precision ground body (also available with a slightly oversize unground body to allow custom grinding to size). Index plungers are manufactured with precision working tolerances and are designed for a very light interference-fit installations to avoid binding of the mechanism.

TAPERED INDEX PLUNGERS BLANK MACHINABLE END (USA)

PART NO. INDEX PLUNGER	PART NO. BUSHING	PLUNGER DIA	A DIA NOMINAL	A DIA GROUND	A DIA UNGROUND	B	C	D	E	F	G	H	J	K	L	M DIA	N DIA	P DIA
CL-22014-TIP	CL-22032-TIPB	1/2	3/4	.7518/.7515	—	1-3/8	1/2	3/4	—	—	—	5/16	3/32	1/8	1/8	7/8	—	1/2
CL-22012-TIP	CL-22030-TIPB			—	.766/.765													
CL-22114-TIP	CL-22132-TIPB	3/4	1-1/8	1.1268/1.1265	—	2	5/8	1	—	—	—	3/8	1/8	1/8	1/8	1-1/4	—	3/4
CL-22112-TIP	CL-22130-TIPB			—	1.141/1.140													
CL-22214-TIP	CL-22232-TIPB	1	1-1/2	1.5021/1.5018	—	2-1/4	3/4	1-1/4	—	—	—	3/8	1/8	1/8	1/8	1-5/8	—	15/16
CL-22212-TIP	CL-22230-TIPB			—	1.516/1.515													

STRAIGHT INDEX PLUNGERS BLANK MACHINABLE END (USA)

PART NO. INDEX PLUNGER	PART NO. BUSHING	PLUNGER DIA	A DIA NOMINAL	A DIA GROUND	A DIA UNGROUND	B	C	D	E	F	G	H	J	K	L	M DIA	N DIA	P DIA
CL-22002-SIP	CL-22028-SIPB	1/2	3/4	.7518/.7515	—	1-3/8	1/2	3/4	—	—	—	5/16	3/32	1/8	1/8	7/8	—	1/2
CL-22102-SIP	CL-22128-SIPB	3/4	1-1/8	1.1268/1.1265	—	2	5/8	1	—	—	—	1/2	1/8	1/8	1/8	1-1/4	—	3/4
CL-22202-SIP	CL-22228-SIPB	1	1-1/2	1.5021/1.5018	—	2-1/4	3/4	1-1/4	—	—	—	5/8	1/8	1/8	1/8	1-5/8	—	15/16

Carr Lane MANUFACTURING CO.
4200 Carr Lane Ct., P.O. Box 191970
St. Louis, Missouri 63119-7970 USA
Phone: 314-647-6200, FAX: 314-647-5736
Web Site: www.carrlane.com

(Rev. 7-08)

SPRING STOP BUTTONS

BODY: ALUMINUM ALLOY; SPRING: SPRING STEEL
PLUNGER: MILD STEEL, CARBURIZED-HARDENED, BLACK OXIDE FINISH OR ZINC PLATED CLEAR CHROMATE (OR DELRIN®)

Large
CL-30A-SSB

Medium
CL-20A-SSB

Small
CL-10A-SSB

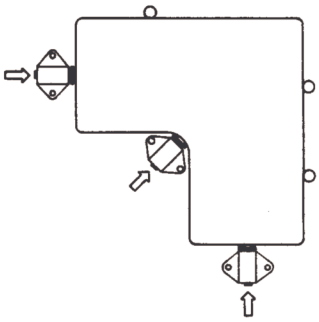

Spring Stop Buttons are ideal for holding a workpiece against its locators until clamps are in place, and for other light clamping jobs. Choice of three sizes in each type. The smallest of the three sizes is optionally available with light spring force. Note: Catalog photos are actual size.

Type A
Contact Button

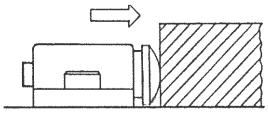

Spring-loaded plunger has a spherical radius to exert contact force at a single point. Choice of steel or Delrin® plunger.

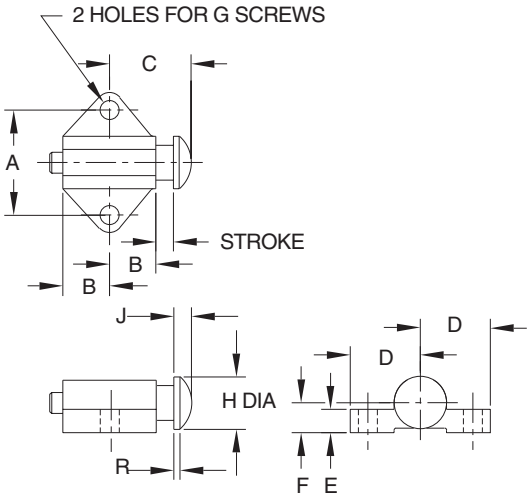

TYPE A – CONTACT BUTTON (STEEL)

PART NO. STANDARD FORCE	PART NO. LIGHT FORCE	STROKE	STANDARD CONTACT FORCE (LBS)			LIGHT CONTACT FORCE (LBS)			A	B	C	D	E	F	G DIA	H DIA	J	R
			INITIAL	HALFWAY	FINAL	INITIAL	HALFWAY	FINAL										
CL-10A-SSB	CL-10A-SSB-2	1/8	5	10	15	1.5	2	2.5	.656	11/32	19/32	7/16	3/16	7/32	#6-32 or M3.5	3/8	1/8	1/16
CL-20A-SSB	—	3/16	2	14	26	—	—	—	1.125	1/2	7/8	3/4	1/4	5/16	#10-32 or M5	9/16	3/16	1/16
CL-30A-SSB	—	1/4	16	32	48	—	—	—	1.500	11/16	1-7/32	1	1/4	7/16	1/4-20 or M6	13/16	9/32	9/64

TYPE A – CONTACT BUTTON (DELRIN)

CL-10A-SSBN	CL-10A-SSBN-2	1/8	5	10	15	1.5	2	2.5	.656	11/32	19/32	7/16	3/16	7/32	#6-32 or M3.5	3/8	1/8	1/16
CL-20A-SSBN	—	3/16	2	14	26	—	—	—	1.125	1/2	7/8	3/4	1/4	5/16	#10-32 or M5	9/16	3/16	1/16
CL-30A-SSBN	—	1/4	16	32	48	—	—	—	1.500	11/16	1-7/32	1	1/4	7/16	1/4-20 or M6	13/16	9/32	9/64

CarrLane®
MANUFACTURING CO.
4200 Carr Lane Ct., P.O. Box 191970
St. Louis, Missouri 63119-7970 USA
Phone: 314-647-6200, FAX: 314-647-5736
Web Site: www.carrlane.com

(Rev. 7-10)

SPRING STOP BUTTONS

BODY: ALUMINUM ALLOY; SPRING: SPRING STEEL
PLUNGER: MILD STEEL, CARBURIZED-HARDENED, BLACK OXIDE FINISH OR ZINC PLATED CLEAR CHROMATE (OR DELRIN)

Large
CL-30B-SSB

Medium
CL-20B-SSB

Small
CL-10B-SSB

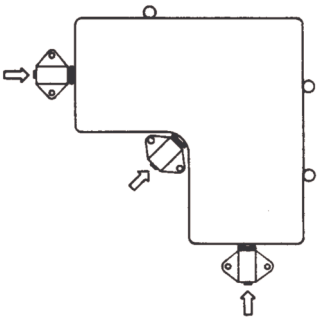

Spring Stop Buttons are ideal for holding a workpiece against its locators until clamps are in place, and for other light clamping jobs. Choice of three sizes in each type. The smallest of the three sizes is optionally available with light spring force. Note: Catalog photos are actual size.

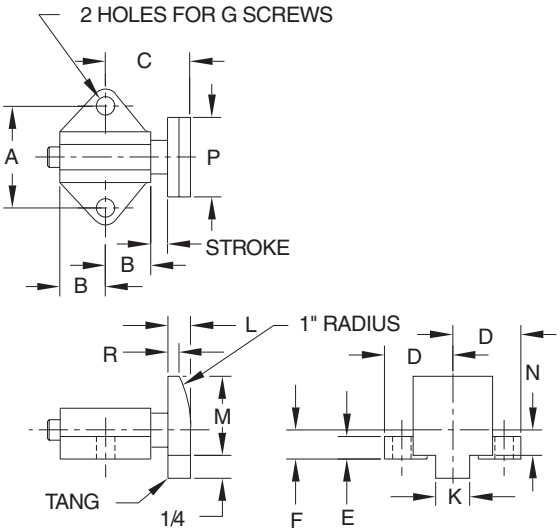

Type B
Flat Face with Tang

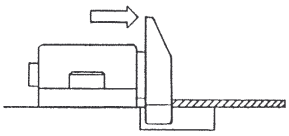

Designed for thin workpieces and sheets. Tang prevents sheet from sliding under plunger. Requires machining a slot in the fixture base for the tang. Large bevel on plunger makes loading easier.

TYPE B – FLAT FACE WITH TANG (STEEL)

PART NO. STANDARD FORCE	PART NO. LIGHT FORCE	STROKE	STANDARD CONTACT FORCE (LBS)			LIGHT CONTACT FORCE (LBS)			A	B	C	D	E	F	G DIA	K	L	M	N	P	R
			INITIAL	HALFWAY	FINAL	INITIAL	HALFWAY	FINAL													
CL-10B-SSB	CL-10B-SSB-2	1/8	5	10	15	1.5	2	2.5	.656	11/32	21/32	7/16	3/16	7/32	#6-32 or M3.5	1/4	3/16	5/8	3/16	5/8	1/16
CL-20B-SSB	—	3/16	2	14	26	—	—	—	1.125	1/2	15/16	3/4	1/4	5/16	#10-32 or M5	3/8	1/4	7/8	9/32	7/8	3/32
CL-30B-SSB	—	1/4	16	32	48	—	—	—	1.500	11/16	1-5/16	1	1/4	7/16	1/4-20 or M6	1/2	3/8	1-1/4	13/32	1-1/4	3/32

Carr Lane MANUFACTURING CO.
4200 Carr Lane Ct., P.O. Box 191970
St. Louis, Missouri 63119-7970 USA
Phone: 314-647-6200, FAX: 314-647-5736
Web Site: www.carrlane.com

(Rev. 7-10)

SPRING STOP BUTTONS

BODY: ALUMINUM ALLOY; SPRING: SPRING STEEL
PLUNGER: MILD STEEL, CARBURIZED-HARDENED, BLACK OXIDE FINISH OR ZINC PLATED CLEAR CHROMATE

Large
CL-30C-SSB

Medium
CL-20C-SSB

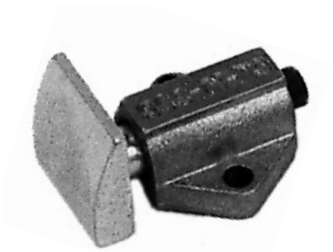

Small
CL-10C-SSB

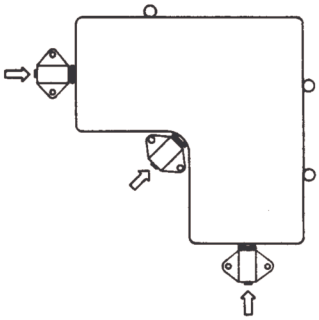

Spring Stop Buttons are ideal for holding a workpiece against its locators until clamps are in place, and for other light clamping jobs. Choice of three sizes in each type. The smallest of the three sizes is optionally available with light spring force. Note: Catalog photos are actual size.

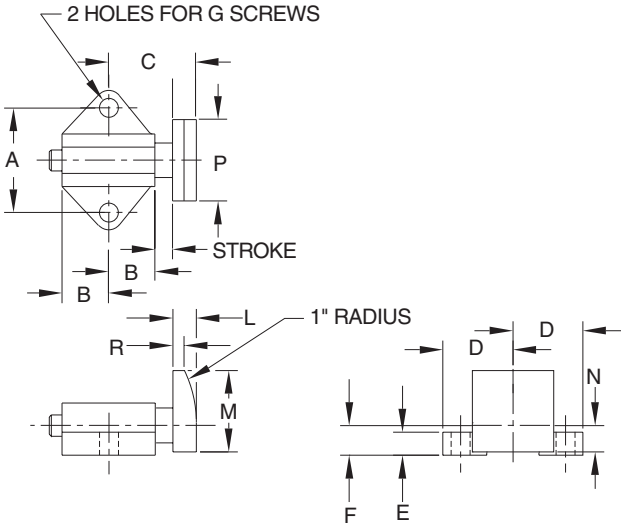

Type C
Flat Face

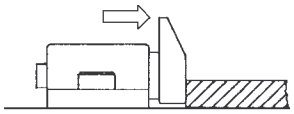

Flat contact surface is ideal for short workpieces. Large bevel on plunger makes loading easier.

TYPE C – FLAT FACE (STEEL)

PART NO. STANDARD FORCE	PART NO. LIGHT FORCE	STROKE	STANDARD CONTACT FORCE (LBS)			LIGHT CONTACT FORCE (LBS)			A	B	C	D	E	F	G DIA	K	L	M	N	P	R
			INITIAL	HALFWAY	FINAL	INITIAL	HALFWAY	FINAL													
CL-10C-SSB	CL-10C-SSB-2	1/8	5	10	15	1.5	2	2.5	.656	11/32	21/32	7/16	3/16	7/32	#6-32 or M3.5	—	3/16	5/8	3/16	5/8	1/16
CL-20C-SSB	—	3/16	2	14	26	—	—	—	1.125	1/2	15/16	3/4	1/4	5/16	#10-32 or M5	—	1/4	7/8	9/32	7/8	3/32
CL-30C-SSB	—	1/4	16	32	48	—	—	—	1.500	11/16	1-5/16	1	1/4	7/16	1/4-20 or M6	—	3/8	1-1/4	13/32	1-1/4	3/32

Carr Lane®
MANUFACTURING CO.
4200 Carr Lane Ct., P.O. Box 191970
St. Louis, Missouri 63119-7970 USA
Phone: 314-647-6200, FAX: 314-647-5736
Web Site: www.carrlane.com

(Rev. 3-07)

SPRING LOCATING PINS

PIN: MILD STEEL, CARBURIZED-HARDENED, ZINC PLATED CLEAR CHROMATE
SPRING: MUSIC WIRE. HOUSING: ALUMINUM

5/8 Dia | 1/2 Dia | 7/16 Dia | 7/16 Dia | 1/4 Dia

Hardened Steel Pin
Coil Spring

Our patented Spring Locating Pins are an extremely compact way to apply side force to a workpiece. The tapered contact pin is securely anchored in a spring base. Unit installs easily in a drilled hole. Available in five sizes, each in light, medium, or heavy force. Choice of steel, stainless steel, or delrin contact pin. Also available with a tapped receptacle (p. 133) for custom contact pins. Note: Catalog photos are actual size. Our most popular version is shown on this page, with a durable case-hardened steel contact pin and aluminum body containing a coil spring. Protective rubber seal around contact pin keeps out chips and coolant. This type has the most travel, so it allows the most part-size variation.

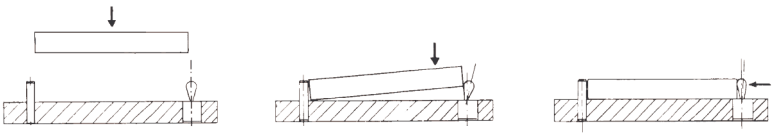

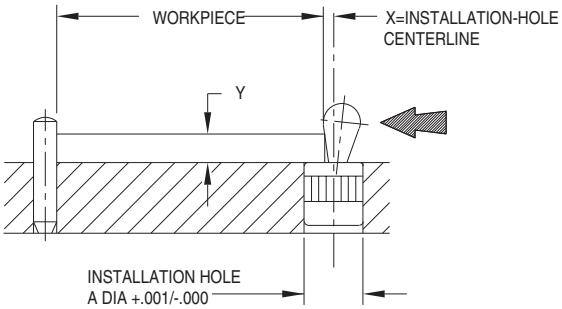

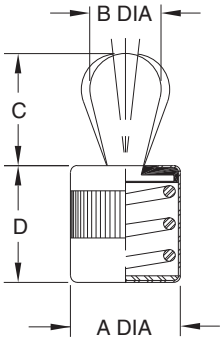

HARDENED STEEL PIN, COIL SPRING

PART NO.	A DIA	APPROX SIDE FORCE (LBS)	ALLOWABLE WORKPIECE TOLERANCE	B DIA	C	D	X DIMENSION WHEN Y EQUALS 1/16	1/8	3/16	1/4	5/16	3/8	7/16 OR MORE
CL-4-SLP-1	1/4	2.2	.020	.118	.158	.268	.022	.024	.024	.024	.024	.024	.024
CL-4-SLP-2		4.5											
CL-4-SLP-3		9											
CL-7-SLP-1	7/16	4.5	.031	.197	.236	.434	—	.055	.055	.055	.055	.055	.055
CL-7-SLP-2		11											
CL-7-SLP-3		22											
CL-7A-SLP-1	7/16	9	.039	.236	.394	.434	—	—	.049	.059	.059	.059	.059
CL-7A-SLP-2		17											
CL-7A-SLP-3		34											
CL-8-SLP-1	1/2	11	.051	.315	.530	.520	—	—	—	.077	.087	.087	.087
CL-8-SLP-2		22											
CL-8-SLP-3		45											
CL-10-SLP-1	5/8	22	.063	.394	.640	.705	—	—	—	—	.098	.107	.110
CL-10-SLP-2		45											
CL-10-SLP-3		67											

CarrLane®
MANUFACTURING CO.
4200 Carr Lane Ct., P.O. Box 191970
St. Louis, Missouri 63119-7970 USA
Phone: 314-647-6200, FAX: 314-647-5736
Web Site: www.carrlane.com

(Rev. 4-07)

SPRING LOCATING PINS

PIN: 300-SERIES STAINLESS STEEL
SPRING: SOLID POLYURETHANE. HOUSING: ALUMINUM

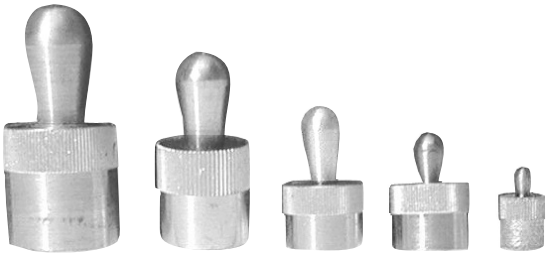

5/8 Dia | 1/2 Dia | 7/16 Dia | 7/16 Dia | 1/4 Dia

Stainless Steel Pin
Solid Polyurethane Spring

Stainless steel contact pin is ideal for corrosive environments and hygienic applications. Solid polyurethane body is covered by an aluminum shell.

STAINLESS STEEL PIN, SOLID POLYURETHANE SPRING

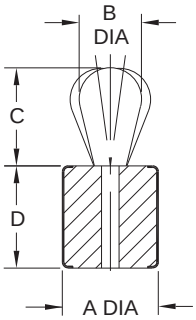

PART NO.	A DIA	APPROX SIDE FORCE (LBS)	ALLOWABLE WORKPIECE TOLERANCE	B DIA	C	D	X DIMENSION WHEN Y EQUALS						
							1/16	1/8	3/16	1/4	5/16	3/8	7/16 OR MORE
CL-4-SLPS-1	1/4	2.2	.008	.118	.158	.291	.022	.024	.024	.024	.024	.024	.024
CL-4-SLPS-2		4.5											
CL-7-SLPS-1	7/16	6.7	.016	.197	.292	.371	—	.055	.055	.055	.055	.055	.055
CL-7-SLPS-2		13											
CL-7-SLPS-3		20											
CL-7A-SLPS-1	7/16	6.7	.016	.236	.473	.371	—	—	.049	.059	.059	.059	.059
CL-7A-SLPS-2		13											
CL-7A-SLPS-3		20											
CL-8-SLPS-1	1/2	11	.024	.315	.512	.551	—	—	—	.077	.087	.087	.087
CL-8-SLPS-2		22											
CL-8-SLPS-3		33											
CL-10-SLPS-1	5/8	22	.031	.394	.640	.658	—	—	—	—	.098	.107	.110
CL-10-SLPS-2		45											
CL-10-SLPS-3		67											

APPLICATION EXAMPLES

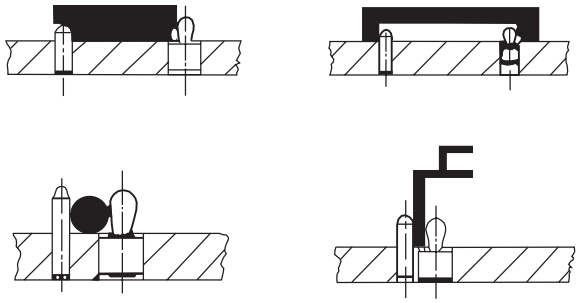

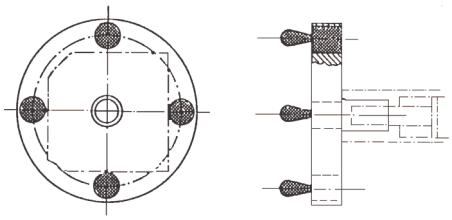

Can also be used as a gripper for light clamping.

MANUFACTURING CO.
4200 Carr Lane Ct., P.O. Box 191970
St. Louis, Missouri 63119-7970 USA
Phone: 314-647-6200, FAX: 314-647-5736
Web Site: www.carrlane.com

(Rev. 4-07)

SPRING LOCATING PINS

PIN: DELRIN
SPRING: SOLID POLYURETHANE. HOUSING: ALUMINIUM

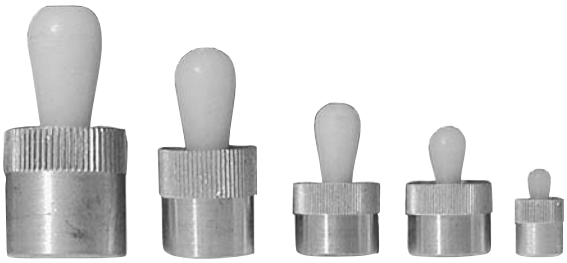

5/8 Dia | 1/2 Dia | 7/16 Dia | 7/16 Dia | 1/4 Dia

Delrin® Pin
Solid Polyurethane Spring

Delrin® contact pin avoids marring soft or finished surfaces. Solid polyurethane body is covered by an aluminium shell.

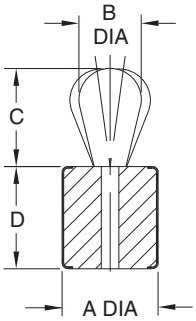

DELRIN® PIN, SOLID POLYURETHANE SPRING

PART NO.	A DIA	APPROX SIDE FORCE (LBS)	ALLOWABLE WORKPIECE TOLERANCE	B DIA	C	D	X DIMENSION WHEN Y EQUALS 1/16	1/8	3/16	1/4	5/16	3/8	7/16 OR MORE
CL-4-SLPP-1	1/4	2.2	.008	.118	.158	.291	.022	.024	.024	.024	.024	.024	.024
CL-4-SLPP-2		4.5											
CL-7-SLPP-1	7/16	6.7	.016	.197	.292	.371	—	.055	.055	.055	.055	.055	.055
CL-7-SLPP-2		13											
CL-7A-SLPP-1	7/16	6.7	.016	.236	.473	.371	—	—	.049	.049	.059	.059	.059
CL-7A-SLPP-2		13											
CL-8-SLPP-1	1/2	11	.024	.315	.512	.551	—	—	—	.077	.087	.087	.087
CL-8-SLPP-2		22											
CL-10-SLPP-1	5/8	22	.031	.394	.640	.658	—	—	—	—	.098	.107	.110
CL-10-SLPP-2		45											

Installation Tools

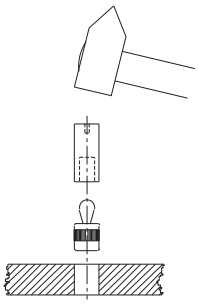

INSTALLATION TOOLS

PART NO.	USE TO INSTALL		
CL-4-SLPT	CL-4-SLP-x	CL-4-SLPS-x	CL-4-SLPP-x
CL-7-SLPT	CL-7-SLP-x	CL-7-SLPS-x	CL-7-SLPP-x
CL-7A-SLPT	CL-7A-SLP-x	CL-7A-SLPS-x	CL-7A-SLPP-x
CL-8-SLPT	CL-8-SLP-x	CL-8-SLPS-x	CL-8-SLPP-x
CL-10-SLPT	CL-10-SLP-x	CL-10-SLPS-x	CL-10-SLPP-x

Handy tool to speed up installation of Spring Locating Pins. Use with any of the three types.

Carr Lane®
MANUFACTURING CO.
4200 Carr Lane Ct., P.O. Box 191970
St. Louis, Missouri 63119-7970 USA
Phone: 314-647-6200, FAX: 314-647-5736
Web Site: www.carrlane.com

(Rev. 11-04)

SPRING LOCATING PINS

RECEPTACLE: MILD STEEL, BLACK OXIDE FINISH
SPRING: MUSIC WIRE. HOUSING: ALUMINUM

5/8 Dia 7/16 Dia

Tapped Receptacle for Custom Pin Coil Spring

This version has a tapped receptacle for installing custom contact pins. Available in two sizes, each in light, medium, or heavy force. Dimension E is a theoretical contact height which allows F maximum travel and provides the side force listed in the table. Taller pins will have more travel and less force, while shorter pins will have less travel and more force. To achieve maximum travel, the bottom diameter of the custom pin should be approximately equal to the C dimension.

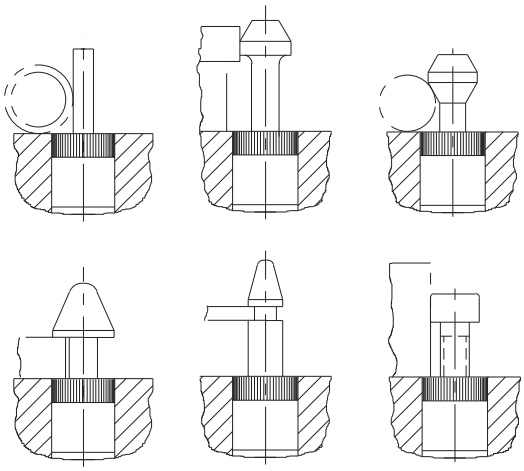

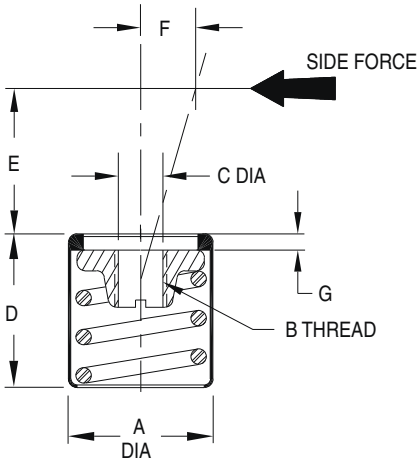

TAPPED RECEPTACLE FOR CUSTOM PIN, COIL SPRING

PART NO.	A DIA	B	APPROX SIDE FORCE (LBS)	C	D	E	F	G
CL-7-SLPR-1	7/16	#8-32	4.5	.164	.434	.16	.063	.04
CL-7-SLPR-2			11					
CL-7-SLPR-3			22					
CL-10-SLPR-1	5/8	1/4-20	22	.250	.705	.45	.126	.06
CL-10-SLPR-2			45					
CL-10-SLPR-3			67					

Eccentric Liners

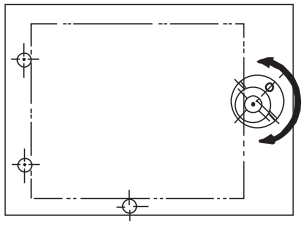

Eccentric Liners provide additional adjustment for workpieces with looser tolerances. Steel.

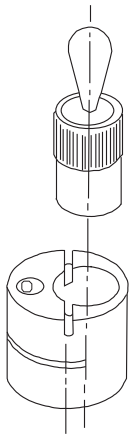

ECCENTRIC LINERS

PART NO.	FITS THESE PINS	A DIA. NOMINAL	A DIA. ACTUAL	B DIA. NOMINAL	B DIA. ACTUAL	C	D
CL-4-SLPE	CL-4-SLP-x CL-4-SLPS-x CL-4-SLPP-x	1/4	.2500 .2507	1/2	.5000 .4983	.390	.079
CL-7-SLPE	CL-7-SLP-x CL-7-SLPS-x CL-7-SLPP-x CL-7A-SLP-x CL-7A-SLPS-x CL-7A-SLPP-x	7/16	.4375 .4386	11/16	.6875 .6858	.469	.079
CL-8-SLPE	CL-8-SLP-x CL-8-SLPS-x CL-8-SLPP-x	1/2	.5000 .5011	3/4	.7500 .7480	.547	.079
CL-10-SLPE	CL-10-SLP-x CL-10-SLPS-x CL-10-SLPP-x	5/8	.6250 .6261	1	1.0000 .9980	.705	.118

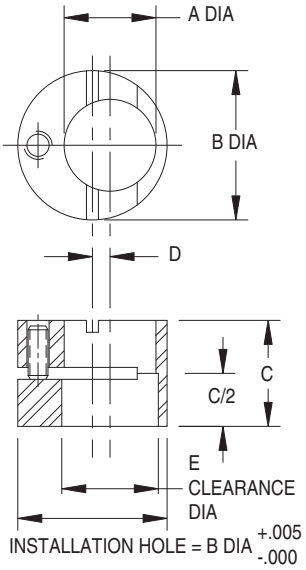

CarrLane®
MANUFACTURING CO.
4200 Carr Lane Ct., P.O. Box 191970
St. Louis, Missouri 63119-7970 USA
Phone: 314-647-6200, FAX: 314-647-5736
Web Site: www.carrlane.com

(Rev. 6-09)

LEVELING FEET

STEEL: 12L14, CARBURIZED-HARDENED (BODY ONLY), ZINC PLATED YELLOW CHROMATE OR BLACK OXIDE FINISH
STAINLESS STEEL: 300 SERIES

Steel
Zinc Plated

Steel
Zinc Plated
with Delrin® Pad

Steel
Black Oxide Finish

Stainless Steel

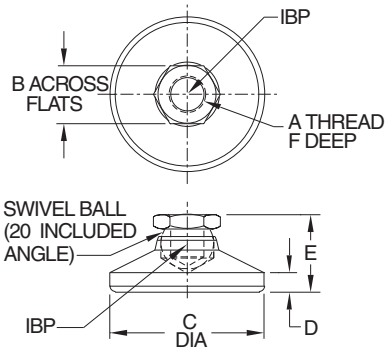

ADDITIONAL SIZES NOW AVAILABLE!

High-quality, heavy-duty leveling foot with large-diameter pad. Large ball provides high load capacity with a 20° total swivel angle.

USA

PART NO. STEEL ZINC PLATED	PART NO. STEEL ZINC PLATED WITH DELRIN® PAD	PART NO. STEEL BLACK OXIDE	PART NO. STAINLESS	A	B	C DIA	D	E	F	LOAD RATING (LBS)* STEEL & STAINLESS	LOAD RATING (LBS)* DELRIN®
CL-3-LF	CL-3-LFN	CL-3-LF-BO	CL-3-LF-S	#10-32	3/8	3/4	7/64	17/32	1/4	700	150
CL-4-LF	CL-4-LFN	CL-4-LF-BO	CL-4-LF-S	1/4-20	1/2	1	5/32	45/64	5/16	1,000	200
CL-5-LF	CL-5-LFN	CL-5-LF-BO	CL-5-LF-S	5/16-18	9/16	1-1/8	3/16	3/16	3/8	1,500	250
CL-6-LF	CL-6-LFN	CL-6-LF-BO	CL-6-LF-S	3/8-16	5/8	1-1/4	3/16	7/8	13/32	2,300	300
CL-8-LF	CL-8-LFN	CL-8-LF-BO	CL-8-LF-S	1/2-13	3/4	1-7/8	1/4	1-1/8	1/2	4,200	700
CL-10-LF	CL-10-LFN	CL-10-LF-BO	CL-10-LF-S	5/8-11	15/16	2-1/2	5/16	1-1/4	1/2	6,600	1,200
CL-12-LF	CL-12-LFN	CL-12-LF-BO	CL-12-LF-S	3/4-10	1-1/8	3	1/2	1-1/2	5/8	10,000	1,800
CL-16-LF	—	CL-16-LF-BO	—	1"-8	1-1/2	4	13/32	1-7/8	15/16	18,000	

METRIC

CLM-6-LF	CLM-6-LFN	CLM-6-LF-BO	CLM-6-LF-S	M6	10mm	1	5/32	45/64	5/16	900	180
CLM-8-LF	CLM-8-LFN	CLM-8-LF-BO	CLM-8-LF-S	M8	13mm	1-1/8	3/16	13/16	3/8	1,500	250
CLM-10-LF	CLM-10-LFN	CLM-10-LF-BO	CLM-10-LF-S	M10	17mm	1-1/4	3/16	7/8	13/32	2,600	300
CLM-12-LF	CLM-12-LFN	CLM-12-LF-BO	CLM-12-LF-S	M12	19mm	1-7/8	1/4	1-1/8	1/2	3,800	700
CLM-16-LF	CLM-16-LFN	CLM-16-LF-BO	CLM-16-LF-S	M16	24mm	2-1/2	5/16	1-1/4	1/2	7,200	1,200
CLM-20-LF	CLM-20-LFN	CLM-20-LF-BO	CLM-20-LF-S	M20	30mm	3	1/2	1-1/2	5/8	11,000	1,800

*Safe static load with stud securely mounted in a plate at least one-stud-diameter thick, at maximum stud extension (2:1 safety factor). Leveling Feet are rated with the same-length stud as on Stud Leveling Feet. Load capacity will drop significantly with longer studs.

Rubber Pad Covers
for Leveling Feet

Rubber Pad Covers fit over the bottom of Leveling Feet. These pad covers provide increased gripping to prevent sliding on sloped or uneven surfaces. They reduce walking and transmitted machine vibrations. Durable PVC material. Note: load capacity will be reduced with Rubber Pad Covers…see table below.

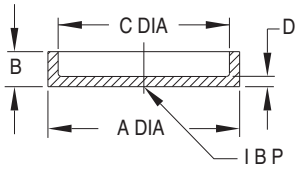

RUBBER PAD COVERS

PART NO.	FITS LEVELING FEET	A DIA	B	C DIA	D	LOAD RATING (LBS)
CL-6-RPC	3/8-16 and M10	1-1/2	3/8	1-1/4	1/8	300
CL-8-RPC	1/2-13 and M12	2-1/8	3/8	1-7/8		700
CL-10-RPC	5/8-11 and M16	2-3/4	7/16	2-1/2		1,200
CL-12-RPC	3/4-10 and M20	3-1/4	1/2	3		1,800

Carr Lane®
MANUFACTURING CO.
4200 Carr Lane Ct., P.O. Box 191970
St. Louis, Missouri 63119-7970 USA
Phone: 314-647-6200, FAX: 314-647-5736
Web Site: www.carrlane.com

(Rev. 7-10)

STUD LEVELING FEET

STEEL: 12L14, CARBURIZED-HARDENED (BODY ONLY), ZINC PLATED YELLOW CHROMATE OR BLACK OXIDE FINISH
STAINLESS STEEL: 300 SERIES

NOW ALSO AVAILABLE WITH LONGER STUDS!

Steel Zinc Plated

Steel Zinc Plated with Delrin® Pad

Steel Black Oxide Finish

Stainless Steel

High-quality, heavy-duty leveling foot with large-diameter pad and integral stud. Stud and ball are one solid piece. Large ball provides high load capacity with a 20° total swivel angle.

* Safe static load with stud securely mounted in a plate at least one-stud-diameter thick, at maximum stud extension (2:1 safety factor). Load capacity will drop significantly with longer studs.

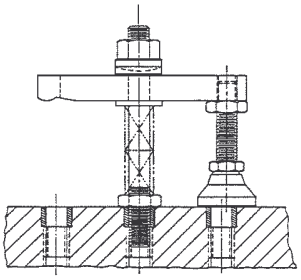

Can also be used as a clamp rest for Tapped-Heel Clamp Straps.

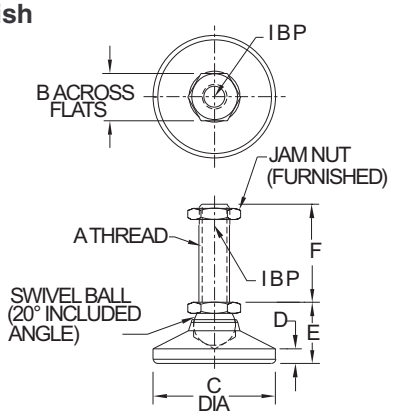

USA

PART NO. STEEL ZINC PLATED	PART NO. STEEL ZINC PLATED WITH DELRIN® PAD	PART NO. STEEL BLACK OXIDE	PART NO. STAINLESS	A	B	C DIA	D	E	F	LOAD RATING (LBS)* STEEL & STAINLESS	LOAD RATING (LBS)* DELRIN®
CL-3-SLF	CL-3-SLFN	CL-3-SLF-BO	CL-3-SLF-S	#10-32	3/8	3/4	7/64	17/32	1	700	150
CL-3-SLF-2	CL-3-SLFN-2	CL-3-SLF-2-BO	CL-3-SLF-2-S						2	200	
CL-4-SLF	CL-4-SLFN	CL-4-SLF-BO	CL-4-SLF-S	1/4-20	1/2	1	5/32	45/64	1-1/4	1,000	200
CL-4-SLF-2.5	CL-4-SLFN-2.5	CL-4-SLF-2.5-BO	CL-4-SLF-2.5-S						2-1/2	250	
CL-5-SLF	CL-5-SLFN	CL-5-SLF-BO	CL-5-SLF-S	5/16-18	9/16	1-1/8	3/16	13/16	2	1,500	250
CL-5-SLF-4	CL-5-SLFN-4	CL-5-SLF-4-BO	CL-5-SLF-4-S						4	400	
CL-6-SLF	CL-6-SLFN	CL-6-SLF-BO	CL-6-SLF-S	3/8-16	5/8	1-1/4	3/16	7/8	2	2,300	300
CL-6-SLF-4	CL-6-SLFN-4	CL-6-SLF-4-BO	CL-6-SLF-4-S						4	600	
CL-8-SLF	CL-8-SLFN	CL-8-SLF-BO	CL-8-SLF-S	1/2-13	3/4	1-7/8	1/4	1-1/8	2	4,200	700
CL-8-SLF-4	CL-8-SLFN-4	CL-8-SLF-4-BO	CL-8-SLF-4-S						4	1100	
CL-10-SLF	CL-10-SLFN	CL-10-SLF-BO	CL-10-SLF-S	5/8-11	15/16	2-1/2	5/16	1-1/4	2	6,600	1,200
CL-10-SLF-4	CL-10-SLFN-4	CL-10-SLF-2-BO	CL-10-SLF-4-S						4	1700	
CL-12-SLF	CL-12-SLFN	CL-12-SLF-BO	CL-12-SLF-S	3/4-10	1-1/8	3	1/2	1-1/2	2	10,000	1,800
CL-12-SLF-4	CL-12-SLFN-4	CL-12-SLF-2-BO	CL-12-SLF-4-S						4	2500	
CL-16-SLF	—	CL-16-SLF-BO	CL-16-SLF-S	1"-8	1-1/2	4	13/32	1-7/8	4-1/4	18,000	—
CL-16-SLF-8	—	CL-16-SLF-8-BO	CL-16-SLF-8-S						8	4500	

METRIC

CLM-6-SLF	CLM-6-SLFN	CLM-6-SLF-BO	CLM-6-SLF-S	M6	10mm	1	5/32	45/64	1.57	900	180
CLM-8-SLF	CLM-8-SLFN	CLM-8-SLF-BO	CLM-8-SLF-S	M8	13mm	1-1/8	3/16	13/16	1.97	1,500	250
CLM-10-SLF	CLM-10-SLFN	CLM-10-SLF-BO	CLM-10-SLF-S	M10	17mm	1-1/4	3/16	7/8	2	2,600	300
CLM-12-SLF	CLM-12-SLFN	CLM-12-SLF-BO	CLM-12-SLF-S	M12	19mm	1-7/8	1/4	1-1/8		3,800	700
CLM-16-SLF	CLM-16-SLFN	CLM-16-SLF-BO	CLM-16-SLF-S	M16	24mm	2-1/2	5/16	1-1/4		7,200	1,200
CLM-20-SLF	CLM-20-SLFN	CLM-20-SLF-BO	CLM-20-SLF-S	M20	30mm	3	1/2	1-1/2		11,000	1,800

Carr Lane®
MANUFACTURING CO.
4200 Carr Lane Ct., P.O. Box 191970
St. Louis, Missouri 63119-7970 USA
Phone: 314-647-6200, FAX: 314-647-5736
Web Site: www.carrlane.com

(Rev. 6-06)

JIG FEET LEVELING

PATENT NO. 2,531,892
SCREW: 12L14 STEEL, CARBURIZED-HARDENED, ZINC PLATED YELLOW CHROMATE
FOOT: 12L14 STEEL, ZINC PLATED YELLOW CHROMATE

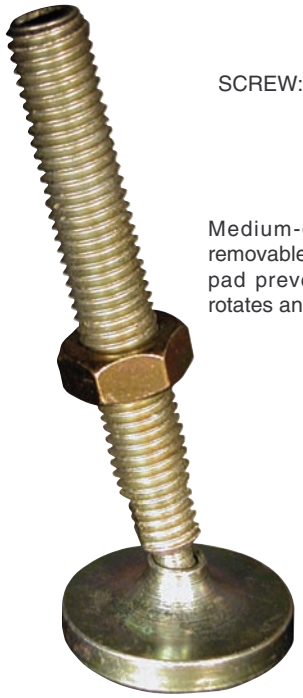

Medium-duty leveling foot with removable pad. Lefthand thread in pad prevents backout while pad rotates and pivots freely.

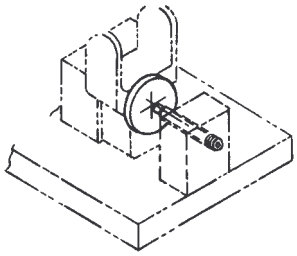

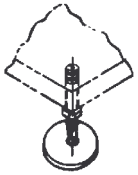

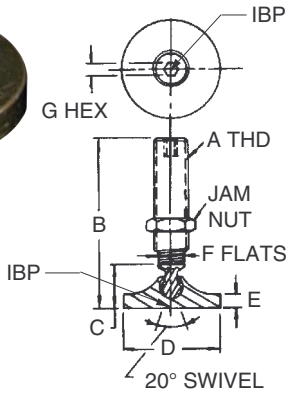

USA

PART NO.	A	B	C	D DIA	E	F	G	*LOAD RATING (LBS)
CL-1-JFL	1/2-13	2-7/32	7/8	1-1/2	1/4	3/8	1/4	1,400
CL-2-JFL		4-7/32						430
CL-3-JFL	5/8-11	3-1/4	29/32	2	5/16	1/2	5/16	2,900
CL-4-JFL		5-1/4						1,200
CL-5A-JFL	3/4-10	3-1/2	1-1/16	2-1/2	3/8	9/16	3/8	3,700
CL-6-JFL		5-17/32						1,800
CL-7A-JFL	1-8	3-1/2	1-19/32	3-1/2	1/2	3/4	1/2	6,700
CL-8-JFL		5-19/32						6,400

METRIC

CLM-1-JFL	M12	2.17	.87	1-1/2	1/4	10mm	6mm	1,400
CLM-2-JFL		4.33						430
CLM-3-JFL	M16	3.35	.91	2	5/16	13mm	8mm	2,900
CLM-4-JFL		5.31						1,200
CLM-5A-JFL	M20	3.54	1.06	2-1/2	3/8	17mm	10mm	3,700
CLM-6-JFL		5.51						1,800
CLM-7A-JFL	M24	3.54	1.61	3-1/2	1/2	19mm	12mm	6,700
CLM-8-JFL		5.71						6,400

JIG FEET LEVELING ASSEMBLIES

MILD STEEL, BLACK OXIDE FINISH

Complete leveling assembly includes radius-head screw, plate, and hex nut.

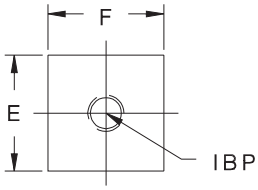

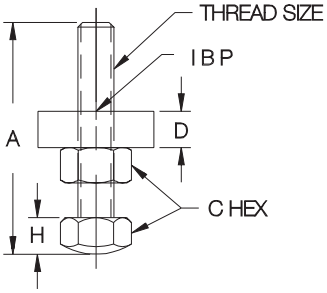

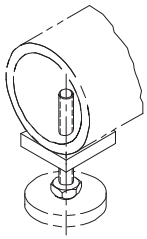

USA

PART NO.	THREAD SIZE	A	C	D	E	F	H	*LOAD RATING (LBS)
CL-1-JF	3/8-16	3	11/16	1/2	1-1/2	1-3/4	.42	2,300
CL-2-JF	1/2-13	4	7/8		1-3/4	2	.53	4,200
CL-3-JF	5/8-11	4	1-1/16	5/8	2	2	.63	6,600
CL-4-JF	3/4-10		1-1/4				.75	10,000
CL-5-JF	1-8	5	1-5/8	3/4			1.06	18,000

METRIC

CLM-10-JF	M10	2.95	17mm	1/2	1-1/2	1-3/4	.43	2,600
CLM-12-JF	M12	3.94	19mm		1-3/4	2	.55	3,800
CLM-16-JF	M16	3.94	24mm	5/8	2	2	.63	7,200
CLM-20-JF	M20		30mm				.75	11,000
CLM-24-JF	M24	5.12	36mm	3/4			1.06	16,000

* Safe static load with stud securely mounted in a plate at least one-stud-diameter thick, at maximum stud extension (2:1 safety factor). Jig Feet Leveling Assemblies are rated with the standard plate provided.

Carr Lane®
MANUFACTURING CO.
4200 Carr Lane Ct., P.O. Box 191970
St. Louis, Missouri 63119-7970 USA
Phone: 314-647-6200, FAX: 314-647-5736
Web Site: www.carrlane.com

(Rev. 3-07)

THREADED TUBE ENDS

BODY: BLACK NYLON THERMOPLASTIC
THREADED INSERT: BRASS, MOLDED IN

Round

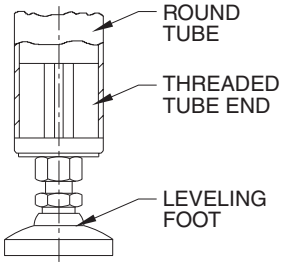

Ideal for mounting a Leveling Foot into the end of a round tube. High-strength ribbed design presses into the tube end, up to the shoulder, providing 1100 lbs load capacity. Available in three thread sizes, to fit round tubing with 1-1/2" outside diameter and .065 to .070" wall thickness.

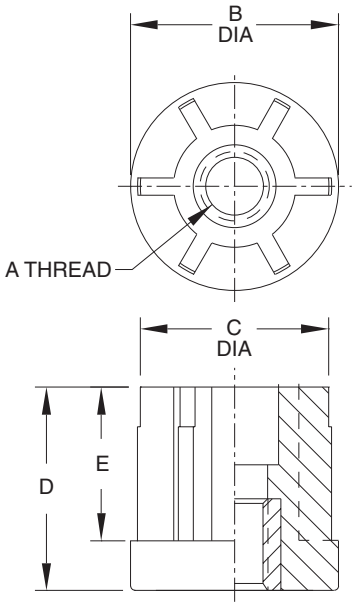

ROUND (USA)

PART NO.	TUBING EXTERNAL DIA	TUBING WALL THICKNESS	A	B DIA	C DIA	D	E	LOAD RATING (LBS)
CL-6-TTER-112	1.50	.065/.070	3/8-16	1.50	1.40	1.70	1.34	1100
CL-8-TTER-112			1/2-13					
CL-10-TTER-112			5/8-11					

Square

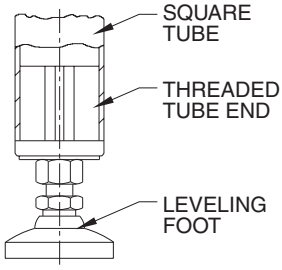

Ideal for mounting a Leveling Foot into the end of a square tube. High-strength ribbed design presses into the tube end, up to the shoulder, providing 1300 lbs load capacity. Available in two thread sizes, to fit 1-1/2" square tubing with .065 to .070" wall thickness. Also available to fit 1-1/2" heavy-wall square tubing with .120 to .130" wall thickness.

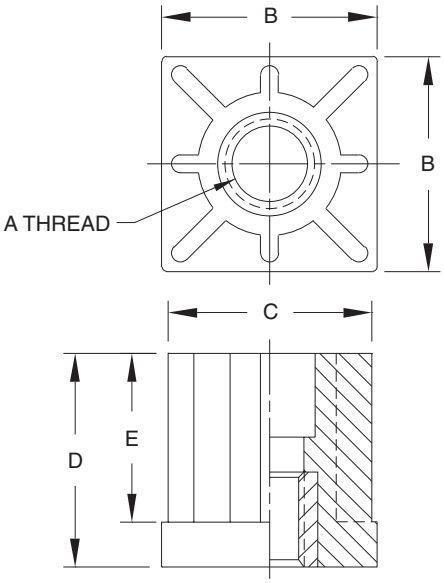

SQUARE (USA)

PART NO.	TUBING EXTERNAL DIA	TUBING WALL THICKNESS	A	B	C	D	E	LOAD RATING (LBS)
CL-8-TTES-112	1.50	.065/.070	1/2-13	1.50	1.37	1.69	1.38	1300
CL-10-TTES-112			5/8-11					
CL-8-TTES-112H		.120/.130	1/2-13		1.25			
CL-10-TTES-112H			5/8-11					

Carr Lane MANUFACTURING CO.
4200 Carr Lane Ct., P.O. Box 191970
St. Louis, Missouri 63119-7970 USA
Phone: 314-647-6200, FAX: 314-647-5736
Web Site: www.carrlane.com

(Rev. 6-06)

SWIVEL PADS

PAD: 12L14 STEEL, CARBURIZED-HARDENED, BLACK OXIDE FINISH OR DELRIN®
NUT: 12L14 STEEL, BLACK OXIDE FINISH

Heavy-duty swivel foot pivots to contact sloped surfaces evenly. Large ball provides high load capacity with a 18° total swivel angle. Choice of steel or Delrin® pad.

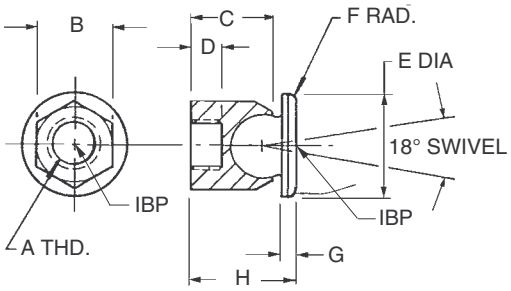

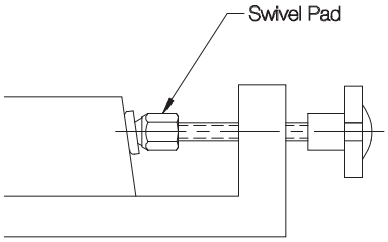

USA

PART NO. STEEL PAD	PART NO. DELRIN® PAD	A	B	C	D	E DIA	F	G	H
CL-1-SPA	CL-1-SPAN	1/4-20	1/2	.50	.23	5/8	.06	.10	.67
CL-2-SPA	CL-2-SPAN	5/16-18	9/16	.58	.27	3/4			.75
CL-3-SPA	CL-3-SPAN	3/8-16	5/8	.71	.29	7/8		.12	.91
CL-4-SPA	CL-4-SPAN	1/2-13	3/4	.81	.31	1	.09	.15	1.05
CL-5-SPA	CL-5-SPAN	5/8-11	7/8	1.00	.35	1-1/8			1.25
CL-6-SPA	—	3/4-10	1-1/16	1.12		1-1/4			1.38
CL-7-SPA	—	1-8	1-3/8	1.50		1-5/8		.20	1.82

METRIC

CLM-6-SPA	—	M6	10mm	.56	.23	1/2	.04	.08	.67
CLM-8-SPA	—	M8	13mm	.58	.22	3/4	.06	.10	.75
CLM-10-SPA	—	M10	17mm	.71	.29	7/8		.12	.91
CLM-12-SPA	—	M12	19mm	.81	.31	1	.09	.15	1.05
CLM-16-SPA	—	M16	24mm	1.00	.35	1-1/8			1.25
CLM-20-SPA	—	M20	30mm	1.12		1-1/4			1.38

SWIVEL NUTS

NUT: 12L14 STEEL, CARBURIZED-HARDENED, BLACK OXIDE FINISH
PAD: 12L14 STEEL, BLACK OXIDE FINISH

Nut turns freely without pivoting while pad remains stationary, to avoid moving or marring the workpiece.

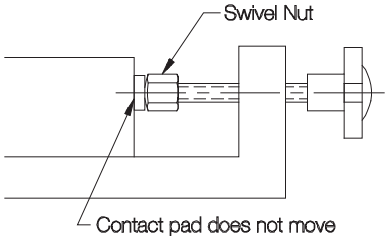

USA

PART NO.	A	B	C	D	E DIA
CL-4-SN	1/4-20	5/16	7/16	3/16	3/8
CL-5-SN	5/16-18	3/8	15/32	1/4	7/16
CL-6-SN	3/8-16	7/16	17/32	17/64	1/2
CL-8-SN	1/2-13	5/8	21/32	3/8	11/16
CL-10-SN	5/8-11	3/4	27/32	7/16	7/8
CL-12-SN	3/4-10	7/8	1	1/2	1

METRIC

CLM-6-SN	M6	8mm	.43	3/16	.39
CLM-10-SN	M10	13mm	.55	17/64	.51
CLM-12-SN	M12	17mm	.67	3/8	.71

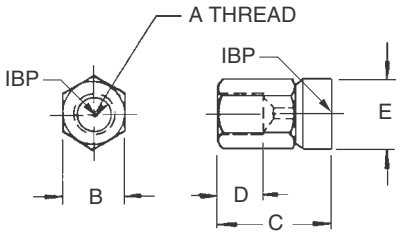

Carr Lane®
MANUFACTURING CO.
4200 Carr Lane Ct., P.O. Box 191970
St. Louis, Missouri 63119-7970 USA
Phone: 314-647-6200, FAX: 314-647-5736
Web Site: www.carrlane.com

(Rev. 4-07)

SWIVEL PAD FEET

STEEL PAD: 12L14 STEEL, ZINC PLATED YELLOW CHROMATE OR BLACK OXIDE FINISH
DELRIN® PAD: WHITE DELRIN 500. STAINLESS PAD: 300-SERIES STAINLESS STEEL
STEEL NUT: 12L14 STEEL, CARBURIZED-HARDENED ZINC PLATED YELLOW CHROMATE OR BLACK OXIDE FINISH
STAINLESS NUT: 300-SERIES STAINLESS STEEL

Steel Zinc Plated

Steel Zinc Plated with Delrin® Pad

Steel Black Oxide Finish

Stainless Steel

NOW ALSO AVAILABLE IN METRIC!

Heavy-duty swivel foot pivots to contact sloped surfaces evenly. Large ball provides high load capacity with a 20° total swivel angle. Available in steel (zinc plated or black oxide finish), steel with a Delrin® pad, and stainless steel.

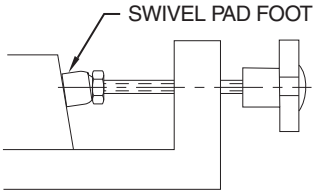

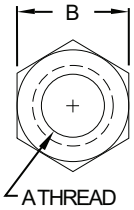

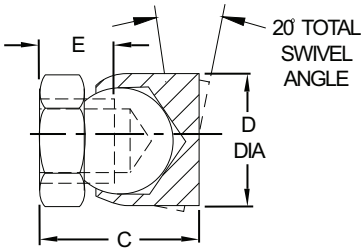

STEEL — ZINC PLATED (USA)

PART NO.	A	B	C	D DIA	E
CL-4-SPF	1/4-20	1/2	5/8	5/8	5/16
CL-5-SPF	5/16-18	9/16	3/4	11/16	3/8
CL-6-SPF	3/8-16	5/8	13/16	3/4	
CL-8-SPF	1/2-13	3/4	15/16	7/8	7/16
CL-10-SPF	5/8-11	7/8	1	1	
CL-12-SPF	3/4-10	1-1/16	1-11/32	1-1/4	5/8

STEEL — ZINC PLATED (METRIC)

PART NO.	A	B	C	D DIA	E
CLM-6-SPF	M6	10mm	5/8	5/8	5/16
CLM-8-SPF	M8	13mm	3/4	11/16	3/8
CLM-10-SPF	M10	17mm	13/16	3/4	
CLM-12-SPF	M12	19mm	15/16	7/8	7/16
CLM-16-SPF	M16	24mm	1	1	
CLM-20-SPF	M20	30mm	1-11/32	1-1/4	5/8

STEEL — ZINC PLATED WITH DELRIN® PAD (USA)

CL-4-SPFN	1/4-20	1/2	5/8	5/8	5/16
CL-5-SPFN	5/16-18	9/16	3/4	11/16	3/8
CL-6-SPFN	3/8-16	5/8	13/16	3/4	
CL-8-SPFN	1/2-13	3/4	15/16	7/8	7/16
CL-10-SPFN	5/8-11	7/8	1	1	
CL-12-SPFN	3/4-10	1-1/16	1-11/32	1-1/4	5/8

STEEL — ZINC PLATED WITH DELRIN® PAD (METRIC)

CLM-6-SPFN	M6	10mm	5/8	5/8	5/16
CLM-8-SPFN	M8	13mm	3/4	11/16	3/8
CLM-10-SPFN	M10	17mm	13/16	3/4	
CLM-12-SPFN	M12	19mm	15/16	7/8	7/16
CLM-16-SPFN	M16	24mm	1	1	
CLM-20-SPFN	M20	30mm	1-11/32	1-1/4	5/8

STEEL — BLACK OXIDE FINISH (USA)

CL-4-SPF-BO	1/4-20	1/2	5/8	5/8	5/16
CL-5-SPF-BO	5/16-18	9/16	3/4	11/16	3/8
CL-6-SPF-BO	3/8-16	5/8	13/16	3/4	
CL-8-SPF-BO	1/2-13	3/4	15/16	7/8	7/16
CL-10-SPF-BO	5/8-11	7/8	1	1	
CL-12-SPF-BO	3/4-10	1-1/16	1-11/32	1-1/4	5/8

STEEL — BLACK OXIDE FINISH (METRIC)

CLM-6-SPF-BO	M6	10mm	5/8	5/8	5/16
CLM-8-SPF-BO	M8	13mm	3/4	11/16	3/8
CLM-10-SPF-BO	M10	17mm	13/16	3/4	
CLM-12-SPF-BO	M12	19mm	15/16	7/8	7/16
CLM-16-SPF-BO	M16	24mm	1	1	
CLM-20-SPF-BO	M20	30mm	1-11/32	1-1/4	5/8

STAINLESS STEEL (USA)

CL-4-SPF-S	1/4-20	1/2	5/8	5/8	5/16
CL-5-SPF-S	5/16-18	9/16	3/4	11/16	3/8
CL-6-SPF-S	3/8-16	5/8	13/16	3/4	
CL-8-SPF-S	1/2-13	3/4	15/16	7/8	7/16
CL-10-SPF-S	5/8-11	7/8	1	1	
CL-12-SPF-S	3/4-10	1-1/16	1-11/32	1-1/4	5/8

STAINLESS STEEL (METRIC)

CLM-6-SPF-S	M6	10mm	5/8	5/8	5/16
CLM-8-SPF-S	M8	13mm	3/4	11/16	3/8
CLM-10-SPF-S	M10	17mm	13/16	3/4	
CLM-12-SPF-S	M12	19mm	15/16	7/8	7/16
CLM-16-SPF-S	M16	24mm	1	1	
CLM-20-SPF-S	M20	30mm	1-11/32	1-1/4	5/8

Carr Lane®
MANUFACTURING CO.
4200 Carr Lane Ct., P.O. Box 191970
St. Louis, Missouri 63119-7970 USA
Phone: 314-647-6200, FAX: 314-647-5736
Web Site: www.carrlane.com

(Rev. 5-07)

ROUND GRIPPERS

NOW ALSO AVAILABLE IN METRIC!

SERRATED — M-2 TOOL STEEL, HEAT TREATED RC 60-62, BLACK OXIDE FINISH
SERRATED — ALLOY STEEL, HEAT TREATED, WITH BRAZED CARBIDE INSERT
SERRATED — SOLID CARBIDE
FLAT — ALLOY STEEL, HEAT TREATED, WITH BRAZED CARBIDE PAD
FLAT — 8620 STEEL, CARBURIZED-HARDENED, BLACK OXIDE FINISH
FLAT — DELRIN®

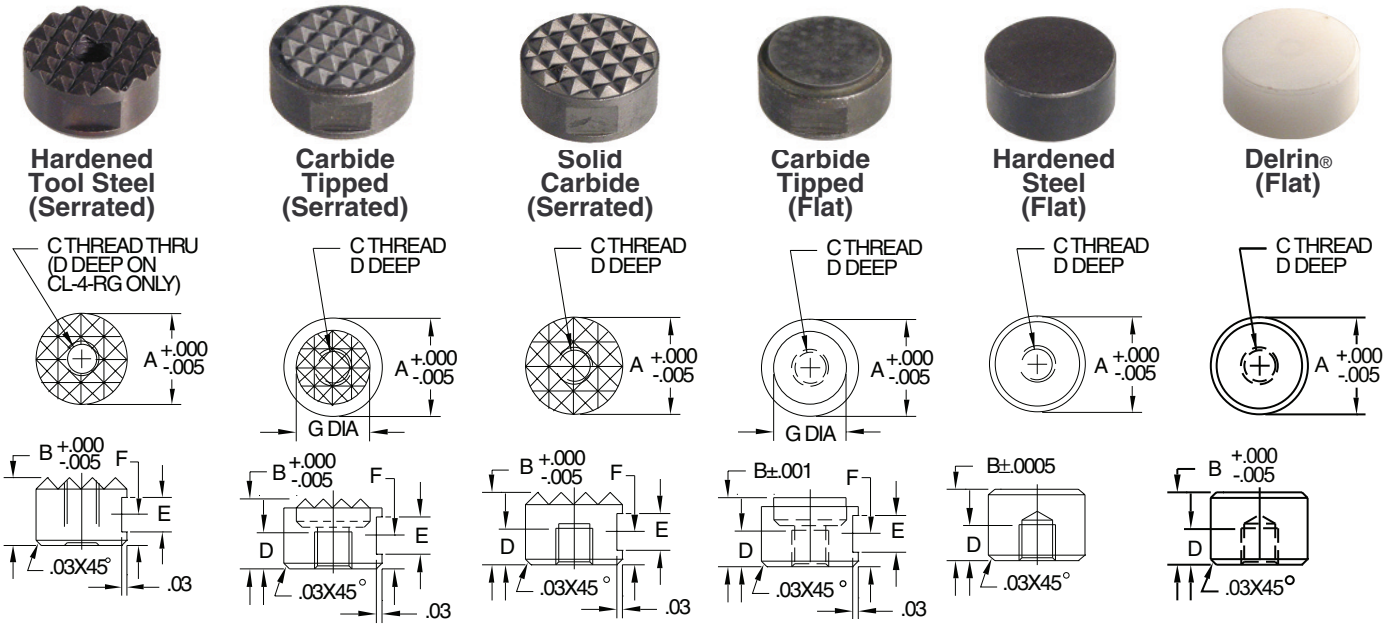

Grippers are hardened, replaceable inserts used to provide additional holding force and/or wear resistance when installed in a fixture. Serrated grippers are designed to slightly penetrate the workpiece to significantly increase gripping force, versus relying on static friction alone. Round Grippers can be either recess-mounted in a flat-bottom hole, or surface-mounted to use as a rest pad. When grippers are installed in a hole, they should project 50 to 100% of serration height for maximum effectiveness (.047" full serration height on grippers with .094 x 90° serrations, .062" with .125 x 90° serrations). Tapped Round Grippers are available in the six configurations shown above. Hardened tool steel grippers are the most economical and impact resistant, while carbide grippers are the most durable. These inserts can be installed directly, or used with the swivel-ball units on pages 148-150. Round Grippers are also available counterbored, for blind-hole installations (see page 147).

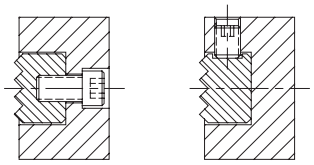

Tapped Round Grippers can be either fastened from behind with a socket-head cap screw, or clamped with a set screw on the O.D. locking flat. (Steel and Delrin® flat pads, and 1/4" dia serrated grippers, do not have a locking flat.)

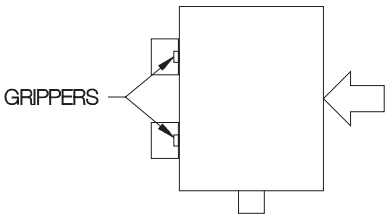

Serrated grippers installed in a fixture's locating surfaces dramatically increase resistance to movement by embedding themselves in the workpiece.

TAPPED (USA)

PART NO. TOOL STEEL (SERRATED)	PART NO. CARBIDE TIPPED (SERRATED)	PART NO. SOLID CARBIDE (SERRATED)	PART NO. CARBIDE TIPPED (FLAT)	PART NO. STEEL (FLAT)	PART NO. DELRIN (FLAT)	A DIA	B	C	D	E	F	G DIA	SERRATIONS	
CL-4-RG	—	—	—	—	—	1/4	3/8	#8-32	3/16	—	—	—	Extra Fine	.094x90°
CL-6-RG	CL-6-RGT	—	CL-6-RGFT	CL-6-RGF	CL-6-RGFN	3/8		#10-32		3/16	11/64	5/16		
CL-8-RG	CL-8-RGT	CL-8-RGC	CL-8-RGFT	CL-8-RGF	CL-8-RGFN	1/2						3/8	Fine	.125x90°
CL-10-RG	CL-10-RGT	CL-10-RGC	CL-10-RGFT	CL-10-RGF	CL-10-RGFN	5/8		1/4-28				1/2		
CL-12-RG	CL-12-RGT	CL-12-RGC	CL-12-RGFT	CL-12-RGF	CL-12-RGFN	3/4						5/8		
CL-16-RG	CL-16-RGT	—	CL-16-RGFT	CL-16-RGF	CL-16-RGFN	1						3/4		

TAPPED (METRIC)

CLM-10-RG	CLM-10-RGT	—	—	CLM-10-RGF	CLM-10-RGFN	.394 (10mm)	.3937 (10mm)	M5	.18	.185	.177	—	Xfine	.094x90°
CLM-12-RG	CLM-12-RGT	—	—	CLM-12-RGF	CLM-12-RGFN	.472 (12mm)							Fine	.125x90°
CLM-16-RG	CLM-16-RGT	—	—	CLM-16-RGF	CLM-16-RGFN	.630 (16mm)		M6						
CLM-20-RG	CLM-20-RGT	—	—	CLM-20-RGF	CLM-20-RGFN	.787 (20mm)								
CLM-25-RG	CLM-25-RGT	—	—	CLM-25-RGF	CLM-25-RGFN	.984 (25mm)								

Carr Lane®
MANUFACTURING CO.
4200 Carr Lane Ct., P.O. Box 191970
St. Louis, Missouri 63119-7970 USA
Phone: 314-647-6200, FAX: 314-647-5736
Web Site: www.carrlane.com

(Rev. 11-07)

ROUND GRIPPERS

Counterbored

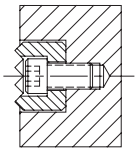

Hardened Tool Steel (Serrated)

Counterbored Round Grippers are useful whenever fastening from behind or the side is not possible. Mount with a standard socket-head cap screw.

USA

PART NO. TOOL STEEL (SERRATED)	A DIA	B	C	SERRATIONS	
CL-8-RGB	1/2	3/8	#8	Fine	.125x90°
CL-10-RGB	5/8				
CL-12-RGB	3/4	1/2	#10		
CL-16-RGB	1		1/4		

METRIC

CLM-12-RGB	.472(12mm)	.394 (10mm)	M4	Fine	.125x90°
CLM-16-RGB	.630(16mm)				
CLM-20-RGB	.787(20mm)	.472 (12mm)	M5		
CLM-25-RGB	.984(25mm)		M6		

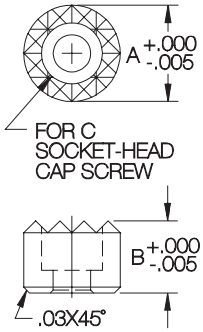

SQUARE GRIPPERS

NOW ALSO AVAILABLE IN METRIC!

SERRATED — M-2 TOOL STEEL, HEAT TREATED RC 60-62, BLACK OXIDE FINISH
SERRATED — ALLOY STEEL, HEAT TREATED, WITH BRAZED CARBIDE INSERT
SERRATED — SOLID CARBIDE

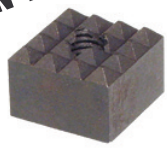

Hardened Tool Steel (Serrated)

Carbide Tipped (Serrated)

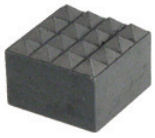

Solid Carbide (Serrated)

Tapped

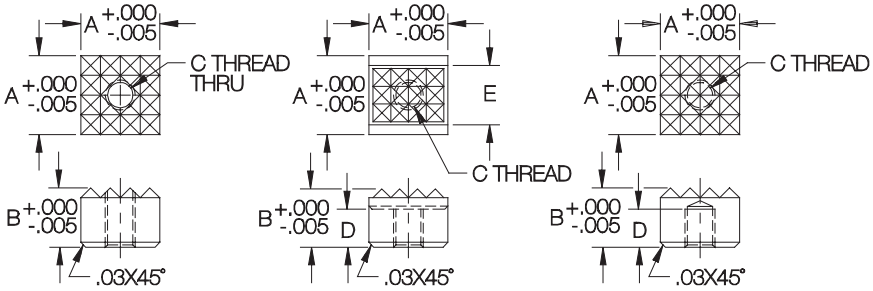

Square Grippers are similar to the Round Grippers on page 150, but are useful when positive resistance to rotation is required. These serrated grippers are hardened, replaceable inserts designed to slightly penetrate the workpiece. This significantly increases gripping force versus relying on static friction alone. Tapped Square Grippers are available in the three configurations shown above. Hardened tool steel grippers are the most economical and impact resistant, while carbide grippers are the most durable. Square Grippers are also available counterbored, for blind-hole installations (see below).

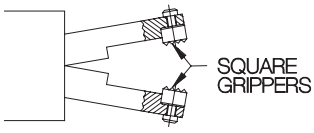

Square Grippers can be mounted against a step for positive resistance to rotation.

TAPPED (USA)

PART NO. TOOL STEEL (SERRATED)	PART NO. CARBIDE TIPPED (SERRATED)	PART NO. SOLID CARBIDE (SERRATED)	A	B	C	D	E	SERRATIONS	
CL-6-SG	—	—	3/8	3/8	#10-32	—	—	XFine	.094x90°
CL-8-SG	CL-8-SGT	CL-8-SGC	1/2			3/16	13/32	Fine	.125x90°
CL-12-SG	—	—	3/4			—	—		
CL-16-SG	—	—	1		1/4-28	—	—		

TAPPED (METRIC)

CLM-10-SG	—	—	.394(10mm)	.394 (10mm)	M5	—	—	XFine	.094x90°
CLM-12-SG	CLM-12-SGT	—	.472(12mm)			3/16	13/32	Fine	.125x90°
CLM-20-SG	—	—	.787(20mm)			—	—		
CLM-25-SG	—	—	.984(25mm)		M6	—	—		

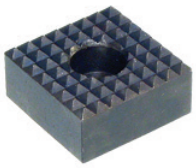

Counterbored

Hardened Tool Steel (Serrated)

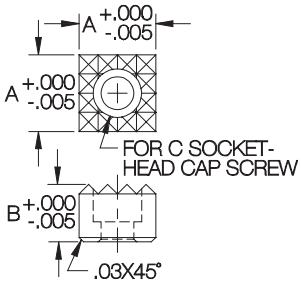

COUNTERBORED (USA)

PART NO. TOOL STEEL (SERRATED)	A	B	C	SERRATIONS	
CL-8-SGB	1/2	1/2	#10	Fine	.125x90°
CL-12-SGB	3/4		1/4		
CL-16-SGB	1				

COUNTERBORED (METRIC)

CLM-12-SGB	.472(12mm)	.472 (12mm)	M4	Fine	.125x90°
CLM-20-SGB	.787(20mm)		M5		
CLM-25-SGB	.984(25mm)				

Carr Lane MANUFACTURING CO.
4200 Carr Lane Ct., P.O. Box 191970
St. Louis, Missouri 63119-7970 USA
Phone: 314-647-6200, FAX: 314-647-5736
Web Site: www.carrlane.com

(Rev. 10-07)

EDGE GRIPPERS

M-2 TOOL STEEL, HEAT TREATED RC 60-62, BLACK OXIDE FINISH

NEW!

Serrated Hardened Tool Steel

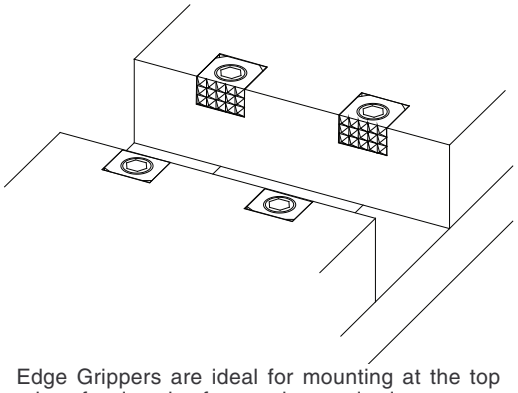

Edge Grippers are ideal for mounting at the top edge of a clamping face such as a vise jaw.

Edge Grippers are helpful for applications where traditional face-mounted grippers are difficult to install. They have a useful flat profile because the mounting screw is parallel to the serrated face. These serrated grippers are hard, replaceable inserts used to provide additional holding force and/or wear resistance when installed in a fixture. They are designed to slightly penetrate the workpiece to significantly increase gripping force, rather than relying on static friction alone. Edge Grippers should be mounted in a flat-bottom recess that provides support behind the gripper. Fasten with a standard socket-head cap screw. The serrated face should project 50 to 100% of serration height for maximum effectiveness (serration height is .062" on grippers with fine serrations, .047" on grippers with extra-fine serrations, and .031" on grippers with super-fine serrations).

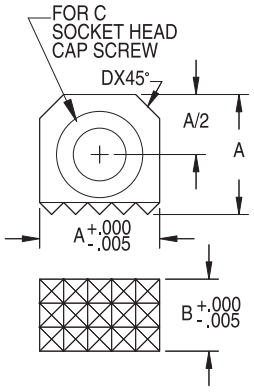

USA

PART NO.	A	B	SERRATIONS		C	COUNTER-BORE DEPTH	D
CL-6-EG-4	3/8	1/4	Extra Fine	.094x90°	#6	.146	1/16
CL-6-EG-4-SF			Super Fine	.062x90°			
CL-6-EG-6		3/8	Extra Fine	.094x90°			
CL-6-EG-6-SF			Super Fine	.062x90°			
CL-8-EG-4	1/2	1/4	Fine	.125x90°	#8	.170	3/32
CL-8-EG-4-EF			Extra Fine	.094x90°			
CL-8-EG-6		3/8	Fine	.125x90°		.175	
CL-8-EG-6-EF			Extra Fine	.094x90°			
CL-8-EG-8		1/2	Fine	.125x90°			
CL-8-EG-8-EF			Extra Fine	.094x90°			
CL-10-EG-4	5/8	1/4	Fine	.125x90°	1/4	.130	1/8
CL-10-EG-4-EF			Extra Fine	.094x90°			
CL-10-EG-6		3/8	Fine	.125x90°			
CL-10-EG-6-EF			Extra Fine	.094x90°			
CL-10-EG-8		1/2	Fine	.125x90°			
CL-10-EG-8-EF			Extra Fine	.094x90°			
CL-12-EG-4	3/4	1/4	Fine	.125x90°	5/16	.161	1/8
CL-12-EG-4-EF			Extra Fine	.094x90°			
CL-12-EG-6		3/8	Fine	.125x90°			
CL-12-EG-6-EF			Extra Fine	.094x90°			
CL-12-EG-8		1/2	Fine	.125x90°			
CL-12-EG-8-EF			Extra Fine	.094x90°			
CL-16-EG-6	1	3/8	Fine	.125x90°	3/8	.194	1/8
CL-16-EG-6-EF			Extra Fine	.094x90°			
CL-16-EG-8		1/2	Fine	.125x90°			
CL-16-EG-8-EF			Extra Fine	.094x90°			

METRIC

CLM-10-EG-6	.394(10mm)	.236(6mm)	Extra Fine	.094x90°	M3 or #6	.148	.06
CLM-10-EG-10		.394(10mm)					
CLM-12-EG-6	.472(12mm)	.236(6mm)	Fine	.125x90°	M4 or #8	.160	.09
CLM-12-EG-10		.394(10mm)					
CLM-12-EG-12		.472(12mm)					
CLM-16-EG-6	.630(16mm)	.236(6mm)	Fine	.125x90°	M6 or 1/4	.165	.13
CLM-16-EG-10		.394(10mm)					
CLM-16-EG-12		.472(12mm)					
CLM-20-EG-6	.787(20mm)	.236(6mm)	Fine	.125x90°	M8 or 5/16	.200	.13
CLM-20-EG-10		.394(10mm)					
CLM-20-EG-12		.472(12mm)					
CLM-25-EG-10	.984(25mm)	.394(10mm)	Fine	.125x90°	M10 or 3/8	.260	.13
CLM-25-EG-12		.472(12mm)					

Carr Lane®
MANUFACTURING CO.
4200 Carr Lane Ct., P.O. Box 191970
St. Louis, Missouri 63119-7970 USA
Phone: 314-647-6200, FAX: 314-647-5736
Web Site: www.carrlane.com

(Rev. 4-07)

GRIPPER CONTACT BOLTS

STEEL, CARBURIZED-HARDENED, BLACK OXIDE FINISH, WITH BRAZED CARBIDE GRIPPER

NOW ALSO AVAILABLE IN METRIC!

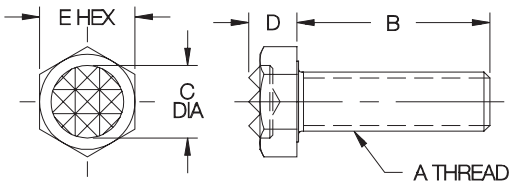

USA

PART NO.	A	B	C DIA	D	E	SERRATIONS	
CL-405-GCB	1/4-20	1/2	5/16	13/64	7/16	Extra Fine	.094x90°
CL-410-GCB		1					
CL-505-GCB	5/16-18	1/2	3/8	1/4	1/2	Fine	.125x90°
CL-510-GCB		1					
CL-515-GCB		1-1/2					
CL-605-GCB	3/8-16	1/2	1/2	9/32	9/16		
CL-610-GCB		1					
CL-615-GCB		1-1/2					
CL-810-GCB	1/2-13	1	5/8	23/64	3/4		
CL-815-GCB		1-1/2					
CL-1010-GCB	5/8-11	1	3/4	7/16	15/16		
CL-1020-GCB		2					

METRIC

CLM-612-GCB	M6	.47	5/16	.20	10mm	Extra Fine	.094x90°
CLM-625-GCB		.98					
CLM-812-GCB	M8	.47	3/8	.25	13mm	Fine	.125x90°
CLM-825-GCB		.98					
CLM-835-GCB		1.38					
CLM-1012-GCB	M10	.47	1/2	.33	17mm		
CLM-1025-GCB		.98					
CLM-1040-GCB		1.57					
CLM-1225-GCB	M12	.98	5/8	.34	19mm		
CLM-1240-GCB		1.57					
CLM-1635-GCB	M16	1.38	3/4	.43	24mm		
CLM-1650-GCB		1.97					

Carbide Tipped (Serrated)

Fully threaded contact bolt with a carbide-tipped gripper head. Can be used as an adjustable support, or as a contact bolt in a clamp. Available in thread sizes from 1/4-20 to 5/8-11 (M6 to M16 in metric) each in a choice of lengths.

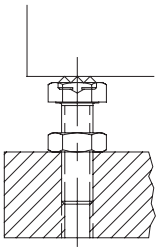

GRIPPER SWIVEL SCREWS

BODY: STEEL, CARBURIZED-HARDENED, BLACK OXIDE FINISH
SWIVEL BALL: HIGH-SPEED TOOL STEEL

NOW ALSO AVAILABLE IN METRIC!

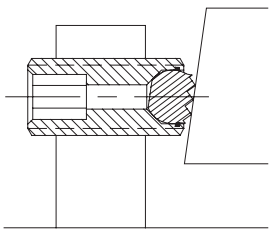

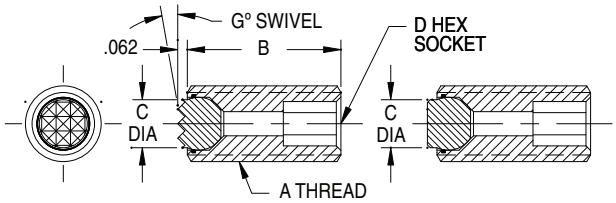

Hardened Tool Steel (Serrated)

Hardened Tool Steel (Flat)

Screw clamp with a hardened tool steel swivel ball, either serrated or flat. A positive stop prevents the ball from swiveling too far. Serrated grippers are designed to slightly penetrate the workpiece to significantly increase gripping force, rather than relying on static friction alone. Available in thread sizes from 3/8-16 to 5/8-11 (M10 to M16 in metric) each in a choice of several lengths.

COMPLETE ASSEMBLY (USA)

PART NO. — COMPLETE								
TOOL STEEL (SERRATED)	TOOL STEEL (FLAT)	A	B	C DIA	D	G	SERRATIONS	
CL-605-GSS	CL-605-GSF	3/8-16	1/2	5/32	3/16	14°	Super Fine	.062x90°
CL-610-GSS	CL-610-GSF		1					
CL-620-GSS	CL-620-GSF		2					
CL-810-GSS	CL-810-GSF	1/2-13	1	1/4	1/4			
CL-820-GSS	CL-820-GSF		2					
CL-830-GSS	CL-830-GSF		3					
CL-1010-GSS	CL-1010-GSF	5/8-11	1	5/16	5/16		Extra Fine	.094x90°
CL-1020-GSS	CL-1020-GSF		2					
CL-1030-GSS	CL-1030-GSF		3					

COMPLETE ASSEMBLY (METRIC)

CLM-1025-GSS	CLM-1025-GSF	M10	.98	.16	5mm	15°	Super Fine	.062x90°
CLM-1050-GSS	CLM-1050-GSF		1.97					
CLM-1225-GSS	CLM-1225-GSF	M12	.98	.24	6mm	14°		
CLM-1250-GSS	CLM-1250-GSF		1.97					
CLM-1625-GSS	CLM-1625-GSF	M16	.98	.33	8mm	12°	Extra Fine	.094x90°
CLM-1650-GSS	CLM-1650-GSF		1.97					

Carr Lane®
MANUFACTURING CO.
4200 Carr Lane Ct., P.O. Box 191970
St. Louis, Missouri 63119-7970 USA
Phone: 314-647-6200, FAX: 314-647-5736
Web Site: www.carrlane.com

(Rev. 4-07)

GRIPPER SWIVEL CONTACT BOLTS

BODY AND GRIPPER SCREW: STEEL, CARBURIZED-HARDENED, BLACK OXIDE FINISH
SWIVEL BALL: 440C STAINLESS STEEL, HEAT TREATED. O-RING: RUBBER
SEE PAGE 150 FOR ROUND GRIPPER MATERIAL SPECIFICATIONS

NOW ALSO AVAILABLE IN METRIC!

Hardened Tool Steel (Serrated)

Carbide Tipped (Serrated)

Solid Carbide (Serrated)

Carbide Tipped (Flat)

Hardened Steel (Flat)

Delrin® (Flat)

Threaded contact bolt with a built-in swivel ball to hold a Round Gripper. This swivel ball, held by a retaining ring, is removable to allow installing any of the six different gripper types (order gripper separately). A fastening screw is furnished with the contact bolt. This screw serves as a positive stop to prevent the ball from swiveling too far. Can be used as a contact bolt, or as a support. Available in thread sizes from 3/8-16 to 1"-8 (M10 to M24 in metric), most in a choice of several lengths.

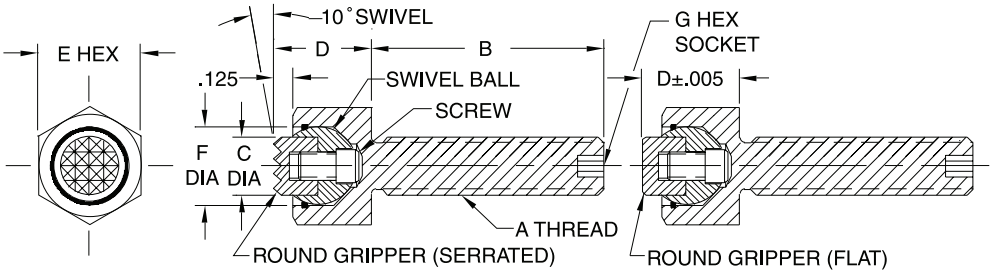

BODY AND GRIPPER — ORDER SEPARATELY (USA)

PART NO. BODY WITHOUT GRIPPER	PART NO. — ROUND GRIPPER						A	B	C DIA	D	E	F DIA	G	SERRATIONS	
	TOOL STEEL (SERRATED)	CARBIDE TIPPED (SERRATED)	SOLID CARBIDE (SERRATED)	CARBIDE TIPPED (FLAT)	STEEL (FLAT)	DELRIN (FLAT)									
CL-605-GSB	CL-6-RG	CL-6-RGT	—	CL-6-RGFT	CL-6-RGF	CL-6-RGFN	3/8-16	1/2	3/8	5/8	5/8	1/2	1/8	Extra Fine	.094x90°
CL-610-GSB								1							
CL-615-GSB								1-1/2							
CL-810-GSB	CL-8-RG	CL-8-RGT	CL-8-RGC	CL-8-RGFT	CL-8-RGF	CL-8-RGFN	1/2-13	1	1/2	3/4	13/16	5/8	3/16	Fine	.125x90°
CL-815-GSB								1-1/2							
CL-1010-GSB	CL-10-RG	CL-10-RGT	CL-10-RGC	CL-10-RGFT	CL-10-RGF	CL-10-RGFN	5/8-11	1	5/8	13/16	15/16	3/4	1/4		
CL-1020-GSB								2							
CL-1210-GSB	CL-12-RG	CL-12-RGT	CL-12-RGC	CL-12-RGFT	CL-12-RGF	CL-12-RGFN	3/4-10	1	3/4	7/8	1-1/8	7/8	5/16		
CL-1225-GSB								2-1/2							
CL-1620-GSB	CL-16-RG	CL-16-RGT	—	CL-16-RGFT	CL-16-RGF	CL-16-RGFN	1-8	2	1	1	1-1/2	1-1/8	3/8		

BODY AND GRIPPER — ORDER SEPARATELY (METRIC)

CLM-1015-GSB	CLM-10-RG	CLM-10-RGT	—	—	CLM-10-RGF	CLM-10-RGFN	M10	.59	.394	.669	17mm	.51	3mm	Extra Fine	.094x90°
CLM-1030-GSB								1.18							
CLM-1220-GSB	CLM-12-RG	CLM-12-RGT	—	—	CLM-12-RGF	CLM-12-RGFN	M12	.79	.472	.748	19mm	.59	5mm	Fine	.125x90°
CLM-1240-GSB								1.57							
CLM-1625-GSB	CLM-16-RG	CLM-16-RGT	—	—	CLM-16-RGF	CLM-16-RGFN	M16	.98	.630	.906	24mm	.79	6mm		
CLM-1650-GSB								1.97							
CLM-2030-GSB	CLM-20-RG	CLM-20-RGT	—	—	CLM-20-RGF	CLM-20-RGFN	M20	1.18	.787	.945	30mm	.91	8mm		
CLM-2060-GSB								2.36							
CLM-2440-GSB	CLM-25-RG	CLM-25-RGT	—	—	CLM-25-RGF	CLM-25-RGFN	M25	1.57	.984	1.181	36mm	1.10	10mm		

Carr Lane® MANUFACTURING CO.
4200 Carr Lane Ct., P.O. Box 191970
St. Louis, Missouri 63119-7970 USA
Phone: 314-647-6200, FAX: 314-647-5736
Web Site: www.carrlane.com

(Rev. 4-07)

GRIPPER SWIVEL CONTACT BOLTS

BODY AND GRIPPER SCREW: STEEL, CARBURIZED-HARDENED, BLACK OXIDE FINISH
SWIVEL BALL: 440C STAINLESS STEEL, HEAT TREATED (H.S. TOOL STEEL ON SMALL SIZES). O-RING: RUBBER
SEE PAGE 150 FOR ROUND GRIPPER MATERIAL SPECIFICATIONS

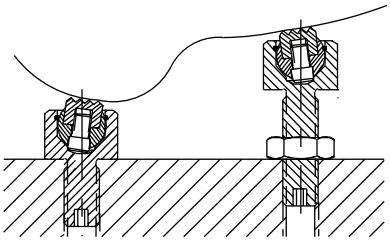

Gripper Swivel Contact Bolts are ideal as either fixed or adjustable supports under workpieces with curved or sloped surfaces.

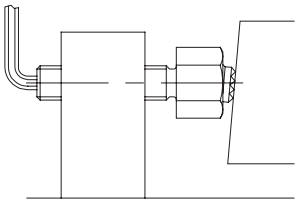

Gripper Swivel Contact Bolts can also be used as screw clamps by turning them with a hex wrench (large sizes only).

Hardened Tool Steel (Serrated)

Hardened Steel (Flat)

Delrin® (Flat)

Mini Sizes

Mini threaded contact bolt with a built-in swivel ball held by a retaining ring. Choose from the three gripper types shown, serrated or flat. The gripper face is machined directly on the swivel ball. A positive stop prevents the ball from swiveling too far. Can be used as a contact bolt, or as a support. Available in thread sizes from #10-32 to 5/16-18 (M6 to M8 in metric), most in a choice of several lengths.

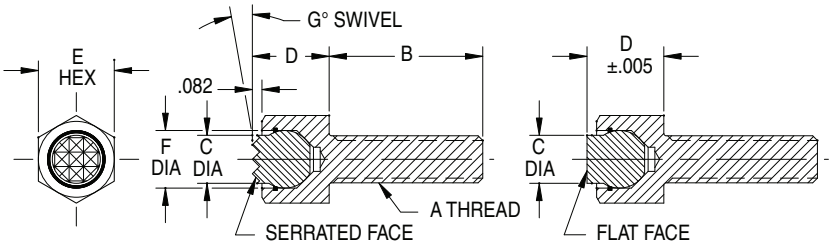

MINI — COMPLETE ASSEMBLY (USA)

PART NO. — COMPLETE											
TOOL STEEL (SERRATED)	STEEL (FLAT)	DELRIN® (FLAT)	A	B	C DIA	D	E	F DIA	G	SERRATIONS	
CL-305-GSB	CL-305-GBF	CL-305-GBFN	#10-32	1/2	5/32	5/16	3/8	3/16	14°	Super Fine	.062x90°
CL-405-GSB	CL-405-GBF	CL-405-GBFN	1/4-20	1/2	1/4	3/8	7/16	7/32			
CL-410-GSB	CL-410-GBF	CL-410-GBFN		1							
CL-415-GSB	CL-415-GBF	CL-415-GBFN		1-1/2							
CL-505-GSB	CL-505-GBF	CL-505-GBFN	5/16-18	1/2	5/16	7/16	1/2	3/8		Extra Fine	.094x90°
CL-510-GSB	CL-510-GBF	CL-510-GBFN		1							
CL-515-GSB	CL-515-GBF	CL-515-GBFN		1-1/2							

NOW ALSO AVAILABLE IN METRIC!

MINI — COMPLETE ASSEMBLY (METRIC)

CLM-612-GSB	CLM-612-GSF	CLM-612-GSFN	M6	.47	.24	.374	10mm	.28	14°	Super Fine	.062x90°
CLM-625-GSB	CLM-625-GSF	CLM-625-GSFN		.98							
CLM-640-GSB	CLM-640-GSF	CLM-640-GSFN		1.57							
CLM-812-GSB	CLM-812-GSF	CLM-812-GSFN	M8	.47	.33	.512	13mm	.39	12°	Extra Fine	.094x90°
CLM-825-GSB	CLM-825-GSF	CLM-825-GSFN		.98							
CLM-840-GSB	CLM-840-GSF	CLM-840-GSFN		1.57							

Carr Lane®
MANUFACTURING CO.
4200 Carr Lane Ct., P.O. Box 191970
St. Louis, Missouri 63119-7970 USA
Phone: 314-647-6200, FAX: 314-647-5736
Web Site: www.carrlane.com

(Rev. 4-07)

GRIPPER SWIVEL PADS

BODY AND GRIPPER SCREW: STEEL, CARBURIZED-HARDENED, BLACK OXIDE FINISH. O-RING: RUBBER.
SWIVEL BALL ON STANDARD SIZES: 440C STAINLESS STEEL, HEAT TREATED
SEE PAGE 150 FOR ROUND GRIPPER MATERIAL SPECIFICATIONS
SWIVEL BALL ON MINI SIZES: HARDENED M-2 TOOL STEEL, HARDENED ALLOY STEEL, OR DELRIN®

NOW ALSO AVAILABLE IN METRIC!

Hardened Tool Steel (Serrated)

Carbide Tipped (Serrated)

Solid Carbide (Serrated)

Carbide Tipped (Flat)

Hardened Steel (Flat)

Delrin® (Flat)

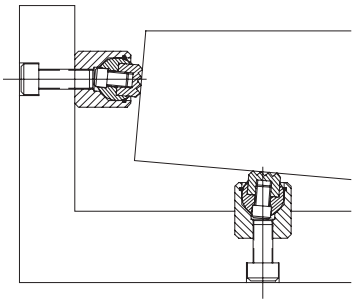

Rest pad with a built-in swivel ball held by a retaining ring. A positive stop prevents the ball from swiveling too far. The swivel ball is removable to allow installing any of five different Round-Gripper types (order separately). Simply insert a hex wrench or rod to push the ball out from behind. Gripper Swivel Pads are available in a wide range of sizes. They can be surface-mounted or installed in a counterbored hole.

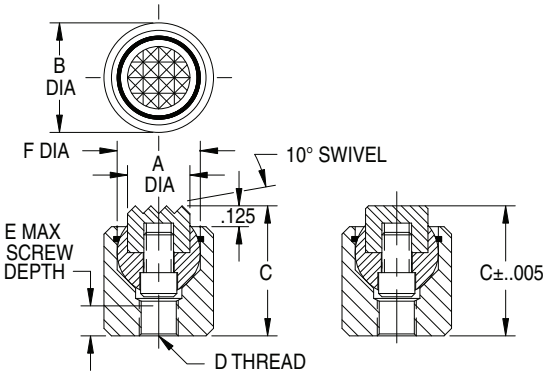

BODY AND GRIPPER — ORDER SEPARATELY (USA)

PART NO. BODY WITHOUT GRIPPER	PART NO. — ROUND GRIPPER						A DIA	B DIA	C	D	E	F DIA	SERRATIONS	
	TOOL STEEL (SERRATED)	CARBIDE TIPPED (SERRATED)	SOLID CARBIDE (SERRATED)	CARBIDE TIPPED (FLAT)	STEEL (FLAT)	DELRIN® (FLAT)								
CL-6-GSP	CL-6-RG	CL-6-RGT	—	CL-6-RGFT	CL-6-RGF	CL-6-RGFN	3/8	5/8	7/8	1/4-28	.24	1/2	XFine	.094x90°
CL-8-GSP	CL-8-RG	CL-8-RGT	CL-8-RGC	CL-8-RGFT	CL-8-RGF	CL-8-RGFN	1/2	13/16	1	5/16-24	.35	5/8	Fine	.125x90°
CL-10-GSP	CL-10-RG	CL-10-RGT	CL-10-RGC	CL-10-RGFT	CL-10-RGF	CL-10-RGFN	5/8	15/16	1	3/8-24	.28	3/4		
CL-12-GSP	CL-12-RG	CL-12-RGT	CL-12-RGC	CL-12-RGFT	CL-12-RGF	CL-12-RGFN	3/4	1-1/8	1-1/16	1/2-20	.25	7/8		
CL-16-GSP	CL-16-RG	CL-16-RGT	—	CL-16-RGFT	CL-16-RGF	CL-16-RGFN	1	1-1/2	1-3/8		.44	1-1/8		

BODY AND GRIPPER — ORDER SEPARATELY (METRIC)

CLM-10-GSP	CLM-10-RG	CLM-10-RGT	—	—	CLM-10-RGF	CLM-10-RGFN	10mm	.67	.866	M6	.29	.512	XFine	.094x90°
CLM-12-GSP	CLM-12-RG	CLM-12-RGT	—	—	CLM-12-RGF	CLM-12-RGFN	12mm	.75	.945	M8	.33	.591	Fine	.125x90°
CLM-16-GSP	CLM-16-RG	CLM-16-RGT	—	—	CLM-16-RGF	CLM-16-RGFN	16mm	.94	1.102	M10	.35	.787		
CLM-20-GSP	CLM-20-RG	CLM-20-RGT	—	—	CLM-20-RGF	CLM-20-RGFN	20mm	1.18	1.181	M12	.33	.906		
CLM-25-GSP	CLM-25-RG	CLM-25-RGT	—	—	CLM-25-RGF	CLM-25-RGFN	25mm	1.42	1.417	M12	.47	1.102		

NEW MINI SIZES!

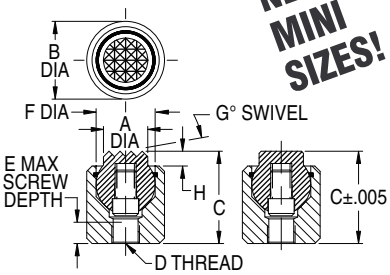

Mini-size rest pad with a built-in swivel ball. Gripper face is machined directly on the swivel ball.

COMPLETE ASSEMBLY — MINI (USA)

PART NO. — COMPLETE			A DIA	B DIA	C	D	E	F BALL DIA	G	H	SERRATIONS	
TOOL STEEL (SERRATED)	STEEL (FLAT)	DELRIN® (FLAT)										
CL-3-GSPS	CL-3-GSPF	CL-3-GSPN	5/32	3/8	3/8	#4-40	1/4	3/16	14°	.062	Super Fine	.062x90°
CL-4-GSPS	CL-4-GSPF	CL-4-GSPN	1/4	7/16	7/16	#8-32	5/32	9/32	14°	.062		
CL-5-GSPS	CL-5-GSPF	CL-5-GSPN	5/16	1/2	9/16	#10-32	5/32	3/8	14°	.062	Extra Fine	.094x90°
CL-6-GSPS	CL-6-GSPF	CL-6-GSPN	3/8	5/8	15/16	1/4-28	1/4	1/2	17°	.125		

COMPLETE ASSEMBLY — MINI (METRIC)

CLM-6-GSPS	CLM-6-GSPF	CLM-6-GSPN	.24	.39	.472	M4	.14	.276	14°	.059	SFine	.062x90°
CLM-8-GSPS	CLM-8-GSPF	CLM-8-GSPN	.33	.51	.630	M5	.25	.394	12°	.059	Extra Fine	.094x90°
CLM-10-GSPS	CLM-10-GSPF	CLM-10-GSPN	.39	.67	.768	M6	.27	.512	21°	.059		

Carr Lane®
MANUFACTURING CO.
4200 Carr Lane Ct., P.O. Box 191970
St. Louis, Missouri 63119-7970 USA
Phone: 314-647-6200, FAX: 314-647-5736
Web Site: www.carrlane.com

(Rev. 10-07)

SWIVEL CONTACT BOLTS

BALL: CHROME STEEL, HEAT TREATED RC 60-67
BODY: 1144 STEEL, HEAT TREATED RC 35-40, BLACK OXIDE FINISH

Precision swivel ball that can be used as either a contact bolt or rest pad.

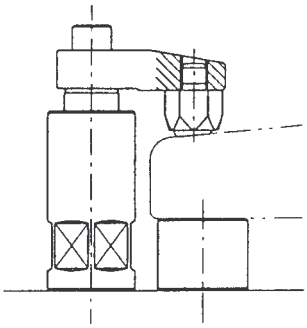

Swivel Contact Bolts are ideal for evenly distributing clamping pressure on sloped surfaces.

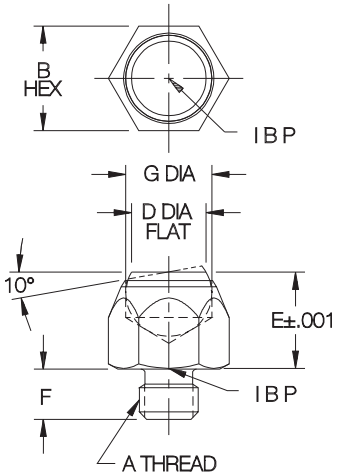

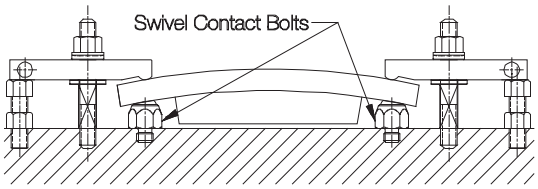

Swivel Contact Bolts are precision ground for accurate height location, even on sloped surfaces. See pages 35-38MF for Riser Blocks, Extension Supports, and Height Shims.

PART NO.	A	B	D DIA	E NOMINAL	E ACTUAL	F	G
CL-MF25-2502	5/16-18	9/16	13/32	1/2	.5000	.32	15/32
CL-MF30-2503	3/8-16	13/16	19/32	13/16	.8125	.47	23/32
CL-MF40-2501	1/2-13	7/8	5/8	13/16	.8125	.41	23/32
CL-MF50-2501	5/8-11	1-1/16	13/16	1	1.0000	.61	29/32

SPHERICAL RADIUS LOCATOR BUTTONS

1144 STEEL, HEAT TREATED RC 40-45, BLACK OXIDE FINISH

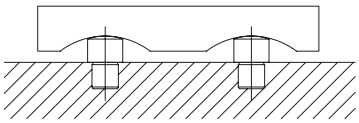

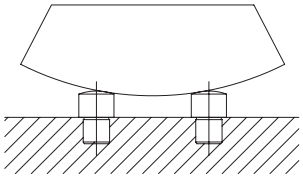

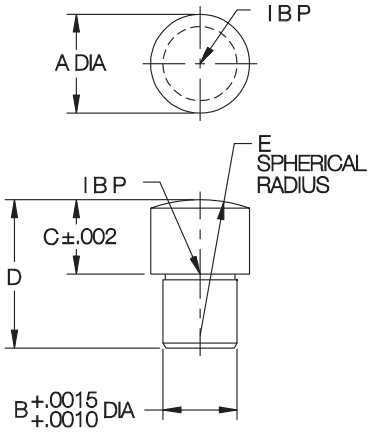

Rest button with a spherical-radius head to minimize workpiece contact area. Press-fit shank.

PART NO.	B DIA	A DIA	C	D	E
CL-1-SLB	3/16	5/16	.1250	3/8	1/2
CL-2-SLB	1/4	3/8	.1875	1/2	5/8
CL-3-SLB	3/8	1/2	.1875	9/16	3/4
CL-4-SLB			.2500	5/8	
CL-5-SLB			.3750	3/4	
CL-6-SLB			.5000	7/8	

CarrLane® MANUFACTURING CO.
4200 Carr Lane Ct., P.O. Box 191970
St. Louis, Missouri 63119-7970 USA
Phone: 314-647-6200, FAX: 314-647-5736
Web Site: www.carrlane.com

(Rev. 10-07)

REST BUTTONS

STEEL: 1144, HEAT TREATED RC 40-45 BLACK OXIDE FINISH
STAINLESS STEEL: 300-SERIES

Precision rest button with a press-fit shank. Excellent as either a workpiece support or a jig foot.

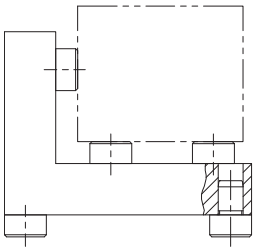

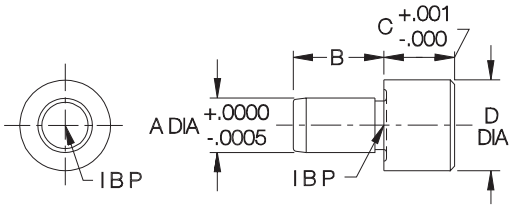

STEEL (USA)

PART NO.	A DIA NOMINAL	A DIA ACTUAL	B	C NOMINAL	C ACTUAL	D DIA
CL-12-RB	3/16	.1885	3/8	1/4	.2500	3/8
CL-13-RB				3/8	.3750	
CL-14-RB				1/2	.5000	
CL-2-RB	1/4	.2510	1/2	1/4	.2500	1/2
CL-3-RB				3/8	.3750	
CL-1-RB				1/2	.5000	
CL-5-RB	3/8	.3760	5/8	1/4	.2500	5/8
CL-6-RB				3/8	.3750	
CL-4-RB				1/2	.5000	
CL-7-RB				5/8	.6250	
CL-8-RB				3/4	.7500	
CL-15-RB	1/2	.5010	5/8	3/8	.3750	7/8
CL-9-RB				1/2	.5000	
CL-16-RB				5/8	.6250	
CL-17-RB	5/8	.6260	3/4	3/8	.3750	1
CL-10-RB				1/2	.5000	
CL-18-RB				3/4	.7500	
CL-19-RB	3/4	.7515	7/8	1/2	.5000	1-1/4
CL-11-RB				5/8	.6250	

STAINLESS STEEL (USA)

PART NO.	A DIA NOMINAL	A DIA ACTUAL	B	C NOMINAL	C ACTUAL	D DIA
CL-26432	3/16	.1885	1/4	1/4	.2500	3/8
CL-26433				3/8	.3750	
CL-26434				1/2	.5000	
CL-26542	1/4	.2510	5/16	1/4	.2500	1/2
CL-26646	5/16	.3135	5/16	3/4	.7500	1/2

STEEL (METRIC)

CLM-605-RB	6mm	.2372	.31	5mm	.1969	.39
CLM-610-RB				10mm	.3937	
CLM-805-RB	8mm	.3160	.39	5mm	.1969	.63
CLM-810-RB				10mm	.3937	
CLM-815-RB				15mm	.5906	
CLM-820-RB				20mm	.7874	
CLM-1010-RB	10mm	.3947	.47	10mm	.3937	.79
CLM-1015-RB				15mm	.5906	
CLM-1020-RB				20mm	.7874	

JIG REST BUTTONS

12L14 STEEL, CARBURIZED-HARDENED, BLACK OXIDE FINISH

Precision rest button mounted with a socket-head cap screw (not furnished). Excellent as either a workpiece support or a jig foot.

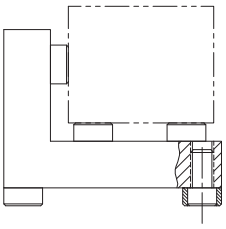

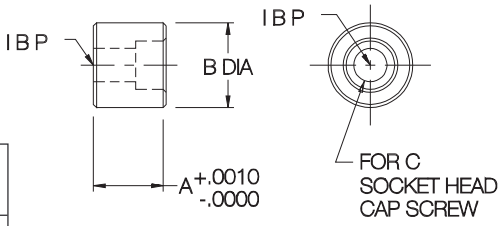

USA

PART NO.	B DIA	A NOMINAL	A ACTUAL	C
CL-24-JRB	1/2	1/8	.1250	#8 Flat Head*
CL-00-JRB		3/8	.3750	#10
CL-0-JRB		1/2	.5000	
CL-12-JRB	5/8	1/4	.2500	#10 Flat Head*
CL-13-JRB		3/8	.3750	1/4
CL-1-JRB		1/2	.5000	
CL-14-JRB		5/8	.6250	
CL-2-JRB		3/4	.7500	
CL-16-JRB		1	1.0000	
CL-17-JRB	7/8	3/8	.3750	1/4
CL-18-JRB		1/2	.5000	5/16
CL-3-JRB		5/8	.6250	
CL-19-JRB		3/4	.7500	
CL-20-JRB		1	1.0000	
CL-25-JRB	1-1/4	1/2	.5000	3/8
CL-21-JRB		3/4	.7500	
CL-6-JRB		1	1.0000	
CL-7-JRB		1-1/2	1.5000	
CL-8-JRB		2	2.0000	

* Flat-head screw these sizes only.

METRIC

PART NO.	B DIA	A NOMINAL	A ACTUAL	C
CLM-1-JRB	.63	10mm	.3937	M5
CLM-2A-JRB		15mm	.5906	
CLM-4-JRB	.79	10mm	.3937	M6
CLM-6A-JRB		15mm	.5906	
CLM-7A-JRB		20mm	.7874	
CLM-8-JRB		25mm	.9843	
CLM-11A-JRB	.98	15mm	.5906	M8
CLM-12A-JRB		20mm	.7874	
CLM-13-JRB		25mm	.9843	
CLM-14A-JRB	1.26	20mm	.7874	M10
CLM-15-JRB		25mm	.9843	
CLM-16A-JRB		30mm	1.1811	
CLM-17A-JRB		50mm	1.9685	

Carr Lane MANUFACTURING CO.
4200 Carr Lane Ct., P.O. Box 191970
St. Louis, Missouri 63119-7970 USA
Phone: 314-647-6200, FAX: 314-647-5736
Web Site: www.carrlane.com

(Rev. 7-08)

SCREW REST PADS

12L14 STEEL, CARBURIZED-HARDENED, BLACK OXIDE FINISH

NOW ALSO AVAILABLE IN METRIC!

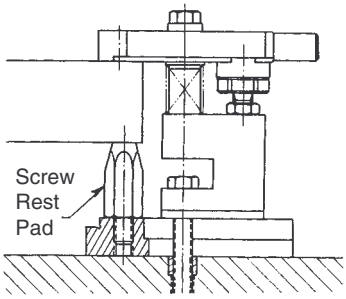

Precision height locator with a small contact area. Excellent as either a workpiece support or a jig foot. Available in a wide range of heights.

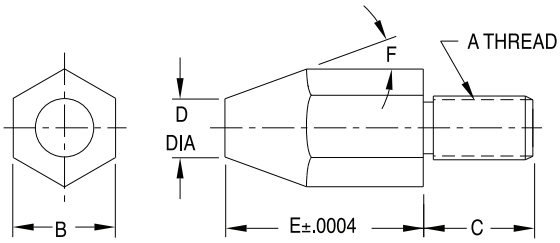

USA

PART NO.	A	B	C	D DIA	E	F
CL-MF25-4801	5/16-18	3/4	5/8	5/16	.2500	75°
CL-MF25-4802					.3750	60°
CL-MF25-4803					.5000	35°
CL-MF25-4804					.7500	25°
CL-MF25-4805					1.0000	20°
CL-MF25-4806					1.2500	15°
CL-MF25-4807					1.5000	
CL-MF40-4801	1/2-13	7/8	15/16	1/2	.2500	75°
CL-MF40-4802					.3750	60°
CL-MF40-4803					.5000	35°
CL-MF40-4804					.7500	25°
CL-MF40-4805					1.0000	20°
CL-MF40-4806					1.2500	15°
CL-MF40-4807					1.5000	
CL-MF40-4808					2.0000	
CL-MF50-4801	5/8-11	1	1-1/4	5/8	.2500	75°
CL-MF50-4802					.3750	60°
CL-MF50-4803					.5000	35°
CL-MF50-4804					.7500	25°
CL-MF50-4805					1.0000	20°
CL-MF50-4806					1.2500	15°
CL-MF50-4807					1.5000	
CL-MF50-4808					2.0000	

METRIC

PART NO.	A	B	C	D DIA	E	F
CL-MF08-4801	M8	17mm	.63	.31	.1969 (5mm)	75°
CL-MF08-4802					.3937 (10mm)	60°
CL-MF08-4803					.5906 (15mm)	35°
CL-MF08-4804					.7874 (20mm)	25°
CL-MF08-4805					.9843 (25mm)	20°
CL-MF08-4806					1.1811 (30mm)	15°
CL-MF08-4808					1.5748 (40mm)	
CL-MF12-4801	M12	19mm	.94	.47	.1969 (5mm)	75°
CL-MF12-4802					.3937 (10mm)	60°
CL-MF12-4803					.5906 (15mm)	35°
CL-MF12-4804					.7874 (20mm)	25°
CL-MF12-4805					.9843 (25mm)	20°
CL-MF12-4806					1.1811 (30mm)	15°
CL-MF12-4808					1.5748 (40mm)	
CL-MF12-4810					1.9685 (50mm)	
CL-MF16-4802	M16	24mm	1.26	.63	.3937 (10mm)	60°
CL-MF16-4803					.5906 (15mm)	35°
CL-MF16-4804					.7874 (20mm)	25°
CL-MF16-4805					.9843 (25mm)	20°
CL-MF16-4806					1.1811 (30mm)	15°
CL-MF16-4808					1.5748 (40mm)	
CL-MF16-4810					1.9685 (50mm)	

SCREW REST BUTTONS

12L14 STEEL, CARBURIZED-HARDENED, BLACK OXIDE FINISH

Threaded rest button left unground, with .005 to .010 extra stock, for grinding after installation.

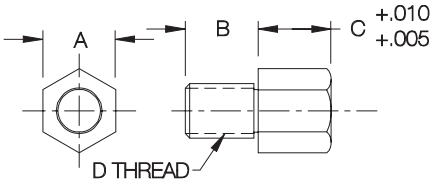

USA

PART NO.	A	B	C NOMINAL	C ACTUAL	D
CL-1-SRB	3/8	3/8	1/4	.2500	1/4-20
CL-2-SRB			3/8	.3750	
CL-3-SRB			1/2	.5000	
CL-4-SRB			3/4	.7500	
CL-5-SRB			1	1.0000	
CL-6-SRB	1/2	1/2	1/4	.2500	3/8-16
CL-7-SRB			3/8	.3750	
CL-8-SRB			1/2	.5000	
CL-9-SRB			3/4	.7500	
CL-10-SRB			1	1.0000	
CL-11-SRB	5/8	5/8	1/4	.2500	1/2-13
CL-12-SRB			3/8	.3750	
CL-13-SRB			1/2	.5000	
CL-14-SRB			5/8	.6250	
CL-15-SRB			3/4	.7500	
CL-16-SRB			1	1.0000	

METRIC

PART NO.	A	B	C NOMINAL	C ACTUAL	D
CLM-605-SRB	10mm	.39	5mm	.1969	M6
CLM-610-SRB			10mm	.3937	
CLM-615-SRB			15mm	.5906	
CLM-620-SRB			20mm	.7874	
CLM-625-SRB			25mm	.9843	
CLM-1005-SRB	13mm	.51	5mm	.1969	M10
CLM-1010-SRB			10mm	.3937	
CLM-1015-SRB			15mm	.5906	
CLM-1020-SRB			20mm	.7874	
CLM-1025-SRB			25mm	.9843	
CLM-1205-SRB	17mm	.63	5mm	.1969	M12
CLM-1210-SRB			10mm	.3937	
CLM-1215-SRB			15mm	.5906	
CLM-1220-SRB			20mm	.7874	
CLM-1225-SRB			25mm	.9843	

Carr Lane®
MANUFACTURING CO.
4200 Carr Lane Ct., P.O. Box 191970
St. Louis, Missouri 63119-7970 USA
Phone: 314-647-6200, FAX: 314-647-5736
Web Site: www.carrlane.com

(Rev. 12-07)

DRILL JIG FEET

12L14 STEEL, CARBURIZED-HARDENED, BLACK OXIDE FINISH

Precision jig foot available in four heights. Dowel in place to prevent rotation.

PART NO.	A
CL-1-DJF	.5000
CL-2-DJF	1.0000
CL-3-DJF	2.0000
CL-4-DJF	3.0000

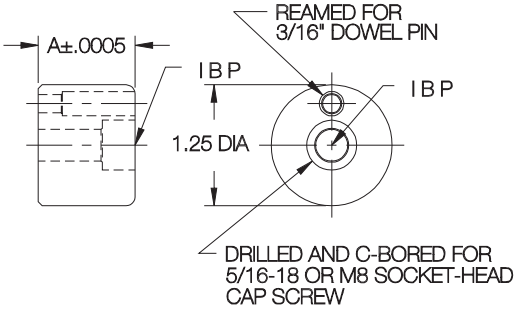

DOUBLE-END JIG FEET

12L14 STEEL, CARBURIZED-HARDENED, BLACK OXIDE FINISH

Tapped jig foot commonly used in pairs with a stud.

USA

PART NO.	THREAD SIZE	A	B	C
CL-1-DEJF	5/8-11	1.000	5/8	1
CL-3-DEJF		1.500	1	
CL-4-DEJF		1.750	1-1/4	
CL-5-DEJF		2.000	1-1/2	
CL-6-DEJF		2.500		
CL-7-DEJF		3.000		
CL-8-DEJF		3.500		
CL-9-DEJF		4.000		
CL-10-DEJF		6.000		
CL-11-DEJF		8.000		

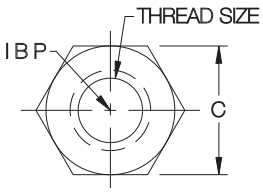

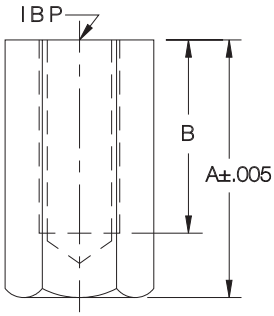

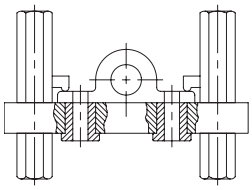

METRIC

CLM-30-DEJF	M16	1.181 (30mm)	.63	24mm
CLM-40-DEJF		1.575 (40mm)	.98	
CLM-50-DEJF		1.969 (50mm)	1.50	
CLM-75-DEJF		2.953 (75mm)		
CLM-100-DEJF		3.937 (100mm)		

Carr Lane®
MANUFACTURING CO.
4200 Carr Lane Ct., P.O. Box 191970
St. Louis, Missouri 63119-7970 USA
Phone: 314-647-6200, FAX: 314-647-5736
Web Site: www.carrlane.com

(Rev. 10-07)

JIG LEG PLATES

1020 STEEL, CARBURIZED-HARDENED, BLACK OXIDE FINISH

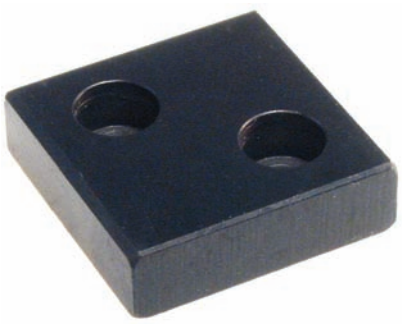

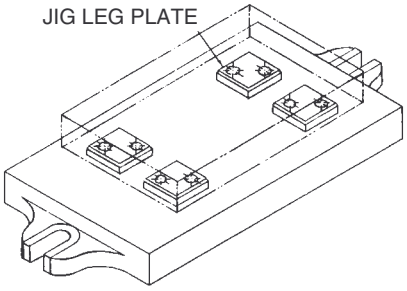

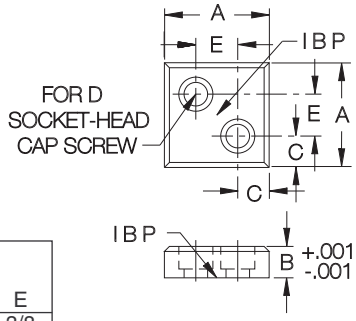

Precision ground pad with a large contact area. Can be used either as a jig foot, or as a rest pad for heavy workpieces. Choice of three sizes.

PART NO.	A	B	C	D	E
CL-1-JLP	1	.3125	5/16	#10-32 OR M5	3/8
CL-2-JLP	1-1/4	.3750	3/8	1/4-20 OR M6	1/2
CL-3-JLP	1-1/2	.4375	7/16		5/8

HEAVY-DUTY REST PADS

1018 STEEL, CARBURIZED-HARDENED, BLACK OXIDE FINISH

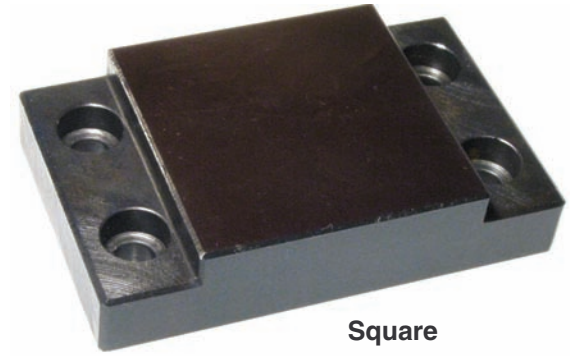

Square

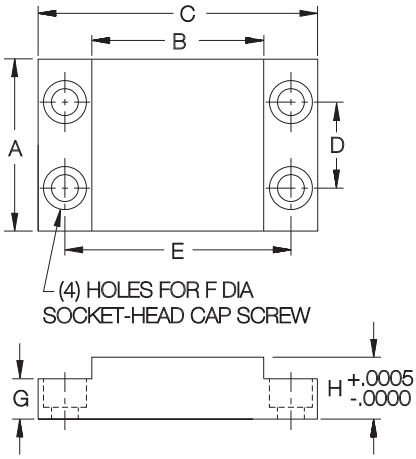

Square

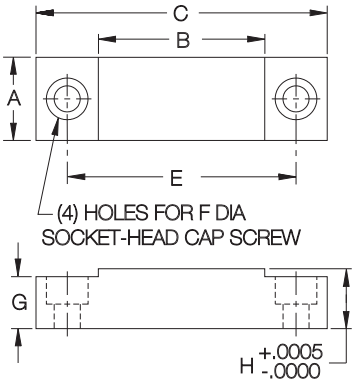

Rectangular

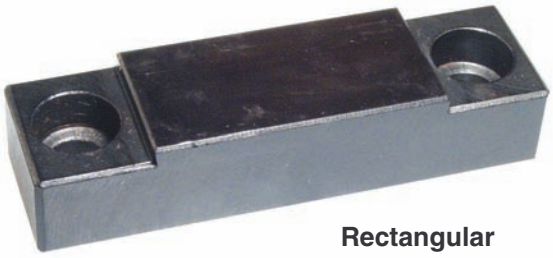

Rectangular

Large, precision rest pad for heavy-duty applications. These hardened pads have a large, durable contact surface to support heavy workpieces, or to serve as wear plates. Choice of four sizes.

SQUARE

PART NO.	A	B	C	D	E	F	G	H
CL-1-HDRP	2	2	3-1/4	1	2-1/2	1/4-20 OR M6	1/2	.7500

RECTANGULAR

CL-2-HDRP	1	2	3-1/2	—	2-3/4	5/16-18 OR M8	5/8	.7500
CL-3-HDRP		3	4-1/2		3-3/4			
CL-4-HDRP		4	5-1/2		4-3/4			

CarrLane®
MANUFACTURING CO.
4200 Carr Lane Ct., P.O. Box 191970
St. Louis, Missouri 63119-7970 USA
Phone: 314-647-6200, FAX: 314-647-5736
Web Site: www.carrlane.com

(Rev. 4-08)

MANUAL WORK SUPPORTS

BODY & PLUNGER: CARBON STEEL, CASE HARDENED, BLACK OXIDE FINISH
HANDLE: ZINC DIE CASTING, ENAMEL PAINT

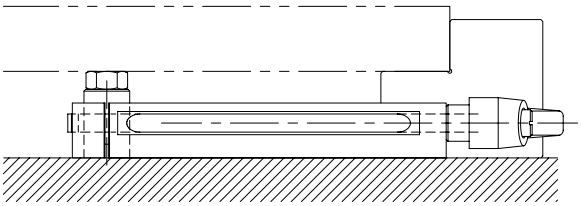

Low profile allows reaching far underneath low workpieces.

Spring-extended work support with an extremely low profile. Ideal for supporting in hard-to-reach places, because the handle can be positioned for convenient access. Turning the handle counterclockwise unlocks the plunger, allowing the plunger to float. Turning the handle clockwise locks the plunger .If desired, the plunger can be locked in retracted position before loading, for easier loading of light parts. The zinc die-cast Adjustable Handle can be reset to any angle for best leverage.

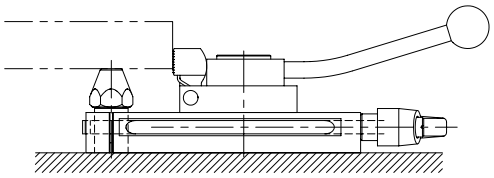

Mounting slot allows stacking other components, such as this Cam Edge Clamp, on top of the support.

Screw Rest Pads (page 159), available from 1/4" to 2" tall, are ideal fixed contact bolts to use in the support plunger.

For adjustable contact screws, see Knurled Screw Jacks (page 163).

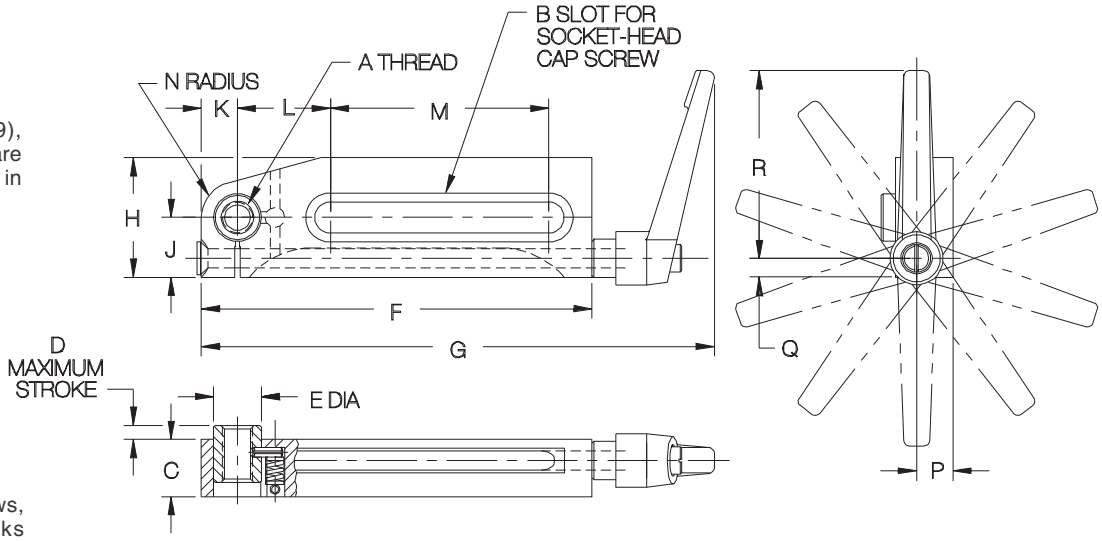

USA

PART NO.	A	B	C	D	E DIA	F	G	H	J	K	L	M	N	P	Q	R	LOAD CAPACITY (LBS)
CL-MF25-5701	5/16-18	5/16-18 or M8	.708	.118	.591	3-3/8	5-1/16	1-3/16	25/32	13/32	1-1/16	1-13/32	13/32	.433	9/32	2-9/16	110
CL-MF40-5701	1/2-13	1/2-13 or M12	.945	.236	.787	6-1/2	8-9/16	2	1	19/32	1-17/32	3-9/16	19/32	.551	5/16	3-1/8	550
CL-MF50-5701	5/8-11	5/8-11 or M16	1.339	.433	1.102	7-1/2	10-7/16	2-3/8	1-9/16	13/16	1-3/4	4-1/16	13/16	.846	1/2	4-5/16	1100

METRIC

PART NO.	A	B	C	D	E DIA	F	G	H	J	K	L	M	N	P	Q	R	LOAD CAPACITY (LBS)
CL-MF08-5701	M8	5/16-18 or M8	.708	.118	.591	3-3/8	5-1/16	1-3/16	25/32	13/32	1-1/16	1-13/32	13/32	.433	9/32	2-9/16	110
CL-MF12-5701	M12	1/2-13 or M12	.945	.236	.787	6-1/2	8-9/16	2	1	19/32	1-17/32	3-9/16	19/32	.551	5/16	3-1/8	550
CL-MF16-5701	M16	5/8-11 or M16	1.339	.433	1.102	7-1/2	10-7/16	2-3/8	1-9/16	13/16	1-3/4	4-1/16	13/16	.846	1/2	4-5/16	1100

Carr Lane®
MANUFACTURING CO.
4200 Carr Lane Ct., P.O. Box 191970
St. Louis, Missouri 63119-7970 USA
Phone: 314-647-6200, FAX: 314-647-5736
Web Site: www.carrlane.com

(Rev. 12-07)

KNURLED SCREW JACKS

12L14 STEEL, CARBURIZED-HARDENED, BLACK OXIDE FINISH

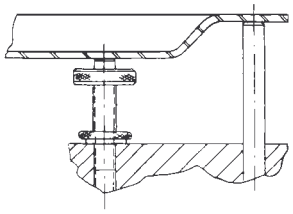

Knurled head allows quick, easy, finger adjustment. Order Knurled Check Nut separately (page 214).

USA

PART NO.	A	B	C DIA	KNURLED CHECK NUT (NOT FURNISHED)
CL-0-KSJ	5/16-18	1-5/8	7/8	CL-51618-TSJN
CL-1-KSJ	3/8-16	1-1/4	1-1/8	CL-3816-TSJN
CL-2-KSJ		1-5/8		
CL-3-KSJ		2		
CL-4-KSJ	1/2-13	1-1/4	1-1/8	CL-1213-TSJN
CL-5-KSJ		1-5/8		
CL-6-KSJ		2		
CL-7-KSJ		2-1/2		
CL-8-KSJ	5/8-11	1-5/8	1-3/8	CL-5811-TSJN
CL-9-KSJ		2		
CL-10-KSJ		2-1/2		

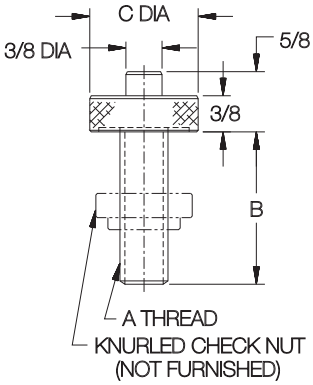

TORQUE SCREW JACKS

12L14 STEEL, BLACK OXIDE FINISH

When indicated end force is reached, the knurled head disengages, eliminating the possibility of exerting excessive pressure on thinwall pieces. Furnished with Knurled Check Nut (see page 214 for dimensions).

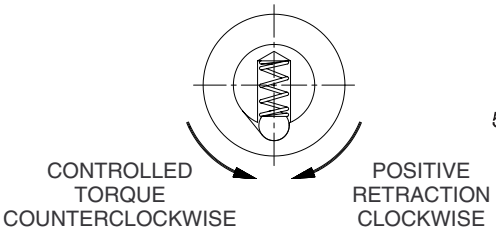

USA

PART NO.	A	END FORCE (LBS)	B	C DIA	KNURLED CHECK NUT (FURNISHED)
CL-4-TSJ	1/4-20	12-14	7/16	7/8	CL-1420-TSJN
CL-4A-TSJ	5/16-18	14-16			CL-51618-TSJN
CL-5-TSJ	3/8-16	16-18			CL-3816-TSJN
CL-6-TSJ	1/2-13	18-20	1/2	1-1/8	CL-1213-TSJN
CL-8-TSJ	5/8-11	20-22			CL-5811-TSJN

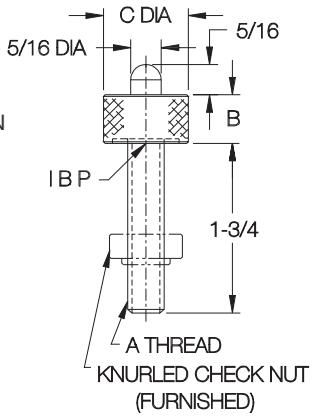

ADJUSTABLE LOCATING BUTTONS

12L14 STEEL, CARBURIZED-HARDENED, BLACK OXIDE FINISH

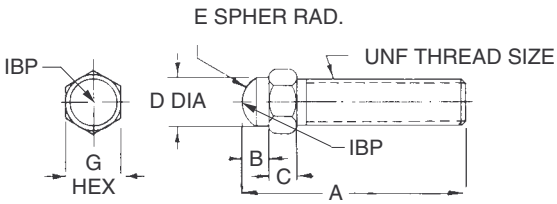

A support screw with fine threads for precise adjustment. (Metric threads and CL-LB-2A are coarse).

USA

PART NO.	THREAD SIZE	A	B	C	D DIA	E	G
CL-LB-1	#10-32	1	1/8	1/8	3/16	1/8	1/4
CL-LB-2	1/4-28	1-1/2	3/16	3/16	1/4	3/16	3/8
CL-LB-2A	1/4-20						
CL-LB-7	5/16-24	1-3/4	1/4	1/4	5/16	3/16	7/16
CL-LB-3	3/8-24	2			3/8	1/4	1/2
CL-LB-4	1/2-20	2-1/2	5/16	5/16	1/2	5/16	5/8
CL-LB-5	5/8-18	3	3/8	3/8	5/8	3/8	3/4
CL-LB-6	3/4-16	3-1/2	7/16	7/16	3/4	7/16	7/8

METRIC

CLM-5-LB	M5	.98	.12	.12	.20	.20	8mm
CLM-6-LB	M6	1.57	.20	.20	.24	.20	10mm
CLM-8-LB	M8	1.77	.24	.24	.31	.20	13mm
CLM-10-LB	M10	1.97			.39	.24	17mm
CLM-12-LB	M12	2.56	.31	.31	.47	.31	19mm
CLM-16-LB	M16	2.95	.39	.39	.63	.39	24mm

Carr Lane®
MANUFACTURING CO.
4200 Carr Lane Ct., P.O. Box 191970
St. Louis, Missouri 63119-7970 USA
Phone: 314-647-6200, FAX: 314-647-5736
Web Site: www.carrlane.com

(Rev. 4-08)

HEAVY-DUTY SCREW JACKS

JACK SCREW: 4135 STEEL, HEAT TREATED, BLACK OXIDE FINISH
TIP: 1144 OR 1045 STEEL, HEAT TREATED, BLACK OXIDE FINISH
BODY: 1045 STEEL, BLACK OXIDE FINISH

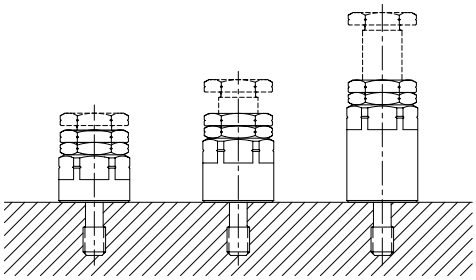

Heavy-duty adjustable support that accepts any of the three tips shown below. Choice of three heights in each size cover the full range of height possibilities.

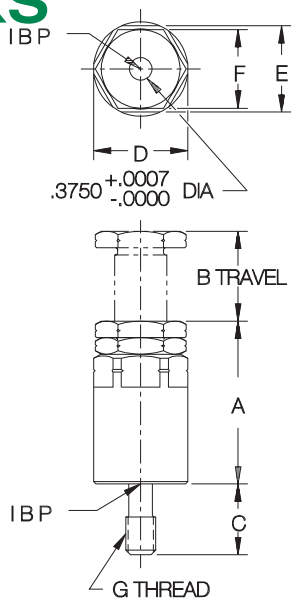

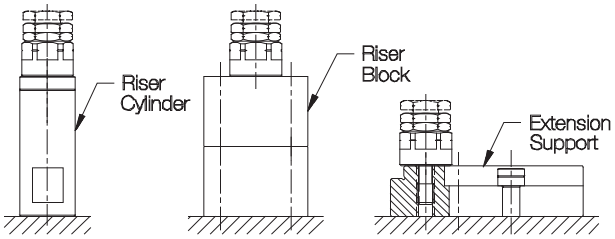

For additional height and/or mounting flexibility, use Riser Cylinders (page 38MF), Support Riser Blocks (page 35MF), or Extension Supports (page 36MF).

SCREW JACKS (USA)

PART NO.	MOUNTING SCREW SIZE	A	B	C	D DIA	E	F	G
CL-MF40-3401	1/2-13	1-5/8	3/8	1-1/4	1-9/16	1-7/16	1-5/16	1/2-13
CL-MF40-3402		2	3/4					
CL-MF40-3403		2-3/4	1-1/2					
CL-MF50-3401	5/8-11	1-5/8	3/8	1-3/8	1-9/16	1-7/16	1-5/16	5/8-11
CL-MF50-3402		2	3/4					
CL-MF50-3403		2-3/4	1-1/2					

SCREW JACKS (METRIC)

CL-MF12-3401	M12	1-5/8	3/8	1-1/4	1-9/16	1-7/16	1-5/16	M12
CL-MF12-3402		2	3/4					
CL-MF12-3403		2-3/4	1-1/2					
CL-MF16-3401	M16	1-5/8	3/8	1-3/8	1-9/16	1-7/16	1-5/16	M16
CL-MF16-3402		2	3/4					
CL-MF16-3403		2-3/4	1-1/2					

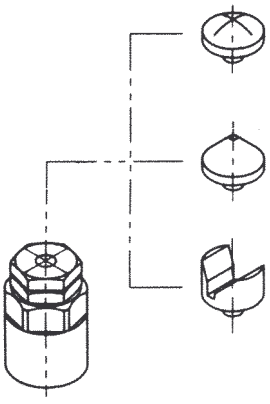

Radius Tip

Conical Tip

V-Shaped Tip

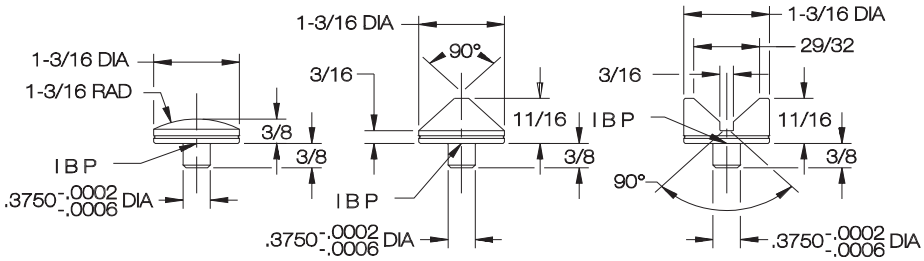

Also see pages 45-56SW for SWIFTSURE hydraulically operated work supports.

SCREW-JACK TIPS

PART NO.	TYPE	FITS SCREW JACKS
CL-MF10-3501	RADIUS	ALL SIZES
CL-MF10-3502	CONICAL	
CL-MF10-3503	V-SHAPED	

Carr Lane MANUFACTURING CO.
4200 Carr Lane Ct., P.O. Box 191970
St. Louis, Missouri 63119-7970 USA
Phone: 314-647-6200, FAX: 314-647-5736
Web Site: www.carrlane.com

(Rev. 10-08)

ECCENTRIC LEVELING LUGS

12L14 STEEL, CARBURIZED-HARDENED, BLACK OXIDE FINISH

Precision side locator that can be doweled in place after adjustment. Use for vertical leveling or horizontal locating. Available hardened, or soft to allow drilling and reaming after installation.

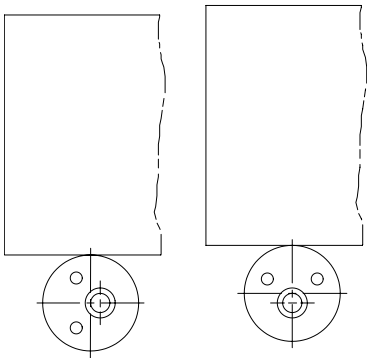

HARDENED

PART NO.	A	B DIA
CL-3-ELL	1/4	1/8 REAMED
CL-4-ELL	3/8	

SOFT

CL-1-ELL	1/4	#31
CL-2-ELL	3/8	

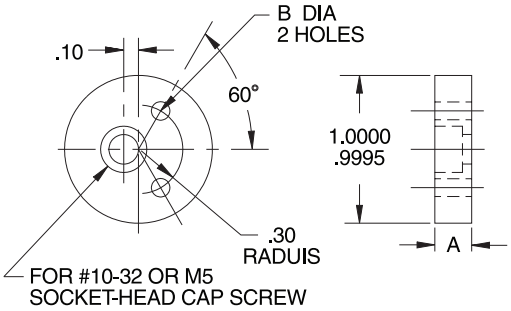

ECCENTRIC-LEVELING-LUG COVERS

MILD STEEL, BLACK OXIDE FINISH

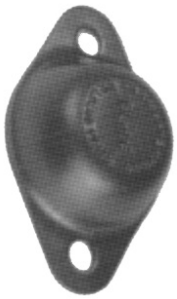

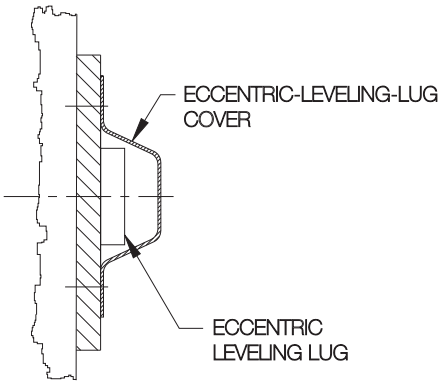

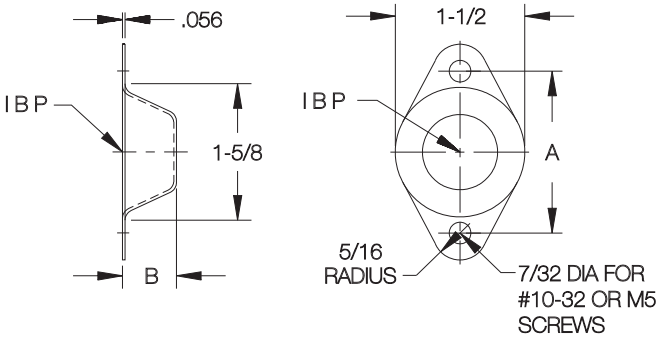

Sturdy cover that protects an Eccentric Leveling Lug from damage or misadjustment after setting.

PART NO.	A	B
CL-1-COVER	1-7/8	5/8

Carr Lane®
MANUFACTURING CO.
4200 Carr Lane Ct., P.O. Box 191970
St. Louis, Missouri 63119-7970 USA
Phone: 314-647-6200, FAX: 314-647-5736
Web Site: www.carrlane.com

(Rev. 12-07)

FLOATING LOCATING PINS

BODY: TOOL STEEL, HEAT TREATED, BLACK OXIDE FINISH
PIN: 1144 STEEL, HEAT TREATED, BLACK OXIDE FINISH

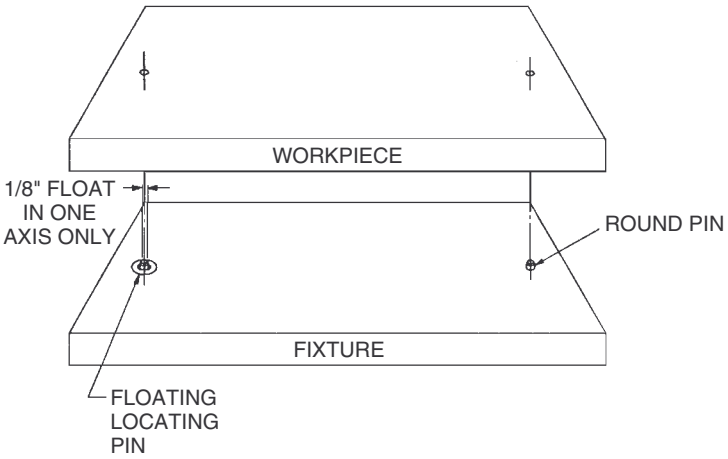

Provides precise location in one axis while allowing considerable float in the perpendicular axis. Use in conjunction with a Round Pin when loose work-piece-hole tolerances require more float than a Diamond Pin would allow. Special pin diameters (A dimensions) are available . . . please contact factory. Patent No. 3,381,554.

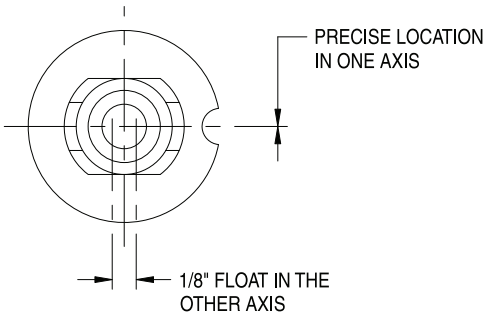

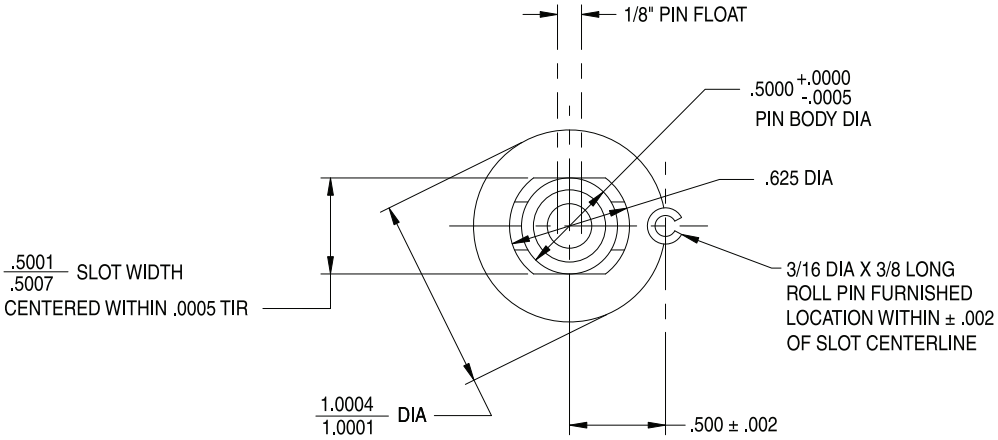

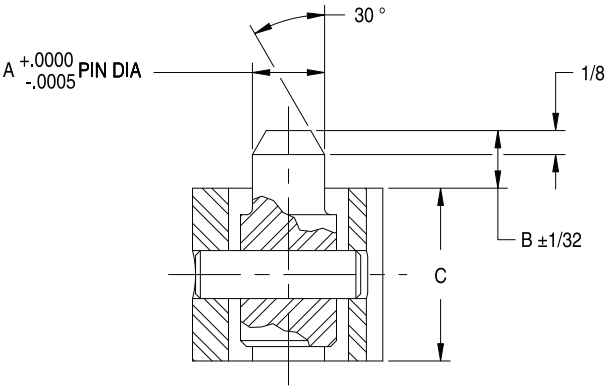

PART NO.	A DIA	B	C
CL-4-FLP	.2500	.300	.400
CL-4A-FLP			.900
CL-5-FLP	.3125	.300	.400
CL-5A-FLP			.900
CL-6-FLP	.3750	.300	.400
CL-6A-FLP			.900
CL-8-FLP	.5000	.300	.400
CL-8A-FLP			.900
CL-10-FLP	.6250	.310	.400
CL-10A-FLP			.900

Carr Lane®
MANUFACTURING CO.
4200 Carr Lane Ct., P.O. Box 191970
St. Louis, Missouri 63119-7970 USA
Phone: 314-647-6200, FAX: 314-647-5736
Web Site: www.carrlane.com

(Rev. 10-07)

ROUND & DIAMOND PINS

1144 STEEL, HEAT TREATED RC 50-55, BLACK OXIDE FINISH

Round Pin

Diamond Pin

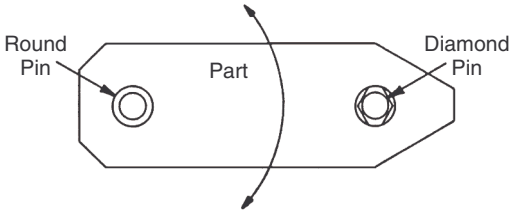

Round pins and diamond (relieved) pins are frequently used together to locate from holes in a workpiece. Diamond pins are relieved, to locate only radially around the round pin, avoiding redundant location. This prevents binding while loading and unloading the part, yet still maintains high accuracy. Note: Round pins also make excellent edge locators. Head and shank diameters are concentric to within .0005 TIR.

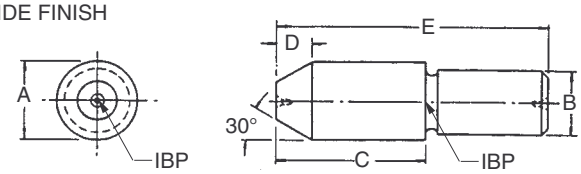

ROUND PINS (USA)

PART NO.	A HEAD DIA NOMINAL	A HEAD DIA ACTUAL	B SHANK DIA NOMINAL	B SHANK DIA ACTUAL	C	D	E
CL-1-RP	1/4	.2495/.2492	3/16	.1878/.1876	11/32	3/32	3/4
CL-2-RP	5/16	.3120/.3117	1/4	.2503/.2501	13/32		7/8
CL-3-RP	3/8	.3745/.3742	5/16	.3128/.3126	1/2	1/8	1
CL-4-RP	7/16	.4370/.4367	3/8	.3753/.3751	19/32	5/32	1-1/4
CL-5-RP	1/2	.4995/.4992	7/16	.4378/.4376	21/32		1-3/8
CL-6-RP	9/16	.5620/.5617	1/2	.5003/.5001	3/4	3/16	1-1/2
CL-7-RP	5/8	.6240/.6237	9/16	.5628/.5626	27/32	7/32	1-3/4
CL-8-RP	11/16	.6865/.6862	5/8	.6253/.6251	29/32		2
CL-9-RP	3/4	.7490/.7487	11/16	.6885/.6880	1	1/4	2-1/8
CL-10-RP	13/16	.8115/.8112	3/4	.7510/.7505	1-3/32	9/32	2-1/4
CL-11-RP	7/8	.8740/.8737	13/16	.8135/.8130	1-5/32		2-1/2
CL-12-RP	15/16	.9365/.9362	7/8	.8760/.8755	1-1/4	5/16	2-3/4
CL-13-RP	1	.9985/.9980	15/16	.9385/.9380	1-5/16		2-7/8

ROUND PINS (METRIC)

CLM-60-RP	6mm	.2357/.2354	5mm	.1972/.1970	11/32	3/32	3/4
CLM-80-RP	8mm	.3145/.3142	6mm	.2365/.2363	13/32		7/8
CLM-100-RP	10mm	.3932/.3929	8mm	.3153/.3151	1/2	1/8	1
CLM-120-RP	12mm	.4719/.4716	10mm	.3940/.3938	21/32	5/32	1-3/8
CLM-140-RP	14mm	.5507/.5504	12mm	.4727/.4725	3/4	3/16	1-1/2
CLM-160-RP	16mm	.6289/.6286	14mm	.5515/.5513	27/32	7/32	1-3/4
CLM-180-RP	18mm	.7077/.7074	16mm	.6302/.6300	29/32		2
CLM-200-RP	20mm	.7864/.7861	18mm	.7097/.7092	1-3/32	9/32	2-1/4

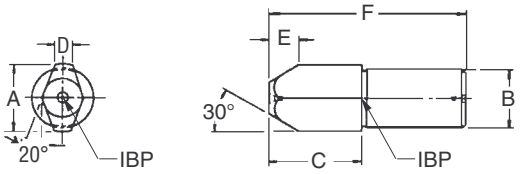

DIAMOND PINS (USA)

PART NO. X (Tight)	PART NO. Y (Medium)	PART NO. Z (Loose)	A HEAD DIA NOMINAL	A HEAD DIA X	A HEAD DIA Y	A HEAD DIA Z	B SHANK DIA NOMINAL	B SHANK DIA ACTUAL	C	D	E	F
CL-1-DPX	CL-1-DPY	CL-1-DPZ	1/4	.2493/.2490	.2485/.2482	.2470/.2467	3/16	.1878/.1876	11/32	.062	3/32	3/4
CL-2-DPX	CL-2-DPY	CL-2-DPZ	5/16	.3118/.3115	.3110/.3107	.3095/.3092	1/4	.2503/.2501	13/32	.078		7/8
CL-3-DPX	CL-3-DPY	CL-3-DPZ	3/8	.3743/.3740	.3735/.3732	.3720/.3717	5/16	.3128/.3126	1/2	.093	1/8	1
CL-4-DPX	CL-4-DPY	CL-4-DPZ	7/16	.4368/.4365	.4360/.4357	.4345/.4342	3/8	.3753/.3751	19/32	.109	5/32	1-1/4
CL-5-DPX	CL-5-DPY	CL-5-DPZ	1/2	.4993/.4990	.4985/.4982	.4970/.4967	7/16	.4378/.4376	21/32	.125		1-3/8
CL-6-DPX	CL-6-DPY	CL-6-DPZ	9/16	.5615/.5610	.5595/.5590	.5575/.5570	1/2	.5003/.5001	3/4	.140	3/16	1-1/2
CL-7-DPX	CL-7-DPY	CL-7-DPZ	5/8	.6240/.6235	.6220/.6215	.6200/.6195	9/16	.5628/.5626	27/32	.156	7/32	1-3/4
CL-8-DPX	CL-8-DPY	CL-8-DPZ	11/16	.6865/.6860	.6845/.6840	.6825/.6820	5/8	.6253/.6251	29/32	.172		2
CL-9-DPX	CL-9-DPY	CL-9-DPZ	3/4	.7490/.7485	.7470/.7465	.7450/.7445	11/16	.6885/.6880	1	.187	1/4	2-1/8
CL-10-DPX	CL-10-DPY	CL-10-DPZ	13/16	.8115/.8110	.8095/.8090	.8075/.8070	3/4	.7510/.7505	1-3/32	.203	9/32	2-1/4
CL-11-DPX	CL-11-DPY	CL-11-DPZ	7/8	.8740/.8735	.8720/.8715	.8700/.8695	13/16	.8135/.8130	1-5/32	.219		2-1/2
CL-12-DPX	CL-12-DPY	CL-12-DPZ	15/16	.9365/.9360	.9345/.9340	.9325/.9320	7/8	.8760/.8755	1-1/4	.234	5/16	2-3/4
CL-13-DPX	CL-13-DPY	CL-13-DPZ	1	.9980/.9972	.9960/.9952	.9920/.9912	15/16	.9385/.9380	1-5/16	.250		2-7/8

DIAMOND PINS (METRIC)

CLM-60-DPX	CLM-60-DPY	CLM-60-DPZ	6mm	.2355/.2352	.2347/.2344	.2332/.2329	5mm	.1972/.1970	11/32	.062	3/32	3/4
CLM-80-DPX	CLM-80-DPY	CLM-80-DPZ	8mm	.3143/.3140	.3135/.3132	.3120/.3117	6mm	.2365/.2363	13/32	.078		7/8
CLM-100-DPX	CLM-100-DPY	CLM-100-DPZ	10mm	.3930/.3927	.3922/.3919	.3907/.3904	8mm	.3153/.3151	1/2	.093	1/8	1
CLM-120-DPX	CLM-120-DPY	CLM-120-DPZ	12mm	.4717/.4714	.4709/.4706	.4694/.4691	10mm	.3940/.3938	21/32	.125	5/32	1-3/8
CLM-140-DPX	CLM-140-DPY	CLM-140-DPZ	14mm	.5502/.5497	.5482/.5477	.5462/.5457	12mm	.4727/.4725	3/4	.140	3/16	1-1/2
CLM-160-DPX	CLM-160-DPY	CLM-160-DPZ	16mm	.6289/.6284	.6269/.6264	.6249/.6244	14mm	.5515/.5513	27/32	.156	7/32	1-3/4
CLM-180-DPX	CLM-180-DPY	CLM-180-DPZ	18mm	.7077/.7072	.7057/.7052	.7037/.7032	16mm	.6302/.6300	29/32	.172		2
CLM-200-DPX	CLM-200-DPY	CLM-200-DPZ	20mm	.7864/.7859	.7844/.7839	.7824/.7819	18mm	.7097/.7092	1-3/32	.203	9/32	2-1/4

Carr Lane®
MANUFACTURING CO.
4200 Carr Lane Ct., P.O. Box 191970
St. Louis, Missouri 63119-7970 USA
Phone: 314-647-6200, FAX: 314-647-5736
Web Site: www.carrlane.com

(Rev. 4-07)

ROUND & DIAMOND LOCATING PINS

1144 STEEL, HEAT TREATED RC 50-55, BLACK OXIDE FINISH

Press-Fit Type Round Pin

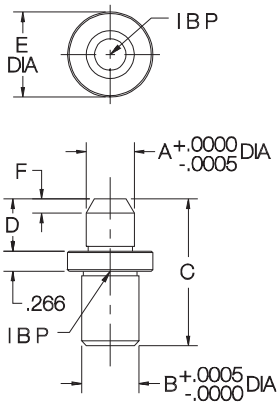

Press-Fit Type Diamond Pin

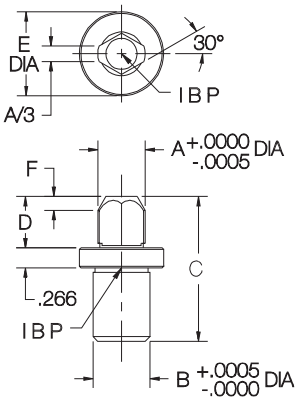

Lockscrew-Type Round Pin

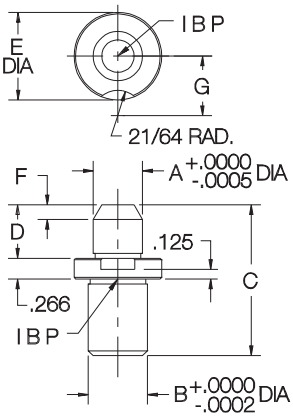

Lockscrew-Type Diamond Pin

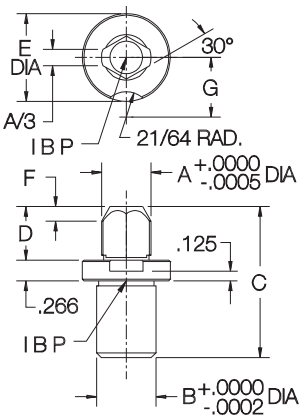

Similar in function to the Round and Diamond Pins on page 176, except with a wider selection of head diameters. The added shoulder also resists forces from above, even when the head diameter is smaller than the shank diameter.

Available either with a press-fit shank for permanent installation, or a slip-fit shank and lockscrew slot for renewable installation. Each nominal head diameter is available in a choice of two fits: medium or tight. Head and shank diameters are concentric to within .0005 TIR.

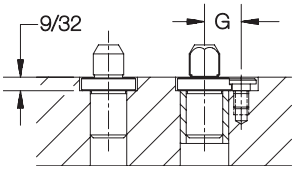

Press-Fit Type | Lockscrew Type

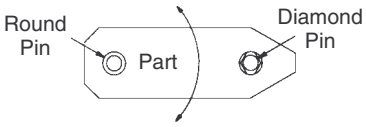

Order liner bushings and lockscrews separately. See table below for proper sizes. (See drill-bushing catalog section for additional dimensions).

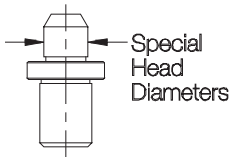

Special head diameters (A dimensions) are readily available in any of the four standard shank diameters:

5 = 5/16" shank (.1150-.3180 head dia)
8 = 1/2" shank (.2780-.5040 head dia)
12 = 3/4" shank (.4640-.7540 head dia)
16 = 1" shank (.7140-1.0040 head dia)

Example: For a press-fit round pin with a 1/2-inch shank and A=.4000 inches, order CL-8-RPT-.4000.

METRIC HEAD DIAMETER

PRESS-FIT TYPE		LOCKSCREW TYPE		B	A									
ROUND PIN PART NO.	DIAMOND PIN PART NO.	ROUND PIN PART NO.	DIAMOND PIN PART NO.	SHANK DIA	HEAD DIA NOMINAL	HEAD DIA ACTUAL	C	D	E DIA	F	G	LINER PART NO.	HEAD LINER PART NO.	LOCK-SCREW PART NO.
CL-5-RPT-.2347	CL-5-DPT-.2347	CL-5-RLT-.2347	CL-5-DLT-.2347	5/16	6mm	.2347	1-3/16	7/16	5/8	3/32	33/64	L-32-8	HL-32-8	LS-1
CL-5-RPT-.2357	CL-5-DPT-.2357	CL-5-RLT-.2357	CL-5-DLT-.2357			.2357								
CL-8-RPT-.3130	CL-8-DPT-.3130	CL-8-RLT-.3130	CL-8-DLT-.3130	1/2	8mm	.3130	1-1/2	1/2	7/8	1/8	41/64	L-48-12	HL-48-12	
CL-8-RPT-.3140	CL-8-DPT-.3140	CL-8-RLT-.3140	CL-8-DLT-.3140			.3140								
CL-8-RPT-.3917	CL-8-DPT-.3917	CL-8-RLT-.3917	CL-8-DLT-.3917		10mm	.3917								
CL-8-RPT-.3927	CL-8-DPT-.3927	CL-8-RLT-.3927	CL-8-DLT-.3927			.3927								
CL-8-RPT-.4704	CL-8-DPT-.4704	CL-8-RLT-.4704	CL-8-DLT-.4704		12mm	.4704								
CL-8-RPT-.4714	CL-8-DPT-.4714	CL-8-RLT-.4714	CL-8-DLT-.4714			.4714								
CL-12-RPT-.5492	CL-12-DPT-.5492	CL-12-RLT-.5492	CL-12-DLT-.5492	3/4	14mm	.5492	1-15/16	11/16	1-1/8	3/16	49/64	L-64-16	HL-64-16	
CL-12-RPT-.5502	CL-12-DPT-.5502	CL-12-RLT-.5502	CL-12-DLT-.5502			.5502								
CL-12-RPT-.6279	CL-12-DPT-.6279	CL-12-RLT-.6279	CL-12-DLT-.6279		16mm	.6279								
CL-12-RPT-.6289	CL-12-DPT-.6289	CL-12-RLT-.6289	CL-12-DLT-.6289			.6289								
CL-12-RPT-.7067	CL-12-DPT-.7067	CL-12-RLT-.7067	CL-12-DLT-.7067		18mm	.7067								
CL-12-RPT-.7077	CL-12-DPT-.7077	CL-12-RLT-.7077	CL-12-DLT-.7077			.7077								
CL-16-RPT-.7854	CL-16-DPT-.7854	CL-16-RLT-.7854	CL-16-DLT-.7854	1	20mm	.7854	2-5/8	1	1-1/2	9/32	61/64	L-88-22	HL-88-22	
CL-16-RPT-.7864	CL-16-DPT-.7864	CL-16-RLT-.7864	CL-16-DLT-.7864			.7864								

CarrLane MANUFACTURING CO.
4200 Carr Lane Ct., P.O. Box 191970
St. Louis, Missouri 63119-7970 USA
Phone: 314-647-6200, FAX: 314-647-5736
Web Site: www.carrlane.com

(Rev. 8-98)

ROUND & DIAMOND LOCATING PINS

USA HEAD DIAMETER

PRESS-FIT TYPE		LOCKSCREW TYPE		B	A				E					LOCK-
ROUND PIN PART NO.	DIAMOND PIN PART NO.	ROUND PIN PART NO.	DIAMOND PIN PART NO.	SHANK DIA	HEAD DIA NOMINAL	HEAD DIA ACTUAL	C	D	DIA	F	G	LINER PART NO.	HEAD LINER PART NO.	SCREW PART NO.
CL-123-RPT	CL-123-DPT	CL-123-RLT	CL-123-DLT	5/16	1/8	.1235	1-3/16	7/16	5/8	3/32	33/64	L-32-8	HL-32-8	LS-1
CL-124-RPT	CL-124-DPT	CL-124-RLT	CL-124-DLT			.1245								
CL-154-RPT	CL-154-DPT	CL-154-RLT	CL-154-DLT		5/32	.1548								
CL-155-RPT	CL-155-DPT	CL-155-RLT	CL-155-DLT			.1558								
CL-186-RPT	CL-186-DPT	CL-186-RLT	CL-186-DLT		3/16	.1860								
CL-187-RPT	CL-187-DPT	CL-187-RLT	CL-187-DLT			.1870								
CL-217-RPT	CL-217-DPT	CL-217-RLT	CL-217-DLT		7/32	.2173								
CL-218-RPT	CL-218-DPT	CL-218-RLT	CL-218-DLT			.2183								
CL-248-RPT	CL-248-DPT	CL-248-RLT	CL-248-DLT		1/4	.2485								
CL-249-RPT	CL-249-DPT	CL-249-RLT	CL-249-DLT			.2495								
CL-279-RPT	CL-279-DPT	CL-279-RLT	CL-279-DLT		9/32	.2798								
CL-280-RPT	CL-280-DPT	CL-280-RLT	CL-280-DLT			.2808								
CL-311-RPT	CL-311-DPT	CL-311-RLT	CL-311-DLT		5/16	.3110								
CL-312-RPT	CL-312-DPT	CL-312-RLT	CL-312-DLT			.3120								
CL-310-RPT	CL-310-DPT	CL-310-RLT	CL-310-DLT	1/2	5/16	.3105	1-1/2	1/2	7/8	1/8	41/64	L-48-12	HL-48-12	
CL-3115-RPT	CL-3115-DPT	CL-3115-RLT	CL-3115-DLT			.3115								
CL-341-RPT	CL-341-DPT	CL-341-RLT	CL-341-DLT		11/32	.3418								
CL-342-RPT	CL-342-DPT	CL-342-RLT	CL-342-DLT			.3428								
CL-373-RPT	CL-373-DPT	CL-373-RLT	CL-373-DLT		3/8	.3730								
CL-374-RPT	CL-374-DPT	CL-374-RLT	CL-374-DLT			.3740								
CL-404-RPT	CL-404-DPT	CL-404-RLT	CL-404-DLT		13/32	.4043								
CL-405-RPT	CL-405-DPT	CL-405-RLT	CL-405-DLT			.4053								
CL-435-RPT	CL-435-DPT	CL-435-RLT	CL-435-DLT		7/16	.4355								
CL-436-RPT	CL-436-DPT	CL-436-RLT	CL-436-DLT			.4365								
CL-466-RPT	CL-466-DPT	CL-466-RLT	CL-466-DLT		15/32	.4668								
CL-467-RPT	CL-467-DPT	CL-467-RLT	CL-467-DLT			.4678								
CL-498-RPT	CL-498-DPT	CL-498-RLT	CL-498-DLT		1/2	.4980								
CL-499-RPT	CL-499-DPT	CL-499-RLT	CL-499-DLT			.4990								
CL-4980-RPT	CL-4980-DPT	CL-4980-RLT	CL-4980-DLT	3/4	1/2	.4980	1-15/16	11/16	1-1/8	3/16	49/64	L-64-16	HL-64-16	
CL-4990-RPT	CL-4990-DPT	CL-4990-RLT	CL-4990-DLT			.4990								
CL-529-RPT	CL-529-DPT	CL-529-RLT	CL-529-DLT		17/32	.5293								
CL-530-RPT	CL-530-DPT	CL-530-RLT	CL-530-DLT			.5303								
CL-560-RPT	CL-560-DPT	CL-560-RLT	CL-560-DLT		9/16	.5605								
CL-561-RPT	CL-561-DPT	CL-561-RLT	CL-561-DLT			.5615								
CL-591-RPT	CL-591-DPT	CL-591-RLT	CL-591-DLT		19/32	.5918								
CL-592-RPT	CL-592-DPT	CL-592-RLT	CL-592-DLT			.5928								
CL-623-RPT	CL-623-DPT	CL-623-RLT	CL-623-DLT		5/8	.6230								
CL-624-RPT	CL-624-DPT	CL-624-RLT	CL-624-DLT			.6240								
CL-654-RPT	CL-654-DPT	CL-654-RLT	CL-654-DLT		21/32	.6543								
CL-655-RPT	CL-655-DPT	CL-655-RLT	CL-655-DLT			.6553								
CL-685-RPT	CL-685-DPT	CL-685-RLT	CL-685-DLT		11/16	.6855								
CL-686-RPT	CL-686-DPT	CL-686-RLT	CL-686-DLT			.6865								
CL-716-RPT	CL-716-DPT	CL-716-RLT	CL-716-DLT		23/32	.7168								
CL-717-RPT	CL-717-DPT	CL-717-RLT	CL-717-DLT			.7178								
CL-748-RPT	CL-748-DPT	CL-748-RLT	CL-748-DLT		3/4	.7480								
CL-749-RPT	CL-749-DPT	CL-749-RLT	CL-749-DLT			.7490								
CL-7480-RPT	CL-7480-DPT	CL-7480-RLT	CL-7480-DLT	1	3/4	.7480	2-5/8	1	1-1/2	9/32	61/64	L-88-22	HL-88-22	
CL-7490-RPT	CL-7490-DPT	CL-7490-RLT	CL-7490-DLT			.7490								
CL-779-RPT	CL-779-DPT	CL-779-RLT	CL-779-DLT		25/32	.7793								
CL-780-RPT	CL-780-DPT	CL-780-RLT	CL-780-DLT			.7803								
CL-810-RPT	CL-810-DPT	CL-810-RLT	CL-810-DLT		13/16	.8105								
CL-811-RPT	CL-811-DPT	CL-811-RLT	CL-811-DLT			.8115								
CL-841-RPT	CL-841-DPT	CL-841-RLT	CL-841-DLT		27/32	.8418								
CL-842-RPT	CL-842-DPT	CL-842-RLT	CL-842-DLT			.8428								
CL-873-RPT	CL-873-DPT	CL-873-RLT	CL-873-DLT		7/8	.8730								
CL-874-RPT	CL-874-DPT	CL-874-RLT	CL-874-DLT			.8740								
CL-904-RPT	CL-904-DPT	CL-904-RLT	CL-904-DLT		29/32	.9043								
CL-905-RPT	CL-905-DPT	CL-905-RLT	CL-905-DLT			.9053								
CL-935-RPT	CL-935-DPT	CL-935-RLT	CL-935-DLT		15/16	.9355								
CL-936-RPT	CL-936-DPT	CL-936-RLT	CL-936-DLT			.9365								
CL-966-RPT	CL-966-DPT	CL-966-RLT	CL-966-DLT		31/32	.9668								
CL-967-RPT	CL-967-DPT	CL-967-RLT	CL-967-DLT			.9678								
CL-998-RPT	CL-998-DPT	CL-998-RLT	CL-998-DLT		1	.9980								
CL-999-RPT	CL-999-DPT	CL-999-RLT	CL-999-DLT			.9990								

Carr Lane®
MANUFACTURING CO.
4200 Carr Lane Ct., P.O. Box 191970
St. Louis, Missouri 63119-7970 USA
Phone: 314-647-6200, FAX: 314-647-5736
Web Site: www.carrlane.com

(Rev. 9-09)

BULLET-NOSE DOWELS

1144 STEEL, HEAT TREATED RC 50-62, BLACK OXIDE FINISH

Dowel Pin

Bushing

Precision locating pin often used with a matching bushing to align two pieces of a fixture. The pin's head and shank diameters are concentric to within .0005 TIR. The bushing's ID and OD are concentric to within .0003 TIR.

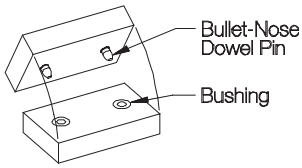

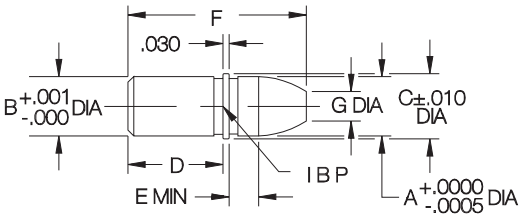

DOWEL PINS (USA)

PART NO.	A HEAD DIA NOMINAL	A HEAD DIA ACTUAL	B SHANK DIA NOMINAL	B SHANK DIA ACTUAL	C DIA	D	E	F	G DIA
CL-1-BND	1/4	.2499	1/4	.2510	.280	1/2	.12	.90	1/8
CL-2-BND	5/16	.3124	5/16	.3135	.344		.15	.94	5/32
CL-3-BND	3/8	.3749	3/8	.3760	.407		.18	1.03	3/16
CL-4-BND	1/2	.4999	1/2	.5010	.532		.18	1.09	1/4

DOWEL PINS (METRIC)

CLM-60-BND	6mm	.2361	6mm	.2372	.276	.47	.12	.86	.12
CLM-80-BND	8mm	.3149	8mm	.3160	.354		.15	.91	.16
CLM-100-BND	10mm	.3936	10mm	.3947	.433		.19	.98	.20
CLM-120-BND	12mm	.4723	12mm	.4734	.512		.19	1.06	.24

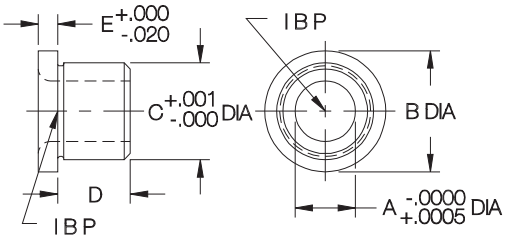

BUSHINGS (USA)

PART NO.	A DIA NOMINAL	A DIA ACTUAL	B DIA	C DIA NOMINAL	C DIA ACTUAL	D	E
CLB-1000	1/4	.2501	.625	1/2	.5002	3/8	.100
CLB-2000	5/16	.3126					
CLB-3000	3/8	.3751	.750	5/8	.6253	1/2	
CLB-4000	1/2	.5001	.875	3/4	.7504	5/8	

BUSHINGS (METRIC)

CLM-60-B	6mm	.2363	.512	10mm	.3939	.276	.118
CLM-80-B	8mm	.3151	.591	12mm	.4726		
CLM-100-B	10mm	.3938	.709	15mm	.5909	.354	
CLM-120-B	12mm	.4725	.866	18mm	.7091	.472	.157

CONE LOCATOR PINS

12L14 STEEL, CARBURIZED-HARDENED, BLACK OXIDE FINISH

Pin

Bushing

Medium-accuracy locating pin that compensates for misalignment to allow quick assembly of two fixture pieces.

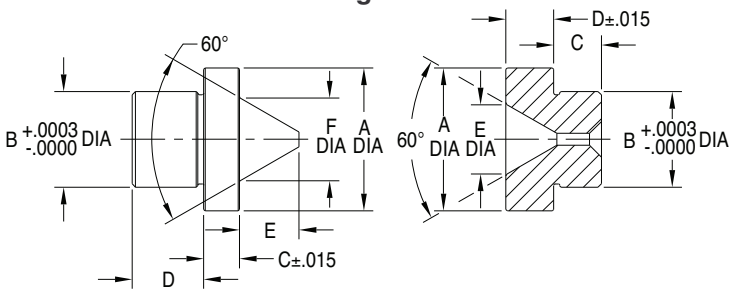

PINS

PART NO.	A DIA	B DIA	C	D	E	F DIA
CL-5-CLP	3/4	.5014	3/16	3/8	5/16	.438
CL-7-CLP	1	.7515		9/16	1/2	.676

BUSHINGS

PART NO.	A DIA	B DIA	C	D	E DIA	GAP BETWEEN HEADS WITH PIN & BUSHING ASSEMBLED
CL-5-CLB	3/4	.5014	1/4	1/4	.370	.050-.068
CL-7-CLB	1	.7515	3/8	3/8	.616	.043-.061

Carr Lane MANUFACTURING CO.
4200 Carr Lane Ct., P.O. Box 191970
St. Louis, Missouri 63119-7970 USA
Phone: 314-647-6200, FAX: 314-647-5736
Web Site: www.carrlane.com

(Rev. 10-07)

BULLET-NOSE PINS

1144 STEEL, HEAT TREATED RC 50-62, BLACK OXIDE FINISH

Bullet-Nose Round Pin

Bushing

Bullet-Nose Diamond Pin

Bullet-nose round pins and diamond pins are often used together (with matching bushings) to align two pieces of a fixture. The diamond pin is relieved, to locate only *radially* around the round pin, avoiding redundant location. This prevents binding, yet still maintains high accuracy.

The pin's shank diameter and the bushing's OD are the same size to allow boring the installation hole in both fixture pieces at the same time, for greater accuracy. The pin's head and shank diameters are concentric to within .0005 TIR. The bushing's ID and OD are concentric to within .0003 TIR.

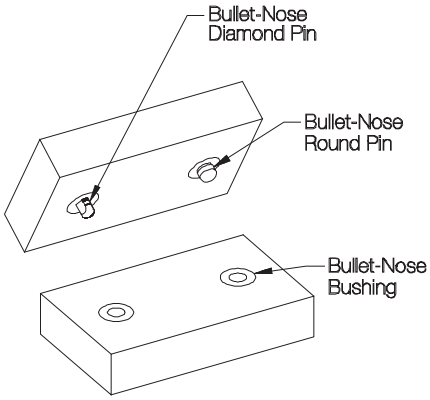

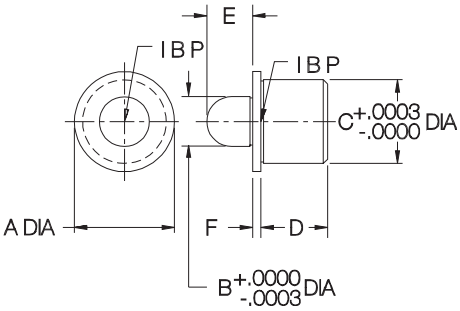

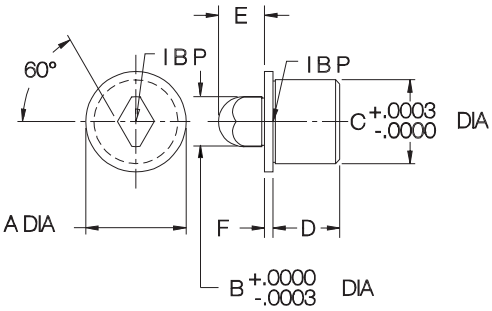

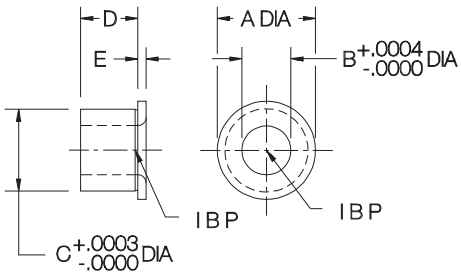

ROUND PINS (USA)

PART NO.	A DIA	B HEAD DIA NOMINAL	B HEAD DIA ACTUAL	C SHANK DIA NOMINAL	C SHANK DIA ACTUAL	D	E	F
CL-8-BND	9/16	1/4	.2499	13/32	.4075	3/8	7/32	1/16
CL-9-BND	5/8	5/16	.3124	1/2	.5014		9/32	
CL-10-BND	3/4	3/8	.3748	5/8	.6265	1/2	11/32	
CL-11-BND	7/8	1/2	.4998	3/4	.7515		13/32	
CL-12-BND	1-1/8	3/4	.7498	1	1.0015	3/4	9/16	1/8
CL-13-BND	1-1/2	1	.9998	1-3/8	1.3768		3/4	

ROUND PINS (METRIC)

CLM-6-BRP	.512	6mm	.2361	10mm	.3950	.35	.24	.079
CLM-8-BRP	.591	8mm	.3149	12mm	.4738		.28	
CLM-10-BRP	.709	10mm	.3935	15mm	.5921	.43	.35	
CLM-12-BRP	.866	12mm	.4722	18mm	.7102		.39	

DIAMOND PINS (USA)

CL-8-BDP	9/16	1/4	.2499	13/32	.4075	3/8	7/32	1/16
CL-9-BDP	5/8	5/16	.3124	1/2	.5014		9/32	
CL-10-BDP	3/4	3/8	.3748	5/8	.6265	1/2	11/32	
CL-11-BDP	7/8	1/2	.4998	3/4	.7515		13/32	
CL-12-BDP	1-1/8	3/4	.7498	1	1.0015	3/4	9/16	1/8
CL-13-BDP	1-1/2	1	.9998	1-3/8	1.3768		3/4	

DIAMOND PINS (METRIC)

CLM-6-BDP	.512	6mm	.2361	10mm	.3950	.35	.24	.079
CLM-8-BDP	.591	8mm	.3149	12mm	.4738		.28	
CLM-10-BDP	.709	10mm	.3935	15mm	.5921	.43	.35	
CLM-12-BDP	.866	12mm	.4722	18mm	.7102		.39	

BUSHINGS (USA)

PART NO.	A DIA	B DIA NOMINAL	B DIA ACTUAL	C DIA NOMINAL	C DIA ACTUAL	D	E
CLB-8000	9/16	1/4	.2501	13/32	.4075	7/16	1/16
CLB-9000	5/8	5/16	.3126	1/2	.5014		
CLB-10000	3/4	3/8	.3751	5/8	.6265		
CLB-11000	7/8	1/2	.5001	3/4	.7515	1/2	
CLB-12000	1-1/8	3/4	.7502	1	1.0015		1/8
CLB-13000	1-1/2	1	1.0002	1-3/8	1.3768	11/16	

BUSHINGS (METRIC)

CLM-6-B	.512	6mm	.2363	10mm	.3950	.31	.079
CLM-8-B	.591	8mm	.3151	12mm	.4738		
CLM-10-B	.709	10mm	.3938	15mm	.5921	.39	
CLM-12-B	.866	12mm	.4725	18mm	.7102		

Carr Lane MANUFACTURING CO.
4200 Carr Lane Ct., P.O. Box 191970
St. Louis, Missouri 63119-7970 USA
Phone: 314-647-6200, FAX: 314-647-5736
Web Site: www.carrlane.com

(Rev. 12-07)

CONSTRUCTION BALLS

52100 STEEL BALL, HEAT TREATED RC 54-56, 1018 STEEL SHANK
OR ALL 1144 STEEL, HEAT TREATED RC 54-56

Shoulder Type (USA)

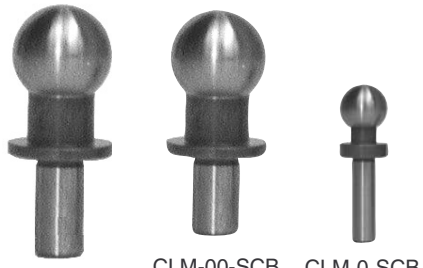

Shoulder Type (Metric)

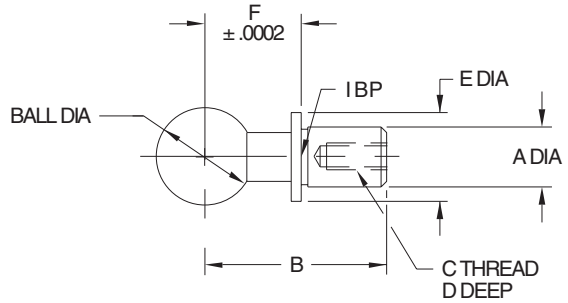

Style 1

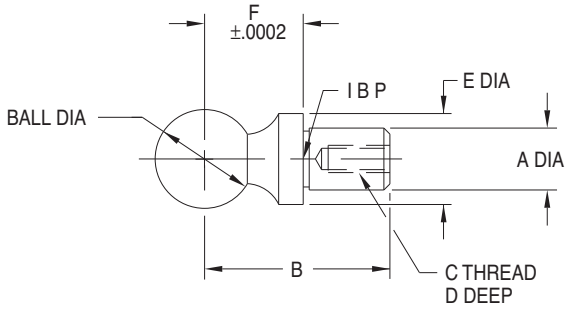

Style 2

Precision tooling ball used as a reference point for critical inspection, layout, and machining operations. Shoulder type has a precision height-reference shoulder to locate the ball in three dimensions. Concentricity between ball and shank is .0002" TIR. Available with ball diameters from 1/4 to 3/4" (6 to 12mm in metric), in various shank diameters and lengths. Note: Catalog photos are actual size.

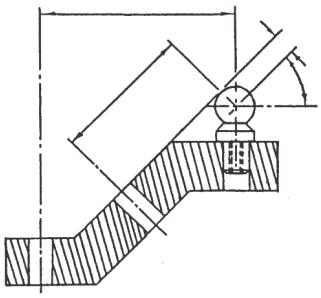

Shoulder-Type Construction Balls provide a reference point in three dimensions.

SHOULDER TYPE (USA)

PART NO.	BALL DIA NOMINAL	BALL DIA ACTUAL	A DIA NOMINAL	A DIA ACTUAL	B	C	D	E DIA	F	STYLE
CL-0-SCB	1/4	.2502/.2498	1/8	.1250/.1246	.56	—	—	.25	.2000	1
CL-00-SCB	3/8	.3752/.3748	3/16	.1875/.1871	.75	—	—	.37	.3000	
CL-1-SCB	1/2	.5000/.4997	1/4	.2500/.2497	.63	#6-32	1/4	.46	.3125	2
CL-10-SCB		.5002/.4998		.2500/.2496	.94	—	—		.4000	1
CL-2-SCB		.5000/.4997		.2500/.2497	.94	#6-32	5/16		.5000	2
CL-3-SCB					1.50	—	—			
CL-4-SCB			5/16	.3125/.3122	.94	#6-32	5/16	.46	.5000	
CL-5-SCB					1.50	—	—			
CL-6-SCB			3/8	.3750/.3747	1.50	—	—	.56	.5000	
CL-7-SCB	3/4	.7502/.7498	3/8	.3750/.3746	1.25	—	—	.75	.5000	1

SHOULDER TYPE (METRIC)

CLM-0-SCB	6mm	.2364/.2360	3mm	.1181/.1177	.47	—	—	.24	.2362 (6mm)	1
CLM-00-SCB	12mm	.4726/.4722	6mm	.2362/.2358	.87	—	—	.47	.4724 (12mm)	
CLM-1-SCB					.98	M3.5	.24			

Carr Lane®
MANUFACTURING CO.
4200 Carr Lane Ct., P.O. Box 191970
St. Louis, Missouri 63119-7970 USA
Phone: 314-647-6200, FAX: 314-647-5736
Web Site: www.carrlane.com

(Rev. 12-07)

CONSTRUCTION BALLS

52100 STEEL BALL, HEAT TREATED RC 54-56, 1018 STEEL SHANK
OR ALL 1144 STEEL, HEAT TREATED RC 54-56

CL-5-CB
1/2" Ball

CL-3-CB
1/2" Ball

CL-1-CB
1/2" Ball

CL-00-CB
3/8" Ball

CL-0-CB
1/4" Ball

Adjustable Type

Precision tooling ball used as a reference point for critical inspection, layout, and machining operations. Adjustable type has no shoulder, so it can be set at any desired height then locked with a setscrew. Concentricity between ball and shank is .0002" TIR. Available with ball diameters from 1/4 to 1/2", in various shank diameters and lengths. Note: Catalog photos are actual size.

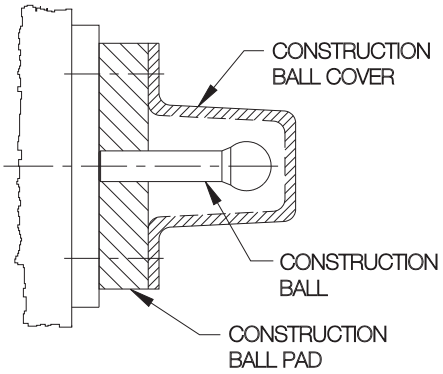

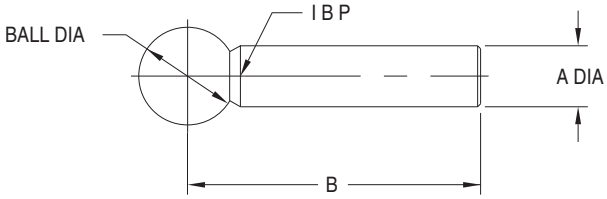

Style 1 — One Piece Construction

Style 2 — Two-Piece Welded Construction

ADJUSTABLE TYPE (USA)

PART NO.	BALL DIA NOMINAL	BALL DIA ACTUAL	A DIA NOMINAL	A DIA ACTUAL	B	STYLE
CL-0-CB	1/4	.2502/.2498	1/8	.1250/.1246	.56	1
CL-00-CB	3/8	.3752/.3748	3/16	.1875/.1871	.75	1
CL-1-CB	1/2	.5000/.4997	1/4	.2500/.2497	1.50	2
CL-3-CB			5/16	.3125/.3122		
CL-5-CB			3/8	.3750/.3747		

Carr Lane®
MANUFACTURING CO.
4200 Carr Lane Ct., P.O. Box 191970
St. Louis, Missouri 63119-7970 USA
Phone: 314-647-6200, FAX: 314-647-5736
Web Site: www.carrlane.com

(Rev. 7-06)

CONSTRUCTION-BALL PADS

1018 STEEL, BLACK OXIDE FINISH

Mounting block for adjustable-type Construction Balls. Adjust to desired height, then lock with a setscrew. The two #10-24 holes allow mounting a Construction Ball Cover (see below) to protect the Construction Ball.

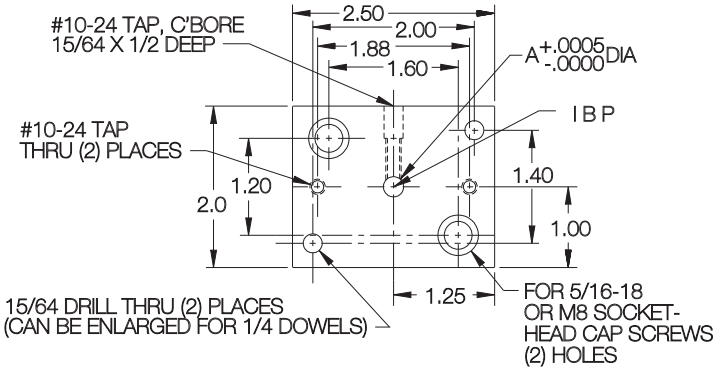

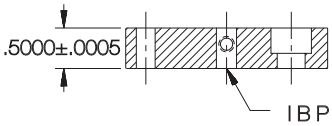

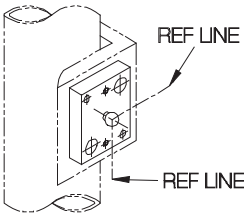

PART NO.	A DIA
CL-1-CBP	.2500

CONSTRUCTION-BALL COVERS

ZINC DIE CASTING

Sturdy cover that protects a Construction Ball from damage after installation.

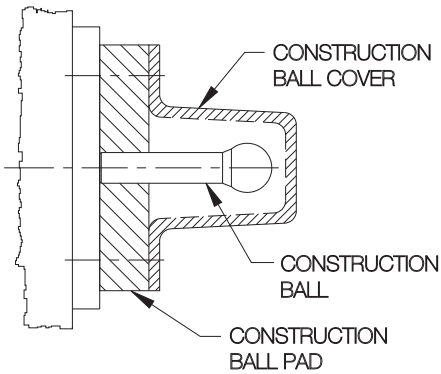

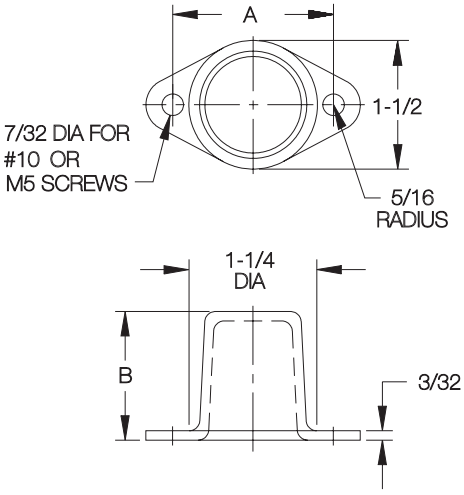

PART NO.	A	B
CL-2-COVER	1-7/8	1-1/2

Carr Lane®
MANUFACTURING CO.
4200 Carr Lane Ct., P.O. Box 191970
St. Louis, Missouri 63119-7970 USA
Phone: 314-647-6200, FAX: 314-647-5736
Web Site: www.carrlane.com

(Rev. 6-06)

FIXTURE KEYS

1018 STEEL, CARBURIZED-HARDENED, BLACK OXIDE FINISH

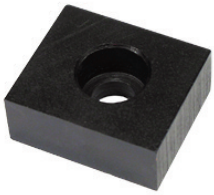

Standard key for fixtures slotted to mount on one specific machine table. Depth of slot in fixture should be 1/2 of B dimension.

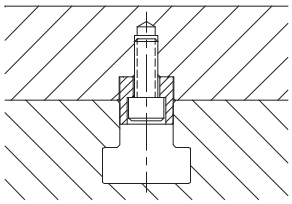

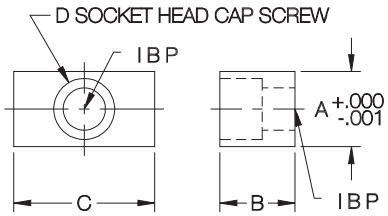

USA

PART NO.	TABLE SLOT SIZE	A	B	C	D
CL-1-FK	1/2	.5000	1/2	3/4	1/4-20
CL-2-FK	9/16	.5625			
CL-3-FK	5/8	.6250		3/4	5/16-18
CL-4-FK	11/16	.6875		1	
CL-5-FK	3/4	.7500		1-1/4	
CL-6-FK	13/16	.8125			
CL-7-FK	1-1/16	1.0625			

METRIC

CLM-12-FK	12mm	.4724	.315	.787	M5
CLM-14-FK	14mm	.5512	.394	.866	M6
CLM-16-FK	16mm	.6299			
CLM-18-FK	18mm	.7087			
CLM-20-FK	20mm	.7874			

STEP FIXTURE KEYS

MILD STEEL, CARBURIZED-HARDENED, BLACK OXIDE FINISH

Adapts a key-slotted fixture or vise to machine tables with a different slot size. Available for US or metric slots. Top and bottom of key are centered within .0005 of each other.

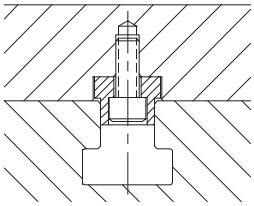

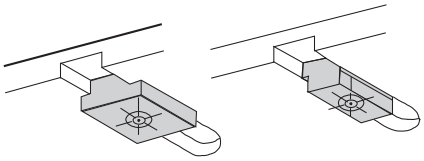

Step Fixture Keys are available for machine-table slots either larger or smaller than a given fixture slot. (Viewed from underside of fixture.)

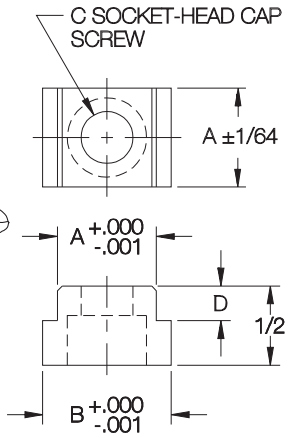

USA FIXTURE SLOTS

PART NO.	FIXTURE SLOT SIZE	A	TABLE SLOT SIZE	B	C	D
CL-8-SFK-437	1/2	.5000	7/16	.4375	1/4 or M6	9/32
CL-8-SFK-562			9/16	.5625		7/32
CL-8-SFK-625			5/8	.6250		
CL-8-SFK-687			11/16	.6875		
CL-8-SFK-12			12mm	.4724		9/32
CL-8-SFK-14			14mm	.5512		7/32
CL-8-SFK-16			16mm	.6299		
CL-8-SFK-18			18mm	.7087		
CL-9-SFK-437	9/16	.5625	7/16	.4375	1/4 or M6	9/32
CL-9-SFK-500			1/2	.5000		
CL-9-SFK-625			5/8	.6250		7/32
CL-9-SFK-12			12mm	.4724		9/32
CL-9-SFK-14			14mm	.5512		
CL-9-SFK-16			16mm	.6299		7/32
CL-10-SFK-500	5/8	.6250	1/2	.5000	5/16 or M8	9/32
CL-10-SFK-562			9/16	.5625		
CL-10-SFK-687			11/16	.6875		7/32
CL-10-SFK-750			3/4	.7500		
CL-10-SFK-812			13/16	.8125		
CL-10-SFK-12			12mm	.4724		9/32
CL-10-SFK-14			14mm	.5512		
CL-10-SFK-16			16mm	.6299		7/32
CL-10-SFK-18			18mm	.7087		
CL-10-SFK-20			20mm	.7874		
CL-11-SFK-562	11/16	.6875	9/16	.5625	5/16 or M8	9/32
CL-11-SFK-625			5/8	.6250		
CL-11-SFK-750			3/4	.7500		7/32
CL-11-SFK-812			13/16	.8125		
CL-11-SFK-16			16mm	.6299		9/32
CL-11-SFK-18			18mm	.7087		7/32
CL-11-SFK-20			20mm	.7874		
CL-12-SFK-625	3/4	.7500	5/8	.6250	5/16 or M8	9/32
CL-12-SFK-687			11/16	.6875		
CL-12-SFK-812			13/16	.8125		7/32
CL-12-SFK-18			18mm	.7087		9/32
CL-12-SFK-20			20mm	.7874		7/32
CL-13-SFK-687	13/16	.8125	11/16	.6875	5/16 or M8	9/32
CL-13-SFK-750			3/4	.7500		
CL-13-SFK-18			18mm	.7087		
CL-13-SFK-20			20mm	.7874		

METRIC FIXTURE SLOTS

PART NO.	FIXTURE SLOT SIZE	A	TABLE SLOT SIZE	B	C	D
CL-20-SFK-500	20mm	.7874	1/2	.5000	1/4 or M6	9/32
CL-20-SFK-562			9/16	.5625		
CL-20-SFK-625			5/8	.6250		
CL-20-SFK-687			11/16	.6875		
CL-20-SFK-750			3/4	.7500		
CL-20-SFK-812			13/16	.8125		7/32
CL-20-SFK-16			16mm	.6299		9/32
CL-20-SFK-18			18mm	.7087		

Carr Lane®
MANUFACTURING CO.
4200 Carr Lane Ct., P.O. Box 191970
St. Louis, Missouri 63119-7970 USA
Phone: 314-647-6200, FAX: 314-647-5736
Web Site: www.carrlane.com

(Rev. 7-06)

SURE-LOCK™ FIXTURE KEYS

12L14 STEEL, CARBURIZED-HARDENED, BLACK OXIDE FINISH

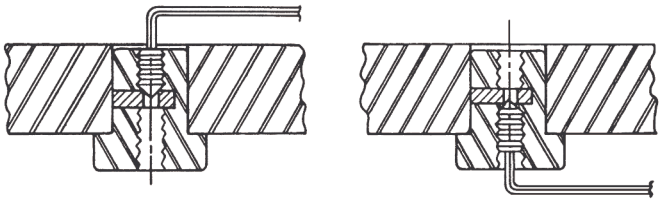

Lock in place from above or below using a hex wrench.

Perfect fixture key for most applications. Keys are interchangeable because they all fit in a 5/8 reamed hole. Allows mounting any fixture on any machine simply by switching keys. Eliminates the need to slot fixtures. Concentricity .0005 TIR or better. Available for US or metric machine-table slots.

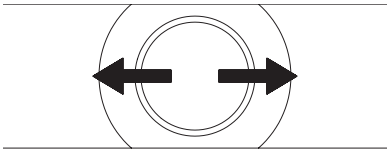

Patented locking action aligns fixture key perfectly with slot axis.

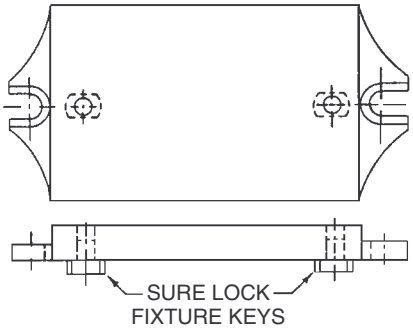

USA

PART NO.	TABLE SLOT SIZE	A	B	C	D
CL-375-SLFK	3/8	.3750	1/2	3/8	.23
CL-437-SLFK	7/16	.4375			
CL-500-SLFK	1/2	.5000			
CL-5000-SLFK			3/4	7/16	.41
CL-562-SLFK	9/16	.5625	1/2	3/8	.23
CL-5625-SLFK			3/4	7/16	.41
CL-625-SLFK	5/8	.6250	1/2	3/8	.23
CL-6250-SLFK			3/4	7/16	.41
CL-687-SLFK	11/16	.6875	1/2	3/8	.23
CL-6875-SLFK			3/4	7/16	.41
CL-7500-SLFK	3/4	.7500			
CL-8125-SLFK	13/16	.8125			

METRIC

PART NO.	TABLE SLOT SIZE	A	B	C	D
CL-12-SLFK	12mm	.4724	1/2	3/8	.23
CL-14-SLFK	14mm	.5512	3/4	7/16	.41
CL-16-SLFK	16mm	.6299			
CL-18-SLFK	18mm	.7087			
CL-20-SLFK	20mm	.7874			
CL-22-SLFK	22mm	.8661			

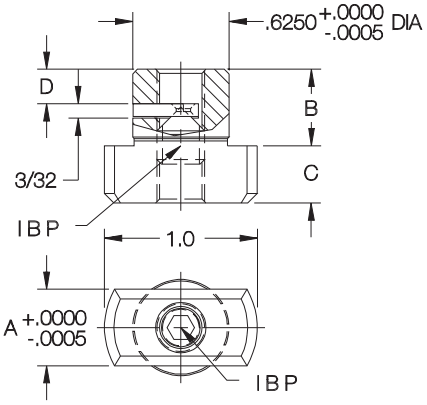

REAMED-HOLE FIXTURE KEYS

12L14 STEEL, CARBURIZED-HARDENED, BLACK OXIDE FINISH

Each key fits two different table slots by turning 90°. Install in a 5/8 reamed hole. Fasten from above with a 5/16–18 socket-head cap screw, or from below with a 1/4–20 socket-head cap screw. Concentricity .0005 or better.

USA

PART NO.	TABLE SLOT SIZES	A	B
CL-1-RFK	5/8 and 11/16	.6250	.6875
CL-2-RFK	5/8 and 3/4		.7500
CL-3-RFK	5/8 and 13/16		.8125
CL-4-RFK	11/16 and 3/4	.6875	.7500
CL-5-RFK	11/16 and 13/16		.8125
CL-6-RFK	3/4 and 13/16	.7500	.8125

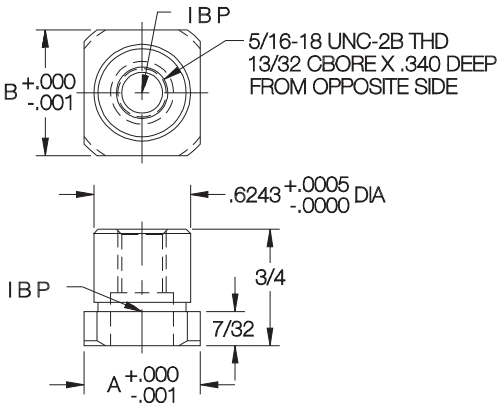

MANUFACTURING CO.
4200 Carr Lane Ct., P.O. Box 191970
St. Louis, Missouri 63119-7970 USA
Phone: 314-647-6200, FAX: 314-647-5736
Web Site: www.carrlane.com

(Rev. 10-07)

LOCATING KEYS

1144 OR 1045 STEEL, HEAT TREATED, BLACK OXIDE FINISH

Standard removable-type fixture key for large fixtures. Can be inserted from above after placing fixture on machine, then removed again if desired after the fixture is fastened. Keeps bottom of fixture free of obstructions. Install in a 1-3/16" reamed hole. True position within .0005 or better.

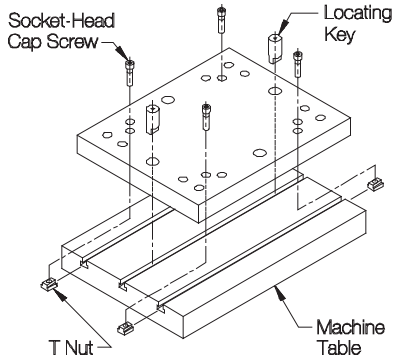

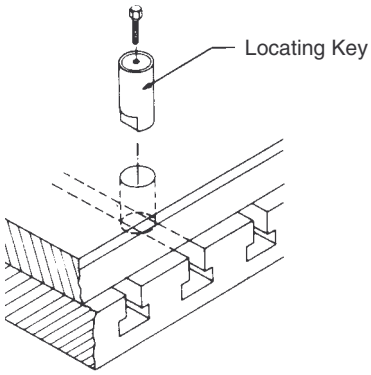

USA

PART NO.	TABLE SLOT SIZE	A
CL-MF10-4406	9/16	.5625
CL-MF10-4407	5/8	.6250
CL-MF10-4408	11/16	.6875
CL-MF10-4409	3/4	.7500
CL-MF10-4411	13/16	.8125
CL-MF10-4410	7/8	.8750

METRIC

CL-MF10-4401	14mm	.5512
CL-MF10-4402	16mm	.6299
CL-MF10-4403	18mm	.7087
CL-MF10-4404	20mm	.7874
CL-MF10-4405	22mm	.8661

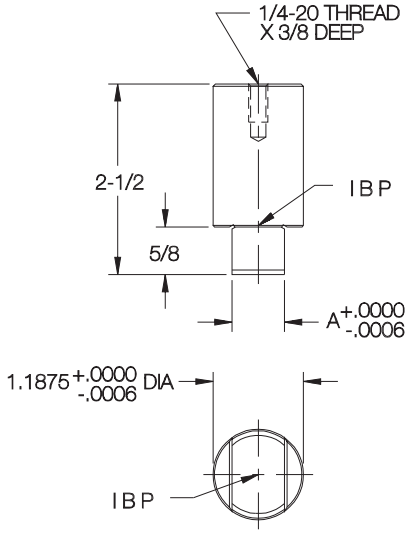

SUBPLATE LOCATING KEYS

1144 STEEL, HEAT TREATED, BLACK OXIDE FINISH

Round **Diamond**

Subplate Locating Keys are the new standard for mounting quick-change fixture plates on a subplate. A round key and a diamond (relieved) key are used together for precise location without binding. Diamond Keys are marked on top to ensure proper orientation in the hole. Two standard diameters match standard fixture-key holes. This allows mounting the same fixture plate either on a subplate (3-axis location) or directly on a machine table (2-axis location). The 5/8"-diameter key fits in the same hole as a Sure-Lock™ Fixture Key, while the 1-3/16"-diameter key fits in the same hole as the Locating Keys shown above. The subplate hole pattern shown above allows mounting any size and combination of Rectangular Tooling Plates, either lengthwise or widthwise.

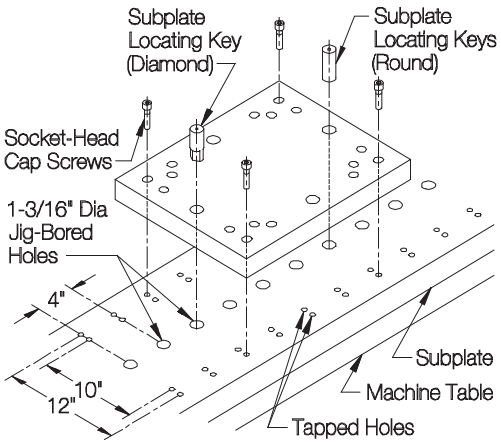

ROUND

PART NO.	A DIA NOMINAL	A DIA ACTUAL	B	C
CL-10-SLKR	5/8	.6250/.6244	2-1/4	—
CL-19-SLKR	1-3/16	1.1875/1.1869	2-7/8	

DIAMOND

CL-10-SLKD	5/8	.6250/.6244	2-1/4	1
CL-19-SLKD	1-3/16	1.1875/1.1869	2-7/8	

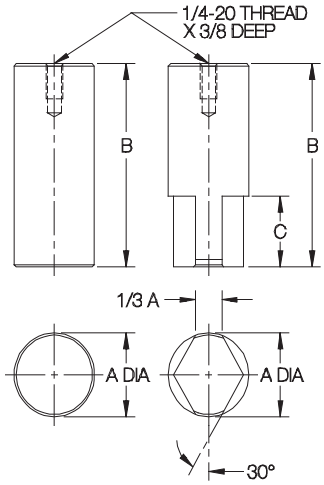

Carr Lane MANUFACTURING CO.
4200 Carr Lane Ct., P.O. Box 191970
St. Louis, Missouri 63119-7970 USA
Phone: 314-647-6200, FAX: 314-647-5736
Web Site: www.carrlane.com

(Rev.10-07)

PALLET FIXTURE KEYS

12L14 STEEL, CARBURIZED-HARDENED, BLACK OXIDE FINISH

Center Pin

Radial Pin

Fixture keys for mounting tooling plates and blocks on standard DIN pallets. Each pallet requires one center pin and one radial pin (for orientation). The radial pin is usually removed after fastening the pallet to the machine table.

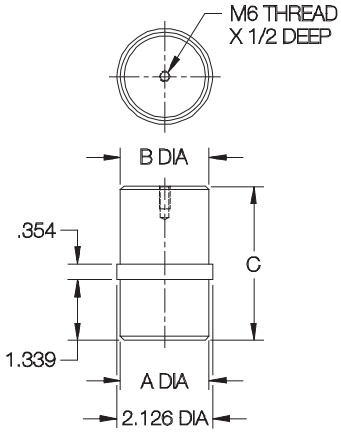

Center Pin

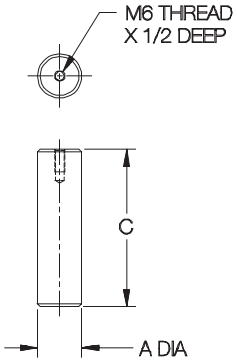

Radial Pin

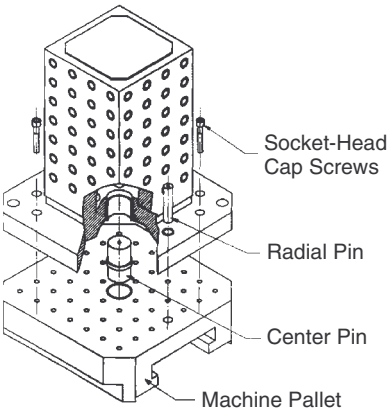

CENTER PINS

PART NO.	A DIA NOMINAL	A DIA ACTUAL	B DIA NOMINAL	B DIA ACTUAL	C
CLM-25-PFKC	50mm	1.9681/1.9676	25mm	.9839/.9835	2.87
CLM-30-PFKC			30mm	1.1808/1.1804	3.42
CLM-50-PFKC			50mm	1.9681/1.9676	

RADIAL PINS

PART NO.	A DIA NOMINAL	A DIA ACTUAL	C
CLM-20-PFKR	20mm	.7871/.7867	3.50
CLM-25-PFKR	25mm	.9839/.9835	4.92

MILL FIXTURE KEYS

12L14 STEEL, CARBURIZED-HARDENED, BLACK OXIDE FINISH

Can be removed from above after mounting fixture on machine. Fits either 11/16 or 13/16 table slots by turning 90°. Install in a 7/8 reamed hole. Concentricity .0005 or better.

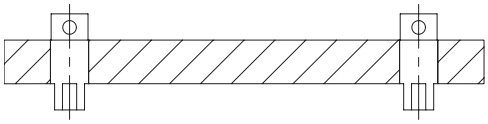

USA

PART NO.	TABLE SLOT SIZES	A	C	E	F
CL-1-MFK-1	11/16 or 13/16	.6873	.8123	1.00	2.20
CL-1-MFK-2				3.20	4.40

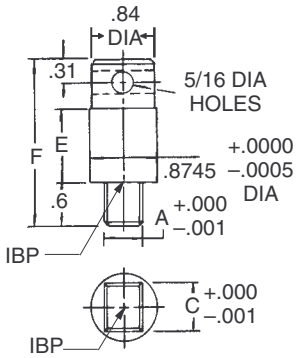

MANUFACTURING CO.
4200 Carr Lane Ct., P.O. Box 191970
St. Louis, Missouri 63119-7970 USA
Phone: 314-647-6200, FAX: 314-647-5736
Web Site: www.carrlane.com

(Rev. 8-10)

FORGED ADJUSTABLE CLAMPS

FORGED C1045 STEEL, BLACK OXIDE FINISH

Rugged forged steel pivot clamp. Instant height adjustment without blocks or shims. One-piece assembly allows quick setups and eliminates lost clamp pieces. Removable brass heel protects machine table. Clamp can swing 90° in either direction for loading clearance.

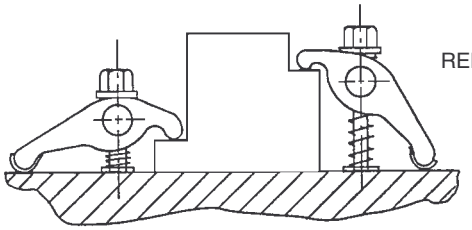

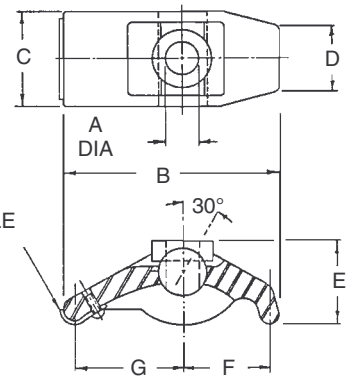

CLAMP STRAPS

PART NO.	STUD SIZE	CLAMPING RANGE	A DIA	B	C	D	E	F	G
CL-6-FAC	5/16, 3/8, M8, or M10	0 to 1-3/4	7/16	3-1/4	1-1/4	7/8	1	1-1/8	1-7/8
CL-8-FAC	1/2 or M12	0 to 2-1/16	9/16	4	1-5/8	1-1/8	1-7/16	1-7/16	2-5/16
CL-10-FAC	5/8 or M16	0 to 3	11/16	5-1/2	1-7/8	1-3/8	1-7/8	2	3-1/4
CL-12-FAC	3/4 or M20	0 to 4-1/4	13/16	6-1/4	2-5/8	2	2-1/4	2-1/8	3-1/2
CL-16-FAC	7/8,1, or M24	0 to 5-1/2	1-1/16	7	3-1/8	2-3/8	2-7/16	2-1/4	4

Assembly with Flange Nut
CL-x-FACA-FN

Assembly with Hand Knob
CL-x-FACA-HK

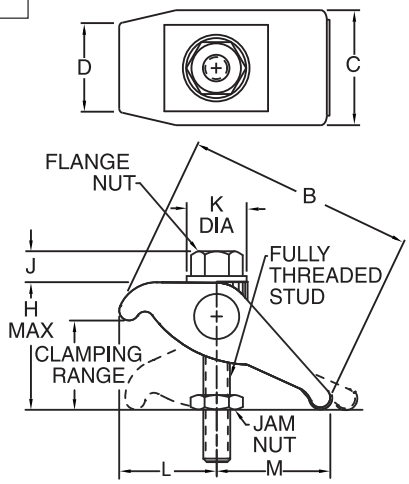

ASSEMBLIES (USA)

PART NO.	STUD SIZE	CLAMPING RANGE	H	J	K DIA	L MIN	L MAX	M MIN	M MAX	FORGED ADJUSTABLE CLAMP	FULLY THREADED STUD	JAM NUT	FLANGE NUT
CL-5-FACA-FN	5/16-18	0 to 1-3/4	2-1/8	3/8	3/4	1-1/16	1-1/4	1-3/4	2	CL-6-FAC	CL-5/16-18x3.00-FTS	CL-5-JN	CL-9-FN
CL-6-FACA-FN	3/8-16			1/2	7/8						CL-3/8-16x3.00-FTS	CL-6-JN	CL-2-FN
CL-8-FACA-FN	1/2-13	0 to 2-1/16	2-5/8	11/16	1-1/8	1-3/8	1-9/16	2-1/8	2-7/16	CL-8-FAC	CL-1/2-13x4.00-FTS	CL-8-JN	CL-3-FN
CL-10-FACA-FN	5/8-11	0 to 3	3-3/4	13/16	1-3/8	1-13/16	2-1/8	2-15/16	3-3/8	CL-10-FAC	CL-5/8-11x5.00-FTS	CL-10-JN	CL-4-FN
CL-12-FACA-FN	3/4-10	0 to 4/1/4	5-3/8	1	1-5/8	2-1/8	2-7/16	3-5/16	3-13/16	CL-12-FAC	CL-3/4-10x7.00-FTS	CL-12-JN	CL-5-FN
CL-14-FACA-FN	7/8-9	0 to 5-1/2	7	1-1/8	1-3/4	2-1/4	2-5/8	3-13/16	4-3/8	CL-16-FAC	CL-7/8-9x8.00-FTS	CL-14-JN	CL-6-FN
CL-18-FACA-FN	1"-8			1-1/4	2						CL-1-8x8.00-FTS	CL-16-JN	CL-7-FN

ASSEMBLIES (METRIC)

CLM-5-FACA-FN	M8	0 to 1-3/4	2-1/8	.39	.75	1-1/16	1-1/4	1-3/4	2	CL-6-FAC	CLM-8x80-FTS	CLM-8-JN	CLM-8-FN
CLM-6-FACA-FN	M10			.51	.87						CLM-10x80-FTS	CLM-10-JN	CLM-10-FN
CLM-8-FACA-FN	M12	0 to 2-1/16	2-5/8	.67	1.10	1-3/8	1-9/16	2-1/8	2-7/16	CL-8-FAC	CLM-12x110-FTS	CLM-12-JN	CLM-12-FN
CLM-10-FACA-FN	M16	0 to 3	3-3/4	.83	1.34	1-13/16	2-1/8	2-15/16	3-3/8	CL-10-FAC	CLM-16x125-FTS	CLM-16-JN	CLM-16-FN
CLM-12-FACA-FN	M20	0 to 4/1/4	5-3/8	.98	1.61	2-1/8	2-7/16	3-5/16	3-13/16	CL-12-FAC	CLM-20x175-FTS	CLM-20-JN	CLM-20-FN
CLM-16-FACA-FN	M24	0 to 5-1/2	7	1.26	2.01	2-1/4	2-5/8	3-13/16	4-3/8	CL-16-FAC	CLM-24x200-FTS	CLM-24-JN	CLM-24-FN

Carr Lane®
MANUFACTURING CO.
4200 Carr Lane Ct., P.O. Box 191970
St. Louis, Missouri 63119-7970 USA
Phone: 314-647-6200, FAX: 314-647-5736
Web Site: www.carrlane.com

(Rev. 7-10)

ALUMINUM ADJUSTABLE CLAMPS

VAR-A-CLAMPS

TENZALOY ALUMINUM ALLOY

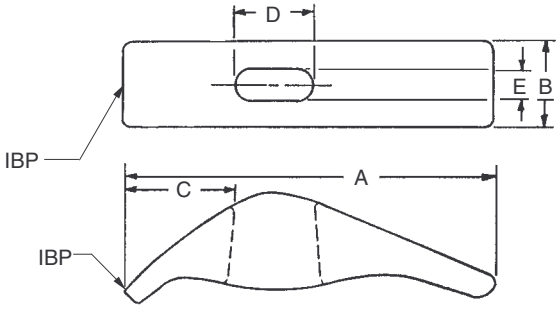

Simple, economical aluminum clamp, similar in function to the Forged Adjustable Clamps shown above.

PART NO.	STUD SIZE	CLAMPING RANGE	A	B	C	D	E
CL-8-VAC	3/8 or M10	0 to 2"	4-7/8	1-1/4	1-3/8	1	13/32
CL-10-VAC	1/2 or M12	0 to 2-1/2"	5-1/2	1-1/2	1-1/2	1-1/8	17/32

FORGED U CLAMPS

FORGED STEEL, 70,000 PSI YIELD STRENGTH, BLACK OXIDE FINISH

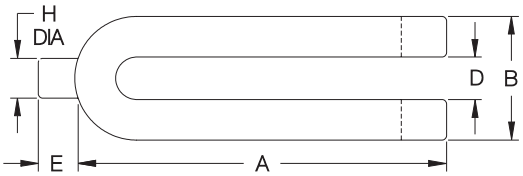

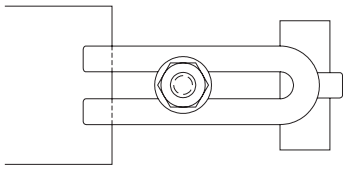

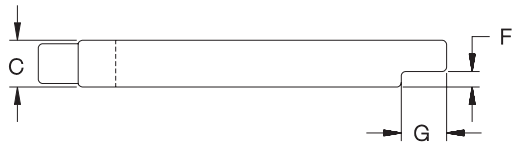

Open U end allows totally removing clamp strap when unclamped. Clamp tips are stepped to provide repeatable location.

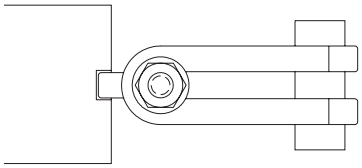

Cylindrical pin end minimizes contact area and is useful for clamping in horizontal holes.

PART NO.	BOLT SIZE	A	B	C	D	E	F	G	H
CL-4-FUC	5/8-11 or M16	3-1/2	1-15/16	3/4	11/16	5/8	1/4	1/2	5/8
CL-6-FUC		5-7/16	2-1/4	7/8	11/16	3/4	5/16	3/4	3/4
CL-8-FUC	3/4-10 or M20	7-3/8	2-5/8	1-1/8	13/16	27/32	3/8	1-1/32	13/16
CL-12-FUC	1"-8 or M24	10-15/16	3-3/16	1-3/8	1-1/16	1-3/32	1/2	1-3/16	1-1/32

Carr Lane®
MANUFACTURING CO.
4200 Carr Lane Ct., P.O. Box 191970
St. Louis, Missouri 63119-7970 USA
Phone: 314-647-6200, FAX: 314-647-5736
Web Site: www.carrlane.com

(Rev. 12-07)

SLOTTED-HEEL CLAMP STRAPS

STEEL: 1018, CARBURIZED-HARDENED, BLACK OXIDE FINISH
STAINLESS STEEL: 300 SERIES

Steel and Stainless Steel

Popular Clamp Strap with a slot underneath to allow sliding it straight back for clear loading. Two drill spots on the sides provide a secure grip for retracting the clamp. Available in steel for 1/4-20 (M6) to 3/4-10 (M20) stud sizes, or stainless steel for #10-32 to 3/8-16 stud sizes. Each size is available in several strap lengths.

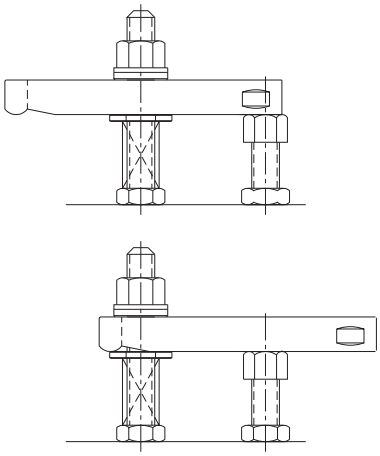

See pages 182-184 for complete assemblies using these Clamp Straps.

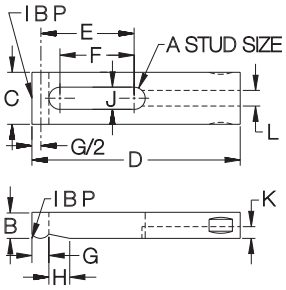

See pages 51-54MF for stackable high-rise clamp-strap assemblies.

STRAPS — STEEL

PART NO.	A	B	C	D	E	F	G	H	J	K	L
CL-0-CS	1/4-20 or M6	3/8	5/8	2	27/32	19/32	1/4	11/32	9/32	5/32	3/16
CL-1-CS				2-1/2	1-3/32	13/16					
CL-1A-CS	5/16-18 or M8	1/2	3/4	2-1/2	27/32	1/2	5/16	7/16	11/32	7/32	1/4
CL-1B-CS				3	1-11/32	1					
CL-2-CS	3/8-16 or M10	1/2	1-1/8	3	1-9/32	7/8	13/32	1/2	27/64	9/32	3/8
CL-3A-CS				3-1/2	1-17/32	1-1/8					
CL-3-CS				4	1-25/32	1-3/8					
CL-4-CS				5	2-9/32	1-7/8					
CL-5-CS				6	2-25/32	2-3/8					
CL-6A-CS	1/2-13 or M12	5/8	1-1/4	3-1/2	1-1/2	1-1/32	13/32	1/2	17/32	9/32	3/8
CL-6-CS				4	1-3/4	1-9/32					
CL-8-CS				5	2-1/4	1-25/32					
CL-10-CS				6	2-3/4	2-9/32					
CL-15A-CS	5/8-11 or M16	7/8	1-1/2	4	1-11/16	1-3/32	1/2	19/32	21/32	9/32	1/2
CL-16-CS				5	2-3/16	1-19/32					
CL-18-CS				6	2-11/16	2-3/32					
CL-18A-CS				6-1/2	2-15/16	2-11/32					
CL-19-CS	3/4-10 or M20	1	1-3/4	6	2-5/8	2	1/2	19/32	13/16	5/16	1/2
CL-21-CS				7	3-1/8	2-9/16					
CL-22A-CS				8	3-5/8	3-1/8					

STRAPS — STAINLESS, MINIATURE

CL-17215	#10-32	1/4	1/2	1-1/2	21/32	15/32	3/16	5/16	7/32	3/32	7/32
CL-17220				2	29/32	23/32					
CL-17320	1/4-20	3/8	5/8	2	7/8	11/16	1/4	3/8	9/32	1/8	9/32
CL-17325				2-1/2	1-1/8	15/16					
CL-17420	5/16-18	3/8	3/4	2	27/32	19/32	5/16	7/16	11/32	5/32	11/32
CL-17425				2-1/2	1-3/32	27/32					
CL-17430				3	1-11/32	1-3/32					
CL-17530	3/8-16	1/2	1	3	1-5/16	1	3/8	1/2	13/32	3/16	13/32
CL-17540				4	1-13/16	1-1/2					

Carr Lane®
MANUFACTURING CO.
4200 Carr Lane Ct., P.O. Box 191970
St. Louis, Missouri 63119-7970 USA
Phone: 314-647-6200, FAX: 314-647-5736
Web Site: www.carrlane.com

(Rev. 12-07)

SLOTTED-HEEL CLAMP STRAPS

SEE PAGES 59, 69, 214-219, 221 AND 231-232 FOR MATERIAL SPECIFICATIONS

A complete clamp-strap assembly using a slotted-heel strap from page 229. Select any of the six nut/knob combinations shown below by adding the appropriate suffix to the part number. Other Stud and Clamp Rest lengths are available (order pieces individually).

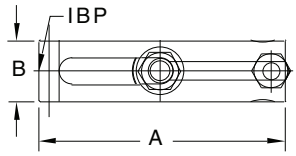

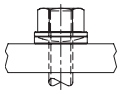

Spherical Nut & Washer CL-xx-SHA-1

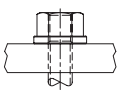

Flange Nut CL-xx-SHA-2

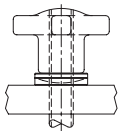

Hand Knob with Spherical Washer CL-xx-SHA-4

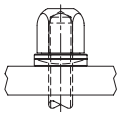

Acorn Nut with Spherical Washer CL-xx-SHA-5

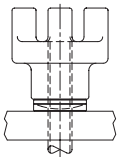

Bar Knob with Spherical Washer* CL-xx-SHA-6

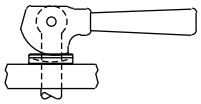

Cam Handle with Spherical Washer (See page 192)

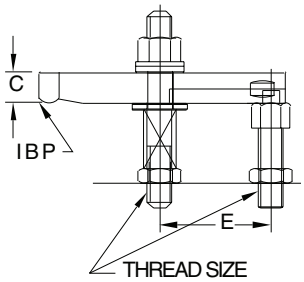

ASSEMBLIES — STEEL (USA)

PART NO.	THREAD SIZE	A	B	C	E	CLAMP STRAP	CLAMP REST	SPRING	FLAT WASHER	STUD
CL-0-SHA-x	1/4-20	2	5/8	3/8	27/32	CL-0-CS	CL-1-CR	CL-5-SPG	CL-7-FW	CL-1/4-20x2.50-STUD
CL-1-SHA-x		2-1/2			1-3/32	CL-1-CS				
CL-1A-SHA-x	5/16-18	2-1/2	3/4	1/2	27/32	CL-1A-CS	CL-1A-CR	CL-6-SPG	CL-14-FW	CL-5/16-18x 3.00-STUD
CL-1B-SHA-x		3			1-11/32	CL-1B-CS				
CL-2-SHA-x	3/8-16	3	1-1/8	1/2	1-9/32	CL-2-CS	CL-2-CR	CL-7-SPG	CL-1-FW	CL-3/8-16x3.00-STUD
CL-3-SHA-x		3-1/2			1-17/32	CL-3A-CS				
CL-4-SHA-x		4			1-25/32	CL-3-CS				
CL-6-SHA-x		5			2-9/32	CL-4-CS				
CL-8-SHA-x		6			2-25/32	CL-5-CS				
CL-9-SHA-x	1/2-13	3-1/2	1-1/4	5/8	1-1/2	CL-6A-CS	CL-4-CR	CL-9-SPG	CL-2-FW	CL-1/2-13x4.00-STUD
CL-10-SHA-x		4			1-3/4	CL-6-CS				
CL-12-SHA-x		5			2-1/4	CL-8-CS				
CL-14-SHA-x		6			2-3/4	CL-10-CS				
CL-20-SHA-x	5/8-11	4	1-1/2	7/8	1-11/16	CL-15A-CS	CL-6-CR	CL-11-SPG	CL-3-FW	CL-5/8-11x4.50-STUD
CL-22-SHA-x		5			2-3/16	CL-16-CS				
CL-24-SHA-x		6			2-11/16	CL-18-CS				
CL-25-SHA-x		6-1/2			2-15/16	CL-18A-CS				
CL-27-SHA-x	3/4-10	6	1-3/4	1	2-5/8	CL-19-CS	CL-8-CR	CL-13-SPG	CL-4-FW	CL-3/4-10x5.00-STUD
CL-29-SHA-x		7			3-1/8	CL-21-CS				
CL-31-SHA-x		8			3-5/8	CL-22A-CS				

ASSEMBLIES — STEEL (METRIC)

CLM-0-SHA-x	M6	2	5/8	3/8	27/32	CL-0-CS	CLM-1-CR	CL-5-SPG	CL-7-FW	CLM-6x65-STUD
CLM-1-SHA-x		2-1/2			1-3/32	CL-1-CS				
CLM-1A-SHA-x	M8	2-1/2	3/4	1/2	27/32	CL-1A-CS	CLM-1A-CR	CL-6-SPG	CL-14-FW	CLM-8x80-STUD
CLM-1B-SHA-x		3			1-11/32	CL-1B-CS				
CLM-2-SHA-x	M10	3	1-1/8	1/2	1-9/32	CL-2-CS	CLM-2-CR	CL-7-SPG	CL-1-FW	CLM-1x80-STUD
CLM-3-SHA-x		3-1/2			1-17/32	CL-3A-CS				
CLM-4-SHA-x		4			1-25/32	CL-3-CS				
CLM-6-SHA-x		5			2-9/32	CL-4-CS				
CLM-8-SHA-x		6			2-25/32	CL-5-CS				
CLM-9-SHA-x	M12	3-1/2	1-1/4	5/8	1-1/2	CL-6A-CS	CLM-4-CR	CL-9-SPG	CL-2-FW	CLM-12x95-STUD
CLM-10-SHA-x		4			1-3/4	CL-6-CS				
CLM-12-SHA-x		5			2-1/4	CL-8-CS				
CLM-14-SHA-x		6			2-3/4	CL-10-CS				
CLM-20-SHA-x	M16	4	1-1/2	7/8	1-11/16	CL-15A-CS	CLM-5-CR	CL-11-SPG	CL-3-FW	CLM-16x110-STUD
CLM-22-SHA-x		5			2-3/16	CL-16-CS				
CLM-24-SHA-x		6			2-11/16	CL-18-CS				
CLM-25-SHA-x		6-1/2			2-15/16	CL-18A-CS				
CLM-27-SHA-x	M20	6	1-3/4	1	2-5/8	CL-19-CS	CLM-8-CR	CL-13-SPG	CLM-10-FW	CLM-20x125-STUD
CLM-29-SHA-x		7			3-1/8	CL-21-CS				
CLM-31-SHA-x		8			3-5/8	CL-22A-CS				

* Available in thread sizes 3/8-16 and above (M10 and above in metric).

Carr Lane®
MANUFACTURING CO.
4200 Carr Lane Ct., P.O. Box 191970
St. Louis, Missouri 63119-7970 USA
Phone: 314-647-6200, FAX: 314-647-5736
Web Site: www.carrlane.com

(Rev. 12-07)

SLOTTED-HEEL CLAMP STRAPS

SEE PAGES 215, 217-218, 228, 230-232, AND 181 FOR MATERIAL SPECIFICATIONS

Straddle Cam Steel

A complete clamp-strap assembly using a slotted-heel strap from page 181 along with a Double Cam and Eyebolt. Other Eyebolt and Clamp Rest lengths are available (order pieces individually).

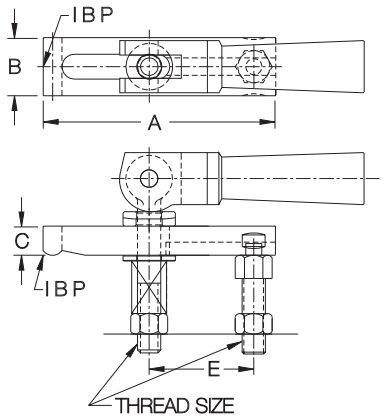

ASSEMBLIES — STRADDLE CAM, STEEL (USA)

PART NO.	THREAD SIZE	A	B	C	E	CLAMP STRAP	CLAMP REST	SPRING	EYE BOLT	CAM HANDLE AND CLEVIS PIN	FLAT WASHER	SPHERICAL WASHER
CL-0-SCA	1/4-20	2	5/8	3/8	27/32	CL-0-CS	CL-1-CR	CL-5-SPG	CL-25-EB	CL-11-CH CL-610-CLVP	CL-7-FW	CL-1-SW
CL-1-SCA		2-1/2			1-3/32	CL-1-CS						
CL-1A-SCA	5/16-18	2-1/2	3/4	1/2	27/32	CL-1A-CS	CL-1A-CR	CL-6-SPG	CL-31-EB	CL-11A-CH CL-810-CLVP	CL-14-FW	CL-11-SW
CL-1B-SCA		3			1-11/32	CL-1B-CS						
CL-2-SCA	3/8-16	3	1-1/8	1/2	1-9/32	CL-2-CS	CL-2-CR	CL-7-SPG	CL-38-EB	CL-12-CH CL-1014-CLVP	CL-1-FW	CL-2-SW
CL-2A-SCA		3-1/2			1-17/32	CL-3A-CS						
CL-3-SCA		4			1-25/32	CL-3-CS						
CL-4-SCA		5			2-9/32	CL-4-CS						
CL-5-SCA		6			2-25/32	CL-5-CS						
CL-6A-SCA	1/2-13	3-1/2	1-1/4	5/8	1-1/2	CL-6A-CS	CL-4-CR	CL-9-SPG	CL-50-EB	CL-13-CH CL-1218-CLVP	CL-2-FW	CL-3-SW
CL-6-SCA		4			1-3/4	CL-6-CS						
CL-8-SCA		5			2-1/4	CL-8-CS						
CL-9A-SCA		6			2-3/4	CL-10-CS						
CL-17-SCA	5/8-11	4	1-1/2	7/8	1-11/16	CL-15A-CS	CL-6-CR	CL-11-SPG	CL-62-EB	CL-14-CH CL-2020-CLVP	CL-3-FW	CL-4-SW
CL-19-SCA		5			2-3/16	CL-16-CS						
CL-21-SCA		6			2-11/16	CL-18-CS						
CL-22-SCA		6-1/2			2-15/16	CL-18A-CS						
CL-24-SCA	3/4-10	6	1-3/4	1	2-5/8	CL-19-CS	CL-8-CR	CL-13-SPG	CL-75-EB	CL-15-CH CL-2024-CLVP	CL-4-FW	CL-5-SW
CL-26-SCA		7			3-1/8	CL-21-CS						
CL-28-SCA		8			3-5/8	CL-22A-CS						

ASSEMBLIES — STRADDLE CAM, STEEL (METRIC)

CLM-0-SCA	M6	2	5/8	3/8	27/32	CL-0-CS	CLM-1-CR	CL-5-SPG	CLM-25A-EB	CLM-11-CH CLM-616-CLVP	CL-7-FW	CL-1-SW
CLM-1-SCA		2-1/2			1-3/32	CL-1-CS						
CLM-2-SCA	M10	3	1-1/8	1/2	1-9/32	CL-2-CS	CLM-2-CR	CL-7-SPG	CLM-40-EB	CLM-12-CH CLM-1023-CLVP	CL-1-FW	CL-2-SW
CLM-2A-SCA		3-1/2			1-17/32	CL-3A-CS						
CLM-3-SCA		4			1-25/32	CL-3-CS						
CLM-4-SCA		5			2-9/32	CL-4-CS						
CLM-5-SCA		6			2-25/32	CL-5-CS						
CLM-6A-SCA	M12	3-1/2	1-1/4	5/8	1-1/2	CL-6A-CS	CLM-4-CR	CL-9-SPG	CLM-50A-EB	CLM-13-CH CLM-1229-CLVP	CL-2-FW	CL-3-SW
CLM-6-SCA		4			1-3/4	CL-6-CS						
CLM-8-SCA		5			2-1/4	CL-8-CS						
CLM-9A-SCA		6			2-3/4	CL-10-CS						
CLM-17-SCA	M16	4	1-1/2	7/8	1-11/16	CL-15A-CS	CLM-5-CR	CL-11-SPG	CLM-62-EB	CLM-14-CH CLM-1632-CLVP	CL-3-FW	CL-4-SW
CLM-19-SCA		5			2-3/16	CL-16-CS						
CLM-21-SCA		6			2-11/16	CL-18-CS						
CLM-22-SCA		6-1/2			2-15/16	CL-18A-CS						
CLM-24-SCA	M20	6	1-3/4	1	2-5/8	CL-19-CS	CLM-8-CR	CL-13-SPG	CLM-76A-EB	CLM-15-CH CLM-2038-CLVP	CLM-10-FW	CLM-20-SW
CLM-26-SCA		7			3-1/8	CL-21-CS						
CLM-28-SCA		8			3-5/8	CL-22A-CS						

Carr Lane®
MANUFACTURING CO.
4200 Carr Lane Ct., P.O. Box 191970
St. Louis, Missouri 63119-7970 USA
Phone: 314-647-6200, FAX: 314-647-5736
Web Site: www.carrlane.com

(Rev. 9-09)

SLOTTED-HEEL CLAMP STRAPS

SEE PAGES 73, 215-216, 218, 222, 231-232, AND 181 FOR MATERIAL SPECIFICATIONS

Stainless Steel (Miniature)

A complete clamp-strap assembly using a stainless steel slotted-heel strap from page 181. Select any of the four nut/knob combinations shown below by adding the appropriate suffix to the part number. Fixture Stud has a thread-locking interference thread at the bottom end to install permanently in a fixture plate.

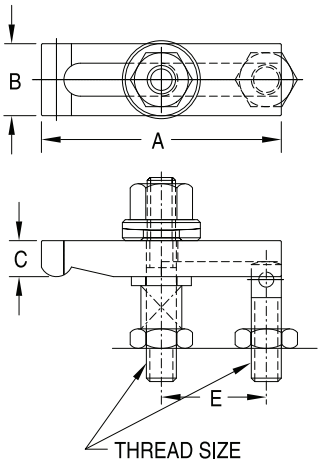

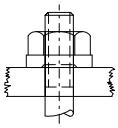

Flange Nut

CL-xxxx-1

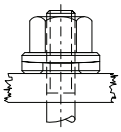

Spherical Nut and Washer

CL-xxxx-2

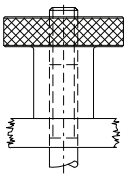

Knurled Knob

CL-xxxx-3

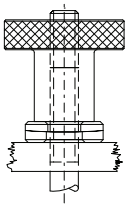

Knurled Knob and Spherical Washer

CL-xxxx-4

ASSEMBLIES — STAINLESS, MINIATURE (USA)

PART NO.	THREAD SIZE	A	B	C	E	CLAMP STRAP	CLAMP REST	SPRING	FLAT WASHER	STUD	JAM NUT
CL-2715-x	#10-32	1-1/2	1/2	1/4	21/32	CL-17215	CL-13410	CL-2430.7	CL-254	CL-11415	CL-3-FJN-S
CL-2720-x		2			29/32	CL-17220					
CL-2820-x	1/4-20	2	5/8	3/8	7/8	CL-17320	CL-13515	CL-2440.7	CL-255	CL-11520	CL-4-JN-S
CL-2825-x		2-1/2			1-1/8	CL-17325					
CL-2920-x	5/16-18	2	3/4	3/8	27/32	CL-17420	CL-13612	CL-2450.7	CL-256	CL-11620	CL-5-JN-S
CL-2925-x		2-1/2			1-3/32	CL-17425					
CL-2930-x		3			1-11/32	CL-17430					
CL-3030-x	3/8-16	3	1	1/2	1-5/16	CL-17530	CL-13717	CL-2461.0	CL-257	CL-11725	CL-6-JN-S
CL-3040-x		4			1-13/16	CL-17540					

CarrLane®
MANUFACTURING CO.
4200 Carr Lane Ct., P.O. Box 191970
St. Louis, Missouri 63119-7970 USA
Phone: 314-647-6200, FAX: 314-647-5736
Web Site: www.carrlane.com

(Rev. 11-09)

SLOTTED-HEEL GOOSENECK CLAMP STRAPS

NEW!

STRAP: ALLOY STEEL, BLACK OXIDE FINISH

SEE PAGES 59, 69, 214-219, AND 231-232 FOR OTHER MATERIAL SPECIFICATIONS

Gooseneck version of our Slotted-Heel Clamp Straps. This design recesses the clamping nut to provide a low overall profile. Slotted-Heel Clamp Straps have a slot underneath to slide straight back for clear loading. An indentation at the rear of each side provides a secure finger grip for retracting the clamp. Available to fit 1/2-13 studs (M12 in metric).

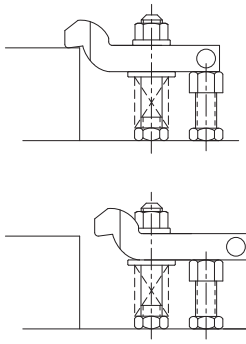

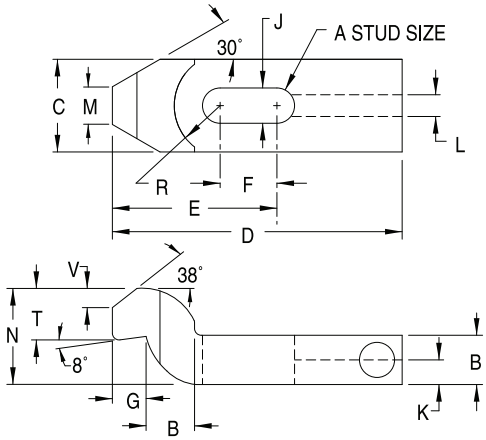

STRAPS – STEEL

PART NO.	A	B	C	D	E	F	G	J	K	L	M	N	R	T	V
CL-85-GCS	1/2 OR M12	.79	1.57	4.92	2.87	1.02	.63	.55	.34	.38	.79	1.57	.79	.90	.34

Slotted-Heel Gooseneck Clamp Straps are also available as a complete assembly. Select any of the five nut/knob combinations shown below by adding the appropriate suffix to the part number. Other lengths of Clamping Studs and Clamp Rests are available (order pieces individually).

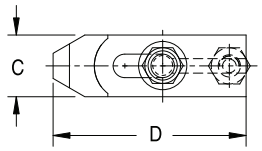

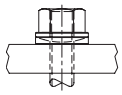

Spherical Nut & Washer CL-xx-GCSA-1

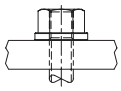

Flange Nut CL-xx-GCSA-2

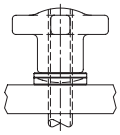

Hand Knob with Spherical Washer CL-xx-GCSA-4

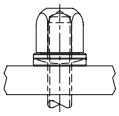

Acorn Nut with Spherical Washer CL-xx-GCSA-5

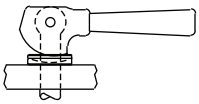

Cam Handle with Spherical Washer CL-xx-GCSA-7

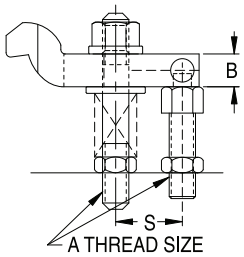

ASSEMBLIES – STEEL (USA)

PART NO.	A	B	C	D	S	CLAMP STRAP	CLAMP REST	SPRING	FLAT WASHER	STUD	JAM NUT
CL-85-GCSA-X	1/2 OR M12	.79	1.57	5.91	2.75	CL-85-GCS	CL-4-CR	CL-9-SPG	CL-2-FW	CL-1/2-13X4.00-STUD	CL-8-JN

ASSEMBLIES – STEEL (METRIC)

PART NO.	A	B	C	D	S	CLAMP STRAP	CLAMP REST	SPRING	FLAT WASHER	STUD	JAM NUT
CLM-85-GCSA-X	1/2 OR M12	.79	1.57	5.91	2.75	CL-85-GCS	CL-4-CR	CL-9-SPG	CL-2-FW	CL-1/2-13X4.00-STUD	CL-12-JN

Carr Lane MANUFACTURING CO.
4200 Carr Lane Ct., P.O. Box 191970
St. Louis, Missouri 63119-7970 USA
Phone: 314-647-6200, FAX: 314-647-5736
Web Site: www.carrlane.com

(Rev. 2-10)

SLOTTED-HEEL PADDED CLAMP STRAPS

STRAP: 1018 STEEL, CARBURIZED-HARDENED, BLACK OXIDE FINISH
PAD: 1018 STEEL, CARBURIZED-HARDENED, BLACK OXIDE FINISH

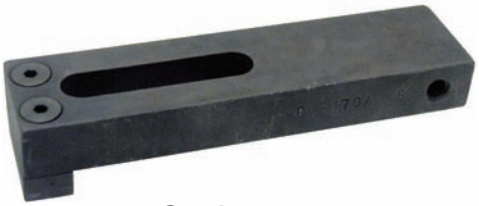

Steel

Slotted-Heel Clamp Strap that features a replaceable clamping pad attached with two screws (furnished). Clamp Strap also easily accepts custom pads or other attachments. Rear end is tapped on either side for a Finger Pin (see page 92). Available for 1/4-20 (M6) to 1/2-13 (M12) stud sizes, most in a choice of several strap lengths.

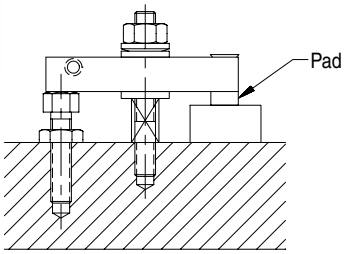

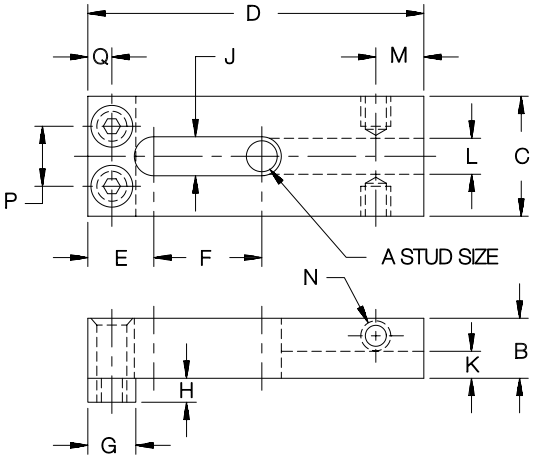

STRAPS — STEEL WITH STEEL PAD

PART NO.	A	B	C	D	E	F	G	H	J	K	L	M	N	P	Q
CL-165-CS	1/4-20 or M6	3/8	5/8	2	3/8	5/8	1/4	1/8	9/32	5/32	1/4			11/32	9/64
CL-166-CS	3/8-16 or M10	5/8	1-1/4	3-1/2	11/16	1-1/8	1/2	1/4	27/64	9/32	3/8	1/2	5/16-18	5/8	1/4
CL-168-CS				4-1/2		1-5/8									
CL-169-CS	1/2-13 or M12	3/4	1-1/2	4-1/2	7/8	1-1/4	5/8	3/8	17/32	9/32	3/8	1/2	5/16-18	3/4	5/16
CL-170A-CS				6		2									

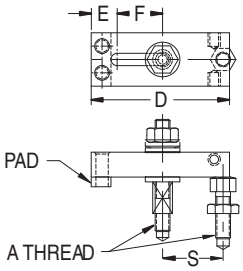

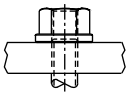

Spherical Nut & Washer CL-xx-SHPA-1

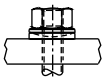

Flange Nut CL-xx-SHPA-2

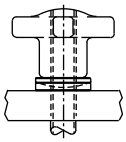

Hand Knob with Spherical Washer CL-xx-SHPA-4

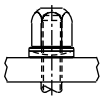

Acorn Nut with Spherical Washer CL-xx-SHPA-5

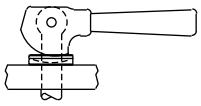

Cam Handle with Spherical Washer CL-xx-SPHA-7

ASSEMBLIES — STEEL WITH STEEL PAD (USA)

PART NO.	A	D	E	F	S	CLAMP STRAP	CLAMP REST	SPRING	FLAT WASHER	CLAMPING STUD
CL-165-SHPA-x	1/4-20	2	3/8	5/8	7/8	CL-165-CS	CL-1-CR	CL-5-SPG	CL-7-FW	CL-1/4-20x2.50-STUD
CL-166-SHPA-x	3/8-16	3-1/2	11/16	1-1/8	1-7/16	CL-166-CS	CL-2-CR	CL-7-SPG	CL-1-FW	CL-3/8-16x3.00-STUD
CL-168-SHPA-x		4-1/2		1-5/8	1-15/16	CL-168-CS				
CL-169-SHPA-x	1/2-13	4-1/2	7/8	1-1/4	2-1/8	CL-169-CS	CL-4-CR	CL-9-SPG	CL-2-FW	CL-1/2-13x4.00-STUD
CL-170A-SHPA-x		6		2	2-7/8	CL-170A-CS				

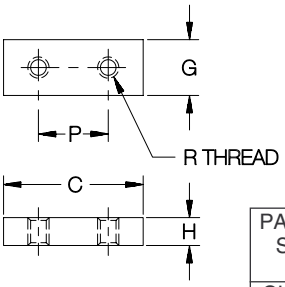

Replacement or optional pads for the Clamp Straps shown above. Available in steel, reinforced plastic, or brass.

REPLACEMENT PADS

PART NO. STEEL PAD	PART NO. PLASTIC PAD	PART NO. BRASS PAD	STUD SIZE	C	G	H	P	R
CL-40-CP	CL-20-CP	CL-30-CP	1/4-20 or M6	5/8	1/4	1/8	11/32	#5-40
CL-42-CP	CL-22-CP	CL-32-CP	3/8-16 or M10	1-1/4	1/2	1/4	5/8	#10-24
CL-43-CP	CL-23-CP	CL-33-CP	1/2-13 or M12	1-1/2	5/8	3/8	3/4	1/4-20

Carr Lane MANUFACTURING CO.
4200 Carr Lane Ct., P.O. Box 191970
St. Louis, Missouri 63119-7970 USA
Phone: 314-647-6200, FAX: 314-647-5736
Web Site: www.carrlane.com

(Rev. 12-07)

TAPPED-HEEL CLAMP STRAPS

STEEL: 1018, CARBURIZED-HARDENED, BLACK OXIDE FINISH
STAINLESS STEEL: 300 SERIES

Steel and Stainless Steel

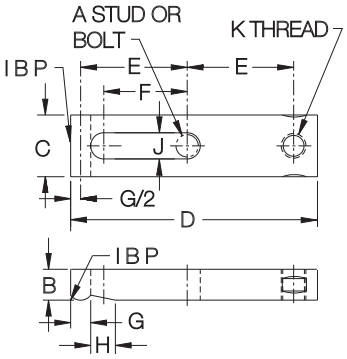

Popular Clamp Strap with a tapped heel that accepts a clamping screw or rear support. Often used with a Guide Block to allow sliding the strap straight back for clear loading. Two drill spots on the sides provide a secure grip for retracting the clamp. Can also be used with a Stud Leveling Foot as a rear support (see pages 144-145).

Available in steel for 1/4-20 to 3/4-10 stud sizes (M6 to M20 in metric), or stainless steel for #10-32 to 3/8-16 stud sizes. Each size is available in several strap lengths.

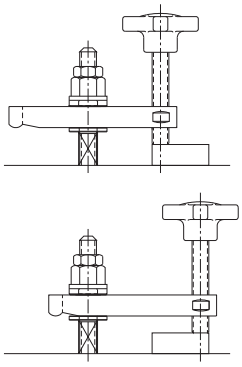

See pages 188-189, 194 for complete assemblies using these clamp straps.

STRAPS — STEEL (USA)

PART NO.	A	B	C	D	E	F	G	H	J	K
CL-61-CS	1/4-20	3/8	5/8	2	13/16	9/16	1/4	11/32	9/32	1/4-20
CL-62-CS				2-1/2	1-1/16	13/16				
CL-63-CS	3/8-16	1/2	1-1/8	3	1-7/32	13/16	13/32	1/2	27/64	3/8-16
CL-65-CS				4	1-23/32	1-5/16				
CL-67-CS				5	2-7/32	1-13/16				
CL-69-CS				6	2-23/32	2-5/16				
CL-70-CS	1/2-13	5/8	1-1/4	3-1/2	1-13/32	15/16	13/32	1/2	17/32	1/2-13
CL-71-CS				4	1-21/32	1-3/16				
CL-72-CS				4-1/2	1-29/32	1-7/16				
CL-73-CS				5	2-5/32	1-11/16				
CL-74-CS				5-1/2	2-13/32	1-15/16				
CL-75-CS				6	2-21/32	2-3/16				
CL-81-CS	5/8-11	7/8	1-1/2	4	1-9/16	1	1/2	19/32	21/32	5/8-11
CL-77-CS				4-1/2	1-13/16	1-1/4				
CL-83-CS				5	2-1/16	1-1/2				
CL-85-CS				6	2-9/16	2				
CL-86-CS				6-1/2	2-13/16	2-1/4				
CL-88-CS	3/4-10	1	1-3/4	6	2-1/2	1-29/32	1/2	19/32	13/16	3/4-10
CL-90-CS				7	3	2-13/32				
CL-92-CS				8	3-1/2	2-29/32				

STRAPS — STEEL (METRIC)

CLM-61-CS	M6	3/8	5/8	2	13/16	9/16	1/4	11/32	9/32	M6
CLM-62-CS				2-1/2	1-1/16	13/16				
CLM-63-CS	M10	1/2	1-1/8	3	1-7/32	13/16	13/32	1/2	27/64	M10
CLM-65-CS				4	1-23/32	1-5/16				
CLM-67-CS				5	2-7/32	1-13/16				
CLM-70-CS	M12	5/8	1-1/4	3-1/2	1-13/32	15/16	13/32	1/2	17/32	M12
CLM-71-CS				4	1-21/32	1-3/16				
CLM-72-CS				4-1/2	1-29/32	1-7/16				
CLM-73-CS				5	2-5/32	1-11/16				
CLM-75-CS				6	2-21/32	2-3/16				
CLM-81-CS	M16	7/8	1-1/2	4	1-9/16	1	1/2	19/32	21/32	M16
CLM-83-CS				5	2-1/16	1-1/2				
CLM-85-CS				6	2-9/16	2				
CLM-88-CS	M20	1	1-3/4	6	2-1/2	1-29/32	1/2	19/32	13/16	M20
CLM-92-CS				8	3-1/2	2-29/32				

STRAPS — STAINLESS, MINIATURE (USA)

CL-18215	#10-32	1/4	1/2	1-1/2	19/32	13/32	3/16	5/16	7/32	#10-32
CL-18220				2	27/32	21/32				
CL-18320	1/4-20	3/8	5/8	2	13/16	19/32	1/4	3/8	9/32	1/4-20
CL-18325				2-1/2	1-1/16	27/32				
CL-18420	5/16-18	3/8	3/4	2	3/4	1/2	5/16	7/16	11/32	5/16-18
CL-18425				2-1/2	1	3/4				
CL-18430				3	1-1/4	1				
CL-18530	3/8-16	1/2	1	3	1-7/32	7/8	3/8	1/2	27/64	3/8-16
CL-18535				3-1/2	1-15/32	1-1/8				
CL-18540				4	1-23/32	1-3/8				

Carr Lane MANUFACTURING CO.
4200 Carr Lane Ct., P.O. Box 191970
St. Louis, Missouri 63119-7970 USA
Phone: 314-647-6200, FAX: 314-647-5736
Web Site: www.carrlane.com

(Rev. 12-07)

TAPPED-HEEL CLAMP STRAPS

SEE PAGES 60, 215-219, 221, 232, AND 187 FOR MATERIAL SPECIFICATION

A complete clamp-strap assembly using a tapped-heel strap from page 187. Select one of two clamping screws or a rear Clamp Rest, as shown below, by adding the appropriate suffix to the part number.

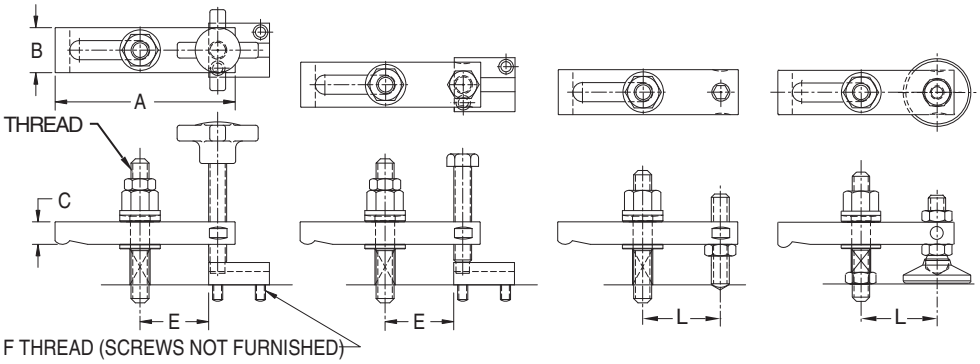

Hand-Knob Clamping Screw CL-xx-THA-HK | Hex-Head Clamping Screw CL-xx-THA-HH | Oval-Point Clamp Rest CL-xx-THA-OP | Leveling Foot CL-xx-THA-LF

ASSEMBLIES — STEEL (USA)

PART NO.	THREAD SIZE	A	B	C	E	F	L	CLAMP STRAP	GUIDE BLOCK*	STUD & SPRING	NUTS	FLAT WASHER
CL-1-THA-xx	1/4-20	2	5/8	3/8	11/16	#6-32	13/16	CL-61-CS	CL-2-GB	CL-1/4-20x2.00-STUD CL-5-SPG	CL-4-JN CL-1-SNW	CL-7-FW
CL-2-THA-xx		2-1/2			15/16		1-1/16	CL-62-CS				
CL-3-THA-xx	3/8-16	3	1-1/8	1/2	1-1/32	#10-32	1-7/32	CL-63-CS	CL-4-GB	CL-3/8-16x3.00-STUD CL-7-SPG	CL-6-JN CL-2-SNW	CL-1-FW
CL-5-THA-xx		4			1-17/32		1-23/32	CL-65-CS				
CL-7-THA-xx		5			2-1/32		2-7/32	CL-67-CS				
CL-9-THA-xx		6			2-17/32		2-23/32	CL-69-CS				
CL-10-THA-xx	1/2-13	3-1/2	1-1/4	5/8	1-5/32	1/4-20	1-13/32	CL-70-CS	CL-6-GB	CL-1/2-13x4.00-STUD CL-9-SPG	CL-8-JN CL-3-SNW	CL-2-FW
CL-11-THA-xx		4			1-13/32		1-21/32	CL-71-CS				
CL-12-THA-xx		4-1/2			1-21/32		1-29/32	CL-72-CS				
CL-13-THA-xx		5			1-29/32		2-5/32	CL-73-CS				
CL-14-THA-xx		5-1/2			2-5/32		2-13/32	CL-74-CS				
CL-15-THA-xx		6			2-13/32		2-21/32	CL-75-CS				
CL-21-THA-xx	5/8-11	4	1-1/2	7/8	1-1/4	1/4-20	1-9/16	CL-81-CS	CL-8-GB	CL-5/8-11x4.00-STUD CL-11-SPG	CL-10-JN CL-4-SNW	CL-3-FW
CL-17-THA-xx		4-1/2			1-1/2		1-13/16	CL-77-CS				
CL-23-THA-xx		5			1-3/4		2-1/16	CL-83-CS				
CL-25-THA-xx		6			2-1/4		2-9/16	CL-85-CS				
CL-26-THA-xx		6-1/2			2-1/2		2-13/16	CL-86-CS				
CL-28-THA-xx	3/4-10	6	1-3/4	1	2-1/8	1/4-20	2-1/2	CL-88-CS	CL-11-GB	CL-3/4-10x5.00-STUD CL-13-SPG	CL-12-JN CL-5-SNW	CL-4-FW
CL-30-THA-xx		7			2-5/8		3	CL-90-CS				
CL-32-THA-xx		8			3-1/8		3-1/2	CL-92-CS				

ASSEMBLIES — STEEL (METRIC)

CLM-1-THA-xx	M6	2	5/8	3/8	11/16	M4	13/16	CLM-61-CS	CL-2-GB	CLM-6x65-STUD CL-5-SPG	CLM-6-JN CLM-6-SNW	CL-7-FW
CLM-2-THA-xx		2-1/2			15/16		1-1/16	CLM-62-CS				
CLM-3-THA-xx	M10	3	1-1/8	1/2	1-1/32	M5	1-1/16	CLM-63-CS	CL-4-GB	CLM-10x80-STUD CL-7-SPG	CLM-10-JN CLM-10-SNW	CL-1-FW
CLM-5-THA-xx		4			1-17/32		1-23/32	CLM-65-CS				
CLM-7-THA-xx		5			2-1/32		2-7/32	CLM-67-CS				
CLM-10-THA-xx	M12	3-1/2	1-1/4	5/8	1-5/32	M6	1-13/32	CLM-70-CS	CL-6-GB	CLM-12x95-STUD CL-9-SPG	CLM-12-JN CLM-12-SNW	CL-2-FW
CLM-11-THA-xx		4			1-13/32		1-21/32	CLM-71-CS				
CLM-12-THA-xx		4-1/2			1-21/32		1-29/32	CLM-72-CS				
CLM-13-THA-xx		5			1-29/32		2-5/32	CLM-73-CS				
CLM-15-THA-xx		6			2-13/32		2-21/32	CLM-75-CS				
CLM-21-THA-xx	M16	4	1-1/2	7/8	1-1/4	M6	1-9/16	CLM-81-CS	CL-8-GB	CLM-16x110-STUD CL-11-SPG	CLM-16-JN CLM-16-SNW	CL-3-FW
CLM-23-THA-xx		5			1-3/4		2-1/16	CLM-83-CS				
CLM-25-THA-xx		6			2-1/4		2-9/16	CLM-85-CS				
CLM-28-THA-xx	M20	6	1-3/4	1	2-1/8	M6	2-1/2	CLM-88-CS	CL-11-GB	CLM-20x125-STUD CL-13-SPG	CLM-20-JN CLM-20-SNW	CLM-10-FW
CLM-32-THA-xx		8			3-1/8		3-1/2	CLM-92-CS				

* Not included on oval-point version

CarrLane® MANUFACTURING CO.
4200 Carr Lane Ct., P.O. Box 191970
St. Louis, Missouri 63119-7970 USA
Phone: 314-647-6200, FAX: 314-647-5736
Web Site: www.carrlane.com

(Rev. 12-07)

TAPPED-HEEL CLAMP STRAPS

SEE PAGES 73, 215,-216, 218, 222, 231-232, AND 187 FOR MATERIAL SPECIFICATIONS

Stainless Steel (Miniature)

A complete clamp-strap assembly using a stainless steel tapped-heel strap from page 187. Fixture Stud has a thread-locking interference thread at the bottom end to install permanently in a fixture plate. Standard assembly includes a Knurled-Head Screw. To order with a rear Clamp Rest instead, add "-1" to the part number (example: CL-3115-1). To order with a Leveling Foot instead, add "-2" to the part number (example: CL-3115-2).

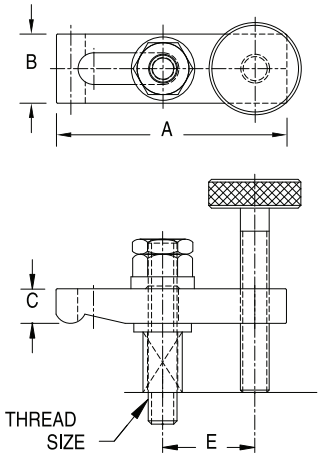

Knurled-Head Screw
CL-xxxx

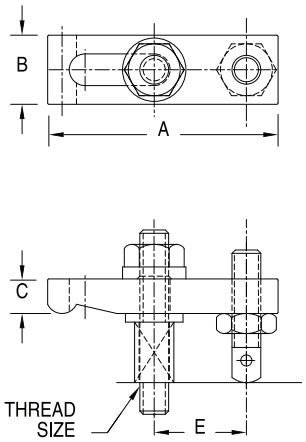

Clamp Rest
CL-xxxx-1

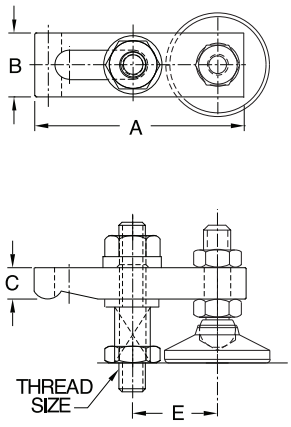

Leveling Foot
CL-xxxx-2

ASSEMBLIES — STAINLESS, MINIATURE (USA)

PART NO. WITH KNURLED HEAD SCREW	THREAD SIZE	A	B	C	E	CLAMP STRAP	KNURLED HEAD SCREW	CLAMP REST	LEVELING FOOT	SPRING	FLAT WASHER	STUD	FLANGE NUT
CL-3115	#10-32	1-1/2	1/2	1/4	19/32	CL-18215	CL-23212	CL-13410	CL-3-SLF-S	CL-2430.7	CL-254	CL-11415	CL-124
CL-3120		2			27/32	CL-18220							
CL-3220	1/4-20	2	5/8	3/8	13/16	CL-18320	CL-23515	CL-13515	CL-4-SLF-S	CL-2440.7	CL-255	CL-11520	CL-125
CL-3225		2-1/2			1-1/16	CL-18325							
CL-3320	5/16-18	2	3/4	3/8	3/4	CL-18420	CL-23620	CL-13612	CL-5-SLF-S	CL-2450.7	CL-256	CL-11620	CL-126
CL-3325		2-1/2			1	CL-18425							
CL-3330		3			1-1/4	CL-18430							
CL-3430	3/8-16	3	1	1/2	1-7/32	CL-18530	CL-23820	CL-13717	CL-6-SLF-S	CL-2461.0	CL-257	CL-11725	CL-127
CL-3435		3-1/2			1-15/32	CL-18535							
CL-3440		4			1-23/32	CL-18540							

Carr Lane®
MANUFACTURING CO.
4200 Carr Lane Ct., P.O. Box 191970
St. Louis, Missouri 63119-7970 USA
Phone: 314-647-6200, FAX: 314-647-5736
Web Site: www.carrlane.com

(Rev. 12-07)

TAPERED-NOSE CLAMP STRAPS

STRAP: 300-SERIES STAINLESS STEEL
SEE PAGES 73, 215-216, 218, 222, 231-232 FOR OTHER MATERIAL SPECIFICATIONS

Stainless Steel (Miniature)

Tapped-Heel Clamp Strap with a tapered nose for clamping in tight spaces. Available in stainless steel for #10-32 to 3/8-16 stud sizes.

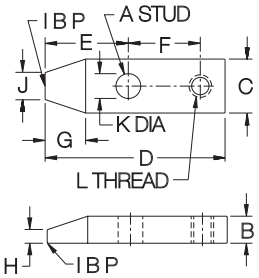

STRAPS — STAINLESS, MINIATURE (USA)

PART NO.	A	B	C	D	E	F	G	H	J	K	L
CL-20215	#10-32	1/4	1/2	1-1/2	11/16	19/32	3/8	1/8	1/4	7/32	#10-32
CL-20220				2	15/16	27/32					
CL-20320	1/4-20	3/8	5/8	2	15/16	13/16	15/32	5/32	5/16	9/32	1/4-20
CL-20325				2-1/2	1-3/16	1-1/16					
CL-20425	5/16-18	3/8	3/4	2-1/2	1-5/32	1	9/16	3/16	3/8	11/32	5/16-18
CL-20535	3/8-16	1/2	1	3-1/2	1-21/32	1-15/32	3/4	1/4	1/2	27/64	3/8-16

Stainless Steel (Miniature)

A complete clamp-strap assembly using one of the straps shown above. Fixture Stud has a thread-locking interference thread at the bottom end to install permanently in a fixture plate. Standard assembly includes a Knurled-Head Screw. To order with a rear Clamp Rest instead, add "-1" to the part number. Example: CL-3915-1.

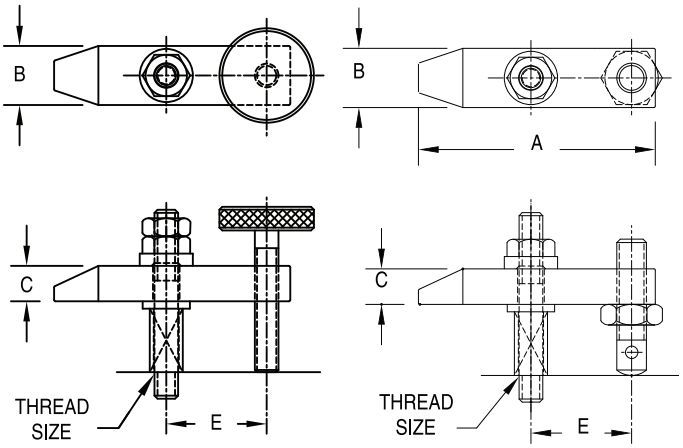

Knurled-Head Screw CL-xxxx

Clamp Rest CL-xxxx-1

ASSEMBLIES — STAINLESS, MINIATURE (USA)

PART NO. WITH KNURLED HEAD SCREW	PART NO. WITH CLAMP REST	THREAD SIZE	A	B	C	E	CLAMP STRAP	KNURLED HEAD SCREW	CLAMP REST	SPRING	FLAT WASHER	STUD	FLANGE NUT
CL-3915	CL-3915-1	#10-32	1-1/2	1/2	1/4	19/32	CL-20215	CL-23212	CL-13410	CL-2430.7	CL-254	CL-11415	CL-124
CL-3920	CL-3920-1		2			27/32	CL-20220						
CL-4020	CL-4020-1	1/4-20	2	5/8	3/8	13/16	CL-20320	CL-23515	CL-13515	CL-2440.7	CL-255	CL-11520	CL-125
CL-4025	CL-4025-1		2-1/2			1-1/16	CL-20325						
CL-4125	CL-4125-1	5/16-18	2-1/2	3/4	3/8	1	CL-20425	CL-23620	CL-13612	CL-2450.7	CL-256	CL-11620	CL-126
CL-4235	CL-4235-1	3/8-16	3-1/2	1	1/2	1-15/32	CL-20535	CL-23820	CL-13717	CL-2461.0	CL-257	CL-11725	CL-127

Carr Lane®
MANUFACTURING CO.
4200 Carr Lane Ct., P.O. Box 191970
St. Louis, Missouri 63119-7970 USA
Phone: 314-647-6200, FAX: 314-647-5736
Web Site: www.carrlane.com

(Rev. 12-07)

WIDE-NOSE CLAMP STRAPS

STRAP: 300-SERIES STAINLESS STEEL
SEE PAGES 73, 215-216, 218, 222, 231-232 FOR OTHER MATERIAL SPECIFICATIONS

Stainless Steel (Miniature)

Tapped-Heel Clamp Strap with an extra-wide nose. Available in stainless steel for 1/4-20 studs.

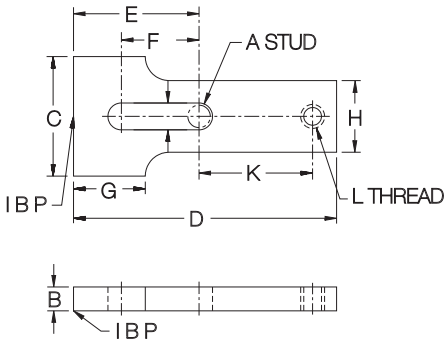

Stainless Steel (Miniature)

STRAPS — STAINLESS, MINIATURE (USA)

PART NO.	A	B	C	D	E	F	G	H	J	K	L
CL-22227	1/4-20	1/4	1-1/4	2-3/4	1-5/16	13/16	3/4	3/4	9/32	1-3/16	1/4-20

A complete clamp-strap assembly using the Clamp Strap shown above. Fixture stud has a thread-locking interference thread at the bottom end to install permanently in a fixture plate. Standard assembly includes a Knurled-Head Screw. To order with a rear Clamp Rest instead, add "-1" to the part number (CL-44227-1). To order with a levelling foot instead, add "-2" to the part number (CL-44227-2).

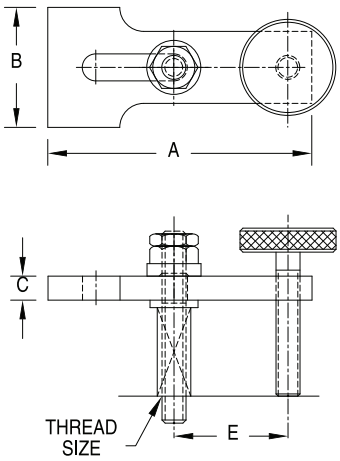

Knurled-Head Screw
CL-xxxx

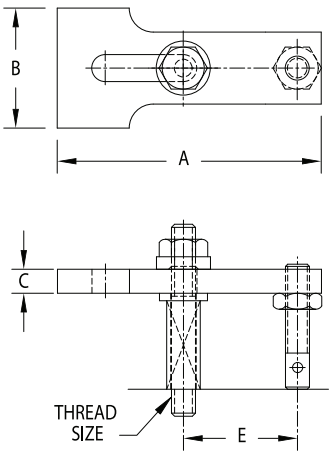

Clamp Rest
CL-xxxx-1

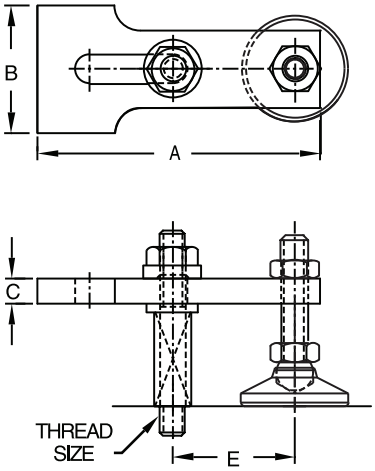

Levelling Foot
CL-xxxx-2

ASSEMBLIES — STAINLESS, MINIATURE (USA)

PART NO. WITH KNURLED HEAD SCREW	THREAD SIZE	A	B	C	E	CLAMP STRAP	KNURLED HEAD SCREW	CLAMP REST	LEVELING FOOT	SPRING	FLAT WASHER	STUD	FLANGE NUT
CL-44227	1/4-20	2-3/4	1-1/4	1/4	1-3/16	CL-22227	CL-23515	CL-13515	CL-13515	CL-2440.7	CL-255	CL-11520	CL-125

CarrLane®
MANUFACTURING CO.
4200 Carr Lane Ct., P.O. Box 191970
St. Louis, Missouri 63119-7970 USA
Phone: 314-647-6200, FAX: 314-647-5736
Web Site: www.carrlane.com

(Rev. 12-07)

FORGED CLAMP STRAPS

FORGED STEEL, 70,000 PSI YIELD STRENGTH, BLACK OXIDE FINISH

Straight Locator Nose

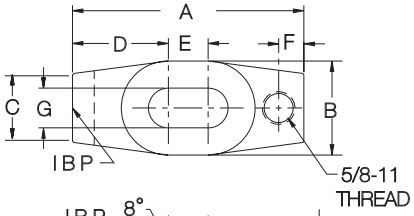

Straight Plain Nose

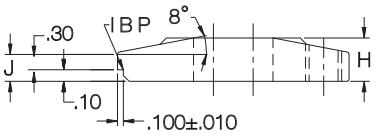

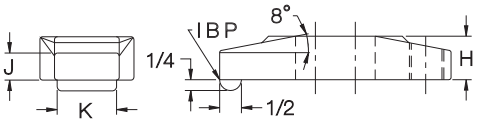

Gooseneck Locator Nose

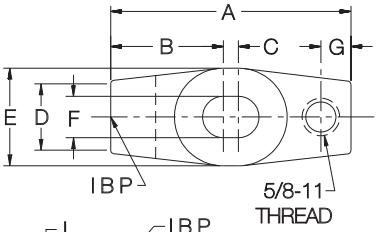

Gooseneck Plain Nose

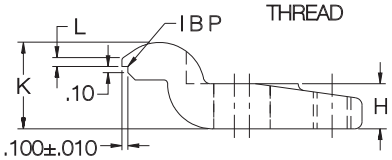

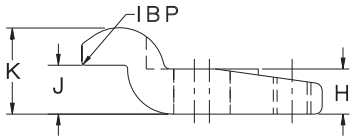

High-strength tapped-heel clamp strap available in straight or gooseneck design, with locator nose or plain nose. Locator-nose version is ideal for work-pieces with machined sides. The accurately machined notch ensures precise, repeatable clamp location for increased machining clearance. For rear clamp rests, see Stud Leveling Feet on pages 140 and 141.

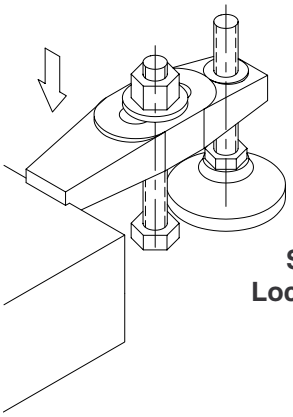

Straight Locator Nose Clamp

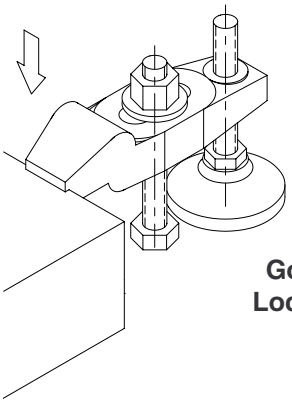

Gooseneck Locator Nose Clamp

STRAIGHT — LOCATOR NOSE

PART NO.	STUD SIZE	A	B	C	D	E	F	G	H	J	K
CL-4-FSCS	5/8-11	4	1-5/8	1-3/16	1-21/32	11/16	7/16	11/16	3/4	1/2	—
CL-6-FSCS		6	1-3/4	1-1/4	2-5/16	1-3/8	9/16		7/8	9/16	—
CL-8-FSCS	3/4-10	8	2-1/8	1-1/2	3	2	11/16	13/16	1-1/8	3/4	—
CL-10-FSCS	7/8-9	10	2-1/2	1-3/4	3-5/8	2-3/4	13/16	15/16	1-3/8	15/16	—

STRAIGHT — PLAIN NOSE

CL-4-FRCS	5/8-11	4	1-5/8	1-3/16	1-21/32	11/16	7/16	11/16	3/4	1/2	1
CL-6-FRCS		6	1-3/4	1-1/4	2-5/16	1-3/8	9/16		7/8	9/16	
CL-8-FRCS	3/4-10	8	2-1/8	1-1/2	3	2	11/16	13/16	1-1/8	3/4	1-1/4
CL-10-FRCS	7/8-9	10	2-1/2	1-3/4	3-5/8	2-3/4	13/16	15/16	1-3/8	15/16	1-1/2

GOOSENECK — LOCATOR NOSE

PART NO.	STUD SIZE	A	B	C	D	E	F	G	H	J	K	L
CL-40-FGNS	5/8-11	4	1-31/32	3/16	1-3/16	1-3/4	11/16	1/2	3/4	3/4	1-7/16	.15
CL-60-FGNS		6	2-17/32	1	1-1/4	1-3/4		5/8	7/8	15/16	1-9/16	.25
CL-80-FGNS	3/4-10	8	3-9/32	1-5/8	1-9/16	2-1/4	13/16	1	1-1/8	1-1/8	2	.35

GOOSENECK — PLAIN NOSE

CL-4-FGNS	5/8-11	4	1-31/32	3/16	1-3/16	1-3/4	11/16	1/2	3/4	3/4	1-7/16	—
CL-6-FGNS		6	2-17/32	1	1-1/4	1-3/4		5/8	7/8	15/16	1-9/16	—
CL-8-FGNS	3/4-10	8	3-9/32	1-5/8	1-9/16	2-1/8	13/16	1	1-1/8	1-1/8	2	—

CarrLane®
MANUFACTURING CO.
4200 Carr Lane Ct., P.O. Box 191970
St. Louis, Missouri 63119-7970 USA
Phone: 314-647-6200, FAX: 314-647-5736
Web Site: www.carrlane.com

(Rev. 12-07)

ALUMINUM CLAMP STRAPS

TENZALOY ALUMINUM ALLOY, 25,000 PSI YIELD STRENGTH, BRINELL HARDNESS-74

Straight Locator Nose

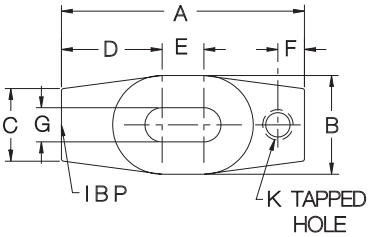

Straight Plain Nose

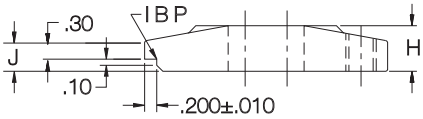

Gooseneck Locator Nose

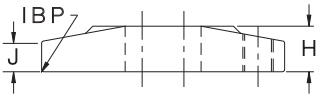

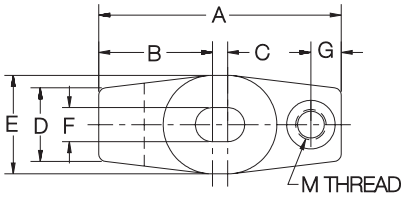

Gooseneck Plain Nose

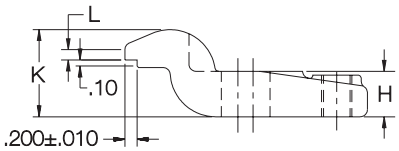

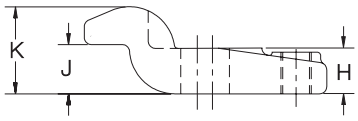

Soft clamp strap made of high-strength aluminum alloy. This tapped-heel clamp is available in straight or gooseneck design, with locator nose or plain nose. Locator-nose version is ideal for workpieces with machined sides. The accurately machined notch ensures precise, repeatable clamp location for increased machining clearance. For rear clamp rests, see Stud Leveling Feet on pages 140 and 141.

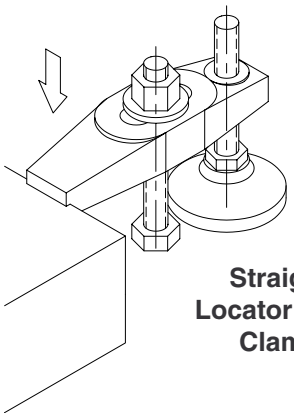

Straight Locator Nose Clamp

STRAIGHT — LOCATOR NOSE

PART NO.	STUD SIZE	A	B	C	D	E	F	G	H	J	K
CL-4-ALCS	1/2-13	4	1-5/8	1-3/16	1-21/32	11/16	7/16	9/16	3/4	1/2	1/2-13
CL-6-ALCS		6	1-3/4	1-1/4	2-5/16	1-3/8	9/16		7/8	9/16	1/2-13
CL-8-ALCS	5/8-11	8	2-1/8	1-1/2	3	2	11/16	11/16	1-1/8	3/4	5/8-11

STRAIGHT — PLAIN NOSE

CL-4-ASCS	1/2-13	4	1-5/8	1-3/16	1-21/32	11/16	7/16	9/16	3/4	1/2	1/2-13
CL-6-ASCS		6	1-3/4	1-1/4	2-5/16	1-3/8	9/16		7/8	9/16	1/2-13
CL-8-ASCS	5/8-11	8	2-1/8	1-1/2	3	2	11/16	11/16	1-1/8	3/4	5/8-11

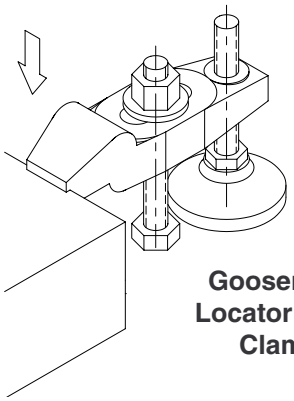

Gooseneck Locator Nose Clamp

GOOSENECK — LOCATOR NOSE

PART NO.	STUD SIZE	A	B	C	D	E	F	G	H	J	K	L	M
CL-40-AGNS	1/2-13	4	1-7/8	1/4	1-3/16	1-5/8	9/16	1/2	3/4	13/16	1-7/16	.25	1/2-13
CL-60-AGNS		6	2-1/2	1	1-1/4	1-3/4		5/8	7/8	15/16	1-9/16	.30	1/2-13
CL-80-AGNS	5/8-11	8	3-3/16	1-5/8	1-1/2	2-1/8	11/16	1	1-1/8	1-1/8	2-1/16	.40	5/8-11

GOOSENECK — PLAIN NOSE

CL-4-AGNS	1/2-13	4	1-7/8	1/4	1-3/16	1-5/8	9/16	1/2	3/4	13/16	1-7/16	—	1/2-13
CL-6-AGNS		6	2-1/2	1	1-1/4	1-3/4		5/8	7/8	15/16	1-9/16	—	1/2-13
CL-8-AGNS	5/8-11	8	3-3/16	1-5/8	1-1/2	2-1/8	11/16	1	1-1/8	1-1/8	2-1/16	—	5/8-11

Carr Lane MANUFACTURING CO.
4200 Carr Lane Ct., P.O. Box 191970
St. Louis, Missouri 63119-7970 USA
Phone: 314-647-6200, FAX: 314-647-5736
Web Site: www.carrlane.com

(Rev. 12-07)

TAPPED-HEEL PADDED CLAMP STRAPS

STRAP: 1018 STEEL, CARBURIZED-HARDENED, BLACK OXIDE FINISH
PAD: 1018 STEEL, CARBURIZED-HARDENED, BLACK OXIDE FINISH

Steel

Tapped-Heel Clamp Strap that features a replaceable clamping pad attached with two screws (furnished). Clamp Strap also easily accepts custom pads or other attachments. Available for 1/4-20 to 1/2-13 stud sizes, most in a choice of several strap lengths.

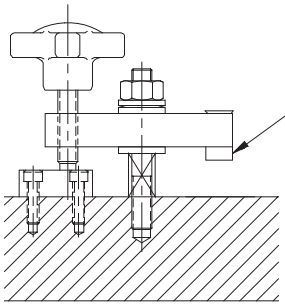

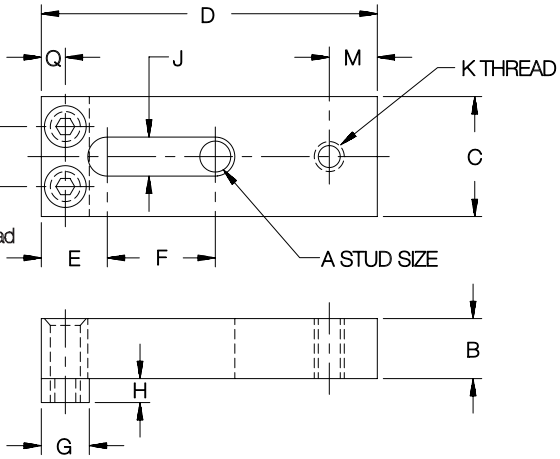

STRAPS — STEEL WITH STEEL PAD

PART NO.	A	B	C	D	E	F	G	H	J	K	M	P	Q
CL-157-CS	1/4-20	3/8	5/8	2	3/8	5/8	1/4	1/8	9/32	1/4-20	7/32	11/32	9/64
CL-158A-CS	5/16-18	1/2	7/8	2-1/2	9/16	3/4	3/8	3/16	11/32	5/16-18	1/4	1/2	3/16
CL-159A-CS				3-1/2		1-1/4							
CL-160A-CS	3/8-16	5/8	1-1/4	3-1/2	11/16	1-1/8	1/2	1/4	27/64	3/8-16	3/8	5/8	1/4
CL-162A-CS				4-1/2		1-5/8							
CL-163A-CS	1/2-13	3/4	1-1/2	4-1/2	7/8	1-1/4	5/8	3/8	17/32	1/2-13	7/16	3/4	5/16
CL-164A-CS				6		2							

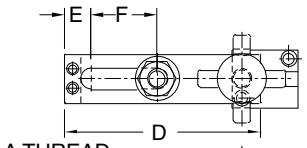

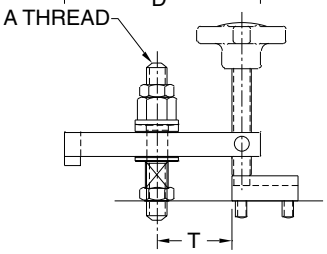

Hand-Knob Clamping Screw
CL-xx-THPA-HK

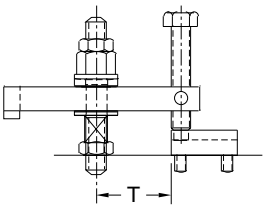

Hex-Head Clamping Screw
CL-xx-THPA-HH

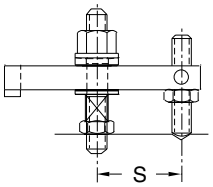

Oval-Point Clamp Rest
CL-xx-THPA-OP

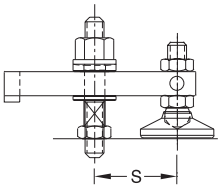

Leveling Foot
CL-xx-THPA-LF

ASSEMBLIES — STEEL WITH STEEL PAD (USA)

PART NO.	A	D	E	F	S	T	CLAMP STRAP	GUIDE BLOCK	SPRING	CLAMPING STUD	NUTS	FLAT WASHER
CL-157-THPA-xx	1/4-20	2	3/8	5/8	25/32	21/32	CL-157-CS	CL-2-GB	CL-5-SPG	CL-1/4-20x2.00-STUD	CL-4-JN CL-1-SNW	CL-7-FW
CL-160A-THPA-xx	3/8-16	3-1/2	11/16	1-1/8	1-5/16	1-1/8	CL-160A-CS	CL-4-GB	CL-7-SPG	CL-3/8-16x3.00-STUD	CL-6-JN CL-2-SNW	CL-1-FW
CL-162A-THPA-xx		4-1/2		1-5/8	1-13/16	1-5/8	CL-162A-CS					
CL-163A-THPA-xx	1/2-13	4-1/2	7/8	1-1/4	1-15/16	1-11/16	CL-163A-CS	CL-8-GB	CL-9-SPG	CL-1/2-13x4.00-STUD	CL-8-JN CL-3-SNW	CL-2-FW
CL-164A-THPA-xx		6		2	2-11/16	2-7/16	CL-164A-CS					

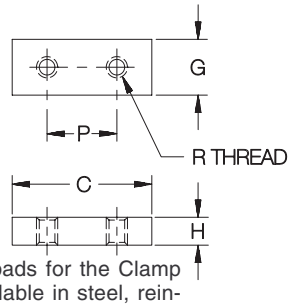

Replacement or optional pads for the Clamp Straps shown above. Available in steel, reinforced plastic, or brass.

REPLACEMENT PADS

PART NO. STEEL PAD	PART NO. PLASTIC PAD	PART NO. BRASS PAD	STUD SIZE	C	G	H	P	R
CL-40-CP	CL-20-CP	CL-30-CP	1/4-20	5/8	1/4	1/8	11/32	#5-40
CL-41-CP	CL-21-CP	CL-31-CP	5/16-18	7/8	3/8	3/16	1/2	#8-32
CL-42-CP	CL-22-CP	CL-32-CP	3/8-16	1-1/4	1/2	1/4	5/8	#10-24
CL-43-CP	CL-23-CP	CL-33-CP	1/2-13	1-1/2	5/8	3/8	3/4	1/4-20

Carr Lane®
MANUFACTURING CO.
4200 Carr Lane Ct., P.O. Box 191970
St. Louis, Missouri 63119-7970 USA
Phone: 314-647-6200, FAX: 314-647-5736
Web Site: www.carrlane.com

(Rev. 12-07)

SWIVEL-HEEL CLAMP STRAPS

STRAP: 1018 STEEL, CARBURIZED-HARDENED, BLACK OXIDE FINISH
SEE PAGES 55, 59, 214-219, 221, 228-230, AND 231-232 FOR OTHER MATERIAL SPECIFICATIONS

Clamp strap that swings out of the way for clear loading. Available for 1/4-20 (M6) to 3/4-10 (M20) stud sizes, each in several strap lengths. See below for complete clamp-strap assemblies using the straps shown above. Select any of the six nut/knob combinations shown by adding the appropriate suffix to the part number. Other Stud and Clamp Rest lengths are available (order pieces individually).

STRAPS — STEEL

PART NO.	A	B	C	D	E	F	G	H	J	K
CL-125-CS	1/4-20 or M6	3/8	5/8	2	27/32	9/32	1/4	11/32	1/8	3/16
CL-127-CS	3/8-16 or M10	1/2	1-1/8	3	1-7/32	27/64	13/32	1/2	9/32	3/8
CL-129-CS				4	1-23/32					
CL-131-CS				5	2-7/32					
CL-134-CS	1/2-13 or M12	5/8	1-1/4	3-1/2	1-15/32	17/32	13/32	1/2	9/32	3/8
CL-135-CS				4	1-23/32					
CL-137-CS				5	2-7/32					
CL-139-CS				6	2-23/32					
CL-140-CS	5/8-11 or M16	7/8	1-1/2	4	1-5/8	21/32	1/2	19/32	9/32	1/2
CL-142-CS				5	2-1/8					
CL-144-CS				6	2-5/8					
CL-152-CS	3/4-10 or M20	1	1-3/4	6	2-5/8	13/16	1/2	19/32	5/16	1/2
CL-154-CS				7	3-1/8					
CL-156-CS				8	3-5/8					

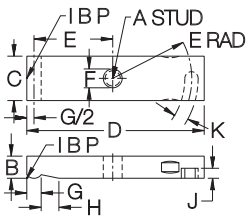

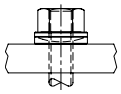

Spherical Nut & Washer CL-xx-SWHA-1

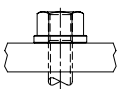

Flange Nut CL-xx-SWHA-2

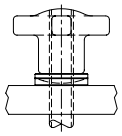

Hand Knob with Spherical Washer CL-xx-SWHA-4

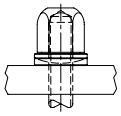

Acorn Nut with Spherical Washer CL-xx-SWHA-5

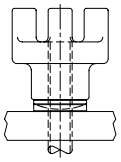

Bar Knob with Spherical Washer* CL-xx-SWHA-6

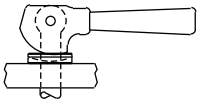

Cam Handle with Spherical Washer CL-xx-SWHA-7

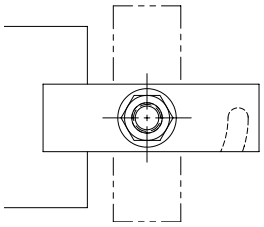

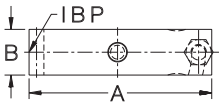

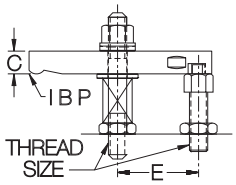

ASSEMBLIES — STEEL (USA)

PART NO.	THREAD SIZE	A	B	C	E	CLAMP STRAP	CLAMP REST	FLAT WASHER	STUD & SPRING
CL- 0-SWHA-x	1/4-20	2	5/8	3/8	27/32	CL-125-CS	CL-1-CR	CL-7-FW	CL-1/4-20x2.50-STUD CL- 5-SPG
CL- 2-SWHA-x	3/8-16	3	1-1/8	1/2	1-7/32	CL-127-CS	CL-2-CR	CL-1-FW	CL-3/8-16x3.00-STUD CL- 7-SPG
CL- 4-SWHA-x		4			1-23/32	CL-129-CS			
CL- 6-SWHA-x		5			2-7/32	CL-131-CS			
CL- 9-SWHA-x	1/2-13	3-1/2	1-1/4	5/8	1-15/32	CL-134-CS	CL-4-CR	CL-2-FW	CL-1/2-13x4.00-STUD CL- 9-SPG
CL-10-SWHA-x		4			1-23/32	CL-135-CS			
CL-12-SWHA-x		5			2-7/32	CL-137-CS			
CL-14-SWHA-x		6			2-23/32	CL-139-CS			
CL-19-SWHA-x	5/8-11	4	1-1/2	7/8	1-5/8	CL-140-CS	CL-6-CR	CL-3-FW	CL-5/8-11x4.50-STUD CL-11-SPG
CL-17-SWHA-x		5			2-1/8	CL-142-CS			
CL-15-SWHA-x		6			2-5/8	CL-144-CS			
CL-27-SWHA-x	3/4-10	6	1-3/4	1	2-5/8	CL-152-CS	CL-8-CR	CL-4-FW	CL-3/4-10x5.00-STUD CL-13-SPG
CL-29-SWHA-x		7			3-1/8	CL-154-CS			
CL-31-SWHA-x		8			3-5/8	CL-156-CS			

ASSEMBLIES — STEEL (METRIC)

CLM- 0-SWHA-x	M6	2	5/8	3/8	27/32	CL-125-CS	CLM-1-CR	CL-7-FW	CLM-6x65-STUD CL- 5-SPG
CLM- 2-SWHA-x	M10	3	1-1/8	1/2	1-7/32	CL-127-CS	CLM-2-CR	CL-1-FW	CLM-10x80-STUD CL- 7-SPG
CLM- 4-SWHA-x		4			1-23/32	CL-129-CS			
CLM- 6-SWHA-x		5			2-7/32	CL-131-CS			
CLM- 9-SWHA-x	M12	3-1/2	1-1/4	5/8	1-15/32	CL-134-CS	CLM-4-CR	CL-2-FW	CLM-12x95-STUD CL- 9-SPG
CLM-10-SWHA-x		4			1-23/32	CL-135-CS			
CLM-12-SWHA-x		5			2-7/32	CL-137-CS			
CLM-14-SWHA-x		6			2-23/32	CL-139-CS			
CLM-19-SWHA-x	M16	4	1-1/2	7/8	1-5/8	CL-140-CS	CLM-5-CR	CL-3-FW	CLM-16x110-STUD CL-11-SPG
CLM-17-SWHA-x		5			2-1/8	CL-142-CS			
CLM-15-SWHA-x		6			2-5/8	CL-144-CS			
CLM-27-SWHA-x	M20	6	1-3/4	1	2-5/8	CL-152-CS	CLM-8-CR	CLM-10-FW	CLM-20x125-STUD CL-13-SPG
CLM-29-SWHA-x		7			3-1/8	CL-154-CS			
CLM-31-SWHA-x		8			3-5/8	CL-156-CS			

* Available in thread sizes 3/8-16 and above (M10 and above in metric).

Carr Lane MANUFACTURING CO.
4200 Carr Lane Ct., P.O. Box 191970
St. Louis, Missouri 63119-7970 USA
Phone: 314-647-6200, FAX: 314-647-5736
Web Site: www.carrlane.com

(Rev. 12-07)

DOUBLE-END CLAMP STRAPS

STRAP: 1018 STEEL, CARBURIZED-HARDENED, BLACK OXIDE FINISH
SEE PAGES 59, 69, 214-219, 221 AND 232 FOR OTHER MATERIAL SPECIFICATIONS

Steel

Clamp strap with two clamping ends, for holding two workpieces simultaneously. Available for 1/4-20 (M6) to 3/4-10 (M20) stud sizes, each in several strap lengths.

STRAPS — STEEL

PART NO.	A	B	C	D	E	F	G	H	J
CL-23A-CS	1/4-20 or M6	3/8	5/8	2	11/16	9/32	1/4	11/32	5/8
CL-23B-CS				2-1/2	7/8				3/4
CL-23C-CS	5/16-18 or M8	1/2	3/4	2	1	3/8	5/16	7/16	0
CL-23D-CS				3	1-1/2				
CL-23-CS	3/8-16 or M10	1/2	1-1/8	3	1	27/64	13/32	1/2	1
CL-24-CS				4	1-1/2				
CL-25-CS				5	2				
CL-27-CS	1/2-13 or M12	5/8	1-1/4	4	1-1/2	17/32	13/32	1/2	1
CL-28-CS				5	2				
CL-30-CS				6	2-1/2				
CL-32A-CS	5/8-11 or M16	7/8	1-1/2	5	1-7/8	21/32	1/2	19/32	1-1/4
CL-33-CS				6	2-3/8				
CL-37-CS	3/4-10 or M20	1	1-3/4	6	2-1/8	13/16	1/2	19/32	1-3/4
CL-38-CS				7	2-5/8				
CL-39-CS				8	3-1/8				

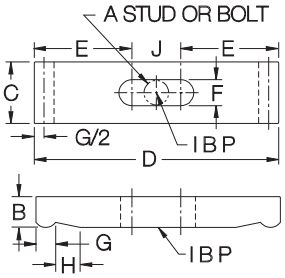

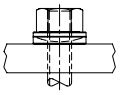

Spherical Nut & Washer CL-xx-DEA-1

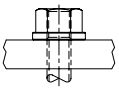

Flange Nut CL-xx-DEA-2

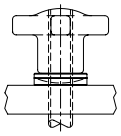

Hand Knob with Spherical Washer CL-xx-DEA-4

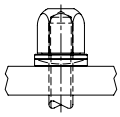

Acorn Nut with Spherical Washer CL-xx-DEA-5

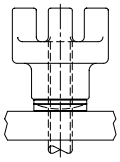

Bar Knob with Spherical Washer* CL-xx-DEA-6

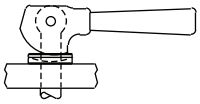

Cam Handle with Spherical Washer CL-xx-DEA-7

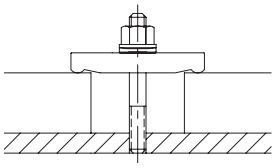

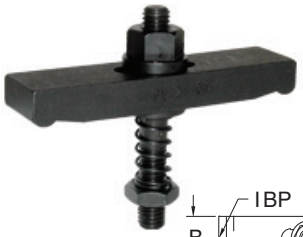

Steel

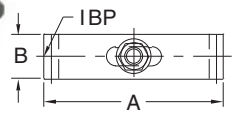

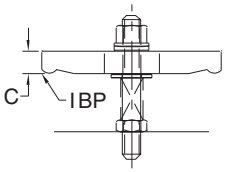

ASSEMBLIES — STEEL (USA)

PART NO.	THREAD SIZE	A	B	C	CLAMP STRAP	FLAT WASHER	STUD & SPRING
CL-0-DEA-x	1/4-20	2	5/8	3/8	CL-23A-CS	CL-7-FW	CL-1/4-20x2.50-STUD CL-5-SPG
CL-1-DEA-x		2-1/2			CL-23B-CS		
CL-1A-DEA-x	5/16-18	2	3/4	1/2	CL-23C-CS	CL-14-FW	CL-5/16-18x3.00-STUD CL-6-SPG
CL-1B-DEA-x		3			CL-23D-CS		
CL-2-DEA-x	3/8-16	3	1-1/8	1/2	CL-23-CS	CL-1-FW	CL-3/8-16x3.00-STUD CL-7-SPG
CL-4-DEA-x		4			CL-24-CS		
CL-6-DEA-x		5			CL-25-CS		
CL-8-DEA-x	1/2-13	4	1-1/4	5/8	CL-27-CS	CL-2-FW	CL-1/2-13x4.00-STUD CL-9-SPG
CL-10-DEA-x		5			CL-28-CS		
CL-12-DEA-x		6			CL-30-CS		
CL-15-DEA-x	5/8-11	5	1-1/2	7/8	CL-32A-CS	CL-3-FW	CL-5/8-11x4.50-STUD CL-11-SPG
CL-13-DEA-x		6			CL-33-CS		
CL-20-DEA-x	3/4-10	6	1-3/4	1	CL-37-CS	CL-4-FW	CL-3/4-10x5.00-STUD CL-13-SPG
CL-22-DEA-x		7			CL-38-CS		
CL-23-DEA-x		8			CL-39-CS		

A complete clamp-strap assembly using one of the straps shown above. Select any of the six nut/knob combinations shown above by adding the appropriate suffix to the part number. Other stud lengths are available (order pieces individually).

ASSEMBLIES — STEEL (METRIC)

CLM-0-DEA-x	M6	2	5/8	3/8	CL-23A-CS	CL-7-FW	CLM-6x65-STUD CL-5-SPG
CLM-1-DEA-x		2-1/2			CL-23B-CS		
CLM-1A-DEA-x	M8	2	3/4	1/2	CL-23C-CS	CL-14-FW	CLM-8x80-STUD CL-6-SPG
CLM-1B-DEA-x		3			CL-23D-CS		
CLM-2-DEA-x	M10	3	1-1/8	1/2	CL-23-CS	CL-1-FW	CLM-10x80-STUD CL-7-SPG
CLM-4-DEA-x		4			CL-24-CS		
CLM-6-DEA-x		5			CL-25-CS		
CLM-8-DEA-x	M12	4	1-1/4	5/8	CL-27-CS	CL-2-FW	CLM-12x95-STUD CL-9-SPG
CLM-10-DEA-x		5			CL-28-CS		
CLM-12-DEA-x		6			CL-30-CS		
CLM-15-DEA-x	M16	5	1-1/2	7/8	CL-32A-CS	CL-3-FW	CLM-16x110-STUD CL-11-SPG
CLM-13-DEA-x		6			CL-33-CS		
CLM-20-DEA-x	M20	6	1-3/4	1	CL-37-CS	CLM-10-FW	CLM-20x125-STUD CL-13-SPG
CLM-22-DEA-x		7			CL-38-CS		
CLM-23-DEA-x		8			CL-39-CS		

* Available in thread sizes 3/8-16 and above (M10 and above in metric).

Carr Lane®
MANUFACTURING CO.
4200 Carr Lane Ct., P.O. Box 191970
St. Louis, Missouri 63119-7970 USA
Phone: 314-647-6200, FAX: 314-647-5736
Web Site: www.carrlane.com

(Rev. 11-09)

DOUBLE-END GOOSENECK CLAMP STRAPS

NEW!

STRAP: ALLOY STEEL, BLACK OXIDE FINISH

SEE PAGES 56, 69, 214-216, 218-219, 225, 230, and 249 FOR OTHER MATERIAL SPECIFICATIONS

Steel

Gooseneck version of our Double-End Clamp Straps. This design recesses the clamping nut to provide a low overall profile. Double-End Clamps have two clamping ends, for holding two workpieces simultaneously. Turn strap 90˚ for clear loading. Available to fit 1/2-13 and 5/8-11 studs (M12 and M16 in metric).

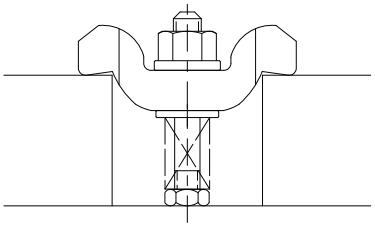

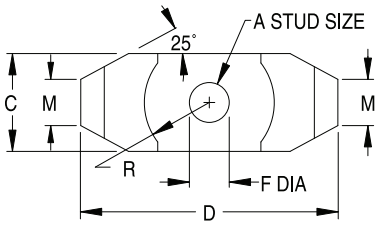

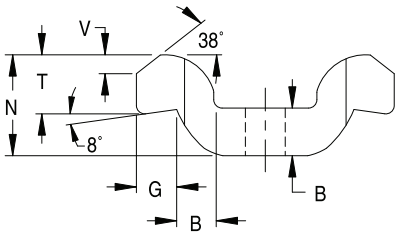

STRAPS – STEEL

PART NO.	A	B	C	D	F	G	M	N	R	T	V
CL-842-GCS	1/2-13, 5/8-11, M12, or M16	.79	1.58	3.94	.67	.63	.79	1.58	.94	.90	.34

Double-End Gooseneck Clamp Straps are also available as a complete assembly. Select any of the four nut/knob combinations shown below by adding the appropriate suffix to the part number. Other lengths of Clamping Studs and Clamp Rests are available (order pieces individually).

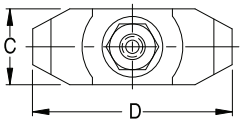

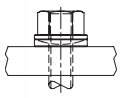

Spherical Nut & Washer CL-xx-GCSA-1

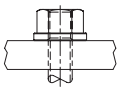

Flange Nut CL-xx-GCSA-2

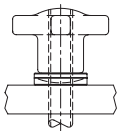

Hand Knob with Spherical Washer CL-xx-GCSA-4

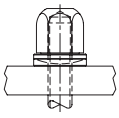

Acorn Nut with Spherical Washer CL-xx-GCSA-5

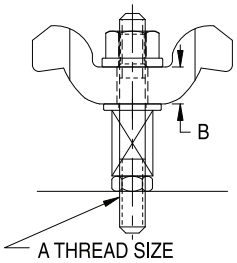

PART NO.	A	B	C	D	CLAMP STRAP	FLAT WASHER	CLAMP SPRING	CLAMPING STUD	JAM NUT
CL-842-GCSA-x	1/2-13	.79	1.58	3.94	CL-842-GCS	CL-2-FW	CL-9-SPG	CL-1/2-13X4.00-STUD	CL-8-JN
CL-1042-GCSA-x	5/8-11					CL-3-FW	CL-11-SPG	CL-5/8-11X4.50-STUD	CL-10-JN

ASSEMBLIES – STEEL (METRIC)

PART NO.	A	B	C	D	CLAMP STRAP	FLAT WASHER	CLAMP SPRING	CLAMPING STUD	JAM NUT
CL-842-GCSA-x	M12	.79	1.58	3.94	CL-842-GCS	CL-2-FW	CL-9-SPG	CLM-12X95-STUD	CL-8-JN
CL-1042-GCSA-x	M16					CL-3-FW	CL-11-SPG	CLM-16X10-STUD	CL-10-JN

Carr Lane®
MANUFACTURING CO.
4200 Carr Lane Ct., P.O. Box 191970
St. Louis, Missouri 63119-7970 USA
Phone: 314-647-6200, FAX: 314-647-5736
Web Site: www.carrlane.com

(Rev. 12-07)

STEP BLOCKS & CLAMPS

11L17 STEEL, CARBURIZED-HARDENED, BLACK OXIDE FINISH

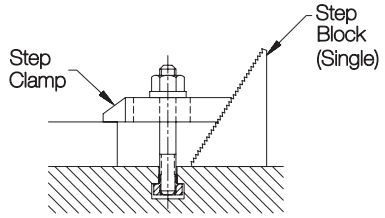

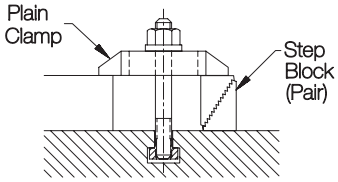

Step Blocks (pair)

Serrated block that can be used individually or in pairs, as a clamp rest. (One part number consists of a pair of blocks). Use a single block with Step Clamps, or a pair of blocks with Plain Clamps. All blocks and clamps are made from top-grade steel.

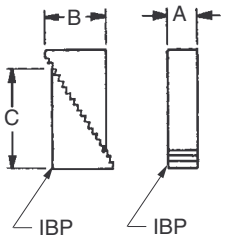

STEP BLOCKS (PAIR)

PART NO.	A	B	C	HEIGHT RANGE
CL-10-BS	1	.681	1.104	3/4 to 1-1/2
CL-20-BS		1.068	1.747	1-1/8 to 2-1/2
CL-30-BS		2.355	3.980	2-1/2 to 6
CL-40-BS	1-1/2	1.454	2.390	1-3/4 to 3-3/4
CL-50-BS		2.355	3.890	2-1/2 to 6
CL-60-BS		3.385	5.604	3-1/2 to 9
CL-70-BS	2	1.454	2.390	1-3/4 to 3-3/4
CL-80-BS		2.355	3.890	2-1/2 to 6
CL-90-BS		3.385	5.604	3-1/2 to 9

Step Clamp

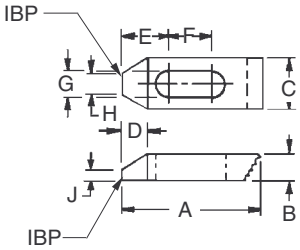

STEP CLAMPS

PART NO.	STUD SIZE	A	B	C	D	E	F	G	H	J
CL-32-STC	3/8 or M10	2-1/2	1/2	1	7/16	7/8	13/16	7/16	7/16	1/4
CL-34-STC		4	5/8		11/16	1-3/16	1-5/16		1/4	
CL-36-STC		6	3/4	1-1/8	3/4	1-1/8	2-3/16		3/8	5/16
CL-42-STC	1/2 or M12	2-1/2	1/2	1-1/8	7/16	29/32	11/16	9/16	9/16	3/16
CL-44-STC		4	3/4	1-1/4	11/16	1-7/32	1-3/16		1/2	1/4
CL-46-STC		6	7/8		3/4	1-5/32	2-1/8		7/16	5/16
CL-52-STC	5/8 or M16	2-1/2	5/8	1-1/4	3/8	15/16	9/16	11/16	3/4	3/8
CL-54-STC		4	3/4	1-1/2	11/16	1-1/4	1-1/16		11/16	
CL-56-STC		6	7/8		3/4	1-9/32	1-15/16		9/16	7/16
CL-64-STC	3/4 or M20	4	3/4	1-1/2	3/4	1-5/16	15/16	13/16	5/8	5/16
CL-66-STC		6	1		13/16	1-1/4	1-7/8			1/2
CL-68-STC		8		1-3/4	3/4	1-7/8	2-3/16		3/4	5/8

Plain Clamp

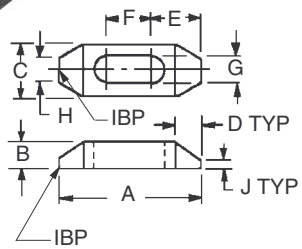

PLAIN CLAMPS

PART NO.	STUD SIZE	A	B	C	D	E	F	G	H	J
CL-32-PC	3/8 or M10	2-1/2	1/2	1	7/16	27/32	13/16	7/16	7/16	1/4
CL-34-PC		4	5/8		11/16	1-1/32	1-7/16		1/4	
CL-36-PC		6	3/4	1-1/8	3/4	1-5/32	2-3/16		3/8	5/16
CL-42-PC	1/2 or M12	2-1/2	1/2	1-1/8	7/16	29/32	11/16	9/16	9/16	3/16
CL-44-PC		4	3/4	1-1/4	11/16	1-5/32	1-5/16		1/2	1/4
CL-46-PC		6	7/8		3/4	1-9/32	2-1/16		7/16	5/16
CL-52-PC	5/8 or M16	2-1/2	5/8	1-1/4	3/8	31/32	9/16	11/16	3/4	3/8
CL-54-PC		4	3/4		11/16	1-9/32	1-3/16		11/16	
CL-56-PC		6	7/8	1-1/2	3/4	1-13/32	1-15/16		9/16	7/16
CL-64-PC	3/4 or M20	4	3/4	1-1/2	3/4	1-11/32	1-1/16	13/16	5/8	5/16
CL-66-PC		6	1		13/16	1-15/32	1-15/16			1/2
CL-68-PC		8	1-1/8	1-3/4	3/4	1-29/32	2-3/16		3/4	5/8

Carr Lane MANUFACTURING CO.
4200 Carr Lane Ct., P.O. Box 191970
St. Louis, Missouri 63119-7970 USA
Phone: 314-647-6200, FAX: 314-647-5736
Web Site: www.carrlane.com

STEP BLOCKS & CLAMPS

11L17 STEEL, CARBURIZED-HARDENED, BLACK OXIDE FINISH

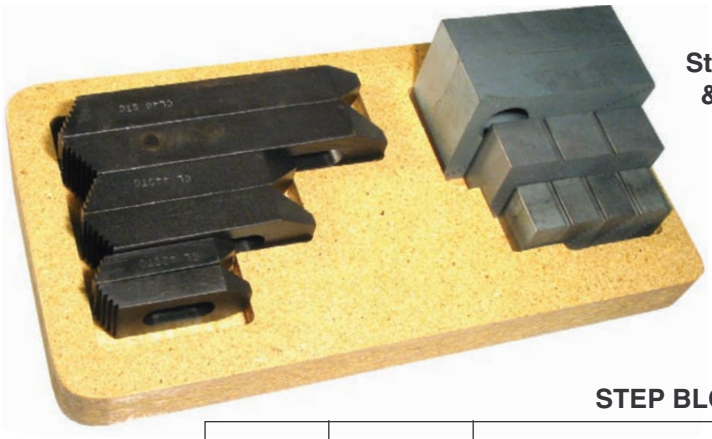

Step Block & Clamp Set

An assortment of Step Clamps and Step Blocks in a handy wooden holder. Available for stud sizes from 3/8-16 to 3/4-10 (M10 to M20 metric studs).

STEP BLOCK & CLAMP SETS

PART NO.	STUD SIZE	STEP CLAMPS (2) EACH	STEP BLOCK PAIRS (2) EACH		HOLDER
CL-10-SBC	3/8-16 or M10	CL-32-STC, CL-34-STC, CL-36-STC	STANDARD	CL-10-BS, CL-20-BS, CL-30-BS	CL-1-BSH
CL-20-SBC	1/2-13 or M12	CL-42-STC, CL-44-STC, CL-46-STC	STANDARD	CL-10-BS, CL-20-BS, CL-30-BS	CL-1-BSH
CL-40-SBC			HIGH-RISE	CL-40-BS, CL-50-BS, CL-60-BS	CL-2-BSH
CL-30-SBC	5/8-11 or M16	CL-52-STC, CL-54-STC, CL-56-STC	STANDARD	CL-10-BS, CL-20-BS, CL-30-BS	CL-1-BSH
CL-50-SBC			HIGH-RISE	CL-40-BS, CL-50-BS, CL-60-BS	CL-2-BSH
CL-60-SBC	3/4-10 or M20	CL-64-STC, CL-66-STC, CL-68-STC	HIGH-RISE	CL-40-BS, CL-50-BS, CL-60-BS	CL-3-BSH

Step Block Set

A complete assortment of Step Blocks in a handy wooden box.

STEP BLOCK SETS

PART NO.	STEP BLOCK PAIRS	BOX
CL-30-SBS	(4)CL-10-BS, (4)CL-20-BS, (2)CL-30-BS	CL-3-SBB

NO-MAR HAMMERS

ALUMINIUM ALLOY WITH STEEL CORE

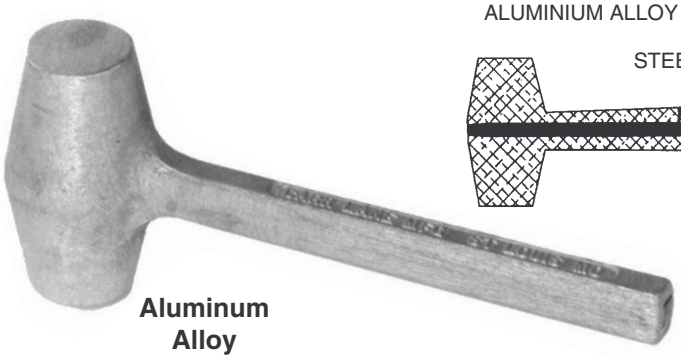

Aluminum Alloy

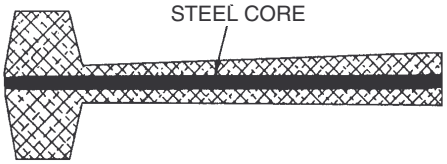

Economical aluminium alloy hammer. Excellent alternative to old-fashioned lead hammers, to eliminate the risk of lead contamination. One-piece cast construction with a steel core for extra strength. Applications include metalworking, tooling, automotive assembly and repair work, straightening work, car body work, and mold construction. Available in two sizes.

PART NO.	WEIGHT	FACE DIA	HANDLE LENGTH TO CENTERLINE OF FACE
CL-1-NMH	2 lb	1-1/2	10-1/2
CL-2-NMH	3.5 lb	2	11

Carr Lane®

MANUFACTURING CO.
4200 Carr Lane Ct., P.O. Box 191970
St. Louis, Missouri 63119-7970 USA
Phone: 314-647-6200, FAX: 314-647-5736
Web Site: www.carrlane.com

(Rev. 12-07)

TINY VISE™
EDGE CLAMPS

BODY: 1018 STEEL, CARBURIZED-HARDENED, BLACK OXIDE FINISH
THRUST WASHER: 1144 STEEL, BLACK OXIDE FINISH

Serrated Jaw and Smooth Jaw (Reversible)

An important new clamping development! These patented new mini edge clamps, ideal for fixturing small parts, offer major functional and durability improvements over earlier designs:

1. Clamping force is applied by positive screw action with the easy turn of a hex wrench (not with an unreliable eccentric cam, as used in other designs). A high-strength flat-head socket screw engages a mating offset countersink to exert strong clamping force.

2. Only TINY VISE mini edge clamps truly exert downthrust force *on the workpiece*, to prevent it from lifting. A thrust washer underneath the clamp engages a second mating countersink to provide downward action.

TINY VISE Edge Clamps are available in a wide range of sizes, from a miniature #8-32 thread size, up to a powerful 1"-8 thread size with 2,500 lbs clamping force. Spare thrust washers are available as accessories (e.g. CL-2-TV-WASH). Patent No. 5,624,106

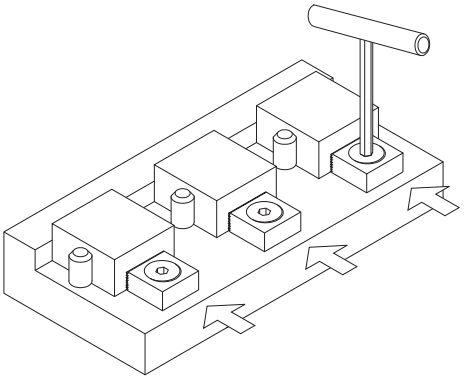

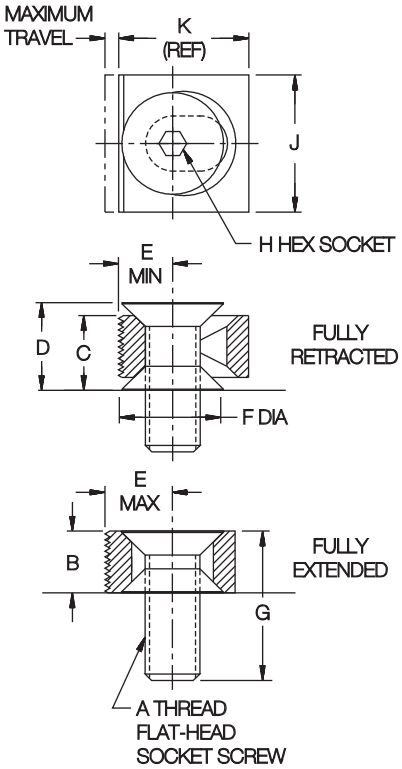

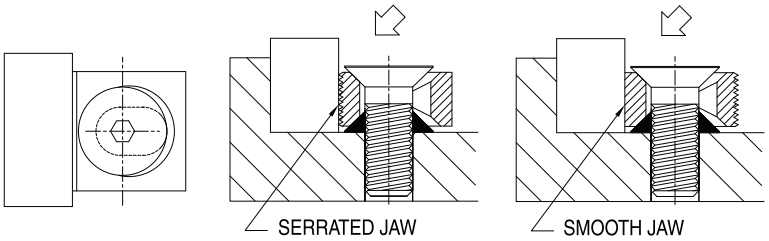

Unlike other mini edge clamps, TINY VISE Edge Clamps truly exert downward force *on the workpiece*, to prevent it from lifting. The serrated face provides maximum gripping, while the smooth face (turn 180°) avoids marring finished parts.

SERRATED JAW AND SMOOTH JAW (REVERSIBLE)

PART NO.	A	B	C	D	E MIN	E MID RANGE	E MAX	F DIA	G	H	J	K	MAXIMUM TRAVEL	RECOMMENDED TORQUE (FT-LBS)*	APPROX. HORIZONTAL CLAMPING FORCE AT RECOMMENDED TORQUE (LBS)*
CL-2-TV	#8-32	.250	.319	.382	.175	.205	.235	.335	5/8	3/32	9/16	.470	.060	.07	60
CL-3-TV	#10-32	.312	.390	.459	.208	.242	.274	.390	3/4	1/8	5/8	.550	.066	.10	75
CL-4-TV	1/4-20	.375	.467	.552	.280	.320	.360	.510	7/8	5/32	7/8	.720	.080	.25	130
CL-5-TV	5/16-18	.438	.550	.652	.338	.386	.434	.640	1	3/16	1	.870	.096	.55	240
CL-6-TV	3/8-16	.500	.627	.746	.390	.445	.500	.742	1-1/8	7/32	1-1/8	1.000	.110	1.0	370
CL-8-TV	1/2-13	.562	.702	.833	.474	.534	.594	.897	1-3/8	5/16	1-1/4	1.187	.120	3.0	800
CL-10-TV	5/8-11	.750	.901	1.039	.620	.685	.750	1.148	1-5/8	3/8	1-5/8	1.500	.130	5.5	1,200
CL-12-TV	3/4-10	.875	1.059	1.234	.740	.820	.900	1.394	2	1/2	2	1.800	.160	10	1,800
CL-16-TV	1"-8	1.125	1.355	1.573	.988	1.088	1.188	1.890	2-1/2	5/8	2-1/2	2.375	.200	18	2,500

*Recommended torque and clamping force are at 1/3 of yield strength, leaving 2/3 of holding capacity to resist external cutting forces, etc.

CarrLane®
MANUFACTURING CO.
4200 Carr Lane Ct., P.O. Box 191970
St. Louis, Missouri 63119-7970 USA
Phone: 314-647-6200, FAX: 314-647-5736
Web Site: www.carrlane.com

(Rev. 12-07)

TINY VISE™
EDGE CLAMPS

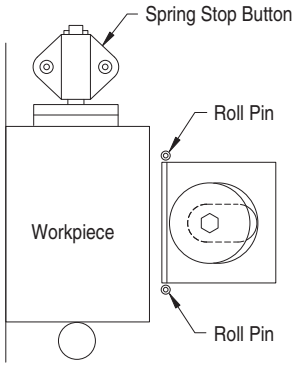

Roll pins can be installed to keep the Tiny Vise perfectly aligned for workpiece loading (especially helpful on horizontal machining centers).

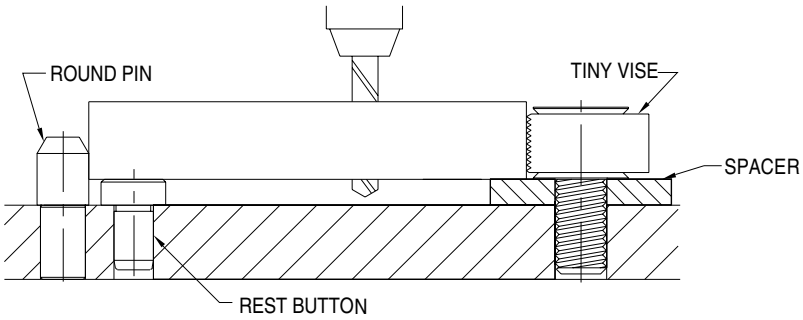

For a small amount of cutting-tool clearance, TINY VISE Edge Clamps can be mounted with a spacer underneath, using a longer screw. For greater clearance, clamps should be mounted into a tapped riser block fastened to the plate, to reduce bending stress on the screw.

NEW!

The new V-jaw version of our popular Tiny Vise is ideal for clamping round workpieces. The 90º V jaw can also be used to clamp a rectangular workpiece from two directions with a single clamp at its corner.

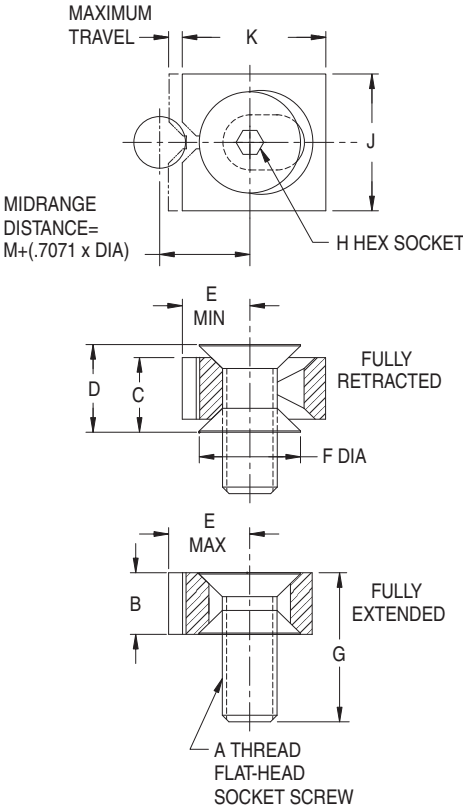

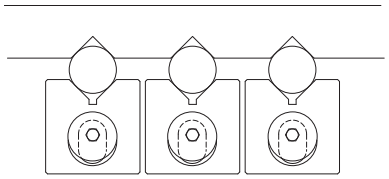

Multiple workpieces can be clamped extremely close together.

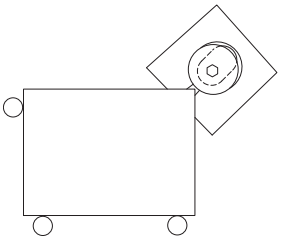

A rectangular workpiece can be clamped from two directions with a single clamp.

V JAW

PART NO.	A	B	C	D	E MIN	E MID RANGE	E MAX	F DIA	G	H	J	K	M	MAXIMUM WORKPIECE DIAMETER	MAXIMUM TRAVEL	RECOM-MENDED TORQUE (FT-LBS)*	APPROX. HORIZONTAL CLAMPING FORCE AT RECOMMENDED TORQUE (LBS)*
CL-2-TVR	#8-32	.250	.319	.382	.292	.322	.352	.335	5/8	3/32	.625	.620	.212	3/8	.060	.07	60
CL-3-TVR	#10-32	.312	.390	.459	.375	.407	.940	.390	3/4	1/8	.750	.750	.253	1/2	.066	.10	75
CL-4-TVR	1/4-20	.375	.467	.552	.453	.493	.533	.510	7/8	5/32	.875	.900	.315	19/32	.080	.25	130
CL-5-TVR	5/16-18	.438	.550	.652	.562	.611	.660	.640	1	3/16	1.000	1.100	.410	11/16	.096	.55	240
CL-6-TVR	3/8-16	.500	.627	.746	.687	.742	.797	.742	1-1/8	7/32	1.250	1.300	.454	15/16	.110	1.0	370
CL-8-TVR	1/2-13	.562	.702	.833	.812	.872	.932	.897	1-3/8	5/16	1.500	1.530	.557	1-1/32	.120	3.0	800
CL-10-TVR	5/8-11	.750	.901	1.039	1.124	1.157	1.254	1.148	1-5/8	3/8	2.000	2.100	.692	1-9/16	.130	5.5	1,200
CL-12-TVR	3/4-10	.875	1.059	1.234	1.344	1.424	1.504	1.394	2	1/2	2.500	2.500	.848	1-13/16	.160	10	1,800
CL-16-TVR	1"-8	1.125	1.355	1.573	1.687	1.782	1.887	1.890	2-1/2	5/8	3.000	3.200	1.137	2-1/16	.200	18	2,500

*Recommended torque and clamping force are at 1/3 of yield strength, leaving 2/3 of holding capacity to resist external cutting forces, etc.

Carr Lane®
MANUFACTURING CO.
4200 Carr Lane Ct., P.O. Box 191970
St. Louis, Missouri 63119-7970 USA
Phone: 314-647-6200, FAX: 314-647-5736
Web Site: www.carrlane.com

(Rev. 4-08)

TINY VISE™
DOUBLE EDGE CLAMPS

BODY: 1018 STEEL, CARBURIZED-HARDENED, BLACK OXIDE FINISH; SPRINGS: 302 STAINLESS STEEL
THRUST WASHERS: 1144 STEEL, BLACK OXIDE FINISH; GUIDE PINS: 17-4PH STAINLESS STEEL.

Two Serrated Jaws

Two Smooth Jaws

These Double Edge Clamps allow clamping two workpieces at the same time with the same great benefits of the standard TINY VISE (page 200). These double clamps offer the following major improvements over earlier designs:

1. Clamping force is applied to two workpieces simultaneously by positive screw action with the turn of a hex wrench. A high-strength cap screw and thrust washer engage a mating offset countersink to exert strong clamping force.

2. Only TINY VISE mini edge clamps truly exert downthrust force *on the workpiece*, to prevent it from lifting. A thrust washer underneath the clamp engages a second mating countersink to provide downward action.

3. Only TINY VISE Double Edge Clamps compensate for size variation when clamping two workpieces. Thrust washers have ID clearance to enable them to float horizontally, allowing both clamping jaws to contact the part simultaneously. This ensures that both parts are securely clamped with equal force.

TINY VISE Double Edge Clamps are available in several sizes, from 5/16-18 up to a powerful 1"-8 thread size with 12,000 lbs clamping force (M8 to M24 in metric). Note: these clamps should always be used to hold two workpieces, not just one; otherwise, recommended torque and clamping force will be significantly reduced. Spare thrust washers are available as accessories (e.g. CL-50-TV-WASH, two required per clamp). Patent No. 5,624,106.

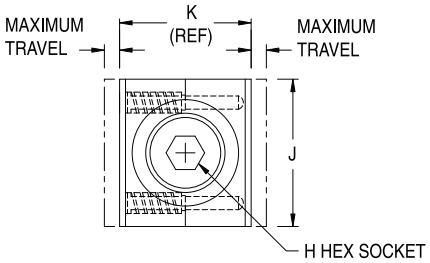

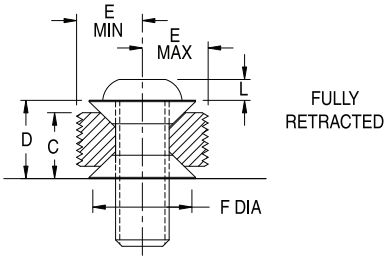

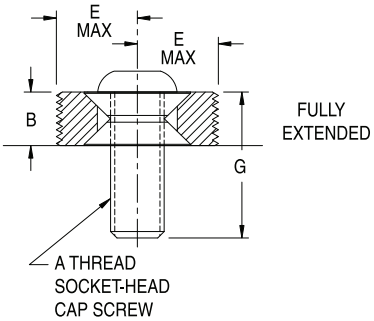

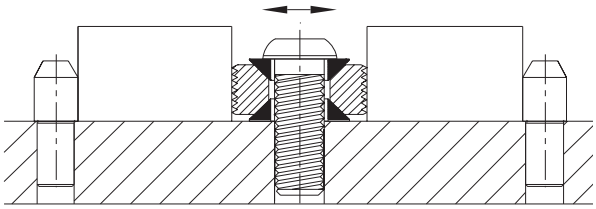

Thrust washers have ID clearance to enable them to float horizontally, allowing both clamping jaws to contact their workpiece simultaneously even if parts are slightly different in size. This ensures that both parts are securely clamped with equal force.

USA

PART NO. SERRATED JAWS	PART NO. SMOOTH JAWS	A	B	C	D	E MIN	E MID RANGE	E MAX	F DIA	G	H	J	K	L	ALLOWABLE WORKPIECE SIZE DIFFERENTIAL	MAXIMUM TRAVEL (WITH NO SIZE DIFFERENTIAL)	RECOM-MENDED TORQUE (FT-LBS)*	APPROX. HORIZONTAL CLAMPING FORCE AT RECOMMENDED TORQUE (LBS)*
CL-50-TV	CL-55-TV	5/16-18	.375	.486	.597	.422	.470	.518	.625	1	3/16	1	.844	.16	.048	.096	7	1,500
CL-60-TV	CL-65-TV	3/8-16	.438	.570	.684	.520	.572	.625	.750	1-1/8	7/32	1-1/4	1.250	.19	.052	.105	12	1,800
CL-80-TV	CL-85-TV	1/2-13	.500	.635	.770	.641	.698	.755	.875	1-1/4	5/16	1-3/8	1.282	.26	.060	.114	15	2,100
CL-100-TV	CL-105-TV	5/8-11	.625	.765	.905	.690	.750	.810	1.125	1-1/2	3/8	1-1/2	1.380	.32	.078	.120	36	4,000
CL-160-TV	CL-165-TV	1"-8	1.000	1.159	1.318	1.109	1.178	1.247	1.875	2-1/4	3/4	2-1/2	2.218	1.00	.094	.138	175	12,000

METRIC

CLM-50-TV	CLM-55-TV	M8	.375	.486	.597	.422	.470	.518	.625	1	5mm	1	.844	.16	.048	.096	7	1,500
CLM-60-TV	CLM-65-TV	M10	.438	.570	.684	.520	.572	.625	.750	1-1/8	6mm	1-1/4	1.250	.19	.052	.105	12	1,800
CLM-80-TV	CLM-85-TV	M12	.500	.635	.770	.641	.698	.755	.875	1-1/4	8mm	1-3/8	1.282	.26	.060	.114	15	2,100
CLM-100-TV	CLM-105-TV	M16	.625	.765	.905	.690	.750	.810	1.125	1-1/2	10mm	1-1/2	1.380	.32	.078	.120	36	4,000
CLM-160-TV	CLM-160-TV	M24	1.000	1.159	1.318	1.109	1.178	1.247	1.875	2-1/4	19mm	2-1/2	2.218	1.00	.094	.138	175	12,000

*Recommended torque and clamping force are at 1/3 of yield strength, leaving 2/3 of holding capacity to resist external cutting forces, etc.

Carr Lane®
MANUFACTURING CO.
4200 Carr Lane Ct., P.O. Box 191970
St. Louis, Missouri 63119-7970 USA
Phone: 314-647-6200, FAX: 314-647-5736
Web Site: www.carrlane.com

(Rev. 7-10)

TINY VISE™
DOUBLE EDGE CLAMPS

Two V Jaws

The new V-jaw version of our popular Tiny Vise is ideal for clamping round workpieces. The 90º V jaw can also be used to clamp a rectangular workpiece from two directions with a single clamp at its corner. Double edge clamps allow clamping two workpieces at the same time with equal force.

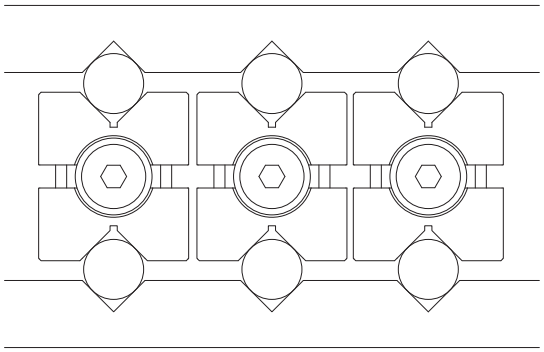

Multiple workpieces can be clamped extremely close together.

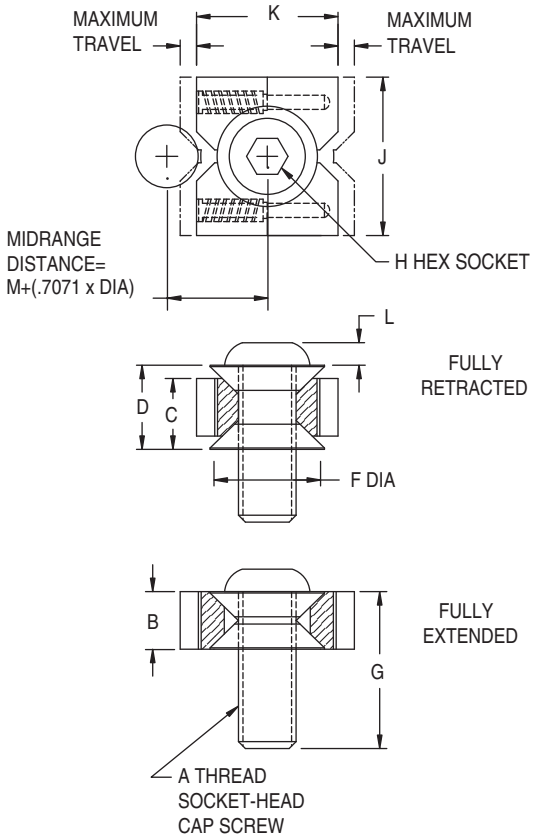

V JAWS (USA)

PART NO.	A	B	C	D	F DIA	G	H	J	K	L	M	MAXIMUM WORKPIECE DIAMETER	ALLOWABLE WORKPIECE SIZE DIFFER-ENTIAL	MAX. TRAVEL (WITH NO SIZE DIFFERENTIAL)	RECOM-MENDED TORQUE (FT-LBS)*	APPROX. HORIZONTAL CLAMPING FORCE AT RECOMMENDED TORQUE (LBS)*
CL-50-TVR	5/16-18	.375	.486	.597	.625	1	3/16	1-1/4	1.308	.16	.421	3/4	.048	.096	7	1,500
CL-60-TVR	3/8-16	.438	.570	.684	.750	1-1/8	7/32	1-3/8	1.478	.19	.482	27/32	.052	.105	12	1,800
CL-80-TVR	1/2-13	.500	.635	.770	.875	1-1/4	5/16	1-1/2	1.706	.26	.569	15/16	.060	.114	15	2,100
CL-100-TVR	5/8-11	.625	.765	.905	1.125	1-1/2	3/8	1-3/4	2.104	.32	.706	1-1/8	.078	.120	36	4,000
CL-160-TVR	1"-8	1.000	1.159	1.318	1.875	2-1/4	3/4	2-1/2	3.350	1.00	1.119	1-3/4	.094	.138	175	12,000

V JAWS (METRIC)

CLM-50-TVR	M8	.375	.486	.597	.625	1	3/16	1-1/4	1.308	.16	4.21	3/4	.048	.096	7	1,500
CLM-60-TVR	M10	.438	.570	.684	.750	1-1/8	7/32	1-3/8	1.478	.19	.482	27/32	.052	.105	12	1,800
CLM-80-TVR	M12	.500	.635	.770	.875	1-1/4	5/16	1-1/2	1.706	.26	.569	15/16	.060	.114	15	2,100
CLM-100-TVR	M16	.625	.765	.905	1.125	1-1/2	3/8	1-3/4	2.104	.32	.706	1-1/8	.078	.120	36	4,000
CLM-160-TVR	M24	1.000	1.159	1.318	1.875	2-1/4	3/4	2-1/2	3.350	1.00	1.119	1-3/4	.094	.138	175	12,000

*Recommended torque and clamping force are at 1/3 of yield strength, leaving 2/3 of holding capacity to resist external cutting forces, etc.

Carr Lane®
MANUFACTURING CO.
4200 Carr Lane Ct., P.O. Box 191970
St. Louis, Missouri 63119-7970 USA
Phone: 314-647-6200, FAX: 314-647-5736
Web Site: www.carrlane.com

(Rev. 12-07)

SERRATED EDGE CLAMPS

BODY AND NOSE: 1018 STEEL, CARBURIZED-HARDENED, BLACK OXIDE FINISH
CLAMPING SCREW: 4140 STEEL, HEAT TREATED RC 43-45, BLACK OXIDE FINISH
NOSE COVER: ALUMINUM

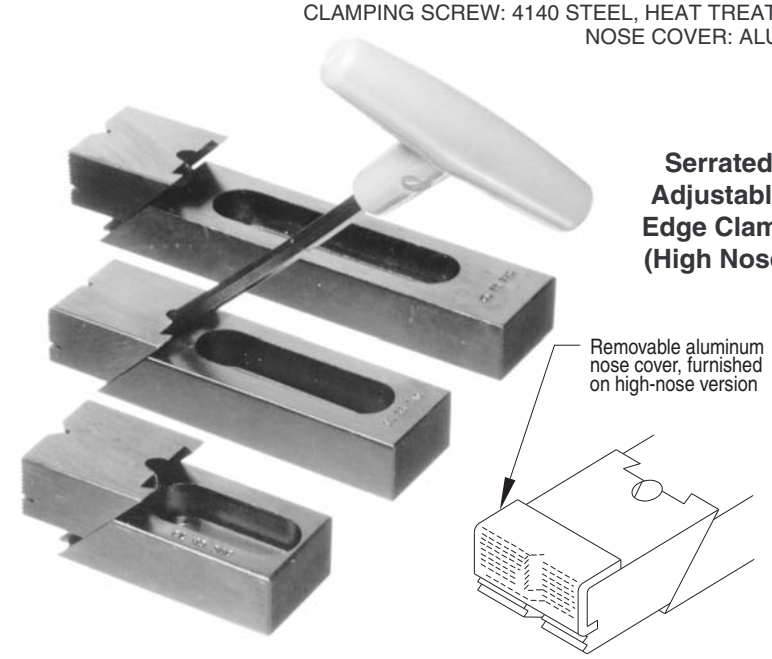

Serrated Adjustable Edge Clamp (High Nose)

High Nose

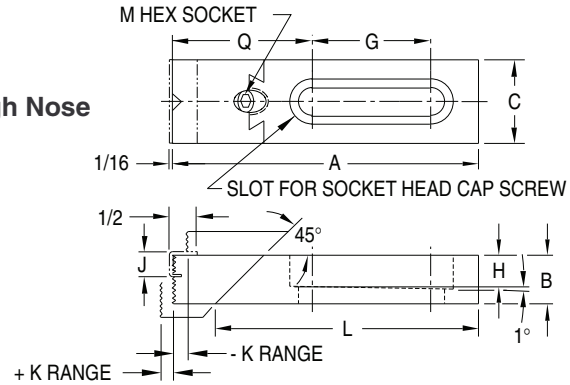

Low Nose

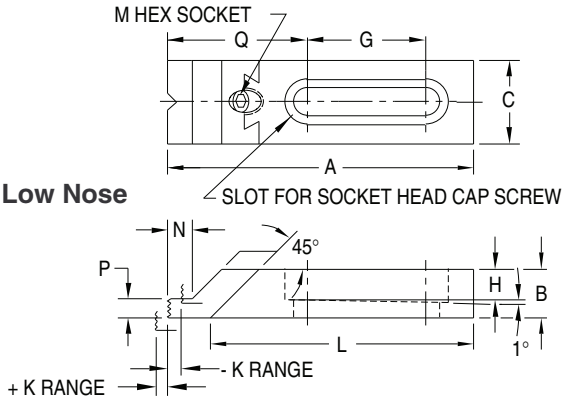

This low-profile clamp is ideal for gripping the side of a workpiece to keep the top clear for machining. Clamps both forward and down simultaneously, by tightening the socket-head screw in the sliding nose with a hex wrench. V-groove in nose is excellent for clamping round parts or corners. Choice of five sizes, each available in several slot lengths. Slot is tapered to prevent the clamp from backing off under heavy forces. Use two mounting screws on longer clamps.

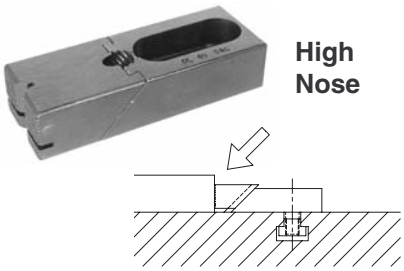

High Nose

High-nose version is best for most applications. Gripping high up on the workpiece, close to the machining plane, provides maximum clamping rigidity. A removable aluminum nose cover is furnished for clamping soft or machined parts without damage.

ADJUSTABLE — HIGH NOSE

PART NO.	MOUNTING SCREW SIZE	A	B	C	G	H	J	K	L	M	N	P	Q
CL-1-SAC	5/16-18 or M8	2	5/8	1	1/4	9/32	7/16	1/4	1-1/2	5/32	—	—	1-3/8
CL-5-SAC		3			1-1/4				2-1/2				
CL-15-SAC	3/8-16 or M10	3	5/8	1-1/4	13/16	3/8	7/16	1/4	2-3/8	3/16	—	—	1-11/16
CL-25-SAC		4-1/4			1-7/16				3-5/8				2-1/16
CL-35-SAC		5			2-1/8				4-3/8				1-7/8
CL-45-SAC	1/2-13 or M12	4	7/8	1-1/2	1-1/4	1/2	5/8	5/16	3-3/16	1/4	—	—	2-1/4
CL-55-SAC		5-1/2			2-1/8				4-11/16				2-1/2
CL-65-SAC		7-1/8			3				6-5/16				2-9/16
CL-75-SAC	5/8-11 or M16	5-1/2	1-1/4	1-3/4	1-3/8	5/8	3/4	5/16	4-1/2	5/16	—	—	3-9/32
CL-95-SAC		8-1/4			4				7-1/4				3
CL-105-SAC	3/4-10 or M20	5-1/2	1-1/4	1-3/4	1-3/8	3/4	3/4	5/16	4-1/2	5/16	—	—	3-9/32
CL-125-SAC		8-1/4			4				7-1/4				3

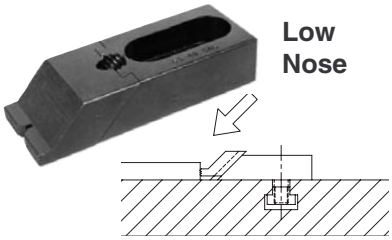

Low Nose

Low-nose version is ideal for thin parts, with its extra machining clearance.

ADJUSTABLE — LOW NOSE

CL-0-SAC	5/16-18 or M8	2	5/8	1	1/4	9/32	—	1/4	1-1/2	5/32	1/8	1/8	1-3/8
CL-00-SAC		3			1-1/4				2-1/2				
CL-10-SAC	3/8-16 or M10	3	5/8	1-1/4	13/16	3/8	—	1/4	2-3/8	3/16	1/4	1/4	1-11/16
CL-20-SAC		4-1/4			1-7/16				3-5/8				2-1/16
CL-30-SAC		5			2-1/8				4-3/8				1-7/8
CL-40-SAC	1/2-13 or M12	4	7/8	1-1/2	1-1/4	1/2	—	5/16	3-3/16	1/4	1/4	1/4	2-1/4
CL-50-SAC		5-1/2			2-1/8				4-11/16				2-1/2
CL-60-SAC		7-1/8			3				6-5/16				2-9/16
CL-70-SAC	5/8-11 or M16	5-1/2	1-1/4	1-3/4	1-3/8	5/8	—	5/16	4-1/2	5/16	5/16	3/8	3-9/32
CL-90-SAC		8-1/4			4				7-1/4				3
CL-100-SAC	3/4-10 or M20	5-1/2	1-1/4	1-3/4	1-3/8	3/4	—	5/16	4-1/2	5/16	5/16	3/8	3-9/32
CL-120-SAC		8-1/4			4				7-1/4				3

Carr Lane MANUFACTURING CO.
4200 Carr Lane Ct., P.O. Box 191970
St. Louis, Missouri 63119-7970 USA
Phone: 314-647-6200, FAX: 314-647-5736
Web Site: www.carrlane.com

(Rev. 12-07)

SERRATED EDGE CLAMPS

BODY AND NOSE: 1018 STEEL, CARBURIZED-HARDENED, BLACK OXIDE FINISH
CLAMPING SCREW: 4140 STEEL, HEAT TREATED RC 43-45, BLACK OXIDE FINISH
NOSE COVER: ALUMINUM

Serrated Fixed Edge Clamp (High Nose)

Serrated Fixed Edge Clamp (Low Nose)

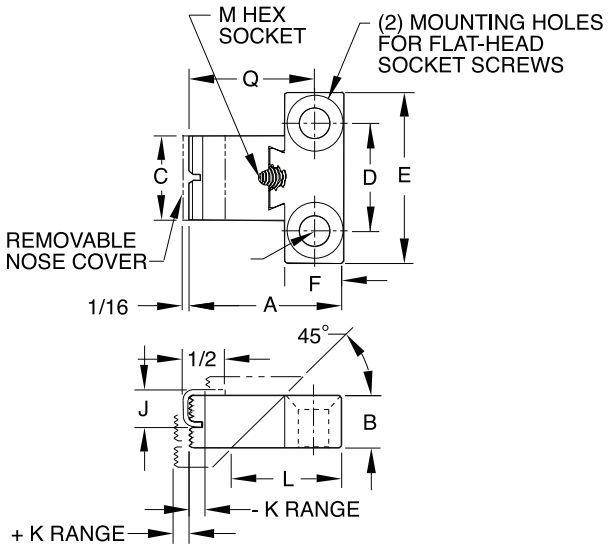

High Nose

Serrated Fixed Edge Clamps mount in a fixed position, rather than having a slot for adjustment. This makes the clamps more compact and ensures that they are mounted in the correct location without requiring adjustment. The fixed version is usually better for permanent fixtures, while the adjustable version is better for machine-table mounting. The Flat-Head Socket Screws used for mounting absolutely hold proper location (order separately). Choice of three clamp sizes, with either a high nose or low nose.

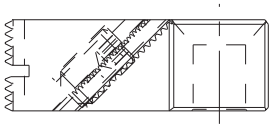

High Nose

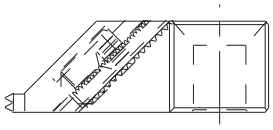

Low Nose

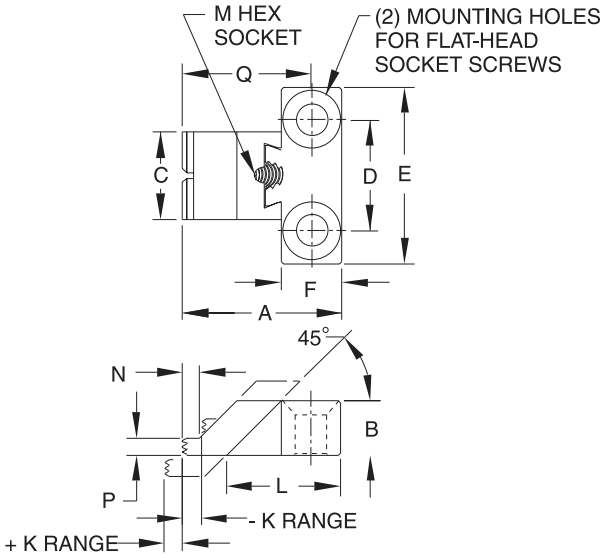

Low Nose

FIXED POSITION — HIGH NOSE

PART NO.	MOUNTING SCREW SIZE	A	B	C	D	E	F	J	K	L	M	N	P	Q	FLAT-HEAD SOCKET SCREWS (2 REQ'D) ORDER SEPARATELY
CL-5-SFC	5/16-18	1-13/16	5/8	1	1	1-3/4	11/16	7/16	1/4	1-5/16	5/32	—	—	1-15/32	CL-5/16-18x1.00-FHSS
CL-45-SFC	1/2-13	2-11/16	7/8	1-1/2	2	3	1	5/8	5/16	1-7/8	1/4	—	—	2-3/16	CL-1/2-13x1.38-FHSS
CL-75-SFC	5/8-11	3-1/2	1-1/4	1-3/4	2	3-1/4	1-1/4	3/4	5/16	2-1/2	5/16	—	—	2-7/8	CL-5/8-11x2.00-FHSS

FIXED POSITION — LOW NOSE

CL-0-SFC	5/16-18	1-13/16	5/8	1	1	1-3/4	11/16	7/16	1/4	1-5/16	5/32	1/8	1/8	1-15/32	CL-5/16-18x1.00-FHSS
CL-40-SFC	1/2-13	2-11/16	7/8	1-1/2	2	3	1	5/8	5/16	1-7/8	1/4	1/4	1/4	2-3/16	CL-1/2-13x1.38-FHSS
CL-70-SFC	5/8-11	3-1/2	1-1/4	1-3/4	2	3-1/4	1-1/4	3/4	5/16	2-1/2	5/16	5/16	3/8	2-7/8	CL-5/8-11x2.00-FHSS

Carr Lane®
MANUFACTURING CO.
4200 Carr Lane Ct., P.O. Box 191970
St. Louis, Missouri 63119-7970 USA
Phone: 314-647-6200, FAX: 314-647-5736
Web Site: www.carrlane.com

(Rev. 12-07)

SERRATED EDGE CLAMPS

BODY AND NOSE: 1018 STEEL, CARBURIZED-HARDENED, BLACK OXIDE FINISH
CLAMPING SCREW: 4140 STEEL, HEAT TREATED RC 43-45, BLACK OXIDE FINISH
NOSE COVER: ALUMINUM

Serrated Double Edge Clamp (High Nose)

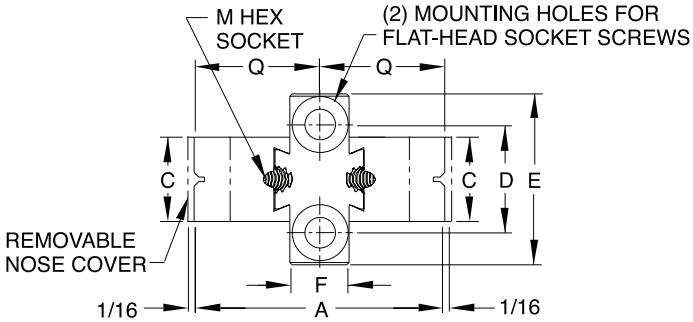

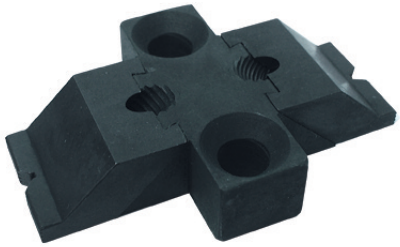

Serrated Double Edge Clamp (Low Nose)

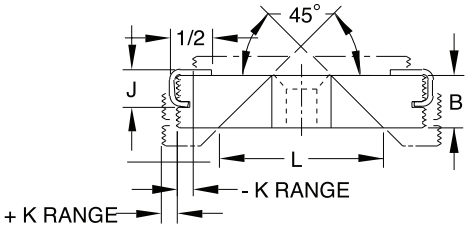

High Nose

Serrated Double Edge Clamps allow holding two workpieces with a single clamp. Double Edge Clamps mount in a fixed position between the two workpieces, then clamp outward with each nose operating independently. The Flat-Head Socket Screws used for mounting absolutely hold proper location (order separately). Choice of three clamp sizes, with either a high nose or low nose.

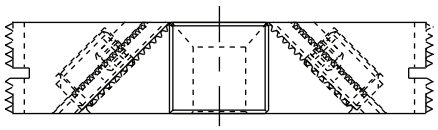

High Nose

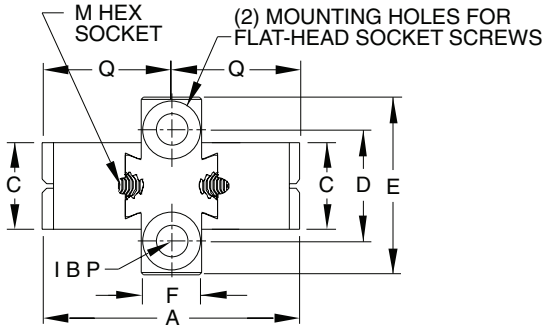

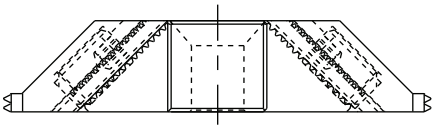

Low Nose

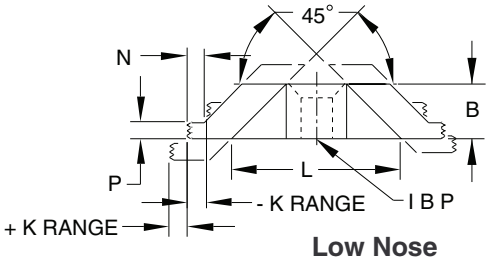

Low Nose

DOUBLE — HIGH NOSE

PART NO.	MOUNTING SCREW SIZE	A	B	C	D	E	F	J	K	L	M	N	P	Q	FLAT-HEAD SOCKET SCREWS (2 REQ'D) ORDER SEPARATELY
CL-5-SDC	5/16-18	2-15/16	5/8	1	1	1-3/4	11/16	7/16	1/4	2	5/32	—	—	1-15/32	CL-5/16-18x1.00-FHSS
CL-45-SDC	1/2-13	4-3/8	7/8	1-1/2	2	3	1	5/8	5/16	2-3/4	1/4	—	—	2-3/16	CL-1/2-13x1.38-FHSS
CL-75-SDC	5/8-11	5-3/4	1-1/4	1-3/4	2	3-1/4	1-1/4	3/4	5/16	3-3/4	5/16	—	—	2-7/8	CL-5/8-11x2.00-FHSS

DOUBLE — LOW NOSE

CL-0-SDC	5/16-18	2-15/16	5/8	1	1	1-3/4	11/16	7/16	1/4	2	5/32	1/8	1/8	1-15/32	CL-5/16-18x1.00-FHSS
CL-40-SDC	1/2-13	4-3/8	7/8	1-1/2	2	3	1	5/8	5/16	2-3/4	1/4	1/4	1/4	2-3/16	CL-1/2-13x1.38-FHSS
CL-70-SDC	5/8-11	5-3/4	1-1/4	1-3/4	2	3-1/4	1-1/4	3/4	5/16	3-3/4	5/16	5/16	3/8	2-7/8	CL-5/8-11x2.00-FHSS

Carr Lane®
MANUFACTURING CO.
4200 Carr Lane Ct., P.O. Box 191970
St. Louis, Missouri 63119-7970 USA
Phone: 314-647-6200, FAX: 314-647-5736
Web Site: www.carrlane.com

(Rev. 4-08)

CAM EDGE CLAMPS

BODY: STEEL, WEAR SURFACES HARDENED, BLACK OXIDE FINISH
BALL HANDLE: BLACK PHENOLIC PLASTIC

Fixed Base

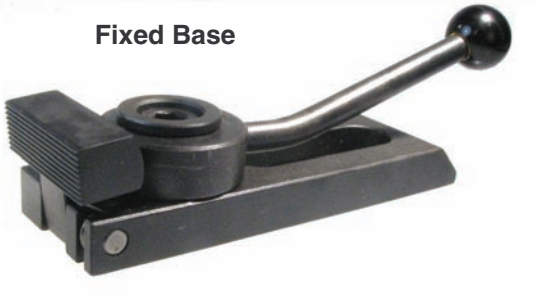

Slotted Base

Pivoting-nose edge clamp operated by a cam handle for fast action. Smooth spiral cam locks positively anywhere within its 180° throw. Choice of two sizes. Available with either a standard base for fixed-position mounting, or a slotted base for adjustable mounting. Choice of clockwise or counter-clockwise handle rotation to clamp.

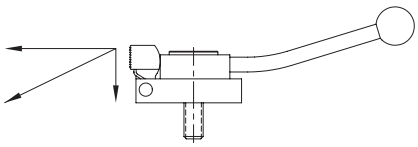

Nose pivots to exert clamping force forward and downward at the same time.

Fixed Base

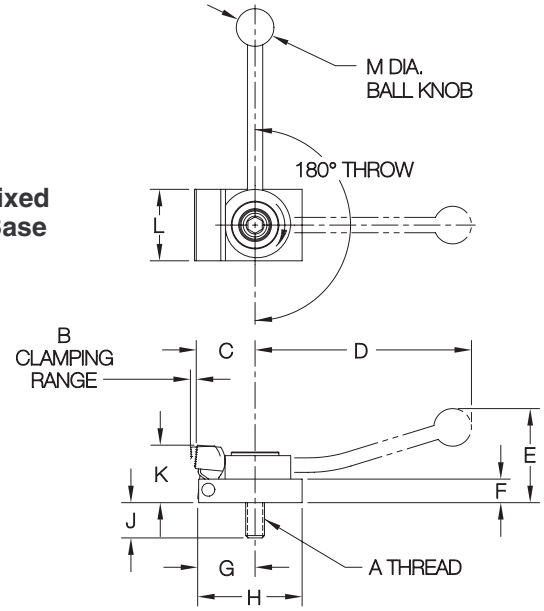

Slotted Base

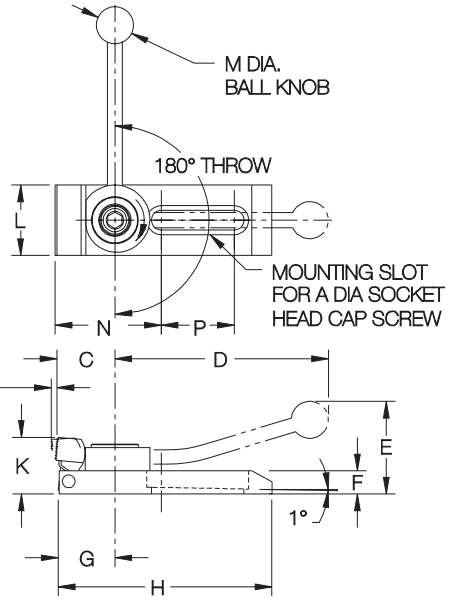

FIXED BASE (USA)

PART NO. CLOCKWISE CLAMPING	PART NO. CCW CLAMPING	A	B	C	D	E	F	G	H	J	K MIN	K MAX	L	M	N	P	MAX CLAMPING FORCE (LBS) HORIZONTAL	MAX CLAMPING FORCE (LBS) VERTICAL
CL-MF25-5601	CL-MF25-5602	5/16-18	5/32	1-1/8	3-15/16	1-5/8	7/16	15/16	1-3/4	11/16	7/8	1	1-1/4	3/4	—	—	750	50
CL-MF40-5601	CL-MF40-5602	1/2-13	7/32	1-9/16	5-3/4	2-1/2	5/8	1-1/2	2-3/4	15/16	1-5/16	1-1/2	1-7/8	1	—	—	1500	100

FIXED BASE (METRIC)

CL-MF08-5601	CL-MF08-5602	M8	5/32	1-1/8	3-15/16	1-5/8	7/16	15/16	1-3/4	.31	7/8	1	1-1/4	3/4	—	—	750	50
CL-MF12-5601	CL-MF12-5602	M12	7/32	1-9/16	5-3/4	2-1/2	5/8	1-1/2	2-3/4	.47	1-5/16	1-1/2	1-7/8	1	—	—	1500	100

SLOTTED BASE

CL-MF25-5611	CL-MF25-5612	5/16-18 or M8	5/32	1-1/8	3-15/16	1-5/8	7/16	15/16	3-1/2	—	7/8	1	1-1/4	3/4	2	1	750	50
CL-MF40-5611	CL-MF40-5612	1/2-13 or M12	7/32	1-9/16	5-3/4	2-1/2	5/8	1-1/2	6	—	1-5/16	1-1/2	1-7/8	1	2-15/16	2	1500	100

Carr Lane®
MANUFACTURING CO.
4200 Carr Lane Ct., P.O. Box 191970
St. Louis, Missouri 63119-7970 USA
Phone: 314-647-6200, FAX: 314-647-5736
Web Site: www.carrlane.com

(Rev. 12-07)

UP-THRUST CLAMPS

STEEL, WEAR SURFACES HARDENED, BLACK OXIDE FINISH

Combination clamp and locator with a unique upward clamping action. Pushing down the cam handle pulls the lower jaw upward. This clamps the workpiece against the stationary upper jaw, whose bottom surface is a precision-ground locator.

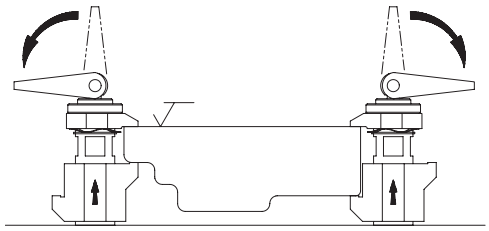

Up-Thrust Clamps locate off of the part's top surface and clamp up from below.

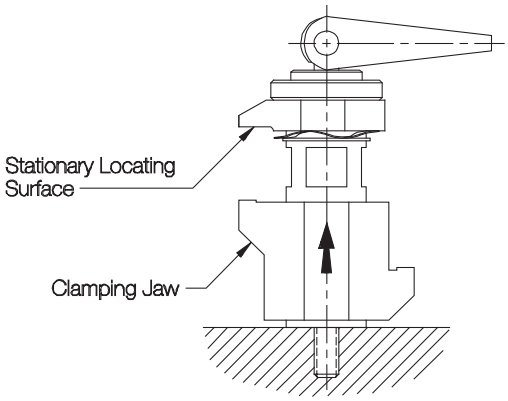

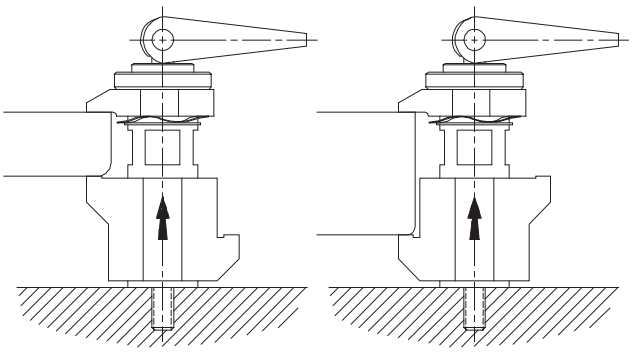

The lower jaw has two clamping surfaces 180° apart, one for thinner parts, the other for thicker parts. The cam handle rotates to screw the lower jaw up or down for fine adjustment.

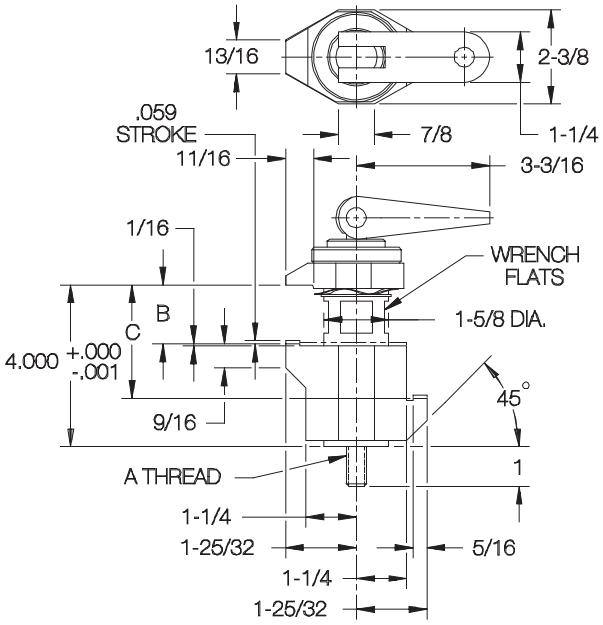

PART NO.	A	B RANGE MIN	B RANGE MAX	C RANGE MIN	C RANGE MAX	MAX CLAMPING FORCE (LBS)
CL-MF40-5301	1/2-13	0	1-3/8	1-3/8	2-3/4	2200

Carr Lane MANUFACTURING CO.
4200 Carr Lane Ct., P.O. Box 191970
St. Louis, Missouri 63119-7970 USA
Phone: 314-647-6200, FAX: 314-647-5736
Web Site: www.carrlane.com

(Rev. 12-07)

HOOK CLAMPS

CLAMP BODY: 12L14 STEEL, CARBURIZED-HARDENED, BLACK OXIDE FINISH

Standard Arm Socket Head

Extremely compact swing clamp that mounts in a reamed hole. Ideal in tight spaces and where high clamping forces are required. Choice of socket head (counterbored) or hex-nut type.

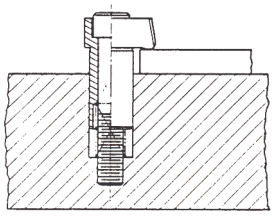

Compact assembly is easy to install in tight spaces. Socket-head type shown above offers a very low profile.

Standard Arm Hex Nut

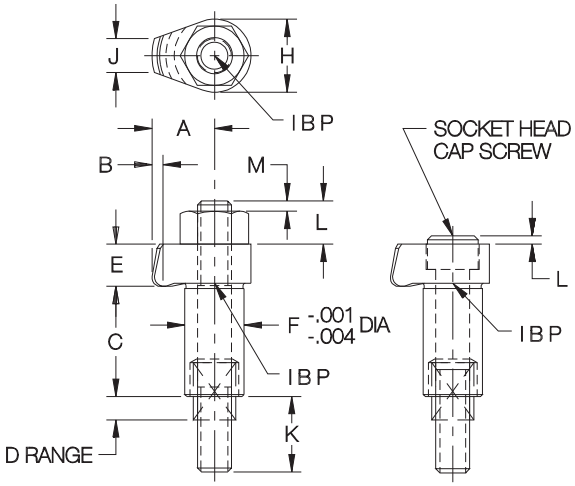

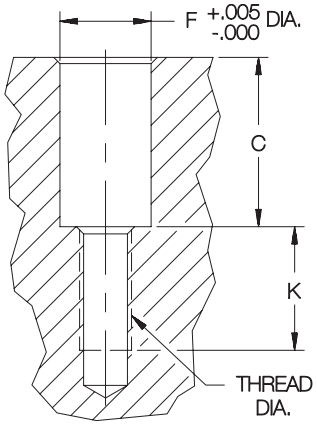

Installation Hole

STANDARD ARM, SOCKET HEAD (USA)

PART NO.	THREAD DIA	A	B	C	D CLAMPING RANGE	E	F DIA	H DIA	J	K	L	M
CL-1-CAC	5/16-18	.67	.08	.93	.25	.55	.625	.80	.40	.69	.12	—
CL-2-CAC	1/2-13	.92	.12	1.63	.50	.63	.875	1.08	.50	1.13		
CL-3-CAC	5/8-11	1.30	.18	1.83	.70	.90	1.125	1.38	.75	1.25		

STANDARD ARM, SOCKET HEAD (METRIC)

CLM-1-CAC	M8	.67	.08	.93	.25	.55	.625	.80	.40	.66	.12	—
CLM-2-CAC	M12	.92	.12	1.63	.50	.63	.875	1.08	.50	1.28		
CLM-3-CAC	M16	1.30	.18	1.83	.70	.90	1.125	1.38	.75	1.31		

STANDARD ARM, HEX NUT (USA)

CL-1-CA	5/16-18	.67	.08	.93	.25	.55	.625	.80	.40	1.14	.30	.06
CL-2-CA	1/2-13	.92	.12	1.63	.50	.63	.875	1.08	.50	1.19	.48	.08
CL-3-CA	5/8-11	1.30	.18	1.83	.70	.90	1.125	1.38	.75	1.57	.61	.09

STANDARD ARM, HEX NUT (METRIC)

CLM-1-CA	M8	.67	.08	.93	.25	.55	.625	.80	.40	.69	.32	.05
CLM-2-CA	M12	.92	.12	1.63	.50	.63	.875	1.08	.50	1.02	.47	.07
CLM-3-CA	M16	1.30	.18	1.83	.70	.90	1.125	1.38	.75	1.48	.63	.08

CarrLane® MANUFACTURING CO.
4200 Carr Lane Ct., P.O. Box 191970
St. Louis, Missouri 63119-7970 USA
Phone: 314-647-6200, FAX: 314-647-5736
Web Site: www.carrlane.com

(Rev. 7-08)

HOOK CLAMPS

CLAMP BODY: 4135 STEEL, HEAT TREATED, BLACK OXIDE FINISH
SOCKET-HEAD CAP SCREW, BLACK OXIDE FINISH
SPRING: SPRING STEEL, BLACK OXIDE FINISH

Long Arm Socket Head

Tapped Long Arm Socket Head

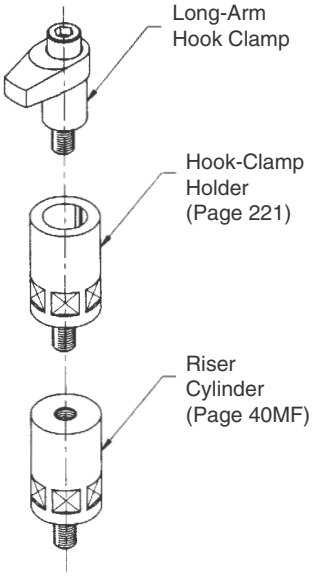

Long-arm Hook Clamps available with either a plain or tapped arm. The tapped-arm version accepts a wide variety of contact bolts or spindles to increase clamping-height range (the tapped arm is also slightly longer). Mounts in a reamed hole or in a Hook-Clamp Mounting Block or Holder (order separately). Ideal in tight spaces where high clamping force is required. Available in three sizes.

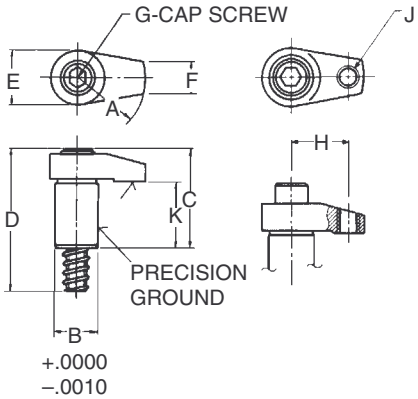

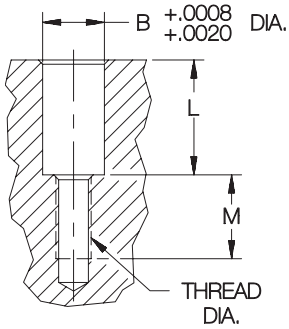

Installation Hole

LONG ARM, SOCKET HEAD (USA)

PART NO.	THREAD DIA	A	B	C	D	E	F	G	H	J	K	L	M	MAXIMUM ALLOWABLE TORQUE (FT-LBS)	MAXIMUM CLAMPING FORCE (LBS)
CL-MF25-5002	5/16-18	1	.7500	1-7/16	2-5/16	7/8	3/8	5/16-18x2.00	—	—	29/32	15/16	15/16	22	2200
CL-MF40-5002	1/2-13	2	1.0000	2-1/2	3-1/2	1-1/4	11/16	1/2-13x3.00	—	—	1-17/32	1-9/16	1	34	2700
CL-MF50-5002	5/8-11	2	1.2500	2-7/8	3-7/8	1-7/16	7/8	5/8-11x3.25	—	—	1-17/32	1-9/16	1	59	3700

TAPPED LONG ARM, SOCKET HEAD (USA)

CL-MF25-5013	5/16-18	1-3/16	.7500	1-7/16	2-5/16	7/8	3/8	5/16-18x2.00	15/16	5/16-18	29/32	15/16	15/16	22	2200
CL-MF40-5013	1/2-13	2-3/8	1.0000	2-1/2	3-1/2	1-1/4	11/16	1/2-13x3.00	1-13/16	1/2-13	1-17/32	1-9/16	1	34	2700
CL-MF50-5014	5/8-11	2-3/8	1.2500	2-7/8	3-7/8	1-7/16	7/8	5/8-11x3.25	1-13/16	5/8-11	1-17/32	1-9/16	1	59	3700

LONG ARM, SOCKET HEAD (METRIC)

CL-MF08-5002	M8	1	.7087(18mm)	1.46	2.28	.87	.39	M8x50mm	—	—	.91	.98	.84	22	2200
CL-MF12-5002	M12	2	.9843(25mm)	2.68	3.62	1.25	.69	M12x80mm	—	—	1.54	1.57	.96	34	2700
CL-MF16-5002	M16	2	1.2598(32mm)	2.95	3.98	1.44	.87	M16x85mm	—	—	1.54	1.57	.96	59	3700

TAPPED LONG ARM, SOCKET HEAD (METRIC)

CL-MF08-5013	M8	1.19	.7087(18mm)	1.46	2.28	.87	.39	M8x50mm	.94	M8	.98	.79	.84	22	2200
CL-MF12-5013	M12	2.38	.9843(25mm)	2.68	3.62	1.25	.69	M12x80mm	1.81	M12	1.54	1.57	.96	34	2700
CL-MF16-5013	M16	2.38	1.2598(32mm)	2.95	3.98	1.44	.87	M16x85mm	1.81	M12	1.54	1.57	.96	59	3700

CarrLane®
MANUFACTURING CO.
4200 Carr Lane Ct., P.O. Box 191970
St. Louis, Missouri 63119-7970 USA
Phone: 314-647-6200, FAX: 314-647-5736
Web Site: www.carrlane.com

(Rev. 11-09)

HOOK CLAMPS

MOUNTING BLOCKS AND HOLDERS: 1045 STEEL, BLACK OXIDE FINISH

NEW!

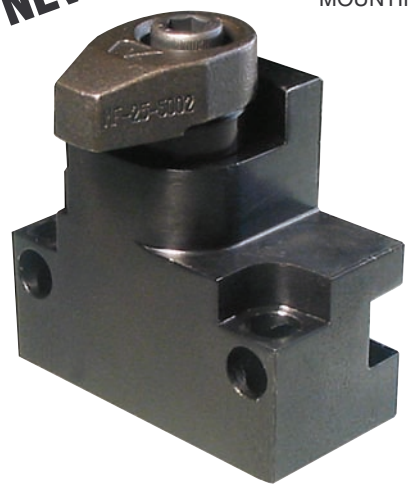

Hook-Clamp Mounting Block
(order Hook-Clamp separately)

These mounting blocks for long-arm Hook Clamps have built-in 90˚ stops that provide consistent arm positioning in both clamped and unclamped position. Two sets of mounting holes allow either base mounting or side mounting. Precision bored hole for smooth swing action. Available for all three sizes of long-arm Hook Clamps.

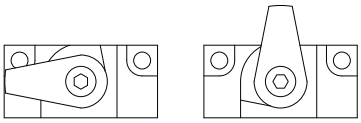

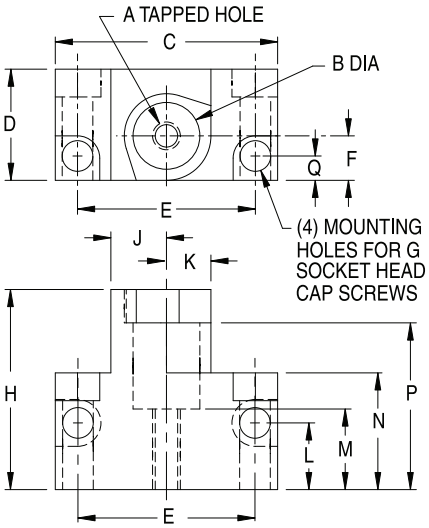

HOOK-CLAMP MOUNTING BLOCKS (USA)

PART NO.	A	B	C	D	E	F	G	H	J	K	L	M	N	P	Q
CL-MF25-5800	5/16-18	.7500	2-1/2	1-1/4	2	1/2	5/16-18 OR M8	2-1/4	5/8	1/2	3/4	29/32	1-5/16	1-7/8	1/4
CL-MF40-5800	1/2-13	1.0000	2-3/4	2	2	1	1/2-13 OR M12	3-1/2	1	3/4	1	1-5/32	1-7/8	2-3/4	3/8
CL-MF50-5800	5/8-11	1.0000	5	2	4	1	5/8-11 OR M16	4	1	1	1-1/4	1-5/32	2-1/4	2-3/4	1/2

HOOK-CLAMP MOUNTING BLOCKS (METRIC)

CL-MF08-5800	M8	.7087 (18mm)	1.97	1.00	1.50	.47	M6 or 1/4-20	2.28	.55	.55	.71	.91	.98	1.87	.25
CL-MF12-5800	M12	.9843 (25mm)	2.95	1.50	2.17	.65	M10 or 3/8-16	3.50	.79	.79	.94	1.16	1.38	2.64	.35
CL-MF16-5800	M16	1.2598 (32mm)	3.46	1.75	2.56	.77	M12 or 1/2-13	4.13	.94	.94	1.26	1.16	1.77	3.43	.39

Hook-Clamp Holder

Compact mounting adapter for long-arm Hook Clamps. Precision bored hole for smooth swing action.

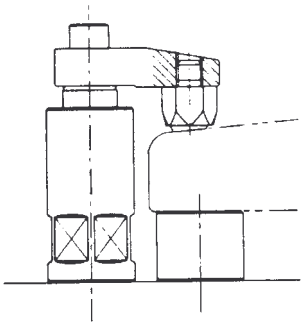

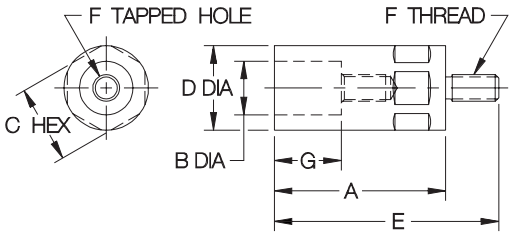

HOOK-CLAMP HOLDERS (USA)

PART NO.	F THREAD DIA	A	B DIA	C	D DIA	E	G
CL-MF25-5101	5/16-18	2-1/4	.7500	7/8	1	3	15/16
CL-MF40-5101	1/2-13	3-1/8	1.0000	1-7/16	1-9/16	4-3/8	1-9/16
CL-MF40-5102		4				5-1/4	
CL-MF50-5101	5/8-11	3-1/8	1.2500	1-3/4	2	4-3/8	1-9/16
CL-MF50-5102		4				5-1/4	

HOOK-CLAMP HOLDERS (METRIC)

CL-MF08-5101	M8	2.17	.7087 (18mm)	.87 (22mm)	.94	2.91	.98
CL-MF12-5101	M12	3.15	.9843 (25mm)	1.42 (36mm)	1.57	4.33	1.57
CL-MF16-5101	M16	3.15	1.2598 (32mm)	1.81 (46mm)	1.97	4.33	1.57

Carr Lane MANUFACTURING CO.
4200 Carr Lane Ct., P.O. Box 191970
St. Louis, Missouri 63119-7970 USA
Phone: 314-647-6200, FAX: 314-647-5736
Web Site: www.carrlane.com

(Rev. 12-07)

SWING CLAMP ASSEMBLIES

ARM: NODULAR IRON PER ASTM A536 GRADE 65-45-12, ZINC PLATED CLEAR CHROMATE
SEE PAGES 60, 108, AND 221 FOR OTHER MATERIAL SPECIFICATIONS
ALL OTHER PARTS: MILD STEEL, BLACK OXIDE FINISH

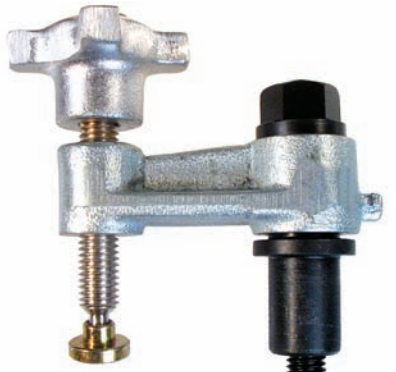

Knob Handle Post Mounted

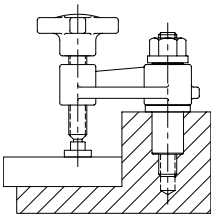

Long-reach swing clamp that can be hand tightened for medium clamping force. The post-mounted version is ideal for tight spaces, with a long mounting post for increased strength. Swing arm can be turned over for more clearance underneath. Install in a reamed hole. To order with a Delrin® foot instead of steel, add "N" to the part number. Example: CL-1-SWA-1N.

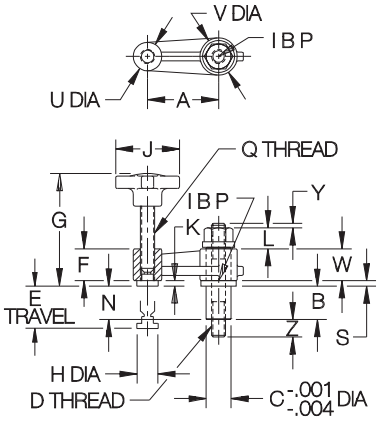

KNOB HANDLE, POST MOUNTED (USA)

PART NO.	D THREAD SIZE	A	B	C DIA NOMINAL	C DIA ACTUAL	E	F	G	H DIA	J	K	L	N	Q	S	U DIA	V DIA	W	Y	Z
CL-1-SWA-1	5/16-18	1-1/2	.80	9/16	.563	.69	3/4	2.45	1/2	1-3/4	5/32	3/8	.68	5/16-18	.16	11/16	15/16	3/4	.11	.80
CL-4-SWA-1	1/2-13	2	1.18	7/8	.875	1.50	1-1/8	3.88	3/4	2-1/8	3/16	11/16	.99	1/2-13	.19	1	1-5/16	1-1/8	.15	.67
CL-5-SWA-1		2-1/2																		
CL-2-SWA-1	5/8-11	3	1.55	1-1/8	1.125	1.59	1-5/16	4.56	15/16	2-3/4	7/32	13/16	1.33	5/8-11	.22	1-5/16	1-3/4	1-1/2	.18	.74
CL-3-SWA-1		4																		

KNOB HANDLE, POST MOUNTED (METRIC)

CLM-1-SWA-1	M8	1-1/2	.80	14mm	.551	.69	3/4	2.45	1/2	1-3/4	5/32	.39	.68	5/16-18	.16	11/16	15/16	3/4	.10	.95
CLM-4-SWA-1	M12	2	1.18	22mm	.866	1.50	1-1/8	3.88	3/4	2-1/8	3/16	.67	.99	1/2-13	.19	1	1-5/16	1-1/8	.14	1.01
CLM-5-SWA-1		2-1/2																		
CLM-2-SWA-1	M16	3	1.55	28mm	1.102	1.59	1-5/16	4.56	15/16	2-3/4	7/32	.83	1.33	5/8-11	.22	1-5/16	1-3/4	1-1/2	.16	.66
CLM-3-SWA-1		4																		

Ball Handle Post Mounted

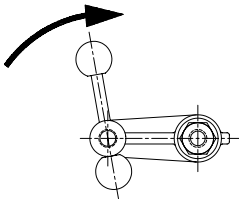

Same as above, except with a sliding ball handle for increased leverage.

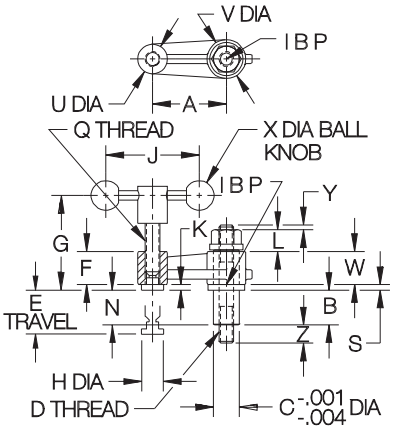

BALL HANDLE, POST MOUNTED (USA)

PART NO.	D THREAD SIZE	A	B	C DIA NOMINAL	C DIA ACTUAL	E	F	G	H DIA	J	K	L	N	Q	S	U DIA	V DIA	W	X	Y	Z
CL-1-SWA-2	5/16-18	1-1/2	.80	9/16	.563	.88	3/4	2.39	1/2	2-1/4	5/32	3/8	.68	5/16-18	.16	11/16	15/16	3/4	3/4	.11	.80
CL-4-SWA-2	1/2-13	2	1.18	7/8	.875	.96	1-1/8	3.53	3/4	2-5/8	3/16	11/16	.99	1/2-13	.19	1	1-5/16	1-1/8	1	.15	.67
CL-5-SWA-2		2-1/2																			
CL-2-SWA-2	5/8-11	3	1.55	1-1/8	1.125	1.65	1-5/16	4.50	15/16	3	7/32	13/16	1.33	5/8-11	.22	1-5/16	1-3/4	1-1/2	1-3/8	.18	.74
CL-3-SWA-2		4																			

BALL HANDLE, POST MOUNTED (METRIC)

CLM-1-SWA-2	M8	1-1/2	.80	14mm	.551	.88	3/4	2.39	1/2	2-1/4	5/32	.39	.68	5/16-18	.16	11/16	15/16	3/4	3/4	.10	.95
CLM-4-SWA-2	M12	2	1.18	22mm	.866	.96	1-1/8	3.53	3/4	2-5/8	3/16	.67	.99	1/2-13	.19	1	1-5/16	1-1/8	1	.14	1.01
CLM-5-SWA-2		2-1/2																			
CLM-2-SWA-2	M16	3	1.55	28mm	1.102	1.65	1-1/2	4.50	15/16	3	7/32	.83	1.33	5/8-11	.22	1-5/16	1-3/4	1-1/2	1-3/8	.16	.66
CLM-3-SWA-2		4																			

Carr Lane®
MANUFACTURING CO.
4200 Carr Lane Ct., P.O. Box 191970
St. Louis, Missouri 63119-7970 USA
Phone: 314-647-6200, FAX: 314-647-5736
Web Site: www.carrlane.com

(Rev. 12-07)

SWING CLAMP ASSEMBLIES

ARM: NODULAR IRON PER ASTM A536 GRADE 60-40-18, ZINC PLATED CLEAR CHROMATE
SEE PAGES 60, 108, AND 221 FOR OTHER MATERIAL SPECIFICATIONS
ALL OTHER PARTS: MILD STEEL, BLACK OXIDE FINISH

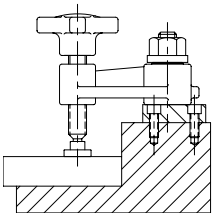

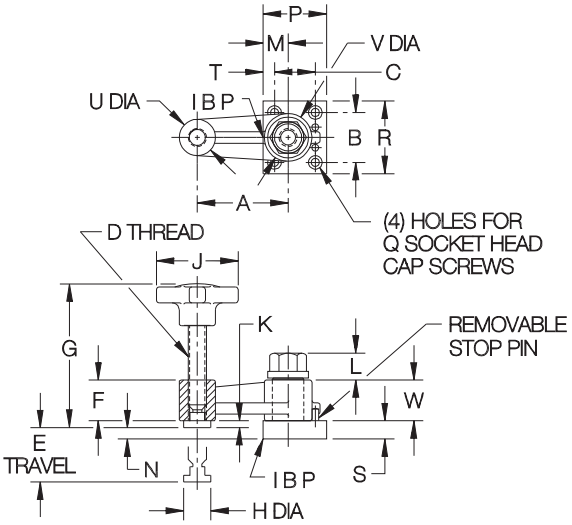

Knob Handle
Flange Mounted

Long-reach swing clamp that can be hand tightened for medium clamping force. The flange-mounted version is ideal for mounting on flat surfaces. The stop pin furnished can be installed on either side for clockwise or counterclockwise rotation. Swing arm can be turned over for more clearance underneath. To order with a Delrin® foot instead of steel, add "N" to the part number. Example: CL-1-SWA-3N.

KNOB HANDLE, FLANGE MOUNTED

PART NO.	D THREAD SIZE	A	B	C	E	F	G	H DIA	J	K	L	M	N	P	Q	R	S	T	U	V	W
CL-1-SWA-3	5/16-18	1-1/2	1	3/4	.69	3/4	2.45	1/2	1-3/4	5/32	.33	1/2	.25	1-1/4	#10 or M5	1-1/2	3/8	1/4	11/16	15/16	3/4
CL-4-SWA-3	1/2-13	2	1-3/8	1-1/8	1.50	1-1/8	3.88	3/4	2-1/8	3/16	.44	11/16	.31	1-3/4	1/4 or M6	2	1/2	5/16	1	1-5/16	1-1/8
CL-5-SWA-3		2-1/2																			
CL-2-SWA-3	5/8-11	3	1-1/2	1-1/4	1.59	1-5/16	4.56	15/16	2-3/4	7/32	.58	1	.53	2-1/4	3/8 or M10	2-1/4	3/4	3/8	1-5/16	1-3/4	1-1/2
CL-3-SWA-3		4																			

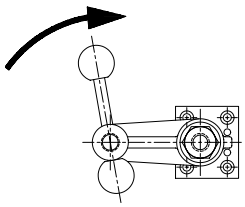

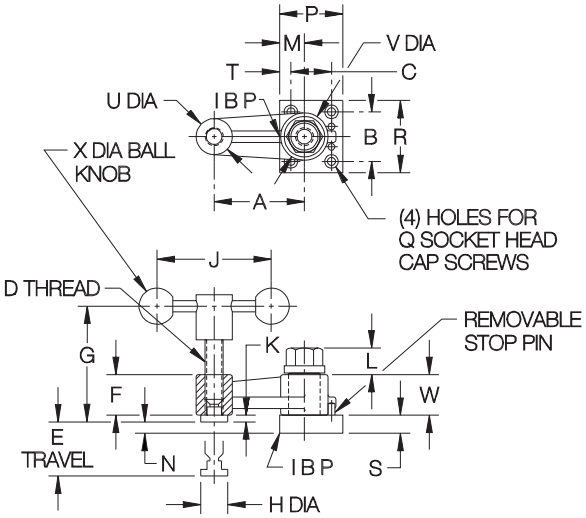

Ball Handle
Flange Mounted

Same as above, except with a sliding ball handle for increased leverage.

BALL HANDLE, FLANGE MOUNTED

PART NO.	D THREAD SIZE	A	B	C	E	F	G	H DIA	J	K	L	M	N	P	Q	R	S	T	U	V	W	X
CL-1-SWA-4	5/16-18	1-1/2	1	3/4	.88	3/4	2.39	1/2	2-1/4	5/32	.33	1/2	.25	1-1/4	#10 or M5	1-1/2	3/8	1/4	11/16	15/16	3/4	3/4
CL-4-SWA-4	1/2-13	2	1-3/8	1-1/8	.96	1-1/8	3.53	3/4	2-5/8	3/16	.44	11/16	.31	1-3/4	1/4 or M6	2	1/2	5/16	1	1-5/16	1-1/8	1
CL-5-SWA-4		2-1/2																				
CL-2-SWA-4	5/8-11	3	1-1/2	1-1/4	1.65	1-5/16	4.50	15/16	3	7/32	.58	1	.53	2-1/4	3/8 or M10	2-1/4	3/4	3/8	1-5/16	1-3/4	1-1/2	1-3/8
CL-3-SWA-4		4																				

Carr Lane®
MANUFACTURING CO.
4200 Carr Lane Ct., P.O. Box 191970
St. Louis, Missouri 63119-7970 USA
Phone: 314-647-6200, FAX: 314-647-5736
Web Site: www.carrlane.com

(Rev. 7-10)

ACORN NUTS

12L14 STEEL, CARBURIZED-HARDENED, BLACK OXIDE FINISH

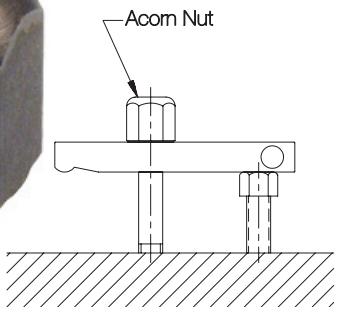

Closed end covers the end of a stud to prevent snags or thread damage.

USA

PART NO.	A	B	C	D
CL-0-AN	1/4-20	1/2	3/8	1/2
CL-1-AN	5/16-18	5/8	13/32	5/8
CL-5-AN	3/8-16	3/4	7/16	3/4
CL-2-AN	1/2-13	7/8	9/16	15/16
CL-3-AN	5/8-11	1-1/16	13/16	1-3/16
CL-4-AN	3/4-10	1-1/4	1	1-3/8

METRIC

CLM-6-AN	M6	10mm	.39	.59
CLM-8-AN	M8	13mm		
CLM-10-AN	M10	17mm		.79
CLM-12-AN	M12	19mm	.59	.98
CLM-16-AN	M16	24mm	.79	1.18
CLM-20-AN	M20	30mm	.98	1.38

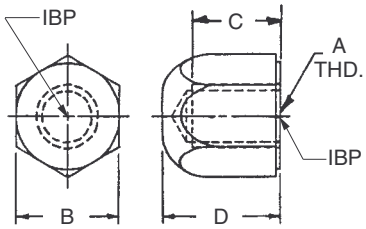

KNURLED NUTS

12L14 STEEL, BLACK OXIDE FINISH

ADDITIONAL SIZES NOW AVAILABLE!

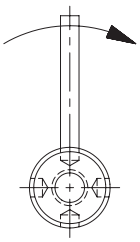

Heavy lock nut that can be tightened by hand or with an extension rod (1/4" or 6mm diameter). Large contact surface.

USA

PART NO.	A	B DIA	C DIA	D	E	F DIA
CL-0-KN	1/4-20	1-1/8	1	7/16	1/16	.257
CL-00-KN	5/16-18					
CL-1-KN	3/8-16					
CL-2-KN	1/2-13					
CL-3-KN	5/8-11	1-3/8				

METRIC

CLM-6-KN	M6	1.12	.98	.43	.80	.256
CLM-8-KN	M8					
CLM-10-KN	M10					
CLM-12-KN	M12					
CLM-16-KN	M16	1.38				

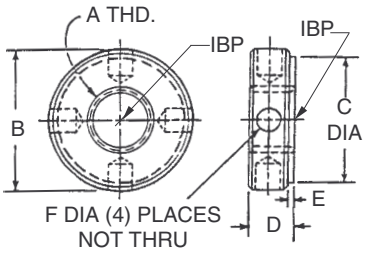

KNURLED CHECK NUTS

12L14 STEEL, BLACK OXIDE FINISH

Multipurpose lock nut for finger tightening.

USA

PART NO.	A	B DIA	C DIA	D	E
CL-1024-TSJN	#10-24	3/4	1/2	1/4	3/16
CL-1032-TSJN	#10-32				
CL-1420-TSJN	1/4-20				
CL-51618-TSJN	5/16-18			5/16	1/4
CL-3816-TSJN	3/8-16				
CL-1213-TSJN	1/2-13	1	3/4	3/8	1/4
CL-5811-TSJN	5/8-11				

METRIC

CLM-5-TSJN	M5	.75	.51	.24	.20
CLM-6-TSJN	M6				
CLM-8-TSJN	M8			.31	.28
CLM-10-TSJN	M10				
CLM-12-TSJN	M12	.98	.75	.39	.31
CLM-16-TSJN	M16				

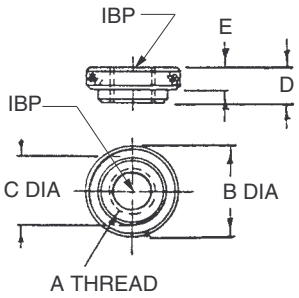

CarrLane®
MANUFACTURING CO.
4200 Carr Lane Ct., P.O. Box 191970
St. Louis, Missouri 63119-7970 USA
Phone: 314-647-6200, FAX: 314-647-5736
Web Site: www.carrlane.com

(Rev. 7-10)

HEX NUTS

STEEL: MILD STEEL, BLACK OXIDE FINISH
STAINLESS STEEL: 300-SERIES, PASSIVATE FINISH

High-quality heavy hex nut, available in steel or stainless steel.

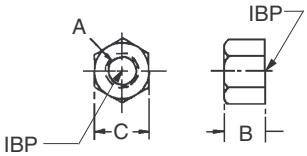

USA

STEEL PART NO.	STAINLESS STEEL PART NO.	A THREAD	B	C
CL-4-HN	CL-4-HN-S	1/4-20	15/64	1/2
CL-5-HN	CL-5-HN-S	5/16-18	19/64	9/16
CL-6-HN	CL-6-HN-S	3/8-16	23/64	11/16
CL-8-HN	CL-8-HN-S	1/2-13	31/64	7/8
CL-10-HN	CL-10-HN-S	5/8-11	39/64	1-1/16
CL-12-HN	CL-12-HN-S	3/4-10	47/64	1-1/4
CL-14-HN	—	7/8-9	55/64	1-7/16
CL-16-HN	—	1"-8	63/64	1-5/8
CL-20-HN	—	1-1/4"-7	1-7/32	2

USA FINE

CL-4-FHN	CL-4-FHN-S	1/4-28	7/32	7/16
CL-5-FHN	CL-5-FHN-S	5/16-24	17/64	1/2
CL-6-FHN	CL-6-FHN-S	3/8-24	21/64	9/16
CL-8-FHN	CL-8-FHN-S	1/2-20	7/16	3/4
CL-10-FHN	—	5/8-18	35/64	15/16
CL-12-FHN	—	3/4-16	41/64	1-1/8

METRIC

STEEL PART NO.	STAINLESS STEEL PART NO.	A THREAD	B	C
CLM-6-HN	—	M6	.20	10mm
CLM-8-HN	—	M8	.26	13mm
CLM-10-HN	—	M10	.31	17mm
CLM-12-HN	—	M12	.39	19mm
CLM-16-HN	—	M16	.51	24mm
CLM-20-HN	—	M20	.63	30mm
CLM-24-HN	—	M24	.75	36mm
CLM-30-HN	—	M30	.94	46mm

JAM NUTS

STEEL: MILD STEEL, BLACK OXIDE FINISH
STAINLESS STEEL: 300-SERIES, PASSIVATE FINISH

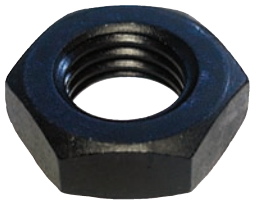

High-quality heavy jam nut, available in steel or stainless steel.

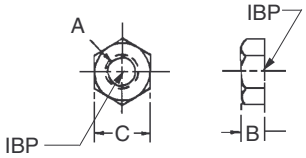

USA

STEEL PART NO.	STAINLESS STEEL PART NO.	A THREAD	B	C
—	CL-2-JN-S	#8-32	1/8	11/32
—	CL-3-JN-S	#10-24	1/8	3/8
CL-4-JN	CL-4-JN-S	1/4-20	11/64	1/2
CL-5-JN	CL-5-JN-S	5/16-18	13/64	9/16
CL-6-JN	CL-6-JN-S	3/8-16	15/64	11/16
CL-8-JN	—	1/2-13	19/64	7/8
CL-10-JN	—	5/8-11	23/64	1-1/16
CL-12-JN	—	3/4-10	27/64	1-1/4
CL-14-JN	—	7/8-9	31/64	1-7/16
CL-16-JN	—	1"-8	35/64	1-5/8

USA FINE

CL-3-FJN	CL-3-FJN-S	#10-32	1/8	3/8
CL-4-FJN	CL-4-FJN-S	1/4-28	5/32	7/16
CL-5-FJN	CL-5-FJN-S	5/16-24	3/16	1/2
CL-6-FJN	CL-6-FJN-S	3/8-24	7/32	9/16

METRIC

STEEL PART NO.	STAINLESS STEEL PART NO.	A THREAD	B	C
—	CLM-4-JN-S	M4	.08	7mm
—	CLM-5-JN-S	M5	.10	8mm
CLM-6-JN	CLM-6-JN-S	M6	.13	10mm
CLM-8-JN	CLM-8-JN-S	M8	.16	13mm
CLM-10-JN	CLM-10-JN-S	M10	.20	17mm
CLM-12-JN	CLM-12-JN-S	M12	.24	19mm
CLM-16-JN	CLM-16-JN-S	M16	.31	24mm
CLM-20-JN	CLM-20-JN-S	M20	.39	30mm
CLM-24-JN	—	M24	.47	36mm

Carr Lane®
MANUFACTURING CO.
4200 Carr Lane Ct., P.O. Box 191970
St. Louis, Missouri 63119-7970 USA
Phone: 314-647-6200, FAX: 314-647-5736
Web Site: www.carrlane.com

(Rev. 12-07)

FLANGE NUTS

STEEL: 12L14, CARBURIZED-HARDENED, BLACK OXIDE FINISH
STAINLESS STEEL: 300-SERIES, PASSIVATE FINISH

Flanged face provides a large bearing surface to avoid damaging the part underneath, especially when clamping over a slot. Precision machined from one solid piece of steel for extra strength.

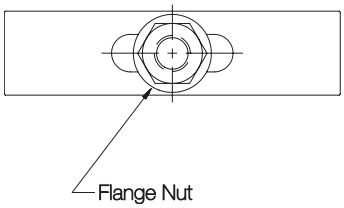

USA

STEEL PART NO.	STAINLESS STEEL PART NO.	A	B	C DIA	D	E
—	CL-123	#10-24	5/16	1/2	3/8	.08
—	CL-125	1/4-20	5/16	9/16	7/16	
CL-1-FN	—			5/8	1/2	.12
—	CL-126	5/16-18	3/8	11/16	9/16	.09
CL-9-FN	—			3/4		.12
CL-2-FN	CL-127	3/8-16	1/2	7/8	11/16	.12
CL-3-FN	CL-128	1/2-13	11/16	1-1/8	7/8	.20
CL-4-FN	CL-129	5/8-11	13/16	1-3/8	1-1/16	
CL-5-FN	—	3/4-10	1	1-5/8	1-1/4	.25
CL-6-FN	—	7/8-9	1-1/8	1-3/4	1-7/16	.32
CL-7-FN	—	1"-8	1-1/4	2	1-5/8	.28
CL-10-FN	—	1-1/4"-7	1-3/8	2-1/4	1-13/16	.25

USA FINE

—	CL-124	#10-32	5/16	1/2	3/8	.08
CL-1-FFN	—	1/4-28		5/8	1/2	.12
CL-9-FFN	—	5/16-24	3/8	3/4	9/16	
CL-2-FFN	—	3/8-24	1/2	7/8	11/16	
CL-3-FFN	—	1/2-20	11/16	1-1/8	7/8	.20
CL-4-FFN	—	5/8-18	13/16	1-3/8	1-1/16	
CL-5-FFN	—	3/4-16	1	1-5/8	1-1/4	.25
CL-7-FFN	—	1"-14	1-1/4	2	1-5/8	.25

METRIC

CLM-6-FN	—	M6	.31	.63	10mm	.12
CLM-8-FN	—	M8	.39	.75	13mm	
CLM-10-FN	—	M10	.51	.87	17mm	
CLM-12-FN	—	M12	.67	1.10	19mm	.20
CLM-16-FN	—	M16	.83	1.34	24mm	
CLM-20-FN	—	M20	.98	1.61	30mm	.24
CLM-24-FN	—	M24	1.26	2.01	36mm	.28

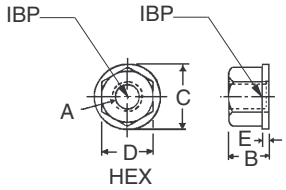

COUPLING NUTS

12L14 STEEL, CARBURIZED-HARDENED, BLACK OXIDE FINISH

For joining two or more studs together to create an extra-long stud.

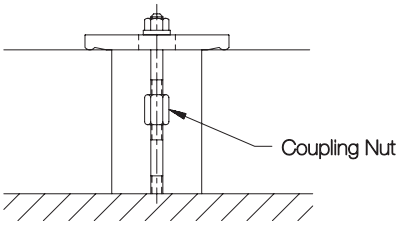

USA

PART NO.	A	B	C
CL-0-CN	1/4-20	1/2	5/8
CL-00-CN	5/16-18	9/16	7/8
CL-1-CN	3/8-16	11/16	1
CL-2-CN	1/2-13	7/8	1-1/4
CL-3-CN	5/8-11	1-1/16	1-5/8
CL-4-CN	3/4-10	1-1/4	1-7/8
CL-6-CN	1"-8	1-5/8	2-1/2

METRIC

CLM-6-CN	M6	10mm	.71
CLM-8-CN	M8	13mm	.79
CLM-10-CN	M10	17mm	.98
CLM-12-CN	M12	19mm	1.18
CLM-16-CN	M16	24mm	1.57
CLM-20-CN	M20	30mm	1.97

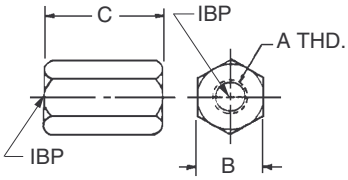

CarrLane MANUFACTURING CO.
4200 Carr Lane Ct., P.O. Box 191970
St. Louis, Missouri 63119-7970 USA
Phone: 314-647-6200, FAX: 314-647-5736
Web Site: www.carrlane.com

(Rev. 4-08)

SPHERICAL NUTS AND WASHERS

12L14 STEEL, CARBURIZED-HARDENED, BLACK OXIDE FINISH

NOW ALSO AVAILABLE IN STAINLESS STEEL!

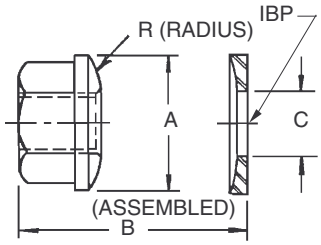

Combination nut and washer that compensates whenever a stud and clamp strap are not perpendicular. The nut has a convex spherical radius, while the washer has a matching concave spherical radius.

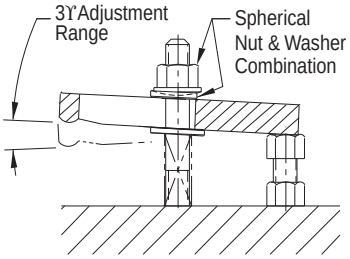

USA

STEEL PART NO.	STAINLESS STEEL PART NO.	THREAD	HEX	A DIA	B	C DIA	R
CL-1-SNW	CL-1-SNW-S	1/4-20	1/2	5/8	15/32	5/16	3/4
CL-9-SNW	CL-9-SNW-S	5/16-18	9/16	3/4	17/32	3/8	1
CL-2-SNW	CL-2-SNW-S	3/8-16	11/16	7/8	19/32	7/16	1-1/4
CL-3-SNW	CL-3-SNW-S	1/2-13	7/8	1-1/8	7/8	9/16	1-1/2
CL-4-SNW	CL-4-SNW-S	5/8-11	1-1/16	1-3/8	1	11/16	1-3/4
CL-5-SNW	CL-5-SNW-S	3/4-10	1-1/4	1-5/8	1-3/16	7/8	2-1/4
CL-6-SNW	—	7/8-9	1-7/16	1-3/4	1-5/16	1	2-1/2
CL-7-SNW	—	1"-8	1-5/8	2	1-7/16	1-1/8	2-3/4

METRIC

CLM-6-SNW	—	M6	10mm	5/8	.47	5/16	3/4
CLM-8-SNW	—	M8	13mm	3/4	.55	3/8	1
CLM-10-SNW	—	M10	17mm	7/8	.69	7/16	1-1/4
CLM-12-SNW	—	M12	19mm	1-1/8	.87	9/16	1-1/2
CLM-16-SNW	—	M16	24mm	1-3/8	.98	11/16	1-3/4
CLM-20-SNW	—	M20	30mm	1-5/8	1.18	7/8	2-1/4
CLM-24-SNW	—	M24	36mm	2	1.41	1	2-3/4

SPHERICAL WASHERS

STEEL: 12L14, CARBURIZED-HARDENED, BLACK OXIDE FINISH
STAINLESS STEEL: 300-SERIES

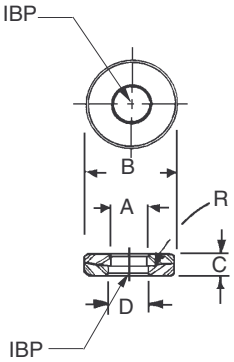

Two-piece washer that compensates whenever a stud and clamp strap are not perpendicular. The top washer has a convex spherical radius, while the bottom washer has a matching concave spherical radius.

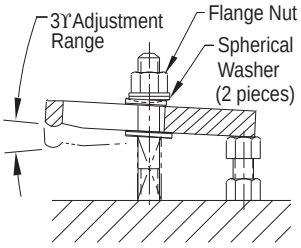

USA & METRIC

STEEL PART NO.	STAINLESS STEEL PART NO.	BOLT SIZE	A DIA	B DIA	C	D DIA	R
—	CL-144	#10 & M5	7/32	1/2	1/8	1/4	3/4
CL-1-SW	CL-145	1/4 & M6	9/32	5/8	3/16	5/16	
CL-11-SW	—	5/16 & M8	11/32	3/4	1/4	3/8	1
—	CL-146			13/16	7/32		
CL-2-SW	—	3/8 & M10	13/32	7/8	1/4	7/16	1-1/4
—	CL-147			1			
CL-3-SW	CL-148	1/2 & M12	17/32	1-1/8	5/16	9/16	1-1/2
CL-4-SW	CL-149	5/8 & M16	21/32	1-3/8		11/16	1-3/4
CL-5-SW	CL-150	3/4 & M18	25/32	1-5/8	3/8	7/8	2-1/4
CLM-20-SW	—	M20	.83			7/8	
CL-6-SW	—	7/8 & M22	15/16	1-3/4		1	2-1/2
CL-7-SW	—	1 & M24	1-1/16	2	1/2	1-1/8	2-3/4
CL-8-SW	—	1-1/8	1-3/16	2-1/4		1-1/4	3
CL-9-SW	—	1-1/4 & M30	1-5/16	2-5/8		1-3/8	
CL-10-SW	—	1-1/2 & M36	1-9/16	2-7/8		1-5/8	

Carr Lane®
MANUFACTURING CO.
4200 Carr Lane Ct., P.O. Box 191970
St. Louis, Missouri 63119-7970 USA
Phone: 314-647-6200, FAX: 314-647-5736
Web Site: www.carrlane.com

(Rev. 7-08)

FLAT WASHERS

STEEL: 1010, CARBURIZED-HARDENED, BLACK OXIDE FINISH
STAINLESS STEEL: 300-SERIES

Thick, heavy-duty washer with both faces held flat and parallel. Available in steel or stainless steel.

USA & METRIC

STEEL PART NO.	STAINLESS STEEL PART NO.	BOLT SIZE	A DIA	B DIA	C
—	CL-254	#10 or M5	7/16	7/32	5/64
—	CL-255	1/4 or M6	1/2	9/32	5/64
CL-7-FW	—		5/8		1/8
—	CL-256	5/16 or M8	5/8	11/32	3/32
CL-14-FW	—		3/4		1/8
—	CL-257	3/8 or M10	3/4	13/32	3/32
CL-1-FW	—		7/8		1/8
CL-8-FW	—		1		3/16
CL-2-FW	—	1/2 or M12	1-1/8	17/32	1/8
CL-9-FW	CL-258				3/16
CL-3-FW	—	5/8 or M16	1-3/8	21/32	1/8
CL-10-FW	CL-259				3/16
CL-4-FW	—	3/4 or M18	1-5/8	25/32	5/32
CL-11-FW	CL-260				1/4
CLM-10-FW	—	M20	1-5/8	.827	1/4
CL-13-FW	—	7/8 or M22	1-3/4	29/32	1/4
CL-12-FW	—	1	2	1-1/32	9/32

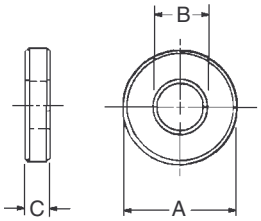

KNURLED-FACE WASHERS

4130 STEEL, HEAT TREATED 125,000-140,000 PSI PER MIL-H-6875, ZINC PLATED YELLOW CHROMATE

Serrated Washers
Teeth Facing Inward

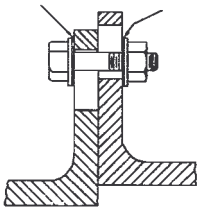

Flat washer with a serrated face to prevent two parts from sliding in relation to each other. Close tolerance on washer ID prevents the stud from slipping.

USA

PART NO.	BOLT DIA	A DIA
CL-3-KFW	#10	.1935
CL-4-KFW	1/4	.2500
CL-5-KFW	5/16	.3125
CL-6-KFW	3/8	.3750

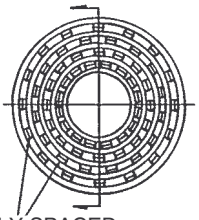

64 TEETH, 16 EQUALLY SPACED ON EACH DIAMETER WITH ALTERNATE ROWS STAGGERED

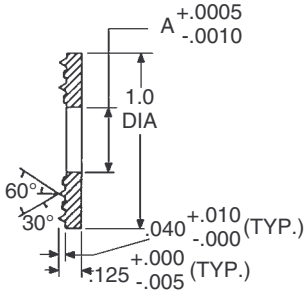

CarrLane®
MANUFACTURING CO.
4200 Carr Lane Ct., P.O. Box 191970
St. Louis, Missouri 63119-7970 USA
Phone: 314-647-6200, FAX: 314-647-5736
Web Site: www.carrlane.com

(Rev. 7-08)

C WASHERS

STEEL: 12L14, CARBURIZED-HARDENED, BLACK OXIDE FINISH
STAINLESS STEEL: 300-SERIES

Washer that slides in and out of position for clear loading. Can be used with a nut, or by sliding it into a radial groove on a drawbar. Available in steel or stainless steel.

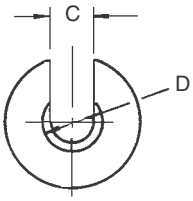

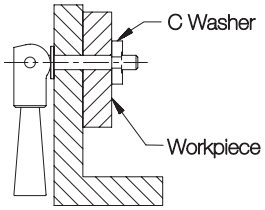

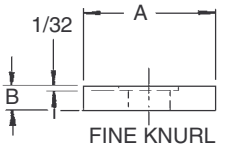

FINE KNURL ON STAINLESS WASHERS

USA & METRIC

STEEL PART NO.	STAINLESS STEEL PART NO.	BOLT SIZE	A DIA	B	C	D DIA
CL-1-CW	—	#10 or M5	1/2	3/16	13/64	11/32
CL-3-CW	—	1/4 or M6	3/4	1/4	17/64	13/32
—	CL-155		7/8	3/16	9/32	25/64
CL-18-CW	—		1	1/4	17/64	13/32
CL-5-CW	—	5/16 or M8	1	3/16	21/64	1/2
—	CL-157	3/8 or M10	1-1/4	5/16	13/32	5/8
CL-6-CW	—			3/8		23/32
CL-7-CW	—		1-1/2	3/8		23/32
CL-22-CW	—		1-3/4	1/4		
CL-8-CW	—	1/2 or M12	1-7/8	3/8	17/32	29/32
CL-24-CW	—		2-1/4			
CL-9-CW	—	5/8 or M16	2-1/8	3/8	21/32	1-3/32
CL-26-CW	—		2-1/2	7/16		
CL-11-CW	—	3/4 or M18	2-1/2	7/16	25/32	1-9/32
CL-12-CW	—	1 or M24	2-1/2	7/16	1-1/32	1-21/32
CL-15-CW	—		1/2	1/2	1-1/32	1-21/32

SWING C WASHERS

1018 STEEL, CARBURIZED-HARDENED, BLACK OXIDE FINISH

Permanently attached C washer that swings out of the way for clear loading. Can be reversed to swing into position either clockwise or counterclockwise. Shoulder Screw furnished.

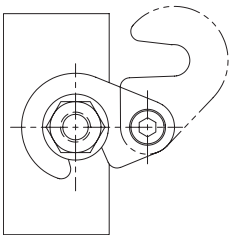

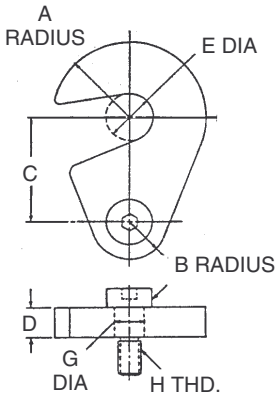

USA

PART NO.	STUD SIZE	A	B	C	D	E DIA	G DIA	H	SHOULDER SCREW (FURNISHED)
CL-1-SCW	3/8	3/4	3/8	1	1/4	13/32	3/8	5/16-18	CL-24-SS
CL-2-SCW	1/2	1	1/2	1-1/4	3/8	17/32			CL-2-SS
CL-3-SCW	5/8	1-1/8	9/16	1-1/2	3/8	21/32	1/2	3/8-16	CL-3-SS
CL-4-SCW	3/4	1-1/4	5/8	1-3/4	1/2	13/16			CL-4-SS

METRIC

CLM-1-SCW	M10	3/4	3/8	1	.236	13/32	10mm	M8	CLM-1006-SS
CLM-2-SCW	M12	1	1/2	1-1/4	.375	17/32			CLM-1010-SS
CLM-3-SCW	M16	1-1/8	9/16	1-1/2	.375	21/32	13mm	M10	CLM-1310-SS
CLM-4-SCW	M20	1-1/4	5/8	1-3/4	.472	13/16			CLM-1312-SS

Carr Lane MANUFACTURING CO.
4200 Carr Lane Ct., P.O. Box 191970
St. Louis, Missouri 63119-7970 USA
Phone: 314-647-6200, FAX: 314-647-5736
Web Site: www.carrlane.com

(Rev. 9-09)

SHOULDER SCREWS

ALLOY STEEL, HEAT TREATED RC 32-43, BLACK OXIDE FINISH

Precision close-tolerance Shoulder Screw. Shoulder diameter is ground to a closer tolerance than ordinary stripper bolts for better bearing action. Shoulder length is held to a plus tolerance to allow a nominal-size plate to rotate freely underneath the head.

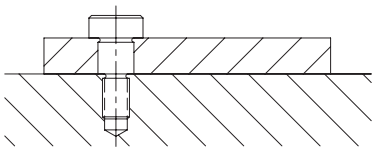

USA

PART NO.	SHOULDER DIA NOMINAL	SHOULDER DIA ACTUAL	A	B NOMINAL	B ACTUAL	D	E	F DIA	G
CL-5-SS	1/4	.2500	#10-24	1/4	.2500	3/16	3/8	3/8	1/8
CL-12-SS				3/8	.3750				
CL-13-SS				1/2	.500				
CL-37-SS				5/8	.6250				
CL-15-SS				3/4	.750				
CL-16-SS				1	1.0000				
CL-1-SS	5/16	.3125	1/4-20	1/4	.2500	7/32	7/16	7/16	5/32
CL-6-SS				5/16	.3125				
CL-11-SS				3/8	.3750				
CL-20-SS				1/2	.5000				
CL-21-SS				5/8	.6250				
CL-7-SS				3/4	.7500				
CL-8-SS				1	1.0000				
CL-24-SS	3/8	.3750	5-16-18	1/4	.2500	1/4	1/2	9/16	3/16
CL-2-SS				3/8	.3750				
CL-14-SS				1/2	.5000				
CL-9-SS				5/8	.6250				
CL-10-SS				3/4	.7500				
CL-47-SS				1	1.0000				
CL-3-SS	1/2	.5000	3/8-16	3/8	.3750	5/16	5/8	3/4	1/4
CL-4-SS				1/2	.5000				
CL-31-SS				5/8	.6250				
CL-32-SS				3/4	.7500				
CL-46-SS				1	1.0000				
CL-33-SS	5/8	.6250	1/2-13	1/2	.5000	3/8	3/4	7/8	5/16
CL-34-SS				5/8	.6250				
CL-35-SS				3/4	.7500				
CL-36-SS				1	1.0000				
CL-38-SS	3/4	7.500	5/8-11	1/2	.5000	1/2	7/8	1	3/8
CL-39-SS				3/4	.7500				
CL-40-SS				1	1.0000				

METRIC

CLM-806-SS	8mm	.3150	M6	6mm	.2362	.22	.44	.51	4mm
CLM-808-SS				8mm	.3150				
CLM-810-SS				10mm	.3937				
CLM-812-SS				12mm	.4724				
CLM-816-SS				16mm	.6299				
CLM-820-SS				20mm	.7874				
CLM-1006-SS	10mm	.3937	M8	6mm	.2362	.28	.52	.63	5mm
CLM-1008-SS				8mm	.3150				
CLM-1010-SS				10mm	.3937				
CLM-1012-SS				12mm	.4724				
CLM-1016-SS				16mm	.6299				
CLM-1020-SS				20mm	.7874				
CLM-1310-SS	13mm	.5118	M10	10mm	.3937	.35	.65	.71	6mm
CLM-1312-SS				12mm	.4724				
CLM-1316-SS				16mm	.6299				
CLM-1320-SS				20mm	.7874				
CLM-1610-SS	16mm	.6299	M12	10mm	.3937	.43	.72	.94	8mm
CLM-1612-SS				12mm	.4724				
CLM-1616-SS				16mm	.6299				
CLM-1620-SS				20mm	.7874				
CLM-2016-SS	20mm	.7874	M16	16mm	.6299	.55	.88	1.18	10mm
CLM-2020-SS				20mm	.7874				
CLM-2025-SS				25mm	.9843				

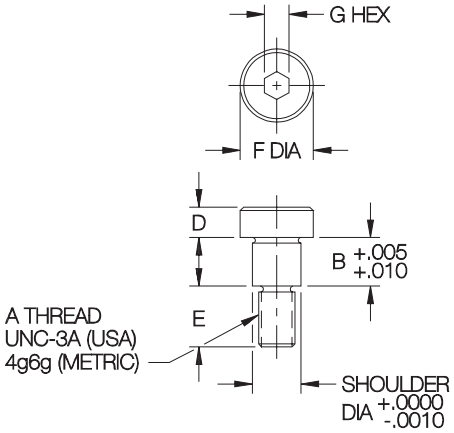

Carr Lane MANUFACTURING CO.
4200 Carr Lane Ct., P.O. Box 191970
St. Louis, Missouri 63119-7970 USA
Phone: 314-647-6200, FAX: 314-647-5736
Web Site: www.carrlane.com

(Rev. 12-07)

CLAMPING STUDS

STEEL: 1144 STEEL, 100,000 PSI MIN. YIELD, 115,000 PSI MIN. TENSILE, BLACK OXIDE FINISH
STAINLESS STEEL: 300 SERIES

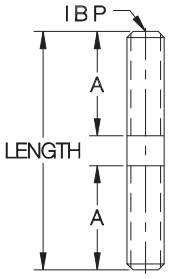

High-strength general-purpose clamping stud, for use with a T-Nut, or for installation directly into a fixture plate. Available in thread sizes from 1/4-20 to 1"-8 (M6 to M20 in metric), each in a choice of several lengths. Now also available in stainless steel, in 3/8-16, 1/2-13, and 5/8-11 thread sizes (for smaller stainless sizes, see Fixture Studs, page 169).

STEEL (USA)

PART NO.	THREAD SIZE	LENGTH	A
CL-1/4-20X1.50-STUD	1/4-20	1.50	5/8
CL-1/4-20X2.00-STUD		2.00	7/8
CL-1/4-20X2.50-STUD		2.50	1
CL-1/4-20X3.00-STUD		3.00	
CL-1/4-20X3.50-STUD		3.50	
CL-1/4-20X4.00-STUD		4.00	
CL-5/16-18X1.50-STUD	5/16-18	1.50	9/16
CL-5/16-18X2.00-STUD		2.00	13/16
CL-5/16-18X2.50-STUD		2.50	1-1/16
CL-5/16-18X3.00-STUD		3.00	1-1/8
CL-5/16-18X3.50-STUD		3.50	
CL-5/16-18X4.00-STUD		4.00	
CL-5/16-18X5.00-STUD		5.00	
CL-5/16-18X6.00-STUD		6.00	
CL-3/8-16X1.50-STUD	3/8-16	1.50	9/16
CL-3/8-16X2.00-STUD		2.00	13/16
CL-3/8-16X2.50-STUD		2.50	1-1/16
CL-3/8-16X3.00-STUD		3.00	1-1/4
CL-3/8-16X3.50-STUD		3.50	
CL-3/8-16X4.00-STUD		4.00	
CL-3/8-16X4.50-STUD		4.50	
CL-3/8-16X5.00-STUD		5.00	
CL-3/8-16X5.50-STUD		5.50	
CL-3/8-16X6.00-STUD		6.00	
CL-3/8-16X6.50-STUD		6.50	
CL-3/8-16X7.00-STUD		7.00	
CL-3/8-16X7.50-STUD		7.50	
CL-3/8-16X8.00-STUD		8.00	
CL-1/2-13X2.00-STUD	1/2-13	2.00	3/4
CL-1/2-13X2.50-STUD		2.50	1
CL-1/2-13X3.00-STUD		3.00	1-1/4
CL-1/2-13X3.50-STUD		3.50	1-1/2
CL-1/2-13X4.00-STUD		4.00	
CL-1/2-13X4.50-STUD		4.50	
CL-1/2-13X5.00-STUD		5.00	
CL-1/2-13X5.50-STUD		5.50	
CL-1/2-13X6.00-STUD		6.00	
CL-1/2-13X6.50-STUD		6.50	
CL-1/2-13X7.00-STUD		7.00	
CL-1/2-13X7.50-STUD		7.50	
CL-1/2-13X8.00-STUD		8.00	
CL-1/2-13X9.00-STUD		9.00	2
CL-1/2-13X10.00-STUD		10.00	
CL-1/2-13X12.00-STUD		12.00	

STEEL (USA) (Cont.)

PART NO.	THREAD SIZE	LENGTH	A
CL-5/8-11X2.50-STUD	5/8-11	2.50	15/16
CL-5/8-11X3.00-STUD		3.00	1-3/16
CL-5/8-11X3.50-STUD		3.50	1-7/16
CL-5/8-11X4.00-STUD		4.00	1-11/16
CL-5/8-11X4.50-STUD		4.50	1-3/4
CL-5/8-11X5.00-STUD		5.00	
CL-5/8-11X5.50-STUD		5.50	
CL-5/8-11X6.00-STUD		6.00	
CL-5/8-11X6.50-STUD		6.50	
CL-5/8-11X7.00-STUD		7.00	
CL-5/8-11X7.50-STUD		7.50	
CL-5/8-11X8.00-STUD		8.00	
CL-5/8-11X9.00-STUD		9.00	2
CL-5/8-11X10.00-STUD		10.00	
CL-5/8-11X12.00-STUD		12.00	
CL-5/8-11X14.00-STUD		14.00	
CL-3/4-10X3.00-STUD	3/4-10	3.00	1-1/8
CL-3/4-10X3.50-STUD		3.50	1-3/8
CL-3/4-10X4.00-STUD		4.00	1-5/8
CL-3/4-10X5.00-STUD		5.00	2
CL-3/4-10X6.00-STUD		6.00	
CL-3/4-10X7.00-STUD		7.00	
CL-3/4-10X8.00-STUD		8.00	
CL-3/4-10X9.00-STUD		9.00	
CL-3/4-10X10.00-STUD		10.00	
CL-3/4-10X12.00-STUD		12.00	
CL-3/4-10X14.00-STUD		14.00	
CL-3/4-10X16.00-STUD		16.00	
CL-7/8-9X4.00-STUD	7/8-9	4.00	1-9/16
CL-7/8-9X5.00-STUD		5.00	2-1/16
CL-7/8-9X6.00-STUD		6.00	2-1/4
CL-7/8-9X8.00-STUD		8.00	
CL-7/8-9X10.00-STUD		10.00	
CL-7/8-9X12.00-STUD		12.00	
CL-1-8X4.00-STUD	1"-8	4.00	1-1/2
CL-1-8X5.00-STUD		5.00	2
CL-1-8X6.00-STUD		6.00	2-1/2
CL-1-8X8.00-STUD		8.00	
CL-1-8X10.00-STUD		10.00	
CL-1-8X12.00-STUD		12.00	

STAINLESS STEEL (USA)

PART NO.	THREAD SIZE	LENGTH	A
CL-3/8-16X2.00-STUD-S	3/8-16	2.00	13/16
CL-3/8-16X2.50-STUD-S		2.50	1-1/16
CL-3/8-16X3.00-STUD-S		3.00	1-1/4
CL-3/8-16X3.50-STUD-S		3.50	
CL-3/8-16X4.00-STUD-S		4.00	
CL-3/8-16X4.50-STUD-S		4.50	
CL-3/8-16X5.00-STUD-S		5.00	
CL-3/8-16X6.00-STUD-S		6.00	

STAINLESS STEEL (USA) (Cont.)

PART NO.	THREAD SIZE	LENGTH	A
CL-1/2-13X2.00-STUD-S	1/2-13	2.00	3/4
CL-1/2-13X2.50-STUD-S		2.50	1
CL-1/2-13X3.00-STUD-S		3.00	1-1/4
CL-1/2-13X3.50-STUD-S		3.50	1-1/2
CL-1/2-13X4.00-STUD-S		4.00	
CL-1/2-13X4.50-STUD-S		4.50	
CL-1/2-13X5.00-STUD-S		5.00	
CL-1/2-13X5.50-STUD-S		5.50	
CL-1/2-13X6.00-STUD-S		6.00	
CL-5/8-11X2.50-STUD-S	5/8-11	2.50	15/16
CL-5/8-11X3.00-STUD-S		3.00	1-3/16
CL-5/8-11X3.50-STUD-S		3.50	1-7/16
CL-5/8-11X4.00-STUD-S		4.00	1-11/16
CL-5/8-11X4.50-STUD-S		4.50	1-3/4
CL-5/8-11X5.00-STUD-S		5.00	
CL-5/8-11X5.50-STUD-S		5.50	
CL-5/8-11X6.00-STUD-S		6.00	

STEEL (METRIC)

CLM-6X-35-STUD	M6	1.38 (35mm)	.59
CLM-6X-50-STUD		1.97 (50mm)	.87
CLM-6X-65-STUD		2.56 (65mm)	1.06
CLM-6X-80-STUD		3.15 (80mm)	
CLM-6X-95-STUD		3.75 (95mm)	
CLM-6X-110-STUD		4.33 (110mm)	
CLM-8X-50-STUD	M8	1.97 (50mm)	.83
CLM-8X-65-STUD		2.56 (65mm)	1.14
CLM-8X-80-STUD		3.15 (80mm)	1.22
CLM-8X-95-STUD		3.74 (95mm)	
CLM-8X-110-STUD		4.33 (110mm)	
CLM-10X-50-STUD	M10	1.97 (50mm)	.79
CLM-10X-65-STUD		2.56 (65mm)	1.08
CLM-10X-80-STUD		3.15 (80mm)	1.38
CLM-10X-95-STUD		3.74 (95mm)	
CLM-10X-110-STUD		4.33 (110mm)	
CLM-10X-125-STUD		4.92 (125mm)	
CLM-10X-150-STUD		5.91 (150mm)	
CLM-10X-175-STUD		6.89 (175mm)	
CLM-10X-200-STUD		7.87 (200mm)	
CLM-12X-65-STUD	M12	2.56 (65mm)	1.04
CLM-12X-80-STUD		3.15 (80mm)	1.34
CLM-12X-95-STUD		3.74 (95mm)	1.54
CLM-12X-110-STUD		4.33 (110mm)	
CLM-12X-125-STUD		4.92 (125mm)	
CLM-12X-150-STUD		5.91 (150mm)	
CLM-12X-175-STUD		6.89 (175mm)	
CLM-12X-200-STUD		7.87 (200mm)	
CLM-12X-250-STUD		9.84 (250mm)	
CLM-12X-300-STUD		11.81 (300mm)	
CLM-16X-80-STUD	M16	3.15 (80mm)	1.26
CLM-16X-95-STUD		3.74 (95mm)	1.56
CLM-16X-110-STUD		4.33 (110mm)	1.85
CLM-16X-125-STUD		4.92 (125mm)	
CLM-16X-150-STUD		5.91 (150mm)	
CLM-16X-175-STUD		6.89 (175mm)	
CLM-16X-200-STUD		7.87 (200mm)	
CLM-16X-250-STUD		9.84 (250mm)	
CLM-20X-80-STUD	M20	3.15 (80mm)	1.18
CLM-20X-95-STUD		3.74 (95mm)	1.48
CLM-20X-110-STUD		4.33 (110mm)	1.77
CLM-20X-125-STUD		4.92 (125mm)	2.07
CLM-20X-150-STUD		5.91 (150mm)	2.17
CLM-20X-175-STUD		6.89 (175mm)	
CLM-20X-200-STUD		7.87 (200mm)	

Carr Lane MANUFACTURING CO.
4200 Carr Lane Ct., P.O. Box 191970
St. Louis, Missouri 63119-7970 USA
Phone: 314-647-6200, FAX: 314-647-5736
Web Site: www.carrlane.com

(Rev. 7-08)

FIXTURE STUDS

300-SERIES STAINLESS STEEL, PASSIVATED

Stainless Steel

Fixture studs have a thread-locking interference thread at the bottom end to install permanently in a fixture plate. These studs are available in small sizes from #10-24 to 3/8-16, each in a choice of several lengths.

STAINLESS STEEL (USA)

PART NO.	A	B	C	D
CL-11310	#10-24	1	1/2	7/32
CL-11315		1-1/2	3/4	
CL-11320		2	3/4	
CL-11410	#10-32	1	1/2	7/32
CL-11415		1-1/2	3/4	
CL-11420		2	3/4	
CL-11515	1/4-20	1-1/2	5/8	9/32
CL-11520		2	3/4	
CL-11525		2-1/2	3/4	
CL-11530		3	1	
CL-11615	5/16-18	1-1/2	5/8	11/32
CL-11620		2	1	
CL-11625		2-1/2	1-1/4	
CL-11715	3/8-16	1-1/2	3/4	11/32
CL-11725		2-1/2	1-1/4	
CL-11730		3	1-3/8	
CL-11740		4	1-1/2	

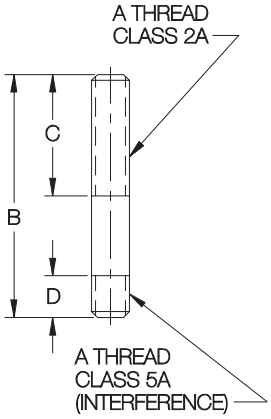

The older I get, the more wisdom I find in the ancient rule of taking first things first — a process which often reduces the most complex human problems to manageable proportions.

— Dwight D. Eisenhower

Carr Lane®
MANUFACTURING CO.
4200 Carr Lane Ct., P.O. Box 191970
St. Louis, Missouri 63119-7970 USA
Phone: 314-647-6200, FAX: 314-647-5736
Web Site: www.carrlane.com

(Rev. 07-10)

T NUTS

STEEL: MILD STEEL, CARBURIZED-HARDENED, BLACK OXIDE FINISH
STAINLESS: 300-SERIES STAINLESS STEEL, PASSIVATED

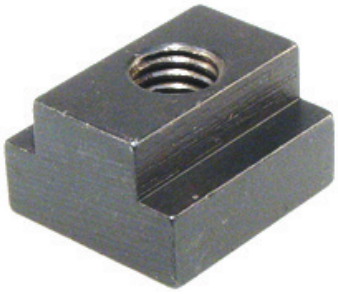

SMALLER SIZES NOW AVAILABLE!

Sizes for all standard machine tables. Safety-stop feature prevents breaking the machine-table slot. Threads stop one short of going through T nut to prevent a stud from jacking the nut out of the table.

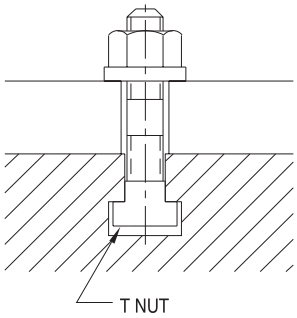

STEEL (USA)

PART NO.	TABLE SLOT SIZE	A	B	C	D	E	F
CL-26-TN	5/16 or 8mm	1/4-20	.307	9/16	9/16	1/4	3/16
CL-18-TN	3/8 or 10mm	1/4-20	.370	5/8	7/8	7/16	7/32
CL-19-TN		5/16-18					
CL-20-TN	7/16	5/16-18	.432	11/16	7/8	1/2	
CL-00-TN		3/8-16					
CL-12-TN	12mm	3/8-16	.467	3/4	3/4	1/2	17/64
CL-21-TN	1/2	5/16-18	.495	7/8	7/8	1/2	9/32
CL-0-TN		3/8-16					
CL-1-TN	9/16 or 14mm	3/8-16	.550		7/8	1/2	5/16
CL-9-TN		1/2-13			1-1/8	5/8	11/32
CL-16-TN	5/8 or 16mm	3/8-16	.620	1	1-1/8	5/8	11/32
CL-2-TN		1/2-13					
CL-3-TN	11/16 or 18mm	1/2-13	.682	1-1/8	1-1/4	3/4	7/16
CL-10-TN		5/8-11	.682		1-1/4	3/4	7/16
CL-10A-TN			.675		1-1/2	1-1/8	15/32
CL-17-TN	3/4	1/2-13	.745	1-1/4	1-1/4	3/4	15/32
CL-4-TN		5/8-11					
CL-14-TN	20mm	5/8-11	.782			7/8	
CL-5-TN	13/16	5/8-11	.807	1-1/4	1-1/2	1	9/16
CL-11-TN		3/4-10					
CL-15-TN	22mm	3/4-10	.861	1-1/4	1-1/2	1	1/2
CL-6-TN	7/8	3/4-10	.870	1-1/2			9/16
CL-7-TN	1	3/4-10	.995	1-5/8	1-3/4	1	5/8
CL-22-TN		7/8-9					
CL-8-TN	1-1/16	3/4-10	1.057		2	1-1/8	11/16
CL-23-TN		7/8-9					
CL-24-TN	1-1/8	7/8-9	1.120	1-3/4	2	1-1/2	3/4
CL-25-TN		1”-8					

STAINLESS STEEL (USA)

PART NO.	TABLE SLOT SIZE	A	B	C	D	E	F
CL-00-STN	7/16	3/8-16	.432	11/16	7/8	1/2	7/32
CL-0-STN	1/2		.495	7/8	7/8	1/2	9/32
CL-1-STN	9/16 or 14mm	3/8-16	.550	7/8	7/8	1/2	5/16
CL-9-STN		1/2-13			1-1/8	5/8	11/32
CL-2-STN	5/8 or 16mm	1/2-13	.620	1	1-1/8	5/8	11/32
CL-3-STN	11/16 or 18mm	1/2-13	.682	1-1/8	1-1/4	3/4	7/16
CL-10-STN		5/8-11					

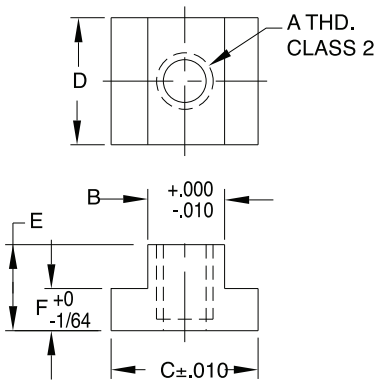

STEEL (METRIC)

PART NO.	TABLE SLOT SIZE	A	B	C	D	E	F
CLM-26-TN	5/16 or 8mm	M6	.307	9/16	9/16	1/4	3/16
CLM-18-TN	3/8 or 10mm	M6	.370	5/8	7/8	7/16	7/32
CLM-19-TN		M8					
CLM-00-TN	12mm	M10	.467	3/4	3/4	1/2	17/64
CLM-0-TN	1/2		.495	7/8	7/8	1/2	9/32
CLM-1-TN	9/16 or 14mm	M10	.546	7/8	7/8	5/8	5/16
CLM-9-TN		M12					
CLM-2-TN	5/8 or 16mm	M12	.620	1	1-1/8	5/8	11/32
CLM-3-TN	11/16 or 18mm	M12	.682	1-1/8	1-1/4	3/4	7/16
CLM-10-TN		M16					
CLM-4-TN	20mm	M16	.782	1-1/4	1-1/4	7/8	15/32
CLM-5-TN	13/16		.807		1-1/2	1	9/16
CLM-6-TN	22mm	M20	.861	1-1/4	1-1/2	1	1/2

Carr Lane MANUFACTURING CO.
4200 Carr Lane Ct., P.O. Box 191970
St. Louis, Missouri 63119-7970 USA
Phone: 314-647-6200, FAX: 314-647-5736
Web Site: www.carrlane.com

(Rev. 12-07)

T NUT & STUD SETS

SEE PAGES 216, 221, AND 223 FOR MATERIAL SPECIFICATIONS

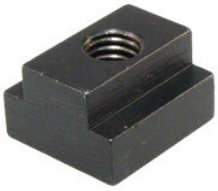

38-piece set includes a complete range of stud lengths with matching T nuts, flange nuts, and coupling nuts — all mounted in a handy wooden holder.

Set includes:
- (4) Studs of each length 3", 4", 5", 6", 7", 8", or 80, 95, 125, 150, 175, 200mm
- (6) T Nuts
- (6) Flange Nuts
- (4) Coupling Nuts
- (1) Handy Holder

USA

PART NO.	TABLE SLOT SIZE	STUDS (24)	T NUTS (6)	FLANGE NUTS (6)	COUPLING NUTS (4)	HOLDER (1)
CL-1-TNS	7/16	3/8-16	CL-00-TN	CL-2-FN	CL-1-CN	CL-1-TNH
CL-14-TNS	12mm		CL-12-TN			
CL-2-TNS	1/2		CL-0-TN			
CL-3-TNS	9/16 or 14mm	3/8-16	CL-1-TN	CL-2-FN	CL-1-CN	CL-1-TNH
CL-4-TNS		1/2-13	CL-9-TN	CL-3-FN	CL-2-CN	CL-2-TNH
CL-17-TNS	5/8 or 16mm	3/8-16	CL-16-TN	CL-2-FN	CL-1-CN	CL-1-TNH
CL-5-TNS		1/2-13	CL-2-TN	CL-3-FN	CL-2-CN	CL-2-TNH
CL-6-TNS	11/16 or 18mm	1/2-13	CL-3-TN	CL-3-FN	CL-2-CN	CL-2-TNH
CL-7-TNS		5/8-11	CL-10-TN	CL-4-FN	CL-3-CN	CL-3-TNH
CL-18-TNS	3/4	1/2-13	CL-17-TN	CL-3-FN	CL-2-CN	CL-2-TNH
CL-8-TNS		5/8-11	CL-4-TN	CL-4-FN	CL-3-CN	CL-3-TNH
CL-15-TNS	20mm		CL-14-TN			
CL-9-TNS	13/16	5/8-11	CL-5-TN	CL-4-FN	CL-3-CN	CL-3-TNH
CL-10-TNS		3/4-10	CL-11-TN	CL-5-FN	CL-4-CN	CL-4-TNH
CL-16-TNS	22mm	3/4-10	CL-15-TN	CL-5-FN	CL-4-CN	CL-4-TNH
CL-11-TNS	7/8		CL-6-TN			
CL-12-TNS	1		CL-7-TN			
CL-13-TNS	1-1/16		CL-8-TN			

METRIC

CLM-1-TNS	12mm	M10	CLM-00-TN	CLM-10-FN	CLM-10-CN	CL-1-TNH
CLM-2-TNS	1/2		CLM-0-TN			
CLM-3-TNS	9/16 or 14mm	M10	CLM-1-TN	CLM-10-FN	CLM-10-CN	CL-1-TNH
CLM-4-TNS		M12	CLM-9-TN	CLM-12-FN	CLM-12-CN	CL-2-TNH
CLM-5-TNS	5/8 or 16mm	M12	CLM-2-TN	CLM-12-FN	CLM-12-CN	CL-2-TNH
CLM-6-TNS	11/16 or 18mm	M12	CLM-3-TN	CLM-12-FN	CLM-12-CN	CL-2-TNH
CLM-7-TNS		M16	CLM-10-TN	CLM-16-FN	CLM-16-CN	CL-3-TNH
CLM-8-TNS	20mm	M16	CLM-4-TN	CLM-16-FN	CLM-16-CN	CL-3-TNH
CLM-9-TNS	13/16		CLM-5-TN			
CLM-11-TNS	22mm	M20	CLM-6-TN	CLM-20-FN	CLM-20-CN	CL-4-TNH

T-SLOT CLEANERS

MILD STEEL, CARBURIZED-HARDENED, BLACK OXIDE FINISH

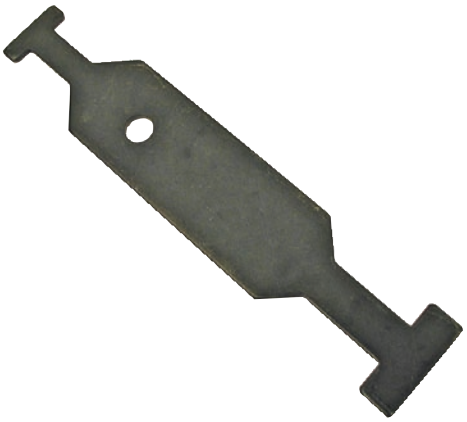

This handy tool is ideal for cleaning chips and debris out of machine-table T slots. Much safer than blowing chips out with air. Made of heat treated steel, a full .109" thick. Use for any T slot 3/8" (10mm) and above. One end is sized for smaller T slots, while the other end is sized for larger T slots.

PART NO.	OVERALL LENGTH	THICKNESS
CL-1-TSCL	6	.109

CarrLane®
MANUFACTURING CO.
4200 Carr Lane Ct., P.O. Box 191970
St. Louis, Missouri 63119-7970 USA
Phone: 314-647-6200, FAX: 314-647-5736
Web Site: www.carrlane.com

(Rev. 6-08)

ROTARY T NUTS

ALLOY STEEL, RC 40-45, BLACK OXIDE FINISH

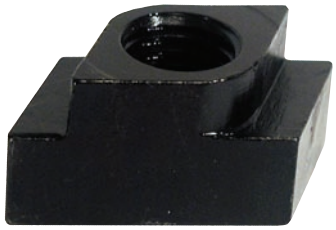

NOW ALSO AVAILABLE IN METRIC!

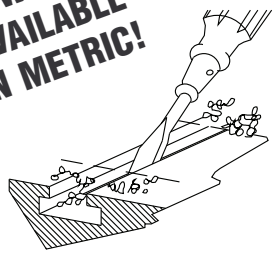

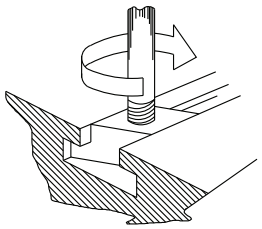

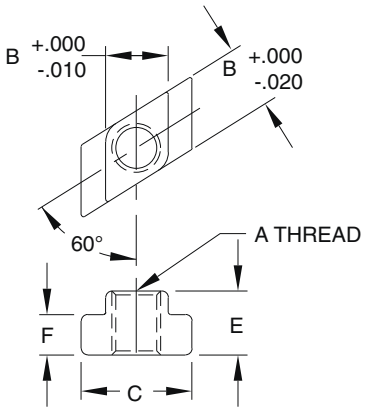

Rotary T Nuts can be inserted into the top of a T slot, unlike normal T Nuts, which must be inserted at the end of the slot. This allows adding T Nuts and Studs anywhere for a new setup, without tearing down any existing setups. Make sure that the area where the Rotary T Nut will be inserted is clear of debris, to allow the T nut to rotate a full 60 degrees. Same safety-stop thread feature as standard T Nuts.

USA

PART NO.	TABLE SLOT SIZE	A	B	C	E	F
CL-0-RTN	1/2	3/8-16	.495	7/8	1/2	9/32
CL-9-RTN	9/16 or 14mm	1/2-13	.550	7/8	5/8	11/32
CL-2-RTN	5/8 or 16mm	1/2-13	.620	1	5/8	11/32
CL-3-RTN	11/16 or 18mm	1/2-13	.682	1-1/8	3/4	7/16
CL-10-RTN		5/8-11				
CL-4-RTN	3/4 or 20mm	5/8-11	.745	1-1/4	3/4	15/32
CL-7-RTN	1	3/4-10	.995	1-5/8	1	5/8

METRIC

CLM-0-RTN	1/2	M10	.495	7/8	1/2	9/32
CLM-9-RTN	9/16 or 14mm	M12	.550	7/8	5/8	11/32
CLM-2-RTN	5/8 or 16mm	M12	.620	1	5/8	11/32
CLM-3-RTN	11/16 or 18mm	M12	.682	1-1/8	3/4	7/16
CLM-10-RTN		M16				
CLM-4-RTN	3/4 or 20mm	M16	.745	1-1/4	3/4	15/32

ROTARY T NUT AND STUD SETS

SEE PAGES 178, 189, AND 193 FOR MATERIAL SPECIFICATIONS

NOW ALSO AVAILABLE IN METRIC!

38-piece set includes a complete range of stud lengths with matching T nuts, flange nuts, and coupling nuts — all mounted in a handy wooden holder. Set includes:

- (4) Studs of each length 3", 4", 5", 6", 7" and 8" (80, 95, 125, 150, 175, and 200mm in metric)
- (6) Rotary T Nuts
- (6) Flange Nuts
- (4) Coupling Nuts

USA

PART NO.	TABLE SLOT SIZE	STUDS (24)	ROTARY T NUTS (6)	FLANGE NUTS (6)	COUPLING NUTS (4)	HOLDER (1)
CL-2-RTNS	1/2	3/8-16	CL-0-RTN	CL-2-FN	CL-1-CN	CL-1-TNH
CL-4-RTNS	9/16 or 14mm	1/2-13	CL-9-RTN	CL-3-FN	CL-2-CN	CL-2-TNH
CL-5-RTNS	5/8 or 16mm	1/2-13	CL-2-RTN	CL-3-FN	CL-2-CN	CL-2-TNH
CL-6-RTNS	11/16 or 18mm	1/2-13	CL-3-RTN	CL-3-FN	CL-2-CN	CL-2-TNH
CL-7-RTNS		5/8-11	CL-10-RTN	CL-4-FN	CL-3-CN	CL-3-TNH
CL-8-RTNS	3/4 or 20mm	5/8-11	CL-4-RTN	CL-4-FN	CL-3-CN	CL-3-TNH
CL-12-RTNS	1	3/4-10	CL-7-RTN	CL-5-FN	CL-4-CN	CL-4-TNH

METRIC

CLM-2-RTNS	1/2	M10	CLM-0-RTN	CLM-10-FN	CLM-10-CN	CL-1-TNH
CLM-4-RTNS	9/16 or 14mm	M12	CLM-9-RTN	CLM-12-FN	CLM-12-CN	CL-2-TNH
CLM-5-RTNS	5/8 or 16mm	M12	CLM-2-RTN	CLM-12-FN	CLM-12-CN	CL-2-TNH
CLM-6-RTNS	11/16 or 18mm	M12	CLM-3-RTN	CLM-12-FN	CLM-12-CN	CL-2-TNH
CLM-7-RTNS		M16	CLM-10-RTN	CLM-16-FN	CLM-16-CN	CL-3-TNH
CLM-8-RTNS	3/4 or 20mm	M16	CLM-4-RTN	CLM-16-FN	CLM-16-CN	CL-3-TNH

Carr Lane®
MANUFACTURING CO.
4200 Carr Lane Ct., P.O. Box 191970
St. Louis, Missouri 63119-7970 USA
Phone: 314-647-6200, FAX: 314-647-5736
Web Site: www.carrlane.com

(Rev. 7-08)

T BOLTS

STEEL: 4140/5140, HEAT TREATED, 125,000 PSI MIN. TENSILE STRENGTH, BLACK OXIDE FINISH
STAINLESS STEEL: 302 STAINLESS

ADDITIONAL SIZES AND STAINLESS STEEL NOW AVAILABLE!

High-strength alloy steel clamping bolts for use in T slots. Available in larger thread sizes from 1/2-13 to 1"-8 (M10 to M20 in metric), each in a choice of several lengths, in steel or stainless steel.

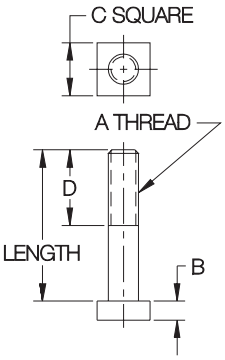

USA

PART NO. STEEL	PART NO. STAINLESS	A	B	C	D	LENGTH
CL-0-TB-1.50	CL-0-TB-1.50-S	3/8-16	1/4	11/16	1-1/4	1.50
CL-0-TB-2.00	CL-0-TB-2.00-S				1-3/4	2.00
CL-0-TB-2.50	CL-0-TB-2.50-S				2	2.50
CL-0-TB-3.00	CL-0-TB-3.00-S					3.00
CL-0-TB-3.50	—					3.50
CL-0-TB-4.00	—					4.00
CL-0-TB-5.00	—					5.00
CL-0-TB-6.00	—					6.00
CL-1-TB-1.50	CL-1-TB-1.50-S	1/2-13	5/16	7/8	1-1/4	1.50
CL-1-TB-2.00	CL-1-TB-2.00-S				1-3/4	2.00
CL-1-TB-2.50	CL-1-TB-2.50-S				2	2.50
CL-1-TB-3.00	CL-1-TB-3.00-S					3.00
CL-1-TB-3.50	CL-1-TB-3.50-S					3.50
CL-1-TB-4.00	CL-1-TB-4.00-S					4.00
CL-1-TB-5.00	CL-1-TB-5.00-S					5.00
CL-1-TB-6.00	CL-1-TB-6.00-S				2-1/2	6.00
CL-1-TB-8.00	CL-1-TB-8.00-S					8.00
CL-2-TB-1.50	—	5/8-11	13/32	1-1/8	1-1/4	1.50
CL-2-TB-2.00	—				1-3/4	2.00
CL-2-TB-2.50	—				2	2.50
CL-2-TB-3.00	—					3.00
CL-2-TB-3.50	—					3.50
CL-2-TB-4.00	CL-2-TB-4.00-S					4.00
CL-2-TB-5.00	CL-2-TB-5.00-S					5.00
CL-2-TB-6.00	CL-2-TB-6.00-S				2-1/2	6.00
CL-2-TB-8.00	CL-2-TB-8.00-S					8.00
CL-3-TB-2.00	—	3/4-10	17/32	1-5/16	1-3/4	2.00
CL-3-TB-3.00	—				2	3.00
CL-3-TB-4.00	—					4.00
CL-3-TB-5.00	CL-3-TB-5.00-S					5.00
CL-3-TB-6.00	CL-3-TB-6.00-S				2-1/2	6.00
CL-3-TB-7.00	—					7.00
CL-3-TB-8.00	CL-3-TB-8.00-S					8.00
CL-4-TB-4.00	—	7/8-9	5/8	1-1/2	3	4.00
CL-4-TB-6.00	—				3-1/2	6.00
CL-4-TB-8.00	—				4	7.00
CL-5-TB-4.00	—	1”-8	11/16	1-11/16	3	4.00
CL-5-TB-5.00	—				4	5.00
CL-5-TB-6.00	—					6.00
CL-5-TB-7.00	—					7.00
CL-5-TB-8.00	—					8.00

METRIC

CLM-10-TB-40	—	M10	.25	.69	1.18	1.57 (40mm)
CLM-10-TB-50	—				1.77	1.97 (50mm)
CLM-10-TB-75	—				1.97	2.95 (75mm)
CLM-10-TB-100	—					3.94 (100mm)
CLM-12-TB-50	—	M12	.31	.87	1.77	1.97 (50mm)
CLM-12-TB-65	—				1.97	2.56 (65mm)
CLM-12-TB-75	—					2.95 (75mm)
CLM-12-TB-90	—					3.54 (90mm)
CLM-12-TB-100	—					3.94 (100mm)
CLM-12-TB-125	—					4.92 (125mm)
CLM-16-TB-50	—	M16	.39	1.10	1.77	1.97 (50mm)
CLM-16-TB-75	—				1.97	2.95 (75mm)
CLM-16-TB-100	—					3.94 (100mm)
CLM-16-TB-150	—				2.56	5.91 (150mm)
CLM-20-TB-50	—	M20	.53	1.30	1.77	1.97 (50mm)
CLM-20-TB-75	—				1.97	2.95 (75mm)
CLM-20-TB-100	—					3.94 (100mm)

Carr Lane®
MANUFACTURING CO.
4200 Carr Lane Ct., P.O. Box 191970
St. Louis, Missouri 63119-7970 USA
Phone: 314-647-6200, FAX: 314-647-5736
Web Site: www.carrlane.com

(Rev. 11-09)

T-SLOT BOLTS

FORGED 1045 STEEL, BLACK OXIDE FINISH

T-Slot Bolt

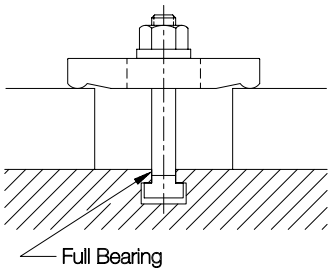

High-strength bolt for T-slotted machine tables. Full bearing surfaces prevent twisting or jamming in table slots. Available in thread sizes from 3/8-16 to 3/4-10, each in a choice of several lengths.

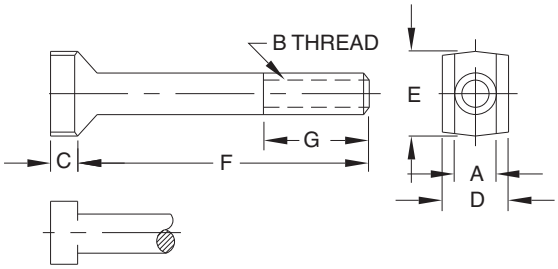

T-SLOT BOLTS (USA)

PART NO.	B THREAD	A	FITS TABLE SLOTS	C	D	E	F LENGTH	G
CL-6-TSB-1.00	3/8-16	3/8	3/8 7/16 1/2 10mm 12mm	3/16	5/8	13/16	1.00	.62
CL-6-TSB-1.50							1.50	1.00
CL-6-TSB-2.00							2.00	1.25
CL-6-TSB-2.50							2.50	1.50
CL-6-TSB-3.00							3.00	
CL-6-TSB-3.50							3.50	
CL-6-TSB-4.00							4.00	
CL-8-TSB-1.50	1/2-13	1/2	1/2 9/16 5/8 14mm 16mm	1/4	13/16	15/16	1.50	1.00
CL-8-TSB-2.00							2.00	1.25
CL-8-TSB-2.50							2.50	1.50
CL-8-TSB-3.00							3.00	
CL-8-TSB-3.50							3.50	
CL-8-TSB-4.00							4.00	
CL-8-TSB-5.00							5.00	
CL-8-TSB-6.00							6.00	2.00
CL-10-TSB-1.50	5/8-11	5/8	5/8 11/16 3/4 18mm 20mm	5/16	1-1/32	1-3/16	1.50	1.00
CL-10-TSB-2.00							2.00	1.25
CL-10-TSB-2.50							2.50	1.50
CL-10-TSB-3.00							3.00	
CL-10-TSB-3.50							3.50	
CL-10-TSB-4.00							4.00	
CL-10-TSB-5.00							5.00	
CL-10-TSB-6.00							6.00	2.00
CL-10-TSB-8.00							8.00	3.00
CL-12-TSB-3.00	3/4-10	3/4	3/4 13/16 20mm 22mm	3/8	1-1/4	1-7/16	1.50	3.00
CL-12-TSB-3.50								3.50
CL-12-TSB-4.00								4.00
CL-12-TSB-5.00								5.00
CL-12-TSB-6.00							6.00	2.00
CL-12-TSB-8.00							8.00	3.00

T-Slot Bolt Kit

34-piece set includes a complete range of T-Slot-Bolt lengths, with matching extension Studs, Flange Nuts, and Coupling Nuts. Set includes:

- (4) T-Slot Bolts in each of five different lengths
- (4) Studs
- (6) Flange Nuts
- (4) Coupling Nuts
- (1) Handy Holder

T-SLOT BOLT KITS (USA)

PART NO.	FITS TABLE SIZES	T-SLOT BOLTS (4 EACH)	STUDS (4)	FLANGE NUTS (6)	COUPLING NUTS (4)	HOLDER (1)
CL-6-TSBK	3/8, 7/16, 1/2 10mm, 12mm	CL-6-TSB-1.50 CL-6-TSB-2.00 CL-6-TSB-2.50 CL-6-TSB-3.00 CL-6-TSB-4.00	CL-3/8-16X4.00-STUD	CL-2-FN	CL-1-CN	CL-1-TNH
CL-8-TSBK	1/2, 9/16, 5/8 14mm, 16mm	CL-8-TSB-2.00 CL-8-TSB-3.00 CL-8-TSB-4.00 CL-8-TSB-5.00 CL-8-TSB-6.00	CL-1/2-13X5.00-STUD	CL-3-FN	CL-2-CN	CL-2-TNH
CL-10-TSBK	5/8, 11/16, 3/4 16mm, 18mm	CL-10-TSB-3.00 CL-10-TSB-4.00 CL-10-TSB-5.00 CL-10-TSB-6.00 CL-10-TSB-8.00	CL-5/8-11X6.00-STUD	CL-4-FN	CL-3-CN	CL-3-TNH
CL-12-TSBK	3/4, 13/16 20mm, 22mm	CL-12-TSB-3.00 CL-12-TSB-4.00 CL-12-TSB-5.00 CL-12-TSB-6.00 CL-12-TSB-8.00	CL-3/4-10X7.00-STUD	CL-5-FN	CL-4-CN	CL-4-TNH

Carr Lane®
MANUFACTURING CO.
4200 Carr Lane Ct., P.O. Box 191970
St. Louis, Missouri 63119-7970 USA
Phone: 314-647-6200, FAX: 314-647-5736
Web Site: www.carrlane.com

(Rev. 7-08)

EYE BOLTS

STEEL: 1144, 115,000 PSI MIN. TENSILE STRENGTH, 100,000 PSI MIN. YIELD STRENGTH, BLACK OXIDE FINISH
STAINLESS STEEL: 300 SERIES

ADDITIONAL STAINLESS SIZES!

High-strength Eye Bolt with a reamed bearing hole. High-carbon steel, fully machined from solid barstock. Also available in stainless steel. Available in other lengths and materials as a special.

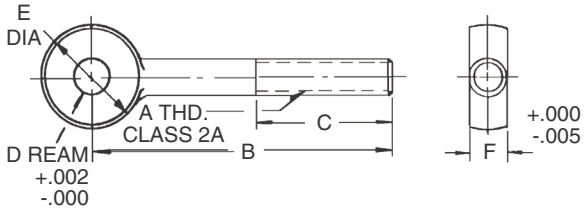

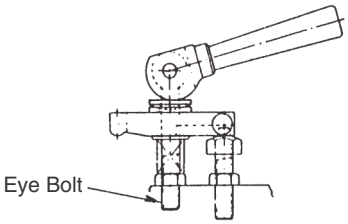

USA

PART NO. STEEL	PART NO. STAINLESS STEEL	A	D DIA NOMINAL	D DIA ACTUAL	B	C	E	F NOMINAL	F ACTUAL
CL-25-EB	CL-25-EB-S	1/4-20	3/16	.188	2	3/4	1/2	1/4	.250
CL-26-EB	CL-26-EB-S				3	1-1/4			
CL-31-EB	CL-31-EB-S	5/16-18	1/4	.250	3	1-1/2	5/8	5/16	.312
CL-32-EB	—				4	2			
CL-38-EB	—	3/8-16	5/16	.312	3	1-1/2	3/4	3/8	.375
CL-40-EB	CL-40-EB-S		3/8	.375	3	1-1/2			
CL-37-EB	—				3-3/4	2			
CL-39-EB	CL-39-EB-S				5	2-1/2			
CL-50-EB	CL-50-EB-S	1/2-13	3/8	.375	3-3/4	1-1/2	1	1/2	.500
CL-51-EB	CL-51-EB-S				5	2			
CL-62-EB	CL-62-EB-S	5/8-11	5/8	.625	4-1/2	2	1-1/4	5/8	.625
CL-63-EB	CL-63-EB-S				6	2-1/2			
CL-75-EB	—	3/4-10	5/8	.625	6	2-1/2	1-1/2	3/4	.750
CL-76-EB	—		3/4	.750	6	2-1/2			

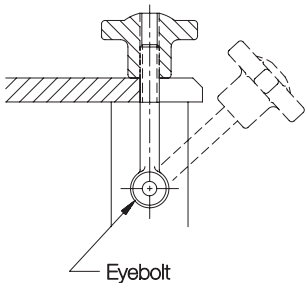

METRIC

CLM-25A-EB	CLM-25A-EB-S	M6	6mm	.236	1.97	.79	.47	6mm	.236
CLM-26A-EB	—				2.95	1.18			
CLM-31A-EB	CLM-31A-EB-S	M8	8mm	.315	2.95	1.57	.63	8mm	.315
CLM-32A-EB	—				3.94	1.97			
CLM-40-EB	CLM-40-EB-S	M10	10mm	.394	2.95	1.57	.79	10mm	.394
CLM-37-EB	CLM-37-EB-S				3.94	1.97			
CLM-39-EB	—				4.92	2.56			
CLM-50A-EB	CLM-50A-EB-S	M12	12mm	.472	3.94	1.57	.94	12mm	.472
CLM-51A-EB	CLM-51A-EB-S				4.92	1.97			
CLM-62-EB	CLM-62-EB-S	M16	16mm	.630	4.53	1.97	1.26	16mm	.630
CLM-63-EB	CLM-63-EB-S				5.91	2.56			
CLM-76A-EB	—	M20	20mm	.787	5.91	2.56	1.57	20mm	.787

Carr Lane®
MANUFACTURING CO.
4200 Carr Lane Ct., P.O. Box 191970
St. Louis, Missouri 63119-7970 USA
Phone: 314-647-6200, FAX: 314-647-5736
Web Site: www.carrlane.com

(Rev. 7-08)

SWING BOLTS

STEEL: 1144, 115,000 PSI MIN. TENSILE STRENGTH, 100,000 PSI MIN. YIELD STRENGTH, BLACK OXIDE FINISH

Shoulder-type Eye Bolt that can be used as a stationary hinge point. Reamed hole for smooth bearing.

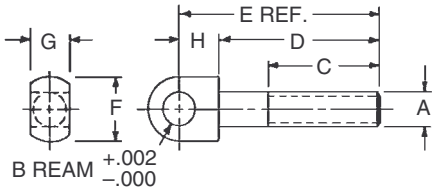

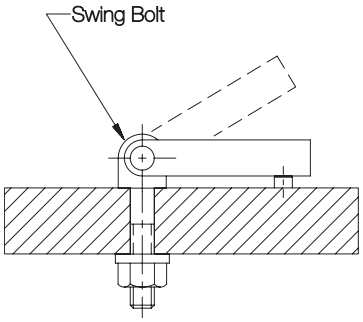

USA

PART NO.	A	B DIA NOMINAL	B DIA ACTUAL	C	D	E	F DIA	G NOMINAL	G ACTUAL	H
CL-00-SB	1/4-20	1/4	.250	3/4	1-3/16	1-1/2	1/2	5/16	.312	5/16
CL-0-SB	5/16-18	5/16	.312	1	1-5/8	2	5/8	3/8	.375	3/8
CL-1-SB	3/8-16	3/8	.375	1-3/8	2	2-1/2	3/4	1/2	.500	1/2
CL-2-SB	1/2-13	1/2	.500	1-3/4	2-1/2	3-1/8	1	5/8	.625	5/8
CL-2A-SB				2-1/4	3-1/2	4-1/8				
CL-3-SB	5/8-11	5/8	.625	1-3/4	2-3/4	3-1/2	1-1/4	3/4	.750	3/4
CL-3A-SB				2-1/2	4	4-3/4				

METRIC

CLM-00-SB	M6	6mm	.236	.79	1.18	1.57	.47	8mm	.315	.39
CLM-0-SB	M8	8mm	.315	.98	1.57	1.96	.63	10mm	.394	
CLM-1-SB	M10	10mm	.394	1.38	1.97	2.56	.79	12mm	.472	.59
CLM-2-SB	M12	12mm	.472	1.77	2.56	3.15	.94	14mm	.551	.59
CLM-2A-SB				2.17	3.54	4.13				
CLM-3-SB	M16	16mm	.630	1.77	2.76	3.55	1.26	18mm	.709	.79
CLM-3A-SB				2.56	3.94	4.73				

I try not to become a man of success, but rather try to become a man of value.

— Albert Einstein

CarrLane®
MANUFACTURING CO.
4200 Carr Lane Ct., P.O. Box 191970
St. Louis, Missouri 63119-7970 USA
Phone: 314-647-6200, FAX: 314-647-5736
Web Site: www.carrlane.com

(Rev. 12-07)

DOUBLE CAMS

1020 STEEL, CARBURIZED-HARDENED BLACK OXIDE FINISH

Straddle-type cam handle that can be used with an Eyebolt or custom-made drawbar. Continuous-rise spiral cam locks securely in any position. Available in six USA and five metric sizes.

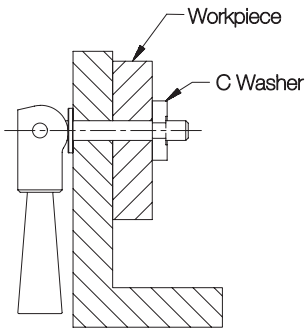

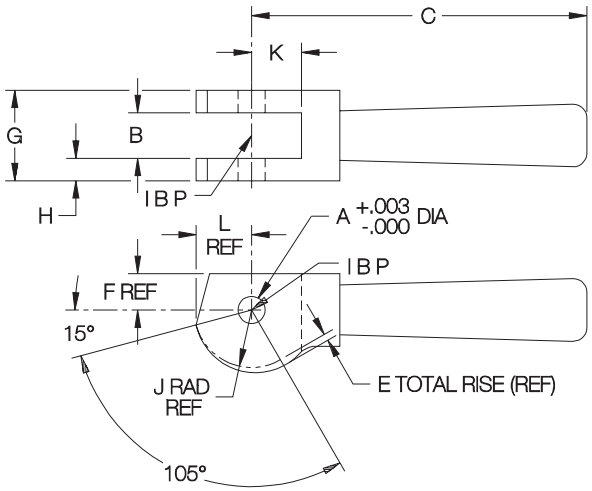

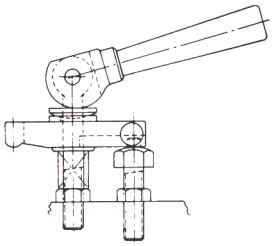

Double Cams are used with Eyebolts on Slotted-Heel Clamp Assemblies. See page 183.

USA

PART NO.	MATCHING EYEBOLT SIZE	A DIA NOMINAL	A DIA ACTUAL	B NOMINAL	B ACTUAL	C	E	F	G	H	J	K	L	CLEVIS PIN REQD
CL-11-CH	1/4-20	3/16	.188	1/4	.266	2-17/32	.046	1/4	5/8	3/16	.40	.33	.38	CL-610-CLVP
CL-11A-CH	5/16-18	1/4	.250	5/16	.328					5/32				CL-810-CLVP
CL-12-CH	3/8-16	5/16	.313	3/8	.390	3-13/16	.062	5/16	7/8	1/4	.52	.54	.50	CL-1014-CLVP
CL-13-CH	1/2-13	3/8	.376	1/2	.516	4-5/8	.094	1/2	1-1/8	5/16	.79	.69	.76	CL-1218-CLVP
CL-14-CH	5/8-11	5/8	.626	5/8	.641	4-15/16	.109	9/16	1-1/4		.92	.85	.89	CL-2020-CLVP
CL-15-CH	3/4-10	5/8	.626	3/4	.766	5-1/8	.141	5/8	1-1/2	3/8	1.19	1.00	1.15	CL-2024-CLVP

METRIC

CLM-11-CH	M6	6mm	.237	6mm	.266	2-17/32	.046	1/4	5/8	3/16	.40	.33	.38	CLM-616-CLVP
CLM-12-CH	M10	10mm	.395	10mm	.409	3-13/16	.062	5/16	7/8	1/4	.52	.54	.50	CLM-1023-CLVP
CLM-13-CH	M12	12mm	.473	12mm	.516	4-5/8	.094	1/2	1-1/8	5/16	.79	.69	.76	CLM-1229-CLVP
CLM-14-CH	M16	16mm	.631	16mm	.641	4-15/16	.109	9/16	1-1/4		.92	.85	.89	CLM-1632-CLVP
CLM-15-CH	M20	20mm	.788	20mm	.803	5-1/8	.141	5/8	1-1/2	3/8	1.19	1.00	1.15	CLM-2038-CLVP

SINGLE CAMS

1020 STEEL, CARBURIZED-HARDENED, BLACK OXIDE FINISH

Simple cam handle that mounts in a slot, or against a flat surface. Continuous-rise spiral cam locks securely in any position. Available in five sizes.

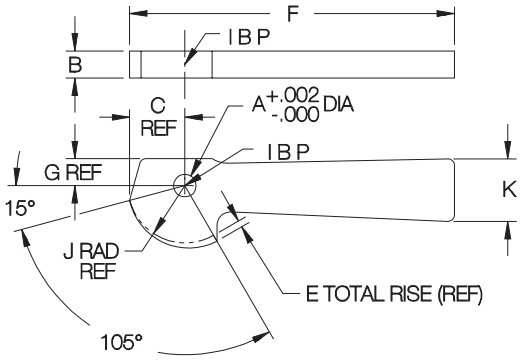

PART NO.	A DIA	B	C	E	F	G	J	K	CLEVIS PIN REQD
CL-1-CH	5/32	3/16	.38	.046	2-1/4	3/16	.40	1/2	CL-510-CLVP
CL-2-CH	1/4	1/4	.50	.062	3-1/4	1/4	.52	11/16	CL-816-CLVP
CL-3-CH	5/16	3/8	.76	.094	4-1/2	3/8	.79	7/8	CL-1020-CLVP
CL-4-CH	3/8	1/2	.89	.109	5	7/16	.92	15/16	CL-1224-CLVP
CL-5-CH	1/2	5/8	1.15	.141	5-1/2	1/2	1.19	1	CL-1628-CLVP

Carr Lane®
MANUFACTURING CO.
4200 Carr Lane Ct., P.O. Box 191970
St. Louis, Missouri 63119-7970 USA
Phone: 314-647-6200, FAX: 314-647-5736
Web Site: www.carrlane.com

(Rev. 12-07)

CLAMP RESTS

STEEL: 12L14, CARBURIZED-HARDENED, BLACK OXIDE FINISH
STAINLESS STEEL: 300 SERIES

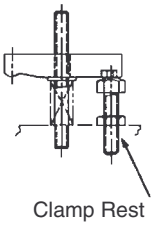

Steel

Rear support for Slotted-Heel Clamp Straps. Steel version has a hex head for adjustment, and is furnished with a jam nut. Stainless steel version has a drilled hole for turning with a rod.

Stainless Steel

STEEL (USA)

PART NO.	A	C DIA	D	E	F	G
CL-1-CR	1/4-20	5/32	1/8	1/4	7/16	1-1/8
CL-1A-CR	5/16-18	7/32	3/16	5/16	1/2	1-11/16
CL-1B-CR						2-7/16
CL-2-CR	3/8-16	11/32	7/32	3/8	9/16	2-1/32
CL-3-CR						3-21/32
CL-4-CR	1/2-13	11/32	1/4	1/2	11/16	2-1/8
CL-5-CR						3-5/8
CL-6-CR	5/8-11	15/32	1/4	5/8	7/8	2-3/8
CL-7-CR						3-5/8
CL-8-CR	3/4-10	15/32	1/4	5/8	1-1/16	2-1/2
CL-9-CR						3-5/8

STEEL (METRIC)

CLM-1-CR	M6	.157	.118	.20	10mm	1.06
CLM-1A-CR	M8	.217	.157	.31	13mm	1.77
CLM-2-CR	M10	.343	.236	.39	17mm	1.93
CLM-3-CR						3.70
CLM-4-CR	M12	.343	.236	.59	19mm	2.13
CLM-4A-CR						3.70
CLM-5-CR	M16	.472	.236	.59	24mm	2.13
CLM-7-CR						3.70
CLM-8-CR	M20	.472	.276	.59	30mm	2.48
CLM-9-CR						3.66

STAINLESS STEEL (USA)

PART NO.	A	B	C	D DIA	E
CL-13407	#10-32	1/2	3/4	3/32	1/8
CL-13410		3/4	1		
CL-13415		1-1/4	1-1/2		
CL-13510	1/4-20	11/16	1	1/8	1/8
CL-13515		1-3/16	1-1/2		3/16
CL-13520		1-7/16	1-3/4		1/4
CL-13612	5/16-18	7/8	1-1/4	5/32	3/16
CL-13615		1-1/8	1-1/2		
CL-13620		1-5/8	2		
CL-13715	3/8-16	1-1/8	1-1/2	3/16	3/16
CL-13717		1-3/8	1-3/4		
CL-13727		2-3/8	2-3/4		

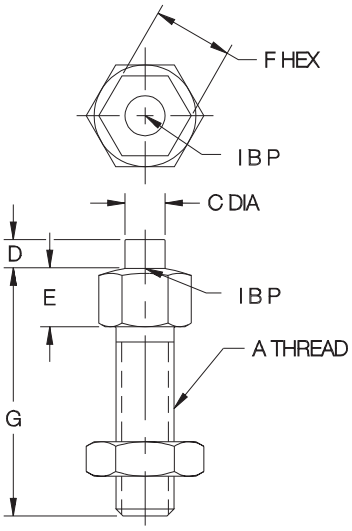

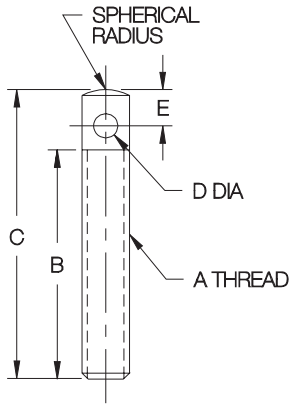

CLAMP REST SCREWS

STEEL: 12L14, CARBURIZED-HARDENED, BLACK OXIDE FINISH

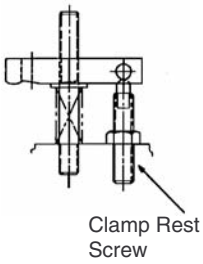

Rear support for Drill-Spot-Heel Clamp Straps.

USA

PART NO.	A	B	C DIA	D	E
CL-1-CRS	3/8-16	2	.250	.313	1/4
CL-2-CRS		2-1/2			
CL-3-CRS		3			
CL-4-CRS	1/2-13	2	.344	.313	3/8
CL-5-CRS		2-1/2			
CL-6-CRS		3			

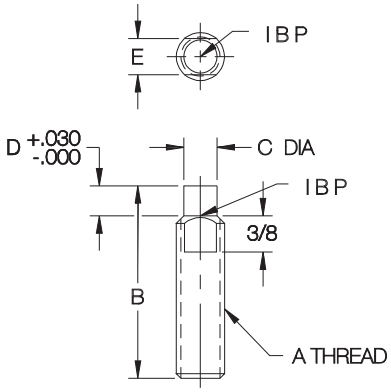

CarrLane® MANUFACTURING CO.
4200 Carr Lane Ct., P.O. Box 191970
St. Louis, Missouri 63119-7970 USA
Phone: 314-647-6200, FAX: 314-647-5736
Web Site: www.carrlane.com

(Rev. 12-07)

GUIDE BLOCKS

1018 STEEL, CARBURIZED-HARDENED, BLACK OXIDE FINISH

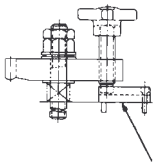

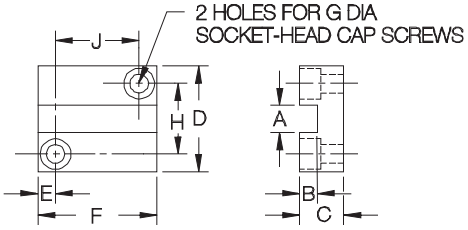

Rear slide block for Tapped-Heel Clamp Straps. Guides Clamp Strap straight back for loading.

PART NO.	FITS STUD SIZE	A	B	C	D	E	F	G	H	J
CL-2-GB	1/4-20 or M6	.198	.10	1/4	3/4	13/64	1-3/16	#6-32 or M4	15/32	25/32
CL-4-GB	3/8-16 or M10	.265	.20	1/2	1-1/8	7/32	2	#10-32 or M5	3/4	1-9/16
CL-6-GB	1/2-13 or M12	.390	.25	5/8	1-1/2	1/4	1-11/16	1/4-20 or M6	1	1-3/16
CL-8-GB	5/8-11 or M16	.515					1-5/8			1-1/8
CL-11-GB	3/4-10 or M20	.640	.37	3/4	1-3/4		2-13/32		1-1/4	1-29/32

CLAMP SPRINGS

STEEL: SPRING STEEL, BLACK OXIDE FINISH
STAINLESS STEEL: 300-SERIES

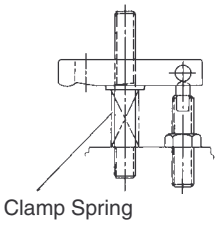

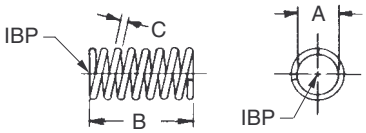

Sturdy spring that holds up a Clamp Strap for clear loading. Stainless steel springs are also available in custom lengths from 0.3 inches to 10.0 inches, in 0.1-inch increments. Note: Custom-length springs have open ends, while standard-length springs have closed ends. Examples:

CL-2430.7 Standard 0.7-inch length (#10-32)
CL-2431.5 Custom 1.5-inch length (#10-32)

STEEL

PART NO.	FITS STUD SIZE	A DIA	B	C DIA	NO. OF COILS
CL-5-SPG	1/4-20 or M6	19/64	1-1/8	.062	7
CL-6-SPG	5/16-18 or M8	23/64	1-7/32		6
CL-7-SPG	3/8-16 or M10	7/16	1-9/16		8
CL-9-SPG	1/2-13 or M12	9/16	1-11/16		7
CL-11-SPG	5/8-11 or M16	11/16	1-3/4	.091	5
CL-13-SPG	3/4-10 or M20	13/16	2-1/2		6-1/2

STAINLESS STEEL

CL-2430.7	#10-32 or M5	13/64	.7	.042	5-1/2
CL-2440.7	1/4-20 or M6	17/64			
CL-2450.7	5/16-18 or M8	21/64	.7	.049	5
CL-2461.0	3/8-16 or M10	13/32	1.0		7

CarrLane®
MANUFACTURING CO.
4200 Carr Lane Ct., P.O. Box 191970
St. Louis, Missouri 63119-7970 USA
Phone: 314-647-6200, FAX: 314-647-5736
Web Site: www.carrlane.com

(Rev. 12-07)

CLAMPING KITS

SEE PAGES 199, 216, 221 & 223 FOR MATERIAL SPECIFICATIONS

Standard Blocks
Metal Holder

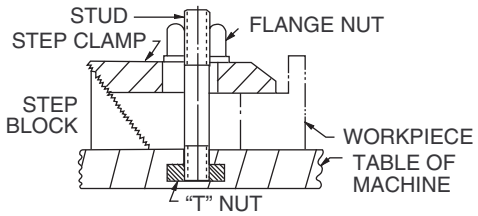

High-Rise Blocks
Wooden Holder

Economical Clamping Kit with a wide assortment of Step Clamps and Blocks. Fully machined from top-grade steel. Available with standard Step Blocks in a metal holder (for wall or machine mounting), or with wider high-rise blocks in a wooden holder.

Each Kit Contains:
(24) Studs
(6) T-Slot Nuts
(6) Flange Nuts
(4) Coupling Nuts
(6) Step Blocks
(6) Step Clamps

STANDARD BLOCKS (USA)

PART NO.	STUD SIZE	TABLE SLOT SIZE	T-NUT & STUD SET (1)	STEP CLAMPS (2) EACH	STEP BLOCK PAIRS (2) EACH	HOLDER (1)
CL-1-CK	3/8-16	7/16	CL-1-TNS	CL-32-STC CL-34-STC CL-36-STC	CL-10-BS CL-20-BS CL-30-BS	CL-1-CKMH
CL-20-CK		12mm	CL-14-TNS			
CL-2-CK		1/2	CL-2-TNS			
CL-3-CK		9/16 or 14mm	CL-3-TNS			
CL-24-CK		5/8 or 16mm	CL-17-TNS			
CL-4-CK	1/2-13	9/16 or 14mm	CL-4-TNS	CL-42-STC CL-44-STC CL-46-STC	CL-10-BS CL-20-BS CL-30-BS	CL-2-CKMH
CL-5-CK		5/8 or 16mm	CL-5-TNS			
CL-6-CK		11/16 or 18mm	CL-6-TNS			
CL-25-CK		3/4	CL-18-TNS			
CL-7-CK	5/8-11	11/16 or 18mm	CL-7-TNS	CL-52-STC CL-54-STC CL-56-STC	CL-10-BS CL-20-BS CL-30-BS	CL-3-CKMH
CL-8-CK		3/4	CL-8-TNS			
CL-21-CK		20mm	CL-15-TNS			
CL-9-CK		13/16	CL-9-TNS			

HIGH-RISE BLOCKS (USA)

PART NO.	STUD SIZE	TABLE SLOT SIZE	T-NUT & STUD SET (1)	STEP CLAMPS (2) EACH	STEP BLOCK PAIRS (2) EACH	HOLDER (1)
CL-10-CK	1/2-13	9/16 or 14mm	CL-4-TNS	CL-42-STC CL-44-STC CL-46-STC	CL-40-BS CL-50-BS CL-60-BS	CL-4-CKH
CL-11-CK		5/8 or 16mm	CL-5-TNS			
CL-12-CK		11/16 or 18mm	CL-6-TNS			
CL-26-CK		3/4	CL-18-TNS			
CL-13-CK	5/8-11	11/16 or 18mm	CL-7-TNS	CL-52-STC CL-54-STC CL-56-STC	CL-40-BS CL-50-BS CL-60-BS	CL-5-CKH
CL-14-CK		3/4	CL-8-TNS			
CL-22-CK		20mm	CL-15-TNS			
CL-15-CK		13/16	CL-9-TNS			
CL-16-CK	3/4-10	13/16	CL-10-TNS	CL-64-STC CL-66-STC CL-68-STC	CL-40-BS CL-50-BS CL-60-BS	CL-6-CKH
CL-23-CK		22mm	CL-16-TNS			
CL-17-CK		7/8	CL-11-TNS			
CL-18-CK		1	CL-12-TNS			
CL-19-CK		1-1/16	CL-13-TNS			

STANDARD BLOCKS (METRIC)

CLM-1-CK	M10	12mm	CLM-1-TNS	CL-32-STC CL-34-STC CL-36-STC	CL-10-BS CL-20-BS CL-30-BS	CL-1-CKMH
CLM-2-CK		1/2	CLM-2-TNS			
CLM-3-CK		9/16 or 14mm	CLM-3-TNS			
CLM-4-CK	M12	9/16 or 14mm	CLM-4-TNS	CL-42-STC CL-44-STC CL-46-STC	CL-10-BS CL-20-BS CL-30-BS	CL-2-CKMH
CLM-5-CK		5/8 or 16mm	CLM-5-TNS			
CLM-6-CK		11/16 or 18mm	CLM-6-TNS			
CLM-7-CK	M16	11/16 or 18mm	CLM-7-TNS	CL-52-STC CL-54-STC CL-56-STC	CL-10-BS CL-20-BS CL-30-BS	CL-3-CKMH
CLM-8-CK		20mm	CLM-8-TNS			
CLM-9-CK		13/16	CLM-9-TNS			

HIGH-RISE BLOCKS (METRIC)

CLM-10-CK	M12	9/16 or 14mm	CLM-4-TNS	CL-42-STC CL-44-STC CL-46-STC	CL-40-BS CL-50-BS CL-60-BS	CL-4-CKH
CLM-11-CK		5/8 or 16mm	CLM-5-TNS			
CLM-12-CK		11/16 or 18mm	CLM-6-TNS			
CLM-13-CK	M16	11/16 or 18mm	CLM-7-TNS	CL-52-STC CL-54-STC CL-56-STC	CL-40-BS CL-50-BS CL-60-BS	CL-5-CKH
CLM-14-CK		20mm	CLM-8-TNS			
CLM-15-CK		13/16	CLM-9-TNS			
CLM-17-CK	M20	22mm	CLM-11-TNS	CL-64-STC CL-66-STC CL-68-STC	CL-40-BS CL-50-BS CL-60-BS	CL-6-CKH

Carr Lane®
MANUFACTURING CO.
4200 Carr Lane Ct., P.O. Box 191970
St. Louis, Missouri 63119-7970 USA
Phone: 314-647-6200, FAX: 314-647-5736
Web Site: www.carrlane.com

(Rev. 12-07)

DELUXE CLAMPING KITS

SEE CATALOG PAGE OF EACH COMPONENT FOR MATERIAL SPECIFICATIONS
HOLDER: STEEL, ENAMEL PAINT

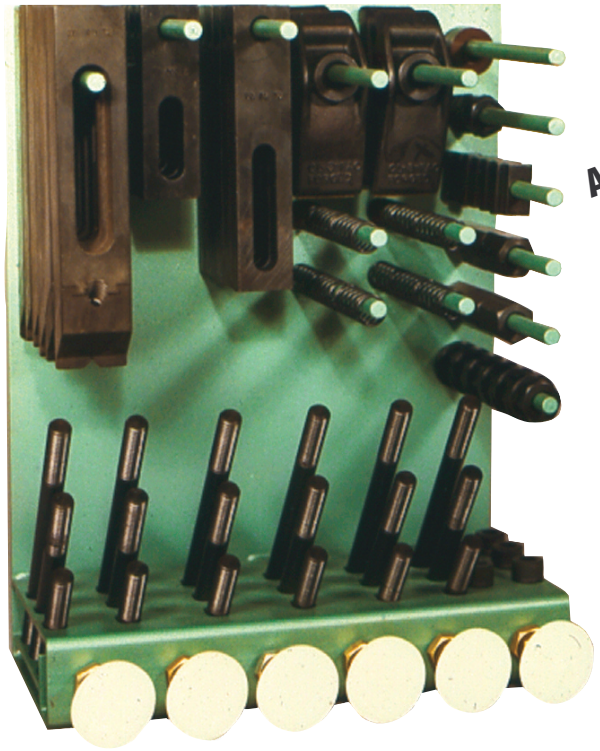

ADDITIONAL SIZES NOW AVAILABLE!

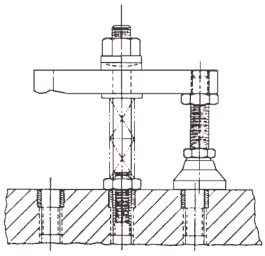

Clamp Strap Assemblies

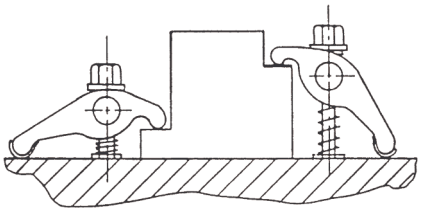

Forged Adjustable Clamps

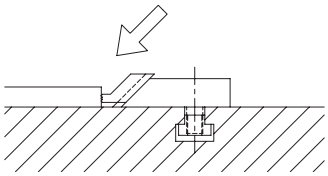

Serrated Edge Clamps

New, improved Clamping Kit with three different types of clamps. Safer and less cumbersome than sets using Step Blocks and Clamps. This 94-piece set includes:

- (12) Tapped-Heel Clamp Straps, short and long
- (4) Forged Adjustable Clamps
- (6) Serrated Edge Clamps
- (6) Stud Leveling Feet
- (6) T Nuts
- (6) Short Clamping Studs
- (6) Medium Clamping Studs
- (6) Long Clamping Studs
- (6) Spherical Nuts & Washers
- (6) Coupling Nuts
- (6) Jam Nuts
- (6) Flat Washers
- (12) Clamp Springs
- (6) Socket-Head Cap Screws
- (1) Sturdy Steel Rack

Available to fit table-slot sizes from 7/16" to 13/16" (12mm to 20mm in metric), in thread sizes from 3/8"-16 to 5/8"-11 (M10 to M16 in metric).

The Stud Leveling Feet in these kits serve as the rear supports for Tapped-Heel Clamp Straps. These leveling feet are optionally available with Delrin® pads to avoid marring the table when less clamping force is required, such as when used on coordinate measuring machines.

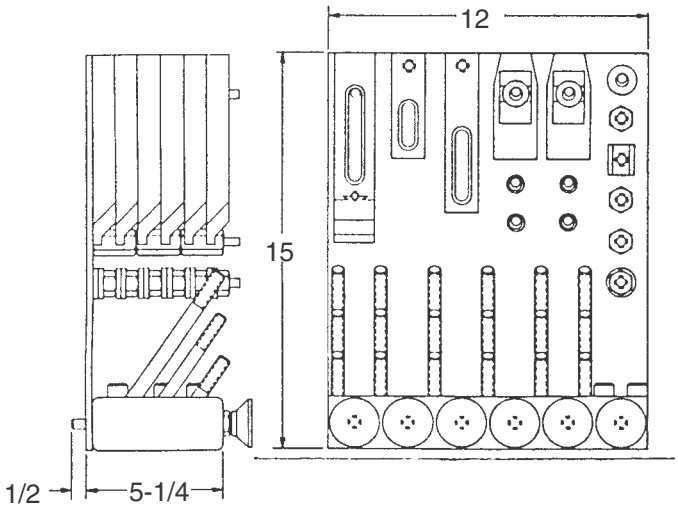

MANUFACTURING CO.
4200 Carr Lane Ct., P.O. Box 191970
St. Louis, Missouri 63119-7970 USA
Phone: 314-647-6200, FAX: 314-647-5736
Web Site: www.carrlane.com

(Rev. 12-07)

DELUXE CLAMPING KITS

(6) Short Clamp Straps | (6) Long Clamp Straps | (4) Forged Adjustable Clamps | (6) Serrated Adjustable Clamps | (6) Short Studs | (6) Medium Studs | (6) Long Studs

(6) Stud Leveling Feet | (6) T Nuts | (6) Coupling Nuts | (6) Spherical Nuts & Washers | (6) Jam Nuts | (6) Flat Washers | (12) Springs | (6) Socket Head Cap Screws

USA

PART NO. STEEL PADS	PART NO. DELRIN® PADS	TABLE SLOT SIZE	STUD SIZE	CLAMP STRAPS (6 EACH)	FORGED ADJ. CLPS. (4)	SERR. ADJ. CLPS. (4)	STUDS (6 EACH)	LEVELING FEET (6)	T NUTS (6)	NUTS & WASHERS (6 EACH)	SPRINGS (12)	SOCKET-HEAD CAP SCREWS (6)
CL-1-DCK	CL-1-DCKN	7/16	3/8-16	CL-63-CS CL-67-CS	CL-6-FAC	CL-30-SAC	CL-3/8-16x3.00-STUD CL-3/8-16x5.00-STUD CL-3/8-16x7.00-STUD	CL-6-SLF-BO or CL-6-SLFN	CL-00-TN	CL-1-CN CL-2-SNW CL-6-JN CL-1-FW	CL-9-SPG	CL-3/8-16x1.25-SHCS
CL-20-DCK	CL-20-DCKN	12mm							CL-12-TN			
CL-2-DCK	CL-2-DCKN	1/2							CL-0-TN			
CL-3-DCK	CL-3-DCKN	9/16 or 14mm							CL-1-TN			
CL-24-DCK	CL-24-DCKN	5/8 or 16mm							CL-16-TN			
CL-4-DCK	CL-4-DCKN	9/16 or 14mm	1/2-13	CL-71-CS CL-75-CS	CL-8-FAC	CL-60-SAC	CL-1/2-13x4.00-STUD CL-1/2-13x6.00-STUD CL-1/2-13x8.00-STUD	CL-8-SLF-BO or CL-8-SLFN	CL-9-TN	CL-2-CN CL-3-SNW CL-8-JN CL-2-FW	CL-9-SPG	CL-1/2-13x1.50-SHCS
CL-5-DCK	CL-5-DCKN	5/8 or 16mm							CL-2-TN			
CL-6-DCK	CL-6-DCKN	11/16 or 18mm							CL-3-TN			
CL-7-DCK	CL-7-DCKN	3/4							CL-17-TN			
CL-27-DCK	CL-27-DCKN	11/16 or 18mm	5/8-11	CL-81-CS CL-85-CS	CL-10-FAC	CL-90-SAC	CL-5/8-11x4.00-STUD CL-5/8-11x6.00-STUD CL-5/8-11x8.00-STUD	CL-10-SLF-BO or CL-10-SLFN	CL-10-TN	CL-10-TN CL-4-SNW CL-10-JN CL-3-FW	CL-9-SPG	CL-5/8-11x1.50-SHCS
CL-8-DCK	CL-8-DCKN	3/4							CL-4-TN			
CL-21-DCK	CL-21-DCKN	20mm							CL-14-TN			
CL-9-DCK	CL-9-DCKN	13/16							CL-5-TN			

METRIC

CLM-1-DCK	CLM-1-DCKN	12mm	M10	CLM-63-CS CLM-67-CS	CL-6-FAC	CL-30-SAC	CLM-10x80-STUD	CLM-10-SLF-BO or CLM-10-SLFN	CLM-00-TN	CLM-10-CN CLM-10-SNW CLM-10-JN CL-1-FW	CL-7-SPG	CLM-10x30-SHCS
CLM-2-DCK	CLM-2-DCKN	1/2					CLM-10x125-STUD		CLM-0-TN			
CLM-3-DCK	CLM-3-DCKN	9/16 or 14mm					CLM-10x175-STUD		CLM-1-TN			
CLM-4-DCK	CLM-4-DCKN	9/16 or 14mm	M12	CLM-71-CS CLM-75-CS	CL-8-FAC	CL-60-SAC	CLM-12x95-STUD	CLM-12-SLF-BO or CLM-12-SLFN	CLM-9-TN	CLM-12-CN CLM-12-SNW CLM-12-JN CL-2-FW	CL-9-SPG	CLM-12x40-SHCS
CLM-5-DCK	CLM-5-DCKN	5/8 or 16mm					CLM-12x150-STUD		CLM-2-TN			
CLM-6-DCK	CLM-6-DCKN	11/16 or 18mm					CLM-12x200-STUD		CLM-3-TN			
CLM-7-DCK	CLM-7-DCKN	11/16 or 18mm	M16	CLM-81-CS CLM-85-CS	CL-10-FAC	CL-90-SAC	CLM-16x110-STUD	CLM-16-SLF-BO or CLM-16-SLFN	CLM-10-TN	CLM-16-CN CLM-16-SNW CLM-16-JN CL-3-FW	CL-11-SPG	CLM-16x40-SHCS
CLM-8-DCK	CLM-8-DCKN	20mm					CLM-16x150-STUD		CLM-4-TN			
CLM-9-DCK	CLM-9-DCKN	13/16					CLM-16x200-STUD		CLM-5-TN			

Carr Lane MANUFACTURING CO.®
4200 Carr Lane Ct., P.O. Box 191970
St. Louis, Missouri 63119-7970 USA
Phone: 314-647-6200, FAX: 314-647-5736
Web Site: www.carrlane.com

(Rev. 4-08)

BAR-LOK™ QUICK-ACTING C CLAMPS

CLAMPING BAR AND COLLAR: 12L14 STEEL, CARBURIZED-HARDENED, COPPER COATED.
SLIDING HANDLE AND SWIVEL FOOT: 12L14 STEEL, COPPER COATED. FRAME: NODULAR IRON.

This heavy-duty C clamp features our patented Bar-Lok quick-acting screw mechanism (see page 67). This unique grooved-bar design works smoothly and positively — just slide the bar forward to contact the workpiece, then turn clockwise to apply force. To unclamp, turn counterclockwise and slide the bar back. The long sliding handle provides excellent leverage. All moving components are copper-coated to protect from spatter in welding applications. As strong as a standard C clamp, but much faster. Available in four frame sizes. Standard-throat version provides up to 2400 lbs clamping force. Deep-throat version provides up to 1500 lbs clamping force. Optional rubber pads (for the swivel foot and frame) are available separately, to avoid marring sensitive surfaces. Patent no. 6,726,193.

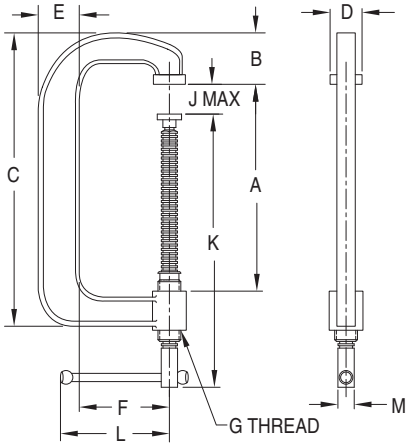

Standard Throat

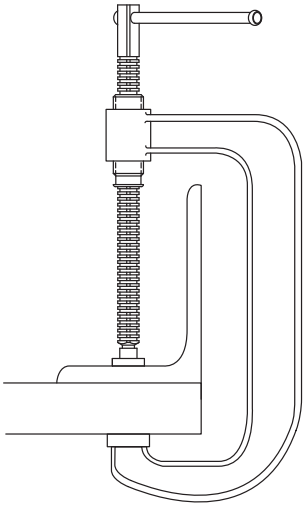

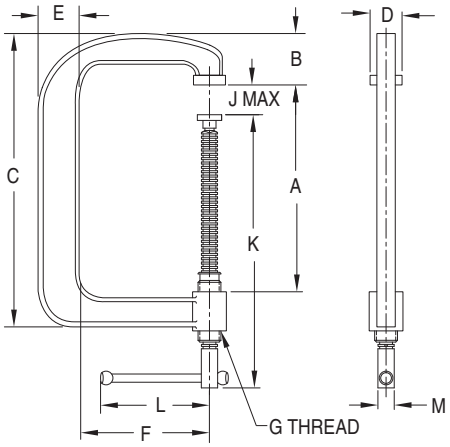

Deep Throat

Bar-Lok C Clamps are ideal for applications that require quickly extending and retracting the clamping screw its full length.

NEW MINI SIZE!

STANDARD THROAT

PART NO.	OPENING	A	B	C	D	E	F	G	J	K	L	M	OPTIONAL SET OF RUBBER PADS
CL-1-BLC	1-1/4"	1-9/16	5/8	2-7/8	1/2	3/4	1-3/16	7/16-20	1-1/4	3-1/16	1-5/8	1/4	—
CL-4-BLC	4"	4.80	2.17	8.27	1.26	1.46	2.52	7/8-9	4	8.5	4.25	.50	CL-1-BLCP
CL-6-BLC	6"	6.75	2.54	10.71		1.65	2.76		6	10.5			
CL-8-BLC	8"	8.86	2.72	13.31		1.81	4.02		8	12.5			

DEEP THROAT

CL-40-BLC	4"	4.80	2.17	8.27	1.26	1.46	4.49	7/8-9	4	8.5	4.25	.50	CL-1-BLCP
CL-60-BLC	6"	6.75	2.54	10.71		1.65	4.72		6	10.5			
CL-80-BLC	8"	8.86	2.72	13.31		1.81	5.98		8	12.5			

Carr Lane®
MANUFACTURING CO.
4200 Carr Lane Ct., P.O. Box 191970
St. Louis, Missouri 63119-7970 USA
Phone: 314-647-6200, FAX: 314-647-5736
Web Site: www.carrlane.com

(Rev. 7-03)

DURACLAMP PLASTIC C CLAMPS

FIBERGLASS-REINFORCED THERMOPLASTIC

High-strength fiberglass-reinforced plastic C clamps, ideal for finishing operations and other corrosive environments. Also ideal wherever a lightweight C clamp is required. Chemically inert and electrically non-conductive. Highly resistant to virtually all acid and alkali solutions, and boiling water (212° F maximum recommended continuous operating temperature, 290° F for intermittent operation). No stripping required after use. Large, comfortable thumbscrew for easy hand tightening. Available in four sizes.

Also available with alumina oxide (Al_2O_3) tips. Well suited for two-step anodizing processes. Dual tips allow rack mounting two parts back-to-back during finishing. These super-hard tips (1/16" radius) reduce contact area to a small point to minimize rack marks, yet still hold parts securely.

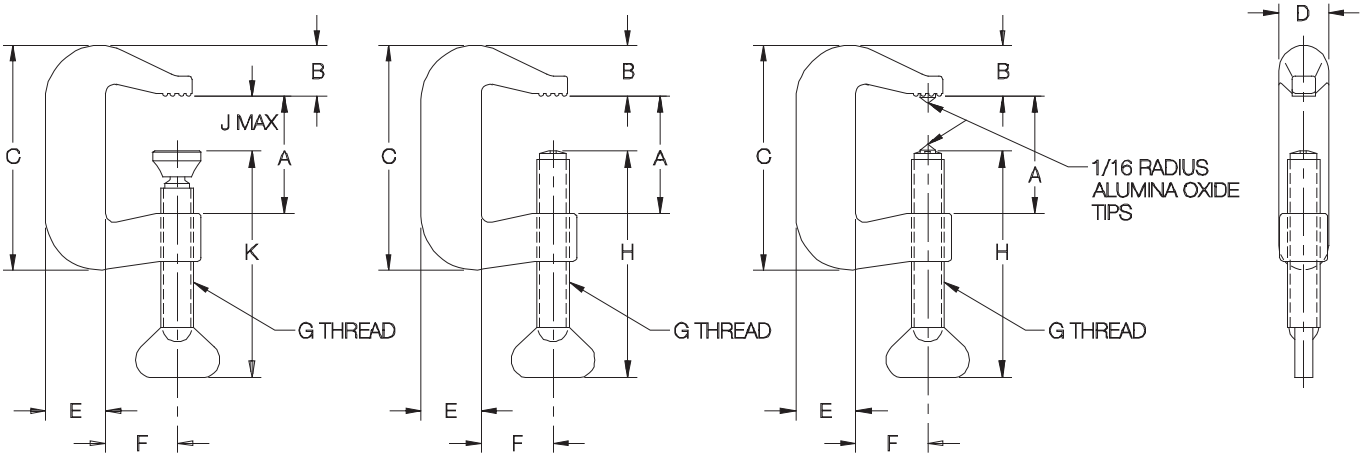

Swivel Pad **Radius Screw** **Alumina Oxide Tips**

PART NO. WITH SWIVEL PAD	PART NO. WITH RADIUS SCREW	PART NO. WITH ALUMINA OXIDE TIPS	A	B	C	D	E	F	G	H	J	K	MAXIMUM TORQUE (IN-LBS)	WEIGHT (LBS)
CL-318-DCS	CL-318-DC	CL-318-DC2T	1-3/16	3/4	2-3/4	13/16	29/32	25/32	9/16-12	2-13/16	3/4	3	125	.13
CL-476-DCS	CL-476-DC	CL-476-DC2T	1-13/16	1-1/8	3-15/16	1	1	1-3/16	5/8-12	3-13/16	1-3/8	4	160	.24
CL-635-DCS	CL-635-DC	—	2-3/8	1-1/4	4-27/32	1-1/16	1-1/4	1-1/2	11/16-11	4-3/4	1-7/8	4-3/4	250	.35
CL-1016-DCS	CL-1016-DC	—	3-7/8	1-3/8	6-13/16	1-1/4	1-1/2	1-3/4	13/16-10	6-1/4	3-3/8	6-1/4	350	.71

CarrLane®
MANUFACTURING CO.
4200 Carr Lane Ct., P.O. Box 191970
St. Louis, Missouri 63119-7970 USA
Phone: 314-647-6200, FAX: 314-647-5736
Web Site: www.carrlane.com

(Rev. 4-08)

SWING C CLAMPS

FRAME & MOUNTING PAD: MILD STEEL, ZINC PLATED CLEAR CHROMATE
KNOB: 319 ALUMINUM ALLOY
SCREW: 12L14 STEEL, NICKEL PLATED
FOOT: 12L14 STEEL, ZINC PLATED YELLOW CHROMATE

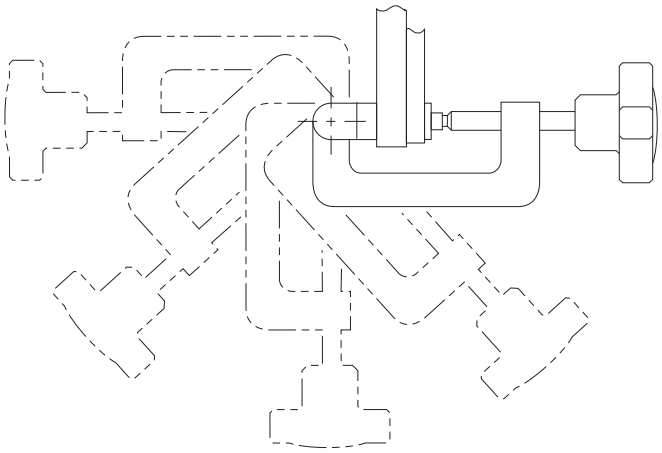

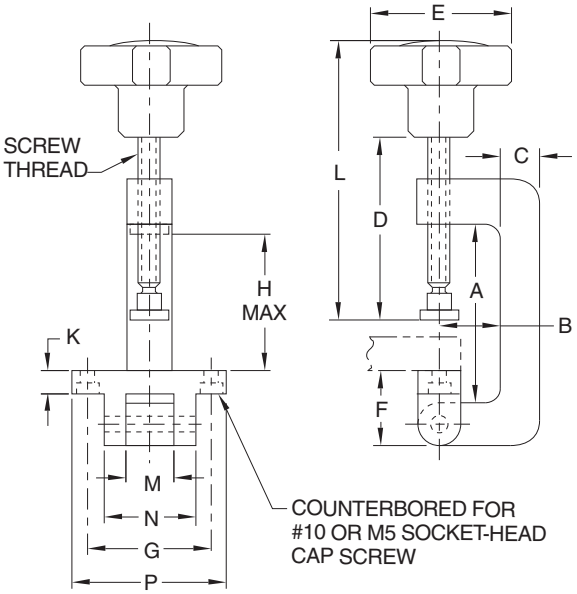

These unique C clamps have a hinged pad for fastening permantently to a fixture, allowing them to swing clear for workpiece loading. The hinged mounting pad bolts to the fixture with two socket-head cap screws. Four-prong knob provides a firm grip for applications requiring quick tightening and high torque. Clamping screw is cast securely in the knob and has a removable swivel foot. Available in four sizes.

Swing C Clamps use our patented left-hand-thread swivel-foot system. The ball end of the body screws into the foot for easy installation and removal. Once the ball threads pass beyond the foot threads, the foot can rotate and pivot freely (20° total angle). Foot threads are left-hand to positively prevent accidental black out during use. For other foot types, including Delrin® feet, see Feet for Swivel Screws (order separately).

PART NO.	SCREW THREAD	A	B	C	D	E	F	G	H	K	L	M	N	P
CL-520-SCC	5/16-18	2	3/4	1/2	2-1/4	1-3/4	7/8	1-1/2	1-15/32	5/16	3-1/4	1/2	1	2
CL-525-SCC		2-1/2							1-31/32					
CL-625-SCC	3/8-16	2-1/2	1	5/8	2-13/16	2-1/8	1	1-3/4	1-15/16	5/16	4-1/16	5/8	1-1/4	2-1/4
CL-635-SCC		3-1/2			3-9/16				2-15/16		4-13/16			

CarrLane®
MANUFACTURING CO.
4200 Carr Lane Ct., P.O. Box 191970
St. Louis, Missouri 63119-7970 USA
Phone: 314-647-6200, FAX: 314-647-5736
Web Site: www.carrlane.com

(Rev. 7-08)

SHARK CLAMPS

NEW!

BODY: STEEL, ZINC PLATED CLEAR CHROMATE
CLAMPING SCREW: STEEL, COPPER PLATED

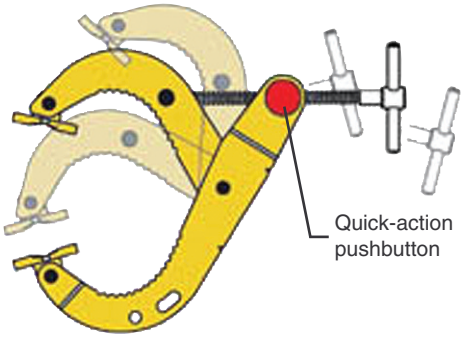

Heavy-duty quick-acting jaw clamp. Simply press the side pushbutton to allow sliding the handle freely in and out. The clamping screw is copper plated to resist spatter in welding applications. The two pivoting contact pads have mounting holes to allow attaching custom clamping pads or for stationary mounting. Optional no-mar rubber pads are available separately. Choose either a T handle (for maximum tightening torque) or a screwdriver-type straight handle (for more comfortable handling). Available in two sizes. Patent no. 6,893,012.

To clamp, simply press the quick-action pushbutton to slide the handle forward, moving the jaws into clamping position, then release the button and turn the handle to apply clamping force. To unclamp, turn the handle to release clamping force, then press the pushbutton to slide the handle back.

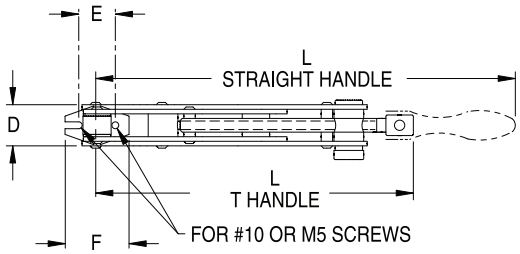

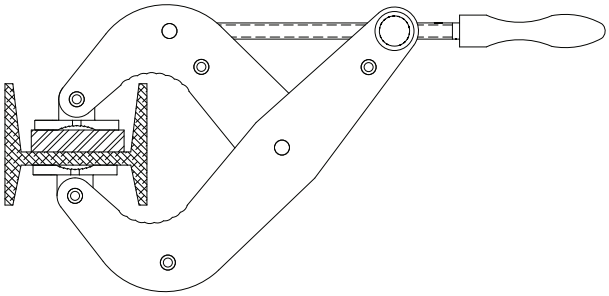

Wide throat allows clamping over flanges

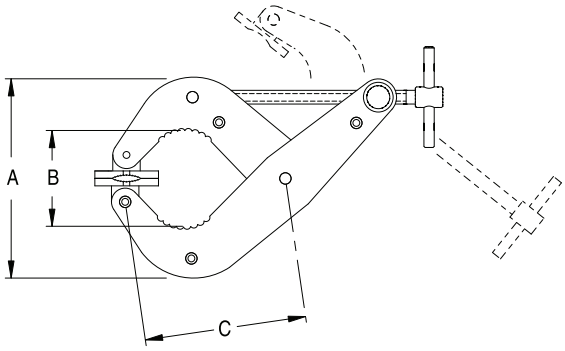

PART NO.	MAX OPENING	HANDLE TYPE	A	B	C	D	E	F	L	MAXIMUM CLAMPING FORCE (LBS)	NO-MAR PADS (SET OF 4)
CL-500-SHRK	5	T	5.50	2.64	4.40	1.12	1.00	1.75	8.5	1000	CL-1-SHRK-P-SETOF4
CL-501-SHRK		STRAIGHT							12	200	
CL-650-SHRK	6-1/2	T	6.00	3.15	5.30	1.12	1.00	1.75	10.5	1000	
CL-651-SHRK		STRAIGHT							14	200	

Carr Lane®
MANUFACTURING CO.
4200 Carr Lane Ct., P.O. Box 191970
St. Louis, Missouri 63119-7970 USA
Phone: 314-647-6200, FAX: 314-647-5736
Web Site: www.carrlane.com

(Rev. 12-07)

HANDSCREW CLAMPS

HARD MAPLE CLAMPING JAWS, OIL FINISH
STEEL SPINDLES AND BEARING NUTS, ZINC PLATED CLEAR CHROMATE
HARDWOOD HANDLES, WITH STEEL FERRULES, ZINC PLATED CLEAR CHROMATE

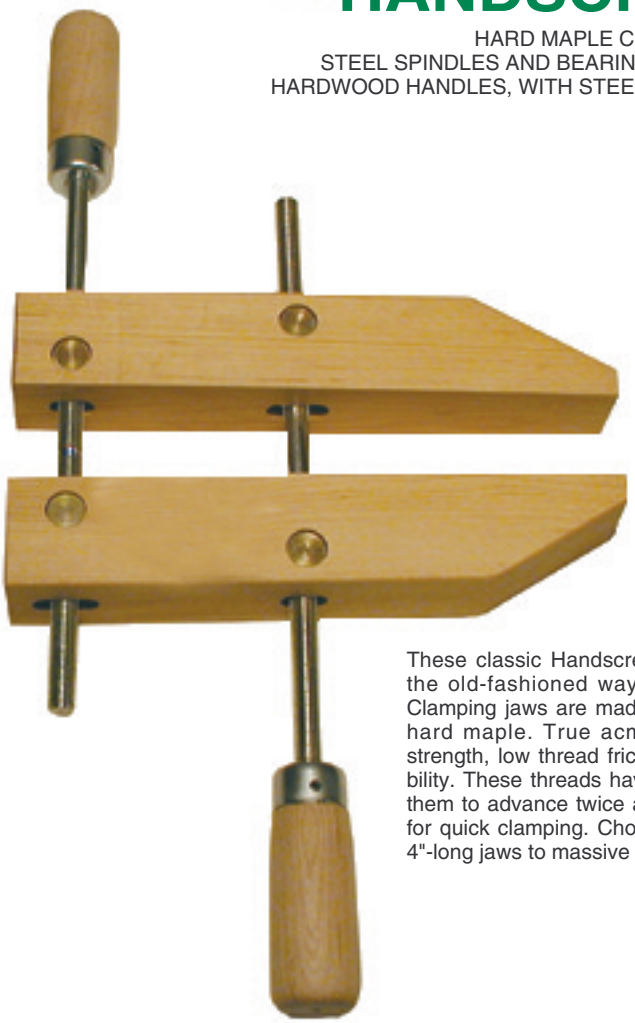

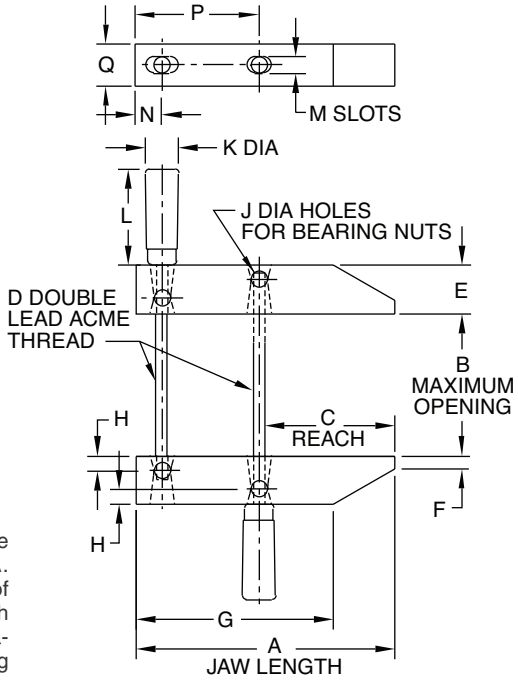

These classic Handscrew Clamps are still made the old-fashioned way, still made in the USA. Clamping jaws are made from the finest grade of hard maple. True acme threads provide high strength, low thread friction, and excellent wearability. These threads have a double lead, allowing them to advance twice as fast as regular threads, for quick clamping. Choice of five sizes, from tiny 4"-long jaws to massive 12"-long jaws.

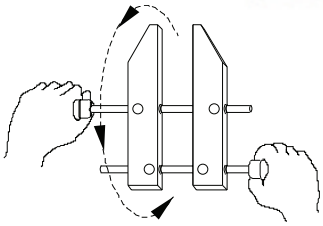

Step 1

Handscrew Clamps adjust very quickly. Starting with the jaws parallel, grasp the two handles and rotate the clamp (much like pedalling a bicycle) until the jaws are open just barely wide enough for the thickness to be clamped.

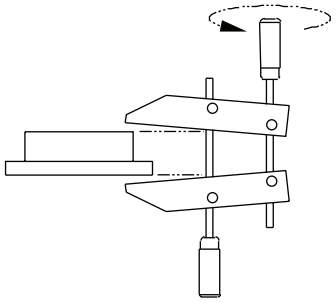

Step 2

Leaving the center spindle stationary, turn the rear spindle counterclockwise to open the clamping jaws slightly wider in front. Slide clamp over the surface to be gripped.

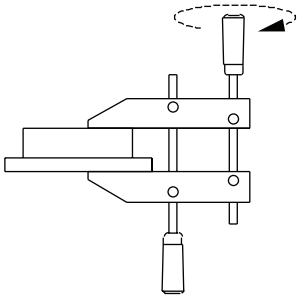

Step 3

Again leaving the center spindle stationary, turn the rear spindle clockwise to tighten. The clamping jaws should now be parallel.

PART NO. SINGLE CLAMP	PART NO. SET OF 6 CLAMPS	A	B	C	D ACME THREAD	E	F	G	H	J DIA	K DIA	L	M	N	P	Q
CL-4-HSC	CL-4-HSC-SETOF6	4	2-1/4	2	1/4	1-1/16	1/2	3-1/8	3/8	25/64	7/8	2-1/2	9/32	9/16	1-7/8	1-1/16
CL-6-HSC	CL-6-HSC-SETOF6	6	3	3	5/16	1-3/8	1/2	4-5/16	7/16	33/64	1	3	11/32	3/4	2-27/32	1-1/4
CL-8-HSC	CL-8-HSC-SETOF6	8	5	4	7/16	1-3/4	1/2	5-7/8	9/16	41/64	1-1/4	3-11/16	15/32	1	3-23/32	1-1/2
CL-10-HSC	CL-10-HSC-SETOF6	10	7	5		1-7/8	9/16	7-3/4						1-1/4	4-23/32	1-5/8
CL-12-HSC	CL-12-HSC-SETOF6	12	9-1/4	6		2-1/8	5/8	9	5/8					1-7/16	5-25/32	1-7/8

CarrLane®
MANUFACTURING CO.
4200 Carr Lane Ct., P.O. Box 191970
St. Louis, Missouri 63119-7970 USA
Phone: 314-647-6200, FAX: 314-647-5736
Web Site: www.carrlane.com

(Rev. 7-10)

CAM BAR CLAMPS

HARD MAPLE CLAMPING JAWS AND CAM, LACQUER FINISH
CORK FACE ON CLAMPING JAWS
SPRING STEEL BAR, ZINC PLATED CLEAR CHROMATE

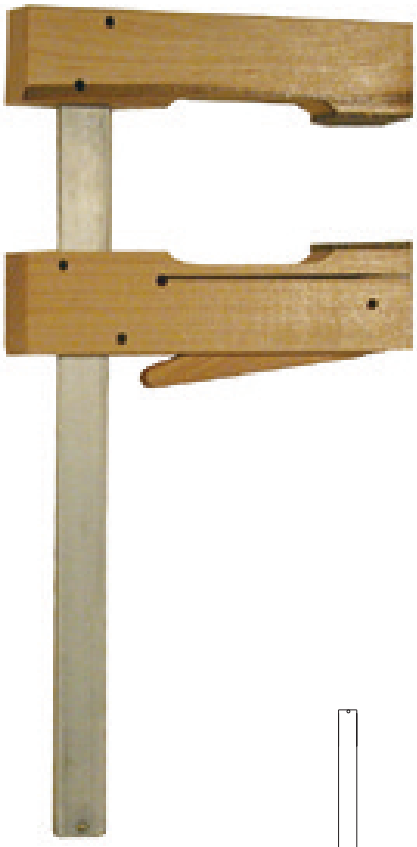

These classic bar clamps slide quickly into position, then apply clamping force using a cam. Made in the USA with high-quality materials and workmanship. Clamping jaws are made from the finest grade of hard maple. The rugged spring steel bar has serrations on both sides, to engage steel roll pins in the sliding jaw. Clever bar design keeps the sliding jaw in position by its own weight, so that the clamp can be drawn up and tightened with one hand. Cork padding on the clamping jaws avoids damaging your work and helps prevent the clamp from slipping. Available with 4-1/2" and 6" jaw reach, with clamp openings up to 24".

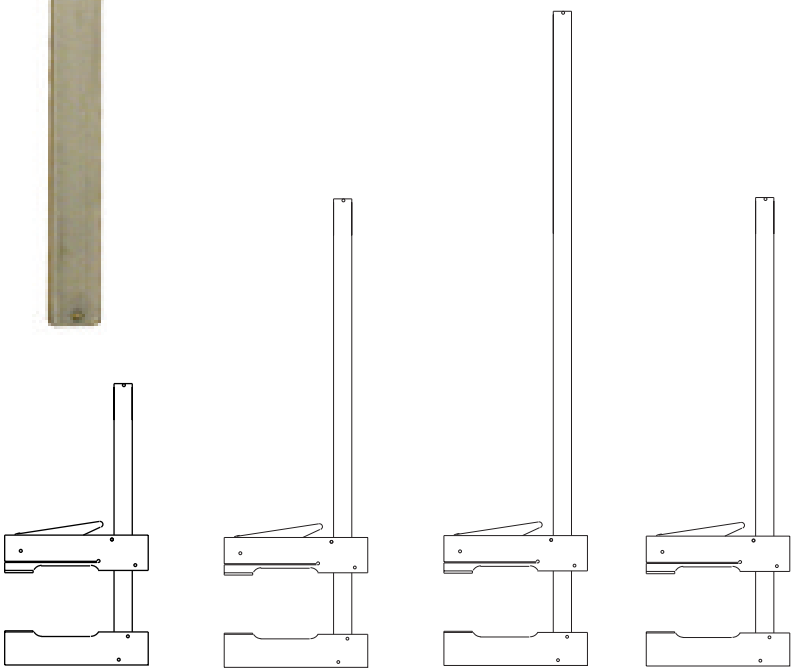

6" jaw (4-1/2" reach) 8" opening

6" jaw (4-1/2" reach) 16" opening

6" jaw (4-1/2" reach) 24" opening

7-1/2" jaw (6" reach) 8" opening

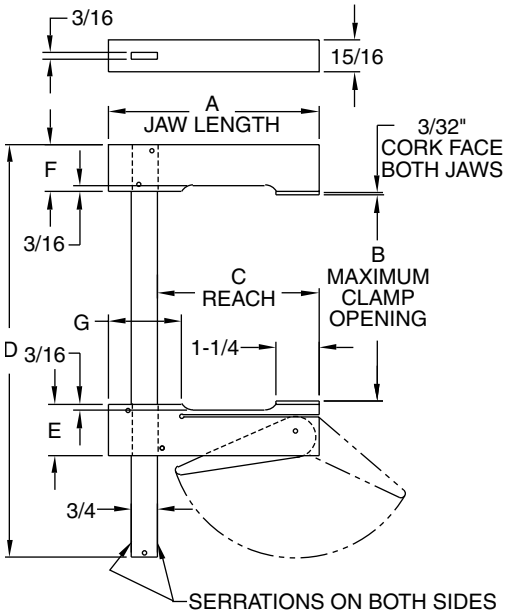

PART NO. SINGLE CLAMP	PART NO. SET OF 6 CLAMPS	A	B	C REACH	D	E	F	G	MAXIMUM CAM RISE
CL-48-CBC	CL-48-CBC-SETOF6	6	8	4-1/2	12	1-1/2	1-3/8	2-1/4	1/4
CL-416-CBC	CL-416-CBC-SETOF6		16		20				
CL-424-CBC	CL-424-CBC-SETOF6		24		28				
CL-68-CBC	CL-68-CBC-SETOF6	7-1/2	8	6	12	1-1/2	1-3/8		

Carr Lane®
MANUFACTURING CO.
4200 Carr Lane Ct., P.O. Box 191970
St. Louis, Missouri 63119-7970 USA
Phone: 314-647-6200, FAX: 314-647-5736
Web Site: www.carrlane.com

(Rev. 8-10)

FORGED ADJUSTABLE DRILL-PRESS CLAMPS

NEW!

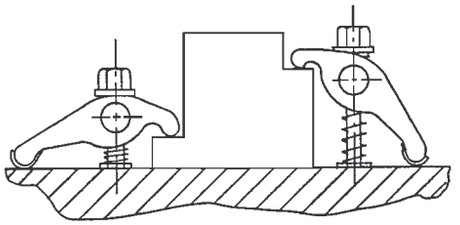

Handy hold-down clamp assembly that includes a Forged Adjustable Clamp, ideal for clamping on T-slotted drill presses and tapped drill-jig plates. This rugged forged steel pivot clamp provides instant height adjustment without blocks or shims. Removable brass heel protects machine table. Available with stud sizes from 5/16-18 to 1/2-13 (M8 to M12 in metric), fitting T-slots from 3/8 to 3/4 (10mm to 18mm in metric). For additional sizes of Forged Adjustable Clamps, see page 179.

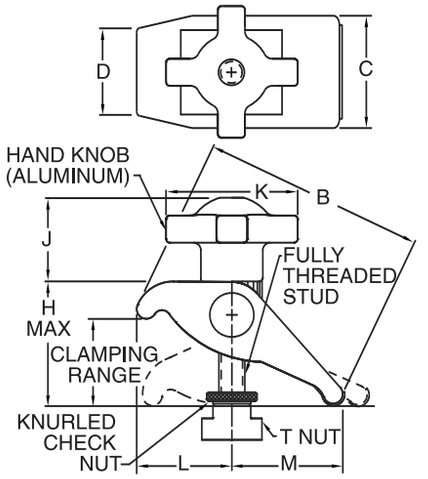

GENERAL DIMENSIONS

STUD SIZE	CLAMPING RANGE	B	C	D	H	J	K	L		M	
								MIN	MAX	MIN	MAX
5/16-18 or M8	0 to 1-3/4	3-1/4	1-1/4	7/8	2-1/8	1-3/8	2-1/8	1-1/16	1-1/4	1-3/4	2
3/8-16 or M10											
1/2-13 or M12	0 to 2/16	4	1-5/8	1-1/8	2-5/8	1-5/8	2-1/2	1-3/8	1-9/16	2-1/8	2-7/16

ASSEMBLY COMPONENTS (USA)

PART NO.	STUD SIZE	TABLE-SLOT SIZE	T NUT	FORGED ADJUSTABLE CLAMP	FULLY THREADED STUD	KNURLED CKECK NUT	HAND KNOB
CL-5-FACA-HKA	5/16-18	TAPPED	NONE	CL-6-FAC	CL-5/16-18x3.00-FTS	CL-51618-TSJN	CL-2-HK-4A
CL-5-FACA-HKA-19		3/8 or 10mm	CL-19-TN				
CL-5-FACA-HKA-20		7/16	CL-20-TN				
CL-5-FACA-HKA-21		1/2	CL-21-TN				
CL-6-FACA-HKA	3/8-16	TAPPED	NONE	CL-6-FAC	CL-3/8-16x3.00-FTS	CL-3816-TSJN	CL-3-HK-4A
CL-6-FACA-HKA-00		7/16	CL-00-TN				
CL-6-FACA-HKA-12		12mm	CL-12-TN				
CL-6-FACA-HKA-0		1/2	CL-0-TN				
CL-6-FACA-HKA-1		9/16 or 14mm	CL-1-TN				
CL-6-FACA-HKA-16		5/8 or 16mm	CL-16-TN				
CL-8-FACA-HKA	1/2-13	TAPPED	NONE	CL-8-FAC	CL-1/2-13x4.00-FTS	CL-1213-TSJN	CL-9-HK-9A
CL-8-FACA-HKA-9		9/16 or 14mm	CL-9-TN				
CL-8-FACA-HKA-2		5/8 or 16mm	CL-2-TN				
CL-8-FACA-HKA-3		11/16 or 18mm	CL-3-TN				
CL-8-FACA-HKA-17		3/4	CL-17-TN				

ASSEMBLY COMPONENTS (METRIC)

CLM-5-FACA-HKA	M8	TAPPED	NONE	CL-6-FAC	CLM-8x80-FTS	CLM-8-TSJN	CLM-2-HK-4A
CLM-5-FACA-HKA-19		3/8 or 10mm	CLM-19-TN				
CLM-6-FACA-HKA	M10	TAPPED	NONE	CL-6-FAC	CLM-10x80-FTS	CLM-10-TSJN	CLM-3-HK-4A
CLM-6-FACA-HKA-00		12mm	CLM-00-TN				
CLM-6-FACA-HKA-0		1/2	CLM-0-TN				
CLM-6-FACA-HKA-1		9/16 or 14mm	CLM-1-TN				
CLM-8-FACA-HKA	M12	TAPPED	NONE	CL-8-FAC	CLM-12x110-FTS	CLM-12-TSJN	CLM-9-HK-9A
CLM-8-FACA-HKA-9		9/16 or 14mm	CLM-9-TN				
CLM-8-FACA-HKA-2		5/8 or 16mm	CLM-2-TN				
CLM-8-FACA-HKA-3		11/16 or 18mm	CLM-3-TN				

Carr Lane MANUFACTURING CO.
4200 Carr Lane Ct., P.O. Box 191970
St. Louis, Missouri 63119-7970 USA
Phone: 314-647-6200, FAX: 314-647-5736
Web Site: www.carrlane.com

(Rev. 7-10)

DRILL-PRESS TOGGLE CLAMPS

NEW!

Vertical T Handle

DRILL-PRESS ADAPTOR: 6061 ALUMINUM
OTHER COMPONENTS: SEE CATALOG PAGE FOR EACH SPECIFIC ITEM

These hold-down toggle clamps are ideal for clamping on drill presses, with an adaptor base for slotted tables and a quick adjusting spindle. Choose either a compact, easy-opening vertical T handle, or a low-profile horizontal handle. Open arm provides adjustable spindle location. Supplied with two quick-adjusting flat-cushion spindles, one short and one long. Choose T nut size to fit table slots from 3/8 to 5/8" (10 to 16mm in metric).

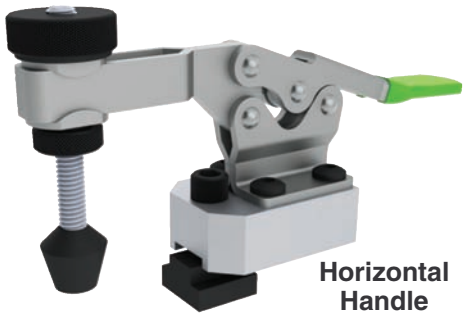

Horizontal Handle

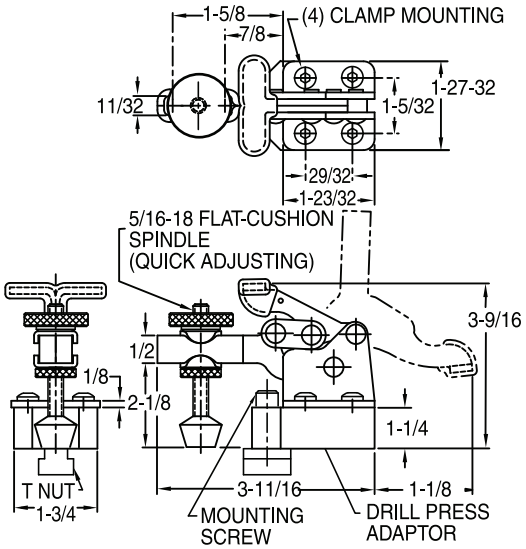

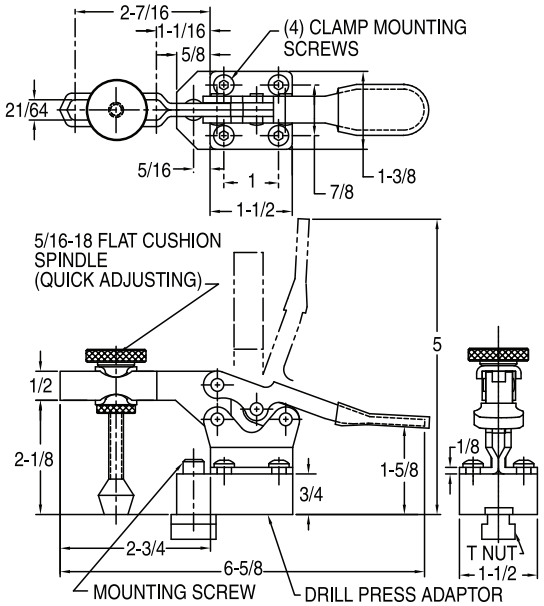

VERTICAL T HANDLE (USA)

PART NO.	MOUNTING SCREW SIZE	TABLE-SLOT SIZE	T NUT	DRILL-PRESS ADAPTOR	MOUNTING SCREW	CLAMP MOUNTING SCREW(4)	QUICK-ADJUSTING SPINDLE	HOLDING CAPACITY (LBS)
CL-300-VTCD-5	5/16-18	TAPPED	NONE	CL-300-VTCA-6	CL-5/16-18x1.75-SHCS	CL-1/4-20x.50-SHCS	CL-516212-FCQA	350
CL-300-VTCD-5-19		3/8 or 10mm	CL-19-TN		CL-5/16-18x1.50-SHCS			
CL-300-VTCD-5-20		7/16	CL-20-TN					
CL-300-VTCD-5-21		1/2	CL-21-TN					
CL-300-VTCD-6	3/8-16	TAPPED	NONE		CL-3/8-16x1.75-SHCS			
CL-300-VTCD-6-00		7/16	CL-00-TN		CL-3/8-16x1.50-SHCS			
CL-300-VTCD-6-12		12mm	CL-12-TN					
CL-300-VTCD-6-0		1/2	CL-0-TN					
CL-300-VTCD-6-1		9/16 or 14mm	CL-1-TN					
CL-300-VTCD-6-16		5/8 or 16mm	CL-16-TN					

HORIZONTAL HANDLE (USA)

CL-450-HTCD-5	5/16-18	TAPPED	NONE	CL-450-HTCA-6	CL-5/16-18x1.75-SHCS	CL-1/4-20x.50-SHCS	CL-516212-FCQA	500
CL-450-HTCD-5-19		3/8 or 10mm	CL-19-TN		CL-5/16-18x1.50-SHCS			
CL-450-HTCD-5-20		7/16	CL-20-TN					
CL-450-HTCD-5-21		1/2	CL-21-TN					
CL-450-HTCD-6	3/8-16	TAPPED	NONE		CL-3/8-16x1.75-SHCS			
CL-450-HTCD-6-00		7/16	CL-00-TN		CL-3/8-16x1.50-SHCS			
CL-450-HTCD-6-12		12mm	CL-12-TN					
CL-450-HTCD-6-0		1/2	CL-0-TN					
CL-450-HTCD-6-1		9/16 or 14mm	CL-1-TN					
CL-450-HTCD-6-16		5/8 or 16mm	CL-16-TN					

Carr Lane®
MANUFACTURING CO.
4200 Carr Lane Ct., P.O. Box 191970
St. Louis, Missouri 63119-7970 USA
Phone: 314-647-6200, FAX: 314-647-5736
Web Site: www.carrlane.com

(Rev. 12-07)

CARR LANE SIMPLEX HAMMERS

SEE COMPONENT PAGES FOR MATERIAL SPECIFICATIONS

Wooden Handle

Fibreglass Handle

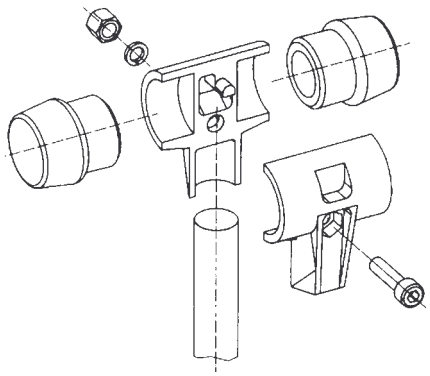

Design your own custom hammers. These soft-face mallets can be customized for specific applications by selecting the proper hammer inserts. Choose the same type of insert for both sides, or build a multi-purpose hammer with a different type of insert for each face. The Simplex system uses a patented hammer housing with 3-point clamping that ensures a safe hammer assembly.

Available in four sizes, with a choice of eight different insert materials:
Type A Blue Thermoplastic (Soft)
Type B Gray Thermoplastic (Medium Soft)
Type C Black Rubber (Medium Soft)
Type D White Superplastic (Medium Hard)
Type E Red Plastic (Hard)
Type F White Nylon (Hard)
Type G Soft Metal (Hard)
Type H Copper (Hard) Fiberglass Handle Only

To order a 30mm hammer with a wooden handle, one black rubber insert (C) and one white nylon insert (F) specify:
CL-30-SPH-W-CF

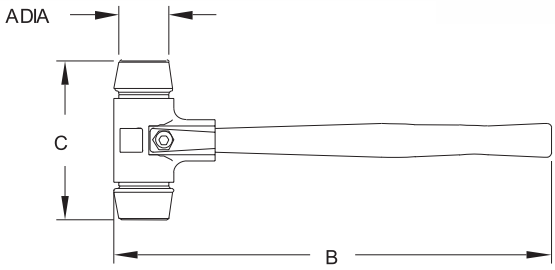

SIMPLEX HAMMER ASSEMBLY — WOODEN HANDLE

PART NO.	A DIA	B	C	WEIGHT (LBS)
CL-30-SPH-W-xx	30mm (1.18)	11.81	3.54	0.7-0.9
CL-40-SPH-W-xx	40mm (1.57)	12.99	4.33	1.3-1.6
CL-50-SPH-W-xx	50mm (1.96)	13.78	5.32	2.4-3.0
CL-60-SPH-W-xx	60mm (2.36)	15.95	5.71	3.1-4.3

SIMPLEX HAMMER ASSEMBLY — FIBERGLASS HANDLE

CL-30-SPH-F-xx	30mm (1.18)	11.81	3.54	0.9-1.5
CL-40-SPH-F-xx	40mm (1.57)	12.99	4.33	1.8-3.1
CL-50-SPH-F-xx	50mm (1.96)	13.78	5.32	3.3-4.0
CL-60-SPH-F-xx	60mm (2.36)	15.95	5.71	3.5-5.5

Observe all appropriate safety precautions. Always wear safety goggles when using a hammer or any striking tool. Bystanders must also wear safety goggles. Never strike the hammer with or against another striking tool, hardened nail, or any other hard object that could cause damage. Chipping could occur, resulting in possible eye or other injury. Discard any chipped or damaged hammer. If assembling the hammer yourself, ensure that all parts are properly fitted into the handle housing and that the screw is tightened to the specified torque. Check hammer before each use. Using a hammer with loose or improperly fitted parts could result in serious injury. Use only genuine Simplex replacement components.

Carr Lane®
MANUFACTURING CO.
4200 Carr Lane Ct., P.O. Box 191970
St. Louis, Missouri 63119-7970 USA
Phone: 314-647-6200, FAX: 314-647-5736
Web Site: www.carrlane.com

(Rev. 12-07)

CARR LANE SIMPLEX HAMMERS

Type A Inserts
Blue Thermoplastic
(Soft)

Blue thermoplastic inserts are soft and non-smudging. Applications include assembly operations, dent removal, woodworking, furniture assembly, window and door construction, joiner's work, and floor tiling. Hardness 60-70 Shore A.

PART NO.	HAMMER SIZE (FACE DIA)
CL-30-SPH-A	30mm (1.18)
CL-40-SPH-A	40mm (1.57)
CL-50-SPH-A	50mm (1.96)
CL-60-SPH-A	60mm (2.36)

Type C Inserts
Black Rubber
(Medium Soft)

Black Rubber inserts are medium soft. Applications include assembly operations, dent removal, prefabricated housing construction, carpenter's work, paving, masonry work, concrete-form setup, scaffold construction, gardening, landscaping, and interior construction. Hardness 90-100 Shore A.

PART NO.	HAMMER SIZE (FACE DIA)
CL-30-SPH-C	30mm (1.18)
CL-40-SPH-C	40mm (1.57)
CL-50-SPH-C	50mm (1.96)
CL-60-SPH-C	60mm (2.36)

Type E Inserts
Red Plastic
(Hard)

Red plastic inserts (cellulose acetate) are hard, semi-transparent, and grease & oil resistant. Applications include automotive assembly and repair work, sheet metal working, dent removal, concrete-form setup, and scaffold construction. Hardness 65-75 Shore D.

PART NO.	HAMMER SIZE (FACE DIA)
CL-30-SPH-E	30mm (1.18)
CL-40-SPH-E	40mm (1.57)
CL-50-SPH-E	50mm (1.96)
CL-60-SPH-E	60mm (2.36)

Type G Inserts
Soft Metal
(Hard)

Soft metal inserts are made of an aluminum-copper alloy which is hard and resistant to heat. Excellent alternative to old-fashioned lead hammers, to eliminate the risk of lead contamination. Applications include metalworking, tooling, automotive assembly and repair work, straightening work, car body work, and mold construction.

PART NO.	HAMMER SIZE (FACE DIA)
CL-30-SPH-G	30mm (1.18)
CL-40-SPH-G	40mm (1.57)
CL-50-SPH-G	50mm (1.96)
CL-60-SPH-G	60mm (2.36)

Type B Inserts
Grey Thermoplastic
(Medium Soft)

Gray thermoplastic inserts are medium soft and non-smudging. Applications include assembly operations, car-body work, woodworking, furniture assembly, window and door construction, joiner's work, floor tiling, paving, and interior construction. Hardness 85-95 Shore A.

PART NO.	HAMMER SIZE (FACE DIA)
CL-30-SPH-B	30mm (1.18)
CL-40-SPH-B	40mm (1.57)
CL-50-SPH-B	50mm (1.96)
CL-60-SPH-B	60mm (2.36)

Type D Inserts
White Superplastic
(Medium Hard)

White superplastic inserts (UHMW polyethylene) are medium hard, durable, impact resistant, acid and lye resistant, grease and oil resistant, and ideal for striking sharp edges. Applications include assembly operations, automotive assembly and repair work, repair and maintenance work, car body work, sheet metal working, dent removal, assembly of sharp-edged workpieces, paving, masonry work, scaffold construction, gardening, and landscaping. Hardness 60-70 Shore D.

PART NO.	HAMMER SIZE (FACE DIA)
CL-30-SPH-D	30mm (1.18)
CL-40-SPH-D	40mm (1.57)
CL-50-SPH-D	50mm (1.96)
CL-60-SPH-D	60mm (2.36)

Type F Inserts
White Nylon
(Hard)

White nylon inserts are hard, grease and oil resistant, highly elastic, and have superior strike effectiveness. Applications include assembly operations, metalworking, tooling, automotive assembly and repair work, joining of workpieces, sheet metal working, dent removal, mold construction, assembly of sharp-edged workpieces, and scaffold construction. Hardness 68-78 Shore D.

PART NO.	HAMMER SIZE (FACE DIA)
CL-30-SPH-F	30mm (1.18)
CL-40-SPH-F	40mm (1.57)
CL-50-SPH-F	50mm (1.96)
CL-60-SPH-F	60mm (2.36)

Type H Inserts
Copper
(Hard)

Copper inserts are hard and provide maximum impact. Plastic socket provides for secure mounting of the copper insert in the hammer. Applications include machine construction, automotive assembly and repair work, repair and maintenance work, and vehicle service stations.

PART NO.	HAMMER SIZE (FACE DIA)
CL-30-SPH-H	30mm (1.18)
CL-40-SPH-H	40mm (1.57)

Carr Lane®
MANUFACTURING CO.
4200 Carr Lane Ct., P.O. Box 191970
St. Louis, Missouri 63119-7970 USA
Phone: 314-647-6200, FAX: 314-647-5736
Web Site: www.carrlane.com

(Rev. 12-07)

CARR LANE
SIMPLEX HAMMERS

HOUSINGS: CAST IRON, FURNISHED WITH SOCKET-HEAD CAP SCREW, SPRING WASHER, AND NUT
HANDLES: EUROPEAN BLACK LOCUST WOOD, OR FIBERGLASS WITH ERGONOMIC RUBBER GRIP

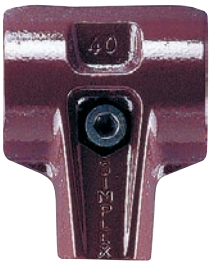

Rugged cast iron housing (red), furnished with a high-strength socket-head cap screw, spring washer, and nut. Premium quality hardwood handle. Use wooden handles only with red housings.

HOUSING & HANDLE — WOODEN HANDLE

HOUSING PART NO.	HANDLE PART NO.	HAMMER SIZE (FACE DIA)	TIGHTENING TORQUE (FT-LBS)	
			PLASTIC INSERTS	METAL INSERTS
CL-30-SPH-HWH	CL-30-SPH-WH	30mm (1.18)	11	15
CL-40-SPH-HWH	CL-40-SPH-WH	40mm (1.57)	18	30
CL-50-SPH-HWH	CL-50-SPH-WH	50mm (1.96)	22	37
CL-60-SPH-HWH	CL-60-SPH-WH	60mm (2.36)	30	48

Heavy-duty cast iron housing (black), reinforced for use with a fiberglass handle, furnished with a high-strength socket-head cap screw, spring washer, and nut. High-strength fiberglass handle with an ergonomic rubber grip. Use fiberglass handles only with black housings.

HOUSING & HANDLE — FIBERGLASS HANDLE

HOUSING PART NO.	HANDLE PART NO.	HAMMER SIZE (FACE DIA)	TIGHTENING TORQUE (FT-LBS)	
			PLASTIC INSERTS	METAL INSERTS
CL-30-SPH-HFH	CL-30-SPH-FH	30mm (1.18)	18	30
CL-40-SPH-HFH	CL-40-SPH-FH	40mm (1.57)	22	44
CL-50-SPH-HFH	CL-50-SPH-FH	50mm (1.96)	30	52
CL-60-SPH-HFH	CL-60-SPH-FH	60mm (2.36)	44	59

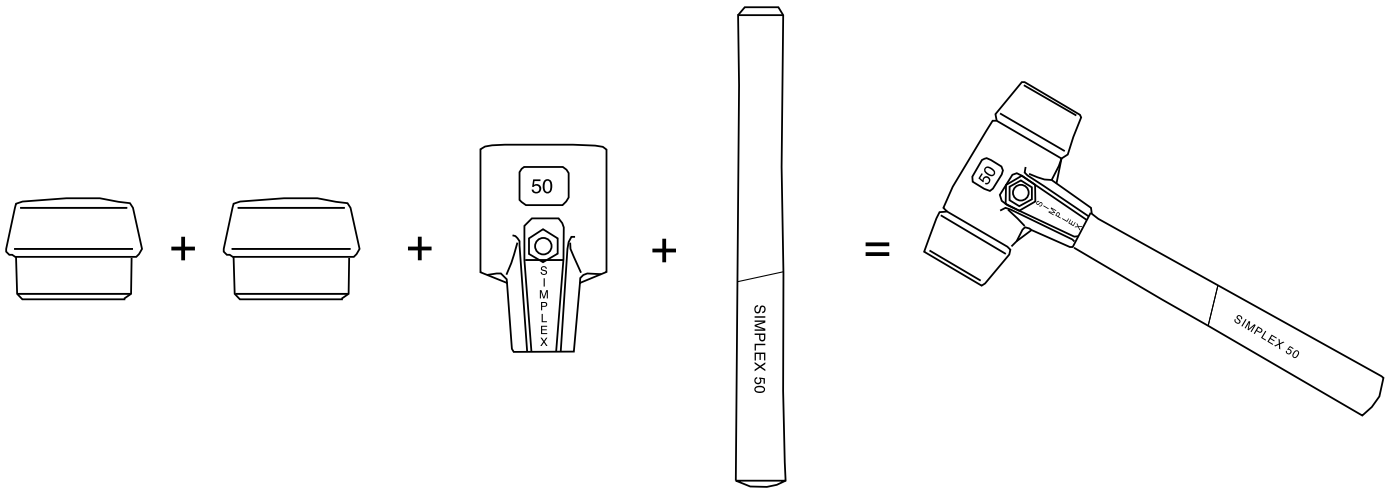

Insert **Insert** **Housing** **Handle** **Hammer Assembly**

Carr Lane®
MANUFACTURING CO.
4200 Carr Lane Ct., P.O. Box 191970
St. Louis, Missouri 63119-7970 USA
Phone: 314-647-6200, FAX: 314-647-5736
Web Site: www.carrlane.com

(Rev. 12-07)

NO-REBOUND HAMMERS

HOUSINGS: STEEL ASSEMBLY CONTAINING STEEL PELLETS. HANDLE: HICKORY WOOD.
INSERTS: NYLON, NATURAL WHITE COLOR, HARDNESS 68-78 SHORE D

Supercraft Hammers (Wooden Handle)

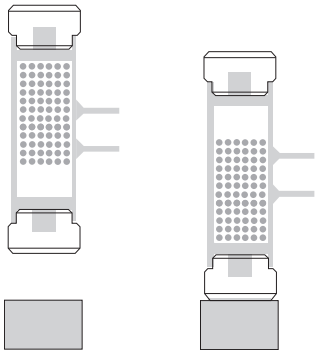

No-Rebound Hammers are filled with special steel pellets that transfer momentum to the impact point.

No-Rebound Hammers deliver full impact, about 50% greater than a standard hammer. The housing is filled with special steel pellets that transfer momentum to the impact point. Ideal for assembling machine parts without damage. Speeds up work while reducing fatigue. Allows better hammer control by absorbing the bounce. Hickory-wood handle. Available in five standard sizes, plus two sledgehammer sizes.

Supercraft No-Rebound Hammers have replaceable nylon inserts. These nylon inserts are hard, grease and oil resistant, highly elastic, and have superior strike effectiveness. Applications include assembly operations, metalworking, tooling, positioning of workpieces, automotive assembly and repair work, joining of workpieces, sheet metal working, dent removal, mold construction, assembly of sharp-edged workpieces, and scaffold construction.

Observe all appropriate safety precautions. Never allow the hammer's striking faces to wear down to the point where the hammer housing makes contact with the work surface, as irreparable damage could result. Always wear safety goggles when using a hammer or any striking tool. Bystanders must also wear safety goggles. Never strike the hammer with or against another striking tool, hardened nail, or any other hard object that could cause damage. Chipping could occur, resulting in possible eye or other injury. Discard any chipped or damaged hammer.

SUPERCRAFT HAMMERS — WOODEN HANDLE

PART NO.	FACE DIA	WEIGHT (LBS)	OVERALL LENGTH	HEAD LENGTH	REPLACEMENT INSERT (2 REQUIRED)
CL-3366-020-NRH	20mm (.78)	0.5	11.77	4.12	CL-3508-020-NRHI
CL-3366-030-NRH	30mm (1.18)	0.7	12.95	4.32	CL-3508-030-NRHI
CL-3366-040-NRH	40mm (1.57)	1.6	14.13	4.51	CL-3508-040-NRHI
CL-3366-050-NRH	50mm (1.96)	2.2	14.52	4.71	CL-3508-050-NRHI
CL-3366-060-NRH	60mm (2.36)	3.8	14.52	5.69	CL-3508-060-NRHI

Supercraft Sledgehammers (Wooden Handle)

SUPERCRAFT SLEDGEHAMMERS — WOODEN HANDLE

PART NO.	FACE DIA	WEIGHT (LBS)	OVERALL LENGTH	HEAD LENGTH	REPLACEMENT INSERT (2 REQUIRED)
CL-3366-081-NRH	80mm (3.14)	9	34.5	7.85	CL-3508-080-NRHI
CL-3366-107-NRH	100mm (3.93)	15	39.2	8.24	CL-3508-100-NRHI

Carr Lane®
MANUFACTURING CO.
4200 Carr Lane Ct., P.O. Box 191970
St. Louis, Missouri 63119-7970 USA
Phone: 314-647-6200, FAX: 314-647-5736
Web Site: www.carrlane.com

(Rev. 12-07)

NO-REBOUND HAMMERS

HOUSING & HANDLE: STEEL ASSEMBLY CONTAINING STEEL PELLETS
SUPERCRAFT INSERTS: NYLON, NATURAL WHITE COLOR, HARDNESS 68-78 SHORE D
SECURAL INSERTS: POLYURETHANE, YELLOW

Supercraft Hammers (Steel Handle)

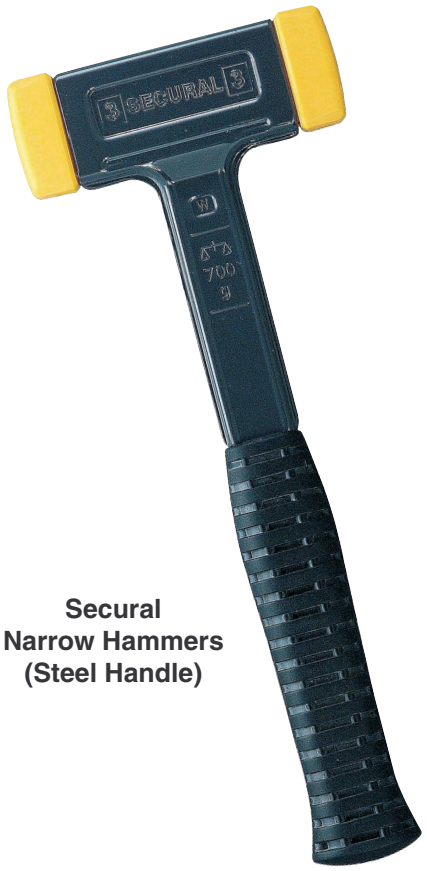

Secural Narrow Hammers (Steel Handle)

No-Rebound Hammers deliver full impact, about 50% greater than a standard hammer. The housing is filled with special steel pellets that transfer momentum to the impact point. Ideal for assembling machine parts without damage. Speeds up work while reducing fatigue. Allows better hammer control by absorbing the bounce. Steel handle with ergonomic rubber grip.

Supercraft No-Rebound Hammers are available in four sizes. Supercraft Hammers have replaceable nylon inserts. These nylon inserts are hard, grease and oil resistant, highly elastic, and have superior strike effectiveness.

Secural Narrow No-Rebound Hammers have a narrow, rectangular head that allows hammering in tight spots, and also makes storage easier in toolbox drawers. Available in one size, with a 30mm x 40mm face. Secural Narrow Hammers have replaceable polyurethane inserts. These inserts are medium soft.

Observe all appropriate safety precautions. Never allow the hammer's striking faces to wear down to the point where the hammer housing makes contact with the work surface, as irreparable damage could result. Always wear safety goggles when using a hammer or any striking tool. Bystanders must also wear safety goggles. Never strike the hammer with or against another striking tool, hardened nail, or any other hard object that could cause damage. Chipping could occur, resulting in possible eye or other injury. Discard any chipped or damaged hammer.

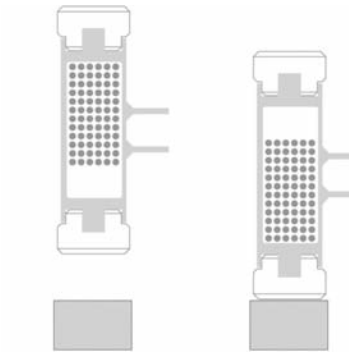

No-Rebound Hammers are filled with special steel pellets that transfer momentum to the impact point.

SUPERCRAFT HAMMERS — STEEL HANDLE

PART NO.	FACE DIA	WEIGHT (LBS)	OVERALL LENGTH	HEAD LENGTH	REPLACEMENT INSERT (2 REQUIRED)
CL-3377-030-NRH	30mm (1.18)	1.3	11.38	4.32	CL-3508-030-NRHI
CL-3377-040-NRH	40mm (1.57)	1.9	11.77	4.51	CL-3508-040-NRHI
CL-3377-050-NRH	50mm (1.96)	2.6	12.17	4.71	CL-3508-050-NRHI
CL-3377-060-NRH	60mm (2.36)	3.9	12.76	5.69	CL-3508-060-NRHI

SECURAL NARROW HAMMERS — STEEL HANDLE

PART NO.	FACE DIMENSIONS (RECTANGULAR)	WEIGHT (LBS)	OVERALL LENGTH	HEAD LENGTH	REPLACEMENT INSERT (2 REQUIRED)
CL-3380-040-NRH	30mm x 40mm (1.18 x 1.57)	1.6	11.77	4.59	CL-3511-040-NRHI

Carr Lane®
MANUFACTURING CO.
4200 Carr Lane Ct., P.O. Box 191970
St. Louis, Missouri 63119-7970 USA
Phone: 314-647-6200, FAX: 314-647-5736
Web Site: www.carrlane.com

(Rev. 12-07)

NO-REBOUND DROP HAMMERS

HOUSING: STEEL ASSEMBLY CONTAINING STEEL PELLETS
INSERTS: NYLON, NATURAL WHITE COLOR, HARDNESS 68-78 SHORE D

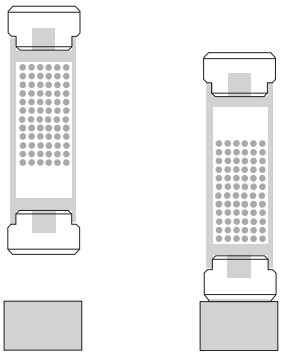

No-Rebound Drop Hammers are filled with special steel pellets that transfer momentum to the impact point.

No-Rebound Drop Hammers provide the impact of a normal hammer even when access is restricted. No-Rebound Hammers deliver full impact, about 50% greater than a standard hammer. The housing is filled with special steel pellets that transfer momentum to the impact point. Ideal for assembling machine parts without damage. Speeds up work while reducing fatigue. Allows better hammer control by absorbing the bounce. Available in four sizes .

No-Rebound Drop Hammers have replaceable nylon inserts. These nylon inserts are hard, grease and oil resistant, highly elastic, and have superior strike effectiveness. Applications include assembly operations, metalworking, tooling, positioning of workpieces, automotive assembly and repair work, joining of workpieces, sheet metal working, dent removal, mold construction, and assembly of sharp-edged workpieces.

PART NO.	FACE DIA	WEIGHT (LBS)	LENGTH	REPLACEMENT INSERT (2 REQUIRED)
CL-3408-020-NRH	20mm (.78)	0.5	5.89	CL-3508-020-NRHI
CL-3408-030-NRH	30mm (1.18)	1.0	6.08	CL-3508-030-NRHI
CL-3408-040-NRH	40mm (1.57)	1.8	6.28	CL-3508-040-NRHI
CL-3408-050-NRH	50mm (1.96)	2.8	6.48	CL-3508-050-NRHI

SOFT-FACE PUNCHES

HOUSING: STEEL. INSERTS: NYLON, NATURAL WHITE COLOR, HARDNESS 68-78 SHORE D

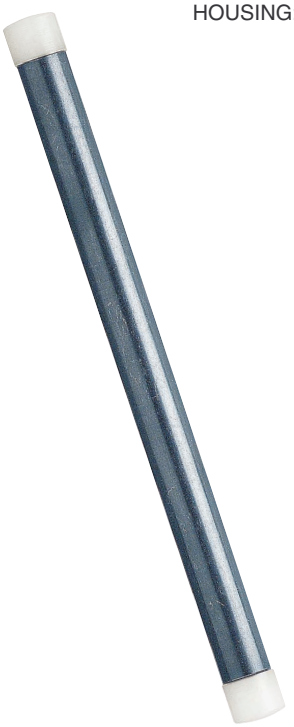

Soft-Face Punches safely extend the reach of a hammer when access is restricted. Transfers impact to difficult-to-reach places. Available in two sizes.

Soft-Face Punches have replaceable nylon inserts. These nylon inserts are hard, grease and oil resistant, highly elastic, and have superior strike effectiveness. Applications include assembly operations, metalworking, tooling, automotive assembly and repair work, joining of workpieces, sheet metal working, dent removal, and assembly of sharp-edged workpieces.

PART NO.	FACE DIA	WEIGHT (LBS)	LENGTH	REPLACEMENT INSERT (2 REQUIRED)
CL-3408-010-SFP	10mm (.39)	0.2	6.59	CL-3508-010-NRHI
CL-3408-015-SFP	15mm (.59)	0.4	6.87	CL-3508-015-NRHI

Carr Lane MANUFACTURING CO.
4200 Carr Lane Ct., P.O. Box 191970
St. Louis, Missouri 63119-7970 USA
Phone: 314-647-6200, FAX: 314-647-5736
Web Site: www.carrlane.com

(Rev. 12-07)

PLUG GAGES

52100 STEEL, HEAT TREATED RC 60-62

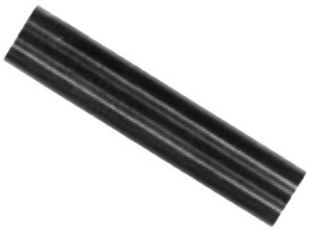

Durable, precision plug gages for production gaging. Available from stock in any size from .011 to 1.000 inches in .001 increments. Specify either PLUS or MINUS tolerance when ordering. In general, GO gages should have a PLUS tolerance, and NO-GO gages should have a MINUS tolerance. This keeps the gage's tolerance within the workpiece's tolerance at all times, and allows for wear of the GO gage. Plug Gages are also available in .0005 increments and in metric sizes, as specials.
Example:
CL-.2505P (.2505 inches, PLUS tolerance)
Plug gages are hardened and cold stablized. They are precision lapped to a 10-microinch surface finish, with ends ground square. Gage diameter is electro-etched on each pin. All gages are 2" long.

Ordering Example:

CL-.018M

- M = MINUS (+.0000 / –.0002)
- P = PLUS (+.0002 / –.0000)
- PIN DIA

PART NO.		SIZE RANGE
PLUS TOLERANCE	MINUS TOLERANCE	
CL-.xxxP	CL-.xxxM	.011-1.000

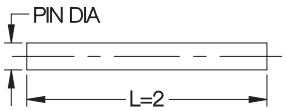

Checking hole sizes and depths

Checking hole locations

Checking distance between holes

Gaging slots

STEP PLUG GAGES

52100 STEEL, HEAT TREATED RC 60-62

Step Plug Gages allow checking GO and NO-GO tolerances simultaneously. The A diameter (NO-GO) is available in any size from .061 to 1.000 in .001 increments. The B diameter (GO) is custom ground to your tolerance range. See table for maximum diameter difference.

Ordering Example:

CL-.252M -.250P

- A DIA
- B DIA
- M = MINUS (+.0000 / –.0002)
- P = PLUS (+.0002 / –.0000)

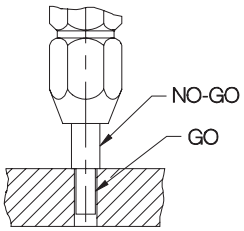

PART NO.	A DIA RANGE	MAXIMUM DIAMETER DIFFERENCE*	C
CL-.xxxx-.xxxx	.061 thru .100	.030	5/16
	.101 thru .200	.050	5/16
	.201 thru .350	.100	1/2
	.351 thru .500	.100	1/2
	.501 thru .625	.130	5/8
	.626 thru .750	.130	5/8
	.751 thru 1.000	.150	5/8

* B dia cannot be smaller than .058 inches.

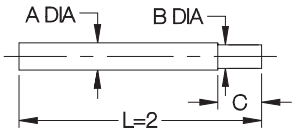

Carr Lane®
MANUFACTURING CO.
4200 Carr Lane Ct., P.O. Box 191970
St. Louis, Missouri 63119-7970 USA
Phone: 314-647-6200, FAX: 314-647-5736
Web Site: www.carrlane.com

(Rev. 12-07)

PLUG-GAGE SETS

SEE PAGE 250 FOR MATERIAL SPECIFICATIONS

Complete set of Plug Gages that contains a gage for every .001 increment within a given range. Protective case has a marked hole for each diameter. See below for Gage Handles and Bushings (not available for CL-0-G and CL-00-G sets).

SET PART NO.		SIZE RANGE	NO. OF GAGES	GAGE HANDLES REQUIRED			COLLET BUSHINGS REQUIRED
PLUS TOLERANCE	MINUS TOLERANCE			SINGLE END GO	SINGLE END NO-GO	DOUBLE END	
CL-00-G	CL-0-G	.011-.060	50	—	—	—	—
CL-3-G	CL-1-G	.061-.250	190	CL-1-GHS CL-2-GHS CL-3-GHS	CL-1-GHN CL-2-GHN CL-3-GHN	CL-1-GHD CL-2-GHD CL-3-GHD	CL-1W-065 to CL-3W-252
CL-4-G	CL-2-G	.251-.500	250	CL-3-GHS CL-4-GHS CL-5-GHS	CL-3-GHN CL-4-GHN CL-5-GHN	CL-3-GHD CL-4-GHD CL-5-GHD	CL-3W-252 to CL-5W-510
CL-5-G	CL-7-G	.501-.625	125	CL-5-GHS CL-6-GHS	CL-5-GHN CL-6-GHN	CL-5-GHD CL-6-GHD	CL-5W-510 to CL-6W-635
CL-6-G	CL-8-G	.626-.750	125	CL-6-GHS CL-7-GHS	CL-6-GHN CL-7-GHN	CL-6-GHD CL-7-GHD	CL-6W-635 to CL-7W-760

GAGE HANDLES & BUSHINGS

GAGE HANDLES: ALUMINUM
COLLET BUSHINGS: BRASS OR ALUMINUM

Single End GO (Green)

Single End NO-GO (Red)

Double End (Green and Red)

Collet Bushing

These single-end and double-end handles securely hold either Plug Gages or Step Plug Gages. Color-coded, screw-on ends identify GO and NO-GO gages (the NO-GO end also has an identification notch). Collet Bushings firmly hold gage pins against rotational and lateral forces. Gage-pin extension can be set at any length. One Collet Bushing is required for each gage pin (order separately). See pages 244-246 to select the proper handle and bushing for a given gage-pin size. All handles have a .129-dia cable hole for attaching permanently to an inspection fixture (see page 31 for Cable Assemblies).

Ordering Example

See pages 244-246
to select Gage Handles & Bushings

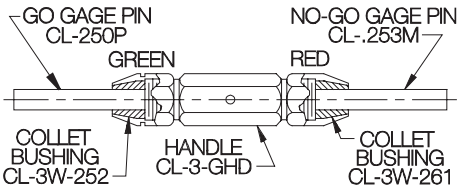

For a double-end assembly with a CL-.250P GO gage and a CL-.253M NO-GO gage, order the following:

(1) CL-3-GHD Gage Handle
(1) CL-.250P Plug Gage Pin
(1) CL-.253M Plug Gage Pin
(1) CL-3W-252 Collet Bushing
(1) CL-3W-261 Collet Bushing

GHS

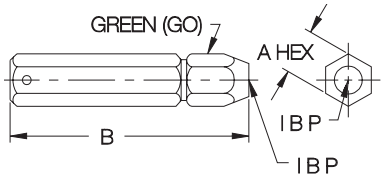

GHN

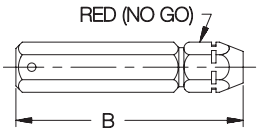

GHD

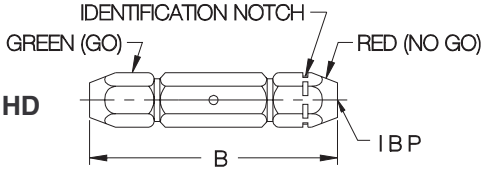

SEE PAGES 240-242 TO SELECT GAGE HANDLES & BUSHINGS

HANDLE PART NO.				
SINGLE END GO	SINGLE END NO-GO	DOUBLE END	A	B
CL-1-GHS	CL-1-GHN	CL-1-GHD	1/4	2-1/4
CL-2-GHS	CL-2-GHN	CL-2-GHD	3/8	2-11/16
CL-3-GHS	CL-3-GHN	CL-3-GHD	9/16	3-5/16
CL-4-GHS	CL-4-GHN	CL-4-GHD	11/16	3-9/16
CL-5-GHS	CL-5-GHN	CL-5-GHD	13/16	4-1/4
CL-6-GHS	CL-6-GHN	CL-6-GHD	15/16	4-1/2
CL-7-GHS	CL-7-GHN	CL-7-GHD	1-1/16	4-5/8
CL-8-GHS	CL-8-GHN	CL-8-GHD	1-1/4	5-1/4

Carr Lane®
MANUFACTURING CO.
4200 Carr Lane Ct., P.O. Box 191970
St. Louis, Missouri 63119-7970 USA
Phone: 314-647-6200, FAX: 314-647-5736
Web Site: www.carrlane.com

(Rev. 12-07)

GAGE HANDLES & BUSHINGS

SEE PAGES 250-251 FOR MATERIAL SPECIFICATIONS.
ORDER COMPONENTS INDIVIDUALLY.

Single End GO Assembly (Green)

(1) Gage Handle (GHS)
(1) Plug Gage or Step Plug Gage
(1) Collet Bushing

Single End NO-GO Assembly (Red)

(1) Gage Handle (GHN)
(1) Plug Gage or Step Plug Gage
(1) Collet Bushing

Double End Assembly (Green and Red)

(1) Gage Handle (GHD)
(2) Plug Gages or Step Plug Gages
(2) Collet Bushings

HANDLE PART NO.			PLUG GAGE PIN PART NO.		COLLET BUSHING PART NO.
SINGLE END GO	SINGLE END NO-GO	DOUBLE END	PLUS	MINUS	
NONE	NONE	NONE	CL-.011P through CL-.060P	CL-.011M through CL-.060M	NONE
CL-1-GHS	CL-1-GHN	CL-1-GHD	CL-.061P through CL-.065P	CL-.061M through CL-.065M	CL-1W-065
			CL-.066P through CL-.070P	CL-.066M through CL-.070M	CL-1W-070
			CL-.071P through CL-.075P	CL-.071M through CL-.075M	CL-1W-075
CL-2-GHS	CL-2-GHN	CL-2-GHD	CL-.076P through CL-.082P	CL-.076M through CL-.082M	CL-2W-082
			CL-.083P through CL-.089P	CL-.083M through CL-.089M	CL-2W-089
			CL-.090P through CL-.096P	CL-.090M through CL-.096M	CL-2W-096
			CL-.097P through CL-.103P	CL-.097M through CL-.103M	CL-2W-103
			CL-.104P through CL-.110P	CL-.104M through CL-.110M	CL-2W-110
			CL-.111P through CL-.117P	CL-.111M through CL-.117M	CL-2W-117
			CL-.118P through CL-.124P	CL-.118M through CL-.124M	CL-2W-124
			CL-.125P through CL-.131P	CL-.125M through CL-.131M	CL-2W-131
			CL-.132P through CL-.138P	CL-.132M through CL-.138M	CL-2W-138
			CL-.139P through CL-.145P	CL-.139M through CL-.145M	CL-2W-145
			CL-.146P through CL-.152P	CL-.146M through CL-.152M	CL-2W-152
			CL-.153P through CL-.159P	CL-.153M through CL-.159M	CL-2W-159

HANDLE PART NO.			PLUG GAGE PIN PART NO.		COLLET BUSHING PART NO.
SINGLE END GO	SINGLE END NO-GO	DOUBLE END	PLUS	MINUS	
CL-2-GHS	CL-2-GHN	CL-2-GHD	CL-.160P through CL-.166P	CL-.160M through CL-.166M	CL-2W-166
			CL-.167P through CL-.173P	CL-.167M through CL-.173M	CL-2W-173
			CL-.174P through CL-.180P	CL-.174M through CL-.180M	CL-2W-180
CL-3-GHS	CL-3-GHN	CL-3-GHD	CL-.181P through CL-.188P	CL-.181M through CL-.188M	CL-3W-188
			CL-.189P through CL-.196P	CL-.189M through CL-.196M	CL-3W-196
			CL-.197P through CL-.204P	CL-.197M through CL-.204M	CL-3W-204
			CL-.205P through CL-.212P	CL-.205M through CL-.212M	CL-3W-212
			CL-.213P through CL-.220P	CL-.213M through CL-.220M	CL-3W-220
			CL-.221P through CL-.228P	CL-.221M through CL-.228M	CL-3W-228
			CL-.229P through CL-.236P	CL-.229M through CL-.236M	CL-3W-236
			CL-.237P through CL-.244P	CL-.237M through CL-.244M	CL-3W-244
			CL-.245P through CL-.252P	CL-.245M through CL-.252M	CL-3W-252
			CL-.253P through CL-.261P	CL-.253M through CL-.261M	CL-3W-261
			CL-.262P through CL-.271P	CL-.262M through CL-.271M	CL-3W-271
			CL-.272P through CL-.281P	CL-.272M through CL-.281M	CL-3W-281

Carr Lane®
MANUFACTURING CO.
4200 Carr Lane Ct., P.O. Box 191970
St. Louis, Missouri 63119-7970 USA
Phone: 314-647-6200, FAX: 314-647-5736
Web Site: www.carrlane.com

(Rev. 12-07)

GAGE HANDLES & BUSHINGS

SEE PAGES 250-251 FOR MATERIAL SPECIFICATIONS.
ORDER COMPONENTS INDIVIDUALLY.

HANDLE PART NO.			PLUG GAGE PIN PART NO.		COLLET BUSHING PART NO.
SINGLE END GO	SINGLE END NO-GO	DOUBLE END	PLUS	MINUS	
CL-4-GHS	CL-4-GHN	CL-4-GHD	CL-.282P through CL-.291P	CL-.282M through CL-.291M	CL-4W-291
			CL-.292P through CL-.301P	CL-.292M through CL-.301M	CL-4W-301
			CL-.302P through CL-.311P	CL-.302M through CL-.311M	CL-4W-311
			CL-.312P through CL-.321P	CL-.312M through CL-.321M	CL-4W-321
			CL-.322P through CL-.331P	CL-.322M through CL-.331M	CL-4W-331
			CL-.332P through CL-.341P	CL-.332M through CL-.341M	CL-4W-341
			CL-.342P through CL-.351P	CL-.342M through CL-.351M	CL-4W-351
			CL-.352P through CL-.361P	CL-.352M through CL-.361M	CL-4W-361
			CL-.362P through CL-.371P	CL-.362M through CL-.371M	CL-4W-371
			CL-.372P through CL-.382P	CL-.372M through CL-.382M	CL-4W-382
			CL-.383P through CL-.394P	CL-.383M through CL-.394M	CL-4W-394
			CL-.395P through CL-.406P	CL-.395M through CL-.406M	CL-4W-406
CL-5-GHS	CL-5-GHN	CL-5-GHD	CL-.407P through CL-.420P	CL-.407M through CL-.420M	CL-5W-420
			CL-.421P through CL-.435P	CL-.421M through CL-.435M	CL-5W-435
			CL-.436P through CL-.450P	CL-.436M through CL-.450M	CL-5W-450
			CL-.451P through CL-.465P	CL-.451M through CL-.465M	CL-5W-465
			CL-.466P through CL-.480P	CL-.466M through CL-.480M	CL-5W-480
			CL-.481P through CL-.495P	CL-.481M through CL-.495M	CL-5W-495
			CL-.496P through CL-.510P	CL-.496M through CL-.510M	CL-5W-510

HANDLE PART NO.			PLUG GAGE PIN PART NO.		COLLET BUSHING PART NO.
SINGLE END GO	SINGLE END NO-GO	DOUBLE END	PLUS	MINUS	
CL-6-GHS	CL-6-GHN	CL-6-GHD	CL-.511P through CL-.532P	CL-.511M through CL-.532M	CL-6W-532
			CL-.533P through CL-.547P	CL-.533M through CL-.547M	CL-6W-547
			CL-.548P through CL-.563P	CL-.548M through CL-.563M	CL-6W-563
			CL-.564P through CL-.579P	CL-.564M through CL-.579M	CL-6W-579
			CL-.580P through CL-.594P	CL-.580M through CL-.594M	CL-6W-594
			CL-.595P through CL-.610P	CL-.595M through CL-.610M	CL-6W-610
			CL-.611P through CL-.625P	CL-.611M through CL-.625M	CL-6W-625
			CL-.626P through CL-.635P	CL-.626M through CL-.635M	CL-6W-635
CL-7-GHS	CL-7-GHN	CL-7-GHD	CL-.636P through CL-.656P	CL-.636M through CL-.656M	CL-7W-656
			CL-.657P through CL-.672P	CL-.657M through CL-.672M	CL-7W-672
			CL-.673P through CL-.688P	CL-.673M through CL-.688M	CL-7W-688
			CL-.689P through CL-.704P	CL-.689M through CL-.704M	CL-7W-704
			CL-.705P through CL-.719P	CL-.705M through CL-.719M	CL-7W-719
			CL-.720P through CL-.735P	CL-.720M through CL-.735M	CL-7W-735
			CL-.736P through CL-.750P	CL-.736M through CL-.750M	CL-7W-750
			CL-.751P through CL-.760P	CL-.751M through CL-.760M	CL-7W-760
CL-8-GHS	CL-8-GHN	CL-8-GHD	CL-.761P through CL-.781P	CL-.761M through CL-.781M	CL-8W-781
			CL-.782P through CL-.812P	CL-.782M through CL-.812M	CL-8W-812
			CL-.813P through CL-.843P	CL-.813M through CL-.843M	CL-8W-843
			CL-.844P through CL-.875P	CL-.844M through CL-.875M	CL-8W-875
			CL-.876P through CL-.906P	CL-.876M through CL-.906M	CL-8W-906
			CL-.907P through CL-.937P	CL-.907M through CL-.937M	CL-8W-937
			CL-.938P through CL-.968P	CL-.938M through CL-.968M	CL-8W-968
			CL-.969P through CL-1.010P	CL-.969M through CL-1.010M	CL-8W-1000

Carr Lane®
MANUFACTURING CO.
4200 Carr Lane Ct., P.O. Box 191970
St. Louis, Missouri 63119-7970 USA
Phone: 314-647-6200, FAX: 314-647-5736
Web Site: www.carrlane.com

(Rev. 12-07)

KEY INSERTS

These key-locking threaded inserts are ideal for thread reinforcement, especially when the mating stud or bolt will be removed frequently. They provide strong, permanent steel threads in any parent material — ferrous, non-ferrous, or non-metallic.

Key Inserts are also well suited for quick repair of stripped, damaged, or worn threads. A solid version is also available to use as a handy plug to relocate holes drilled or tapped on the wrong location.

Install with standard drills and taps. **Important:** Use tap drill specified in table (slightly larger than standard for that thread size). Tap-drill hole tolerance should be -.001/+.004 (-.001/+.005 above .500 dia).

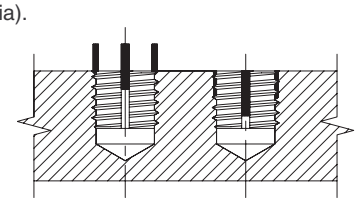

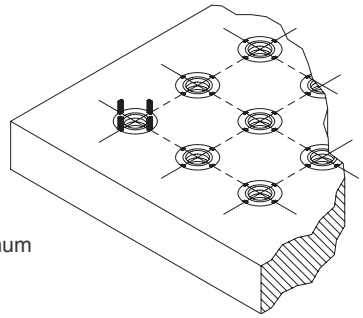

Key Inserts are often used to reinforce tapped holes in aluminum tooling plates.

Locking keys are driven down into the parent material during installation, providing a positive mechanical lock against rotation. Inserts with an ID thread 5/16 and above have four locking keys, smaller sizes have two. Pull-out strength can be calculated approximately by the following formula:

Approximate pull-out strength	=	Shear engagement area of insert (see table)	X	Minimum ultimate shear strength of parent material (psi)

EASY INSTALLATION

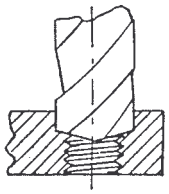

1. Drill out old threads using tap drill specified in table (**Important:** Correct tap drill is slightly larger than standard for that thread size).

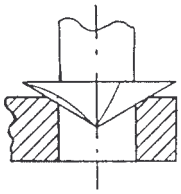

2. Countersink to diameter shown in table.

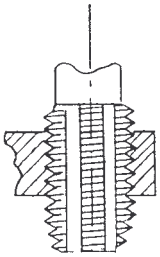

3. Tap new threads, using standard tap.

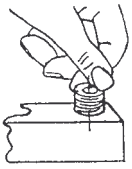

4. Screw in insert until body is slightly (.010 to .030 inches) below the surface, by hand or using installation tool. Keys act as a depth stop.

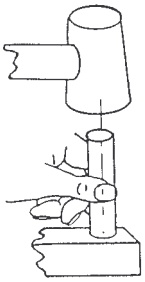

5. Drive keys down with several light hammer taps on installation tool (or directly on keys if no installation tool is available).

EASY REMOVAL

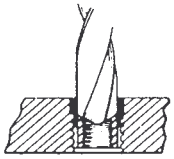

1. Drill out locking keys with specified drill diameter and depth (see table).

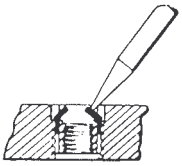

2. Deflect keys inward and break off.

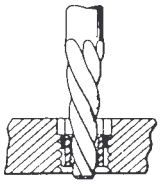

3. Remove insert with an E-Z OUT type tool.

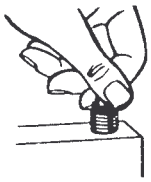

4. Screw replacement into original holes. Parent material is totally undamaged.

Carr Lane®
MANUFACTURING CO.
4200 Carr Lane Ct., P.O. Box 191970
St. Louis, Missouri 63119-7970 USA
Phone: 314-647-6200, FAX: 314-647-5736
Web Site: www.carrlane.com

(Rev. 5-08)

KEY INSERTS
HEAVY DUTY

BODY: 1215 STEEL, BLACK OXIDE FINISH. KEYS: 302 STAINLESS STEEL

Heavy Duty – Steel

General-purpose threaded inserts suitable for most applications. Available in USA ID-thread sizes from #10-24 to 1-1/2"-12, plus metric sizes from M5 to M24. **Important:** Use tap drill specified in table (slightly larger than standard for that thread size).

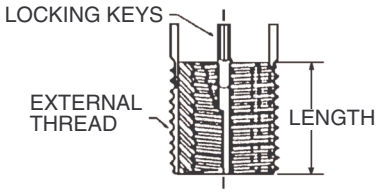

For installation tools, see tables below.

Repair Kits shown below contain an installation tool and several Key Inserts of a given size.

HEAVY DUTY – STEEL (USA)

PART NO.	INSERT DIMENSIONS: INTERNAL THREAD	EXTERNAL THREAD	LENGTH	SHEAR ENGAG. (SQ. IN.)	INSTALLATION DATA: REQ'D TAP DRILL	C'SINK DIA	MIN. THREAD DEPTH	STANDARD TAP UN-2B	INSTALLATION TOOL PART NO.	REPAIR KIT PART NO.	INSERTS PER KIT	REMOVAL DATA: DRILL SIZE	DRILL DEPTH
CL-1024-KS	#10-24	3/8-16	.31	.190	Q	3/8	3/8	3/8-16	CL-10-KST	CL-1024-KSK	15	9/32	1/8
CL-1032-KS	#10-32									CL-1032-KSK			
CL-1420-KS	1/4-20	7/16-14	.37	.284	X	7/16	7/16	7/16-14	CL-14-KST	CL-1420-KSK	13	11/32	3/16
CL-1428-KS	1/4-28									CL-1428-KSK			
CL-51618-KS	5/16-18	1/2-13	.43	.359	29/64	1/2	1/2	1/2-13	CL-516-KST	CL-51618-KSK	8	13/32	3/16
CL-51624-KS	5/16-24									CL-51624-KSK			
CL-3816-KS	3/8-16	9/16-12	.50	.498	33/64	9/16	9/16	9/16-12	CL-38-KST	CL-3816-KSK	6	15/32	3/16
CL-3824-KS	3/8-24									CL-3824-KSK			
CL-71614-KS	7/16-14	5/8-11	.62	.717	37/64	5/8	11/16	5/8-11	CL-716-KST	CL-71614-KSK	6	17/32	3/16
CL-71620-KS	7/16-20									CL-71620-KSK			
CL-1213-KS	1/2-13	3/4-16	.62	1.057	45/64	3/4	11/16	3/4-16	CL-12-KST	CL-1213-KSK	5	21/32	3/16
CL-1220-KS	1/2-20									CL-1220-KSK			
CL-91612-KS	9/16-12	3/4-16	.81	1.057	45/64	3/4	7/8	3/4-16	CL-12-KST	CL-91612-KSK	3	21/32	3/16
CL-91618-KS	9/16-18									CL-91618-KSK			
CL-5811-KS	5/8-11	7/8-14	.87	1.487	53/64	7/8	1	7/8-14	CL-58-KST	CL-5811-KSK	2	25/32	3/16
CL-5818-KS	5/8-18									CL-5818-KSK			
CL-3410-KS	3/4-10	1-1/8"-12	1.12	2.490	1-1/16	1-1/8	1-5/16	1-1/8"-12	CL-34-KST	CL-3410-KSK	2	31/32	5/16
CL-3416-KS	3/4-16									CL-3416-KSK			
CL-789-KS	7/8-9	1-1/4"-12	1.25	3.137	1-3/16	1-1/4	1-7/16	1-1/4"-12	CL-34-KST	CL-789-KSK	2	1-3/32	5/16
CL-7814-KS	7/8-14									CL-7814-KSK			
CL-18-KS	1"-8	1-3/8"-12	1.37	3.838	1-5/16	1-3/8	1-9/16	1-3/8"-12	CL-1-KST	CL-18-KSK	2	1-7/32	5/16
CL-112-KS	1"-12									CL-112-KSK			
CL-1187-KS	1-1/8"-7	1-1/2"-12	1.62	4.752	1-7/16	1-1/2	1-11/16	1-1/2"-12	CL-118-KST	CL-1187-KSK	2	1-11/32	5/16
CL-11812-KS	1-1/8"-12									CL-11812-KSK			
CL-1147-KS	1-1/4"-7	1-5/8"-12	1.81	5.446	1-35/64	1-5/8	2	1-5/8"-12	CL-114-KST	CL-1147-KSK	2	1-15/32	5/16
CL-11412-KS	1-1/4"-12									CL-11412-KSK			
CL-1126-KS	1-1/2"-6	1-7/8"-12	2.00	7.103	1-51/64	1-7/8	2-3/16	1-7/8"-12	CL-112-KST	CL-1126-KSK	2	1-23/32	5/16
CL-11212-KS	1-1/2"-12									CL-11212-KSK			

HEAVY DUTY – STEEL (METRIC)

–	M5	M10x1.25	AVAILABLE IN STAINLESS STEEL ONLY (PAGE 256)										
–	M6	M12x1.25											
–	M8	M14x1.5											
–	M8x1												
–	M10	M16x1.5											
–	M10x1.25												
–	M12	M18x1.5											
–	M12x1.25												
CLM-162-KSM	M16	M22x1.5	.87	1.390	20.5 or 13/16	.88	.96	M22x1.5	CL-58-KST	CLM-162-KSK	2	17.5mm or 11/16	1/4
CLM-1615-KSM	M16x1.5									CLM-1615-KSK			
CLM-2025-KSM	M20	M30x2	1.18	2.750	28mm or 1-7/64	1.19	1.36	M30x2	CL-34-KST	CLM-2025-KSK	2	26mm or 1-1/32	1/4
CLM-2015-KSM	M20x1.5									CLM-2015-KSK			
CLM-243-KSM	M24	M33x2	1.30	3.328	31mm or 1-7/32	1.31	1.48	M33x2	CLM-243-KSMT	CLM-243-KSK	2	29mm or 1-9/64	1/4
CLM-242-KSM	M24x2									CLM-242-KSK			

* Installation Tool included in Repair Kit.

Carr Lane®
MANUFACTURING CO.
4200 Carr Lane Ct., P.O. Box 191970
St. Louis, Missouri 63119-7970 USA
Phone: 314-647-6200, FAX: 314-647-5736
Web Site: www.carrlane.com

(Rev. 7-08)

KEY INSERTS
HEAVY DUTY

BODY: 303 STAINLESS STEEL. KEYS: 302 STAINLESS STEEL

NOW ALSO AVAILABLE IN METRIC!

Heavy Duty – Stainless Steel

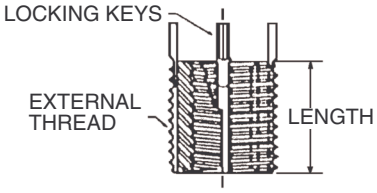

Heavy Duty – Stainless Steel Internal-Thread Locking

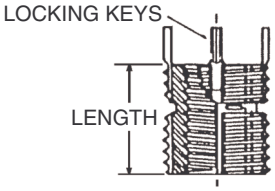

Stainless steel version of our general-purpose threaded inserts with a thick, heavy-duty thread wall. Key Inserts are ideal for thread reinforcement, especially when the mating stud or bolt will be removed frequently. These stainless inserts provide strong, permanent stainless steel threads in any parent material, ferrous, non-ferrous, or non-metallic. Key Inserts are also well suited for quick repair of stripped, damaged, or worn threads. Locking keys positively prevent the insert from rotating.

Stainless Key Inserts are optionally available with "Internal Thread Locking," which uses a modified internal thread to prevent the installed bolt or stud from rotating. This feature is useful for one-time, permanent installations.

See Technical Information at the beginning of this section for complete installation steps. Key Inserts are installed with standard drills and taps. Important: Use exactly the tap-drill size specified in the tables (slightly larger than the standard tap drill for that thread size). Locking keys are driven down into the parent material during installation, providing a positive mechanical lock against rotation. See tables for optional installation tools.

HEAVY DUTY — STAINLESS STEEL (USA)

	INSERT DIMENSIONS				INSTALLATION DATA					REMOVAL DATA			
PART NO.	INTERNAL THREAD	EXTERNAL THREAD	LENGTH	SHEAR ENGAGEMENT (SQ. IN.)	REQ'D TAP DRILL	C'SINK DIA	MIN. THREAD LENGTH	STANDARD TAP UN-2B	INSTALLATION TOOL PART NO.	DRILL SIZE	DRILL DEPTH	MS EQUIVALENT	NAS EQUIVALENT
CL-1024-SKS	#10-24	3/8-16	.31	.190	.332	.385	.37	3/8-16	CL-10-KST	9/32	1/8	MS 51831-101	—
CL-1032-SKS	#10-32											MS 51831-201	NAS 1395C3
CL-1420-SKS	1/4-20	7/16-14	.37	.284	.397	.447	.43	7/16-14	CL-14-KST	11/32	3/16	MS 51831-102	—
CL-1428-SKS	1/4-28											MS 51831-202	NAS 1395C4
CL-51618-SKS	5/16-18	1/2-13	.43	.359	.453	.510	.50	1/2-13	CL-516-KST	13/32	3/16	MS 51831-103	—
CL-51624-SKS	5/16-24											MS 51831-203	NAS 1395C5
CL-3816-SKS	3/8-16	9/16-12	.50	.498	.516	.572	.56	9/16-12	CL-38-KST	15/32	3/16	MS 51831-104	—
CL-3824-SKS	3/8-24											MS 51831-204	NAS 1395C6
CL-1213-SKS	1/2-13	3/4-16	.62	1.057	.703	.750	.69	3/4-16	CL-12-KST	21/32	3/16	—	—
CL-1220-SKS	1/2-20											—	—
CL-5811-SKS	5/8-11	7/8-14	.87	1.487	.828	.885	1.00	7/8-14	CL-58-KST	25/32	3/16	MS 51831-108	—
CL-3410-SKS	3/4-10	1-1/8"-12	1.12	2.490	1.062	1.145	1.31	1-1/8"-12	CL-34-KST	31/32	5/16	MS 51831-109	—

HEAVY DUTY — STAINLESS STEEL INTERNAL THREAD LOCKING (USA)

CL-1420-SKSL	1/4-20	7/16-14	.37	.197	.397	.447	.43	7/16-14	CL-14-KST	11/32	3/16	MS 51831-102L	—
CL-51618-SKSL	5/16-18	1/2-13	.43	.261	.453	.510	.50	1/2-13	CL-516-KST	13/32	3/16	MS 51831-103L	—
CL-3816-SKSL	3/8-16	9/16-12	.50	.384	.516	.572	.56	9/16-12	CL-38-KST	15/32	3/16	MS 51831-104L	—
CL-1213-SKSL	1/2-13	11/16-11NS	.68	.737	.641	.700	.75	11/16-11NS	CL-111611-KSST	19/32	3/16	MS 51831-106L	—
CL-5811-SKSL	5/8-11	7/8-14	.87	1.242	.828	.885	1.00	7/8-14	CL-58-KST	25/32	3/16	MS 51831-108L	—
CL-3410-SKSL	3/4-10	1-1/8"-12	1.25	2.448	1.062	1.145	1.31	1-1/8"-12	CL-34-KST	31/32	5/16	MS 51831-109L	—

HEAVY DUTY — STAINLESS STEEL (METRIC)

CLM-58-SKSM	M5	M10x1.25	.39	.275	8.8mm or S	.40	.45	M10x1.25	CL-10-KST	7.5mm or 19/64	.19	—	—
CLM-61-SKSM	M6	M12x1.25	.47	.413	10.8mm or 27/64	.48	.53	M12x1.25	CL-14-KST	9.5mm or 3/8	.19	—	—
CLM-8125-SKSM	M8	M14x1.5	.55	.530	13mm or 1/2	.56	.61	M14x1.5	CL-516-KST	11.5mm or 29/64	.19	—	—
CLM-81-SKSM	M8x1										.19	—	—
CLM-1015-SKSM	M10	M16x1.5	.63	.729	15mm or 37/64	.64	.69	M16x1.5	CL-38-KST	13.5mm or 17/32,	.19	—	—
CLM-10125-SKSM	M10x1.25										.19	—	—
CLM-12175-SKSM	M12	M18x1.5	.71	.820	17mm or 21/32	.72	.77	M18x1.5	CL-12-KST	15.5mm or 39/64	.19	—	—
CLM-12125-SKSM	M12x1.25										.19	—	—
CLM-162-SKS	M16	M22x1.5	.87	1.390	20.5mm or 13/16	.88	.96	M22x1.5	CLM-58-KSMT	17.5mm or 11/16	1/4	—	—
CLM-2025-SKS	M20	M30x2	1.18	2.750	28mm or 1-7/64	1.19	1.36	M30x2	CL-34-KST	26mm or 1-1/64	1/4	—	—
CLM-243-SKS	M24	M33x2	1.30	3.328	31mm or 1-7/32	1.31	1.48	M33x2	CLM-243-KSMT	29mm or 1-9/64	1/4	—	—

Carr Lane®
MANUFACTURING CO.
4200 Carr Lane Ct., P.O. Box 191970
St. Louis, Missouri 63119-7970 USA
Phone: 314-647-6200, FAX: 314-647-5736
Web Site: www.carrlane.com

(Rev. 7-08)

KEY INSERTS THINWALL

NOW ALSO AVAILABLE IN METRIC!

BODY: 12L15 STEEL, BLACK OXIDE FINISH, OR 303 STAINLESS STEEL.
KEYS: 302 STAINLESS STEEL

Thinwall — Steel and Stainless Steel

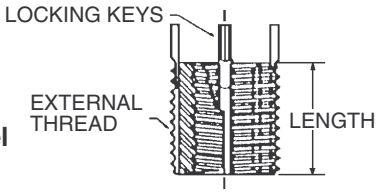

Thinwall — Stainless Steel Internal-Thread Locking

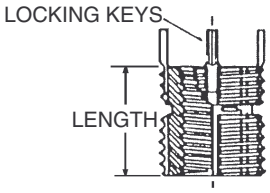

Thinwall Key Inserts have a smaller OD thread size than standard heavy-duty inserts, ideal for tight spaces where less pull-out strength is acceptable. Key Inserts are ideal for thread reinforcement, especially when the mating stud or bolt will be removed frequently. These stainless inserts provide strong, permanent stainless steel threads in any parent material, ferrous, non-ferrous, or non-metallic. Key Inserts are also well suited for quick repair of stripped, damaged, or worn threads. Locking keys positively prevent the insert from rotating.

Stainless Key Inserts are optionally available with “Internal Thread Locking,” which uses a modified internal thread to prevent the installed bolt or stud from rotating. This feature is useful for one-time, permanent installations.

See Technical Information at the beginning of this section for complete installation steps. Key Inserts are installed with standard drills and taps. Important: Use exactly the tap-drill size specified in the tables (slightly larger than the standard tap drill for that thread size). Locking keys are driven down into the parent material during installation, providing a positive mechanical lock against rotation. See tables for optional installation tools.

THINWALL — STAINLESS STEEL (USA)

	INSERT DIMENSIONS				INSTALLATION DATA					REMOVAL DATA			
PART NO.	INTERNAL THREAD	EXTERNAL THREAD	LENGTH	SHEAR ENGAGEMENT (SQ. IN.)	REQ'D TAP DRILL	C'SINK DIA	MIN. THREAD LENGTH	STANDARD TAP UN-2B	INSTALLATION TOOL PART NO.	DRILL SIZE	DRILL DEPTH	MS EQUIVALENT	NAS EQUIVALENT
CL-1024-TSKS	#10-24	5/16-18	.31	.152	.272	.323	.37	5/16-18	CL-10-KST	7/32	5/32	MS 51830-105	—
CL-1032-TSKS	#10-32											MS 51830-201	NAS 1394C3
CL-1420-TSKS	1/4-20	3/8-16	.37	.237	.332	.385	.43	3/8-16	CL-14-KST	9/32	3/16	MS 51830-106	—
CL-1428-TSKS	1/4-28											MS 51830-202	NAS 1394C4
CL-51618-TSKS	5/16-18	7/16-14	.43	.305	.397	.447	.50	7/16-14	CL-516-KST	11/32		MS 51830-107	—
CL-3816-TSKS	3/8-16	1/2-13	.50	.430	.453	.510	.56	1/2-13	CL-38-KST	13/32		MS 51830-108	—
CL-1213-TSKS	1/2-13	5/8-11	.62	.718	.578	.635	.68	5/8-11	CL-12-KST	17/32		MS 51830-110	—

THINWALL — STAINLESS STEEL INTERNAL THREAD LOCKING (USA)

CL-1032-TSKSL	#10-32	5/16-18	.31	.094	.272	.323	.37	5/16-18	CL-10-KST	7/32	5/32	MS 51830-201L	NAS 1394C3L
CL-1420-TSKSL	1/4-20	3/8-16	.37	.173	.332	.385	.43	3/8-16	CL-14-KST	9/32	3/16	MS 51830-106L	—
CL-51618-TSKSL	5/16-18	7/16-14	.43	.232	.397	.447	.50	7/16-14	CL-516-KST	11/32		MS 51830-107L	—
CL-3816-TSKSL	3/8-16	1/2-13	.50	.337	.453	.510	.56	1/2-13	CL-38-KST	13/32		MS 51830-108L	—
CL-1213-TSKSL	1/2-13	5/8-11	.68	.591	.578	.635	.68	5/8-11	CL-12-KST	17/32		MS 51830-110L	—

THINWALL — STEEL (METRIC)

CLM-58-KSM	M5	M8	.32	.163	6.9mm or I	.32	.36	M8	CL-10-KST	5.5mm or 7/32	5/32	—	—
CLM-61-KSM	M6	M10x1.25	.39	.275	8.8mm or S	.40	.45	M10x1.25	CL-14-KST	7.5mm or 19/64	3/16	—	—
CLM-8125-KSM	M8	M12x1.25	.47	.413	10.8mm or 27/64	.48	.54	M12x1.25	CL-516-KST	9.5mm or 3/8		—	—
CLM-81-KSM	M8x1											—	—
CLM-1015-KSM	M10	M14x1.5	.55	.530	13mm or 1/2	.56	.62	M14x1.5	CL-38-KST	11.5mm or 29/64		—	—
CLM-10125-KSM	M10x1.25											—	—
CLM-12175-KSM	M12	M16x1.5	.63	.729	15mm or 37/64	.63	.69	M16x1.5	CL-12-KST	13.5mm or 17/32		—	—
CLM-12125-KSM	M12x1.25											—	—

THINWALL — STAINLESS STEEL (METRIC)

CLM-58-SKS	M5	M8	.32	.163	6.9mm or I	.32	.36	M8	CL-10-KST	5.5mm or 7/32	5/32	—	—
CLM-61-SKS	M6	M10x1.25	.39	.275	8.8mm or S	.40	.45	M10x1.25	CL-14-KST	7.5mm or 19/64	3/16	—	—
CLM-8125-SKS	M8	M12x 1.25	.47	.413	10.8mm or 27/64	.48	.54	M12x1.25	CL-516-KST	9.5mm or 3/8		—	—
CLM-81-SKS	M8x1											—	—
CLM-1015-SKS	M10	M14x 1.5	.55	.530	13mm or 1/2	.56	.62	M14x1.5	CL-38-KST	11.5mm or 29/64		—	—
CLM-10125-SKS	M10x1.25											—	—
CLM-12175-SKS	M12	M16x 1.5	.63	.729	15mm or 37/64	.63	.69	M16x1.5	CL-12-KST	13.5mm or 17/32		—	—
CLM-12125-SKS	M12x1.25											—	—

Carr Lane MANUFACTURING CO.
4200 Carr Lane Ct., P.O. Box 191970
St. Louis, Missouri 63119-7970 USA
Phone: 314-647-6200, FAX: 314-647-5736
Web Site: www.carrlane.com

(Rev. 12-07)

KEY INSERTS
SOLID

NOW ALSO AVAILABLE IN METRIC!

BODY: 12L15 STEEL, BLACK OXIDE FINISH, OR 303 STAINLESS STEEL.
KEYS: 302 STAINLESS STEEL

Solid – Steel and Stainless Steel

Solid Key Inserts are ideal for relocating a drilled or tapped hole. This threaded plug installs quickly, and the locking keys positively prevent the insert from rotating.

See Technical Information at the beginning of this section for complete installation steps. Key Inserts are installed with standard drills and taps. Important: Use exactly the tap-drill size specified in the tables (slightly larger than the standard tap drill for that thread size). Locking keys are driven down into the parent material during installation, providing a positive mechanical lock against rotation. See tables for optional installation tools.

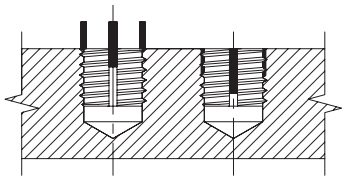

For installation tools, see table below.

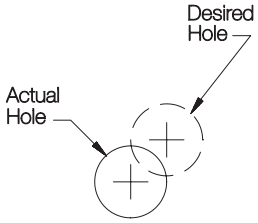

Before Repair

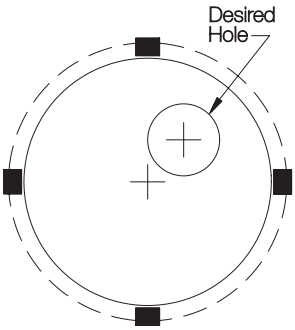

After Repair

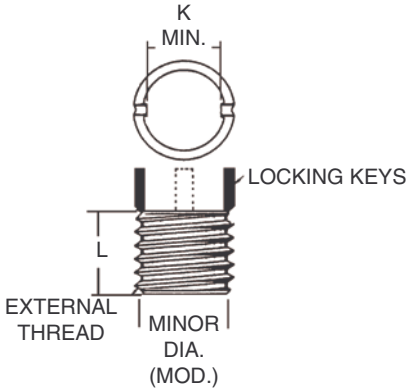

SOLID – STAINLESS STEEL (USA)

	INSERT DIMENSIONS				INSTALLATION DATA					REMOVAL DATA	
PART NO.	EXTERNAL THREAD	L	K	SHEAR ENGAGEMENT (SQ. IN.)	REQ'D TAP DRILL	C' SINK DIA +.010/-.000	STANDARD TAP UN-2B	MIN. THREAD DEPTH	INSTALLATION TOOL PART NO.	DRILL SIZE	DRILL DEPTH
CL-51618-KSS	5/16-18	.31	.216	.152	I	.323	5/16-18	.37	CL-51618-KSST	7/32	1/8
CL-3816-KSS	3/8-16	.31	.285	.190	Q	.385	3/8-16	.37	CL-3816-KSST	9/32	1/8
CL-71614-KSS	7/16-14	.37	.341	.284	X	.447	7/16-14	.43	CL-71614-KSST	11/32	3/16
CL-1213-KSS	1/2-13	.43	.403	.359	29/64	.510	1/2-13	.50	CL-1213-KSST	13/32	3/16
CL-91612-KSS	9/16-12	.50	.465	.498	33/64	.572	9/16-12	.56	CL-91612-KSST	15/32	3/16
CL-5811-KSS	5/8-11	.62	.528	.717	37/64	.635	5/8-11	.68	CL-5811-KSST	17/32	3/16
CL-111611-KSS	11/16-11-NS	.68	.590	.888	41/64	.700	11/16-11-NS	.75	CL-111611-KSST	19/32	3/16
CL-131616-KSS	13/16-16	.81	.716	1.249	49/64	.822	13/16-16	.94	CL-131616-KSST	23/32	3/16
CL-7814-KSS	7/8-14	.87	.778	1.487	53/64	.885	7/8-14	1.00	CL-7814-KSST	25/32	3/16
CL-11812-KSS	1-1/8"-12	1.12	.970	2.490	1-1/16	1.145	1-1/8"-12	1.31	CL-11812-KSST	31/32	5/16
CL-11412-KSS	1-1/4"-12	1.25	1.095	3.137	1-3/16	1.270	1-1/4"-12	1.41	CL-11412-KSST	1-3/32	5/16
CL-13812-KSS	1-3/8"-12	1.37	1.220	3.838	1-5/16	1.395	1-3/8"-12	1.56	CL-13812-KSST	1-7/32	5/16

SOLID – STEEL (METRIC)

CLM-8125-KSSM	M8	.31	.218	.154	6.9mm or I	.325	M8	.37	CLM-8125-KSST	5.5mm or 7/32	.16
CLM-10125-KSSM	M10 x 1.25	.39	.299	.209	8.8mm or S	.404	M10 x 1.25	.49	CLM-10125-KSST	7.5mm or M	.19
CLM-12125-KSSM	M12 x 1.5	.47	.368	.331	10.8mm or 27/64	.482	M12 x 1.25	.57	CLM-12125-KSST	9.5mm or 3/8	.19
CLM-1615-KSSM	M16 x 1.5	.63	.532	.728	14.75mm or 37/64	.640	M16 x 1.5	.73	CLM-1615-KSST	13.5mm or 17/32	.19
CLM-2015-KSSM	M20 x 1.5	.79	.694	1.173	18.75mm or 47.64	.797	M20 x 1.5	.89	CLM-2015-KSST	17.5mm or 11/16	.19
CLM-2415-KSSM	M24 x 1.5	.94	.815	1.757	22.5mm or 57/64	.955	M24 x 1.5	1.04	CLM-2415-KSST	19.75mm or 25/32	.25
CLM-302-KSSM	M30 x 2	1.18	1.035	2.800	28mm or 1-7/64	1.191	M30 x 2	1.36	CLM-302-KSST	25.75mm or 1-1/64	.25

Carr Lane®
MANUFACTURING CO.
4200 Carr Lane Ct., P.O. Box 191970
St. Louis, Missouri 63119-7970 USA
Phone: 314-647-6200, FAX: 314-647-5736
Web Site: www.carrlane.com

(Rev. 5-08)

KEY INSERT ASSORTMENTS

With Key Insert Assortments, you always have the right insert and installation tool on hand for thread repairs. Each of the four assortments contains many different insert sizes and an installation tool for each size. The durable case provides convenient storage and clear organization. Order individual inserts on pages 253-255 as refills.

To order repair kits for a single thread size, see page 253.

UNC COARSE

PART NO.	CONTAINS THESE INSERTS			CONTAINS THESE TOOLS
	QTY	ID THREAD	PART NO.	
CL-1-KS-C	5	#10-24	CL-1024-KS	CL-10-KST
	10	1/4-20	CL-1420-KS	CL-14-KST
	10	5/16-18	CL-51618-KS	CL-516-KST
	10	3/8-16	CL-3816-KS	CL-38-KST
	10	1/2-13	CL-1213-KS	CL-12-KST
	10	5/8-11	CL-5811-KS	CL-58-KST
	5	3/4-10	CL-3410-KS	CL-34-KST

UNC COARSE — STAINLESS STEEL

PART NO.	CONTAINS THESE INSERTS			CONTAINS THESE TOOLS
	QTY	ID THREAD	PART NO.	
CL-1-SKS-C	5	#10-24	CL-1024-SKS	CL-10-KST
	10	1/4-20	CL-1420-SKS	CL-14-KST
	10	5/16-18	CL-51618-SKS	CL-516-KST
	10	3/8-16	CL-3816-SKS	CL-38-KST
	10	1/2-13	CL-1213-SKS	CL-12-KST
	10	5/8-11	CL-5811-SKS	CL-58-KST
	5	3/4-10	CL-3410-SKS	CL-34-KST

UNF FINE

PART NO.	CONTAINS THESE INSERTS			CONTAINS THESE TOOLS
	QTY	ID THREAD	PART NO.	
CL-1-KS-F	5	#10-32	CL-1032-KS	CL-10-KST
	10	1/4-28	CL-1428-KS	CL-14-KST
	10	5/16-24	CL-51624-KS	CL-516-KST
	10	3/8-24	CL-3824-KS	CL-38-KST
	10	1/2-20	CL-1220-KS	CL-12-KST
	10	5/8-18	CL-5818-KS	CL-58-KST
	5	3/4-16	CL-3416-KS	CL-34-KST

METRIC COARSE

PART NO.	CONTAINS THESE INSERTS			CONTAINS THESE TOOLS
	QTY	ID THREAD	PART NO.	
CLM-1-KSM-C	5	M5	CLM-58-KSM	CL-10-KST
	10	M6	CLM-61-KSM	CL-14-KST
	10	M8	CLM-8125-KSM	CL-516-KST
	10	M10	CLM-1015-KSM	CL-38-KST
	10	M12	CLM-12175-KSM	CL-12-KST
	10	M16	CLM-162-KSM	CL-58-KST
	5	M20	CLM-2025-KSM	CL-34-KST

SOLID — STAINLESS STEEL

PART NO.	CONTAINS THESE INSERTS			CONTAINS THESE TOOLS
	QTY	OD THREAD	PART NO.	
CL-1-KSS-S	5	5/16-18	CL-51618-KSS	CL-51618-KSST
	10	3/8-16	CL-3816-KSS	CL-3816-KSST
	10	1/2-13	CL-1213-KSS	CL-1213-KSST
	10	9/16-12	CL-91612-KSS	CL-91612-KSST
	10	5/8-11	CL-5811-KSS	CL-5811-KSST
	10	7/8-14	CL-7814-KSS	CL-7814-KSST
	5	1-1/8"-12	CL-11812-KSS	CL-11812-KSST

CarrLane® MANUFACTURING CO.
4200 Carr Lane Ct., P.O. Box 191970
St. Louis, Missouri 63119-7970 USA
Phone: 314-647-6200, FAX: 314-647-5736
Web Site: www.carrlane.com

(Rev. 12-07)

SELF-TAPPING THREADED INSERTS

1117 STEEL, CARBURIZED-HARDENED, ZINC OR CADMIUM PLATED

Thread reinforcement for Aluminum and Magnesium. Self tapping for one-time permanent installation.

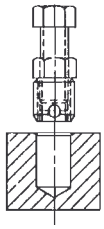

Tighten nut against insert. Bolt should not extend beyond end of insert.

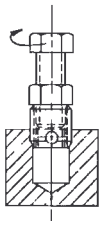

Alignment is important while threading.

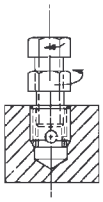

Break nut loose while holding bolt.

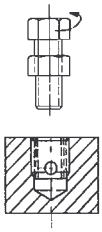

Back out bolt and nut.

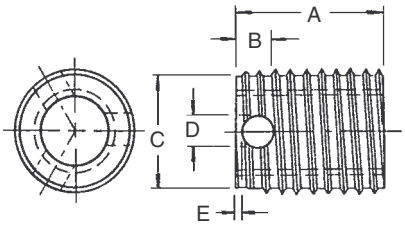

USA

PART NO.	INTERNAL THREAD	EXTERNAL THREAD	A	B	C PILOT DIA	D DIA	E	HOLE SIZE ALUM & MAG PLATE	HOLE SIZE CAST ALUM & MAG
CL-4-TI	1/4-20	3/8-20	.484	.103	.332	1/8	.031	.356 - .349	.349 - .343
CL-5-TI	5/16-18	15/32-18	.562	.117	.420	9/64	.035	.447 - .440	.440 - .433
CL-6-TI	3/8-16	9/16-16	.687	.129	.510	5/32	.038	.538 - .530	.530 - .521
CL-8-TI	1/2-13	47/64-13	.906	.172	.668	7/32	.045	.704 - .694	.694 - .684
CL-10-TI	5/8-11	29/32-11	.937	.198	.827	1/4	.052	.871 - .859	.859 - .847
CL-12-TI	3/4-10	1-5/64"-10	1.375	.222	.993	9/32	.057	1.028 - 1.016	1.016 - 1.004

METRIC

CLM-6-TI	M6	3/8-20	.484	.103	.332	1/8	.031	.356 - .349	.349 - .343
CLM-8-TI	M8	15/32-18	.562	.117	.420	9/64	.035	.447 - .440	.440 - .433
CLM-10-TI	M10	9/16-16	.687	.129	.510	5/32	.038	.538 - .530	.530 - .521
CLM-12-TI	M12	47/64-13	.906	.172	.668	7/32	.045	.704 - .694	.694 - .684
CLM-16-TI	M16	29/32-11	.937	.198	.827	1/4	.052	.871 - .859	.859 - .847

CAST INSERTS

DUCTILE IRON PER ASTM CLASS 65-45-10

Insert for drop-hammer-die studs.

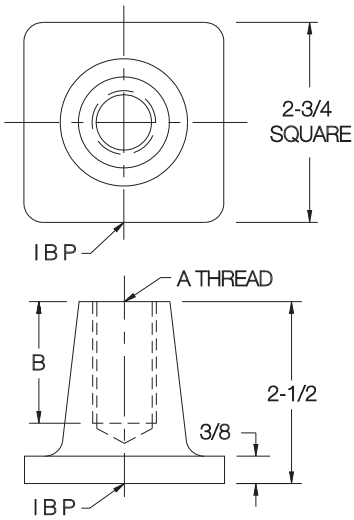

PART NO.	A	B
CL-14-KI	7/8-9	1-3/4
CL-16-KI	1"-8	1-7/8

CarrLane®
MANUFACTURING CO.
4200 Carr Lane Ct., P.O. Box 191970
St. Louis, Missouri 63119-7970 USA
Phone: 314-647-6200, FAX: 314-647-5736
Web Site: www.carrlane.com

(Rev. 12-07)

RECTANGULAR TOOLING PLATES

GRAY CAST IRON, ASTM CLASS 40

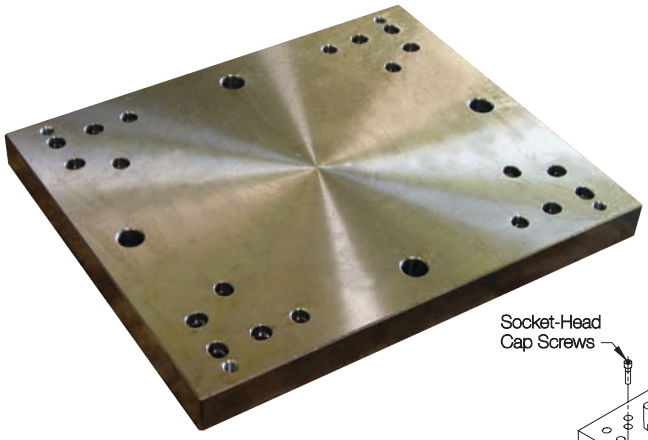

Precision Blank

Precision blank tooling plates that are ready to mount on virtually any milling machine, reducing tooling cost and leadtime considerably. Finish ground to tight tolerances. Precision Locating-Key holes allow accurate quick-change mounting on a subplate, as well as directly on a machine table. Available in a full range of standard fixture sizes, with mounting holes to fit almost any USA or metric slot spacing. See page 173 for Locating Keys and Subplate Locating Keys, and page 223 for T Nuts, to fit specific table-slot sizes.

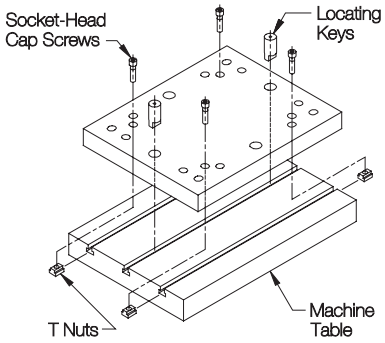

T-Slotted Table

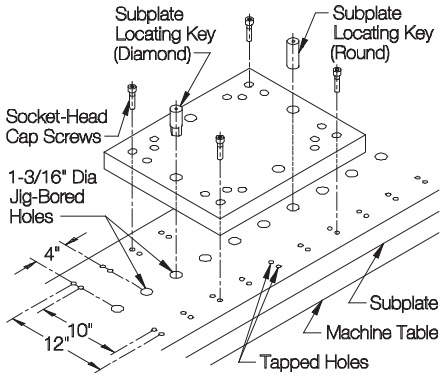

Subplate

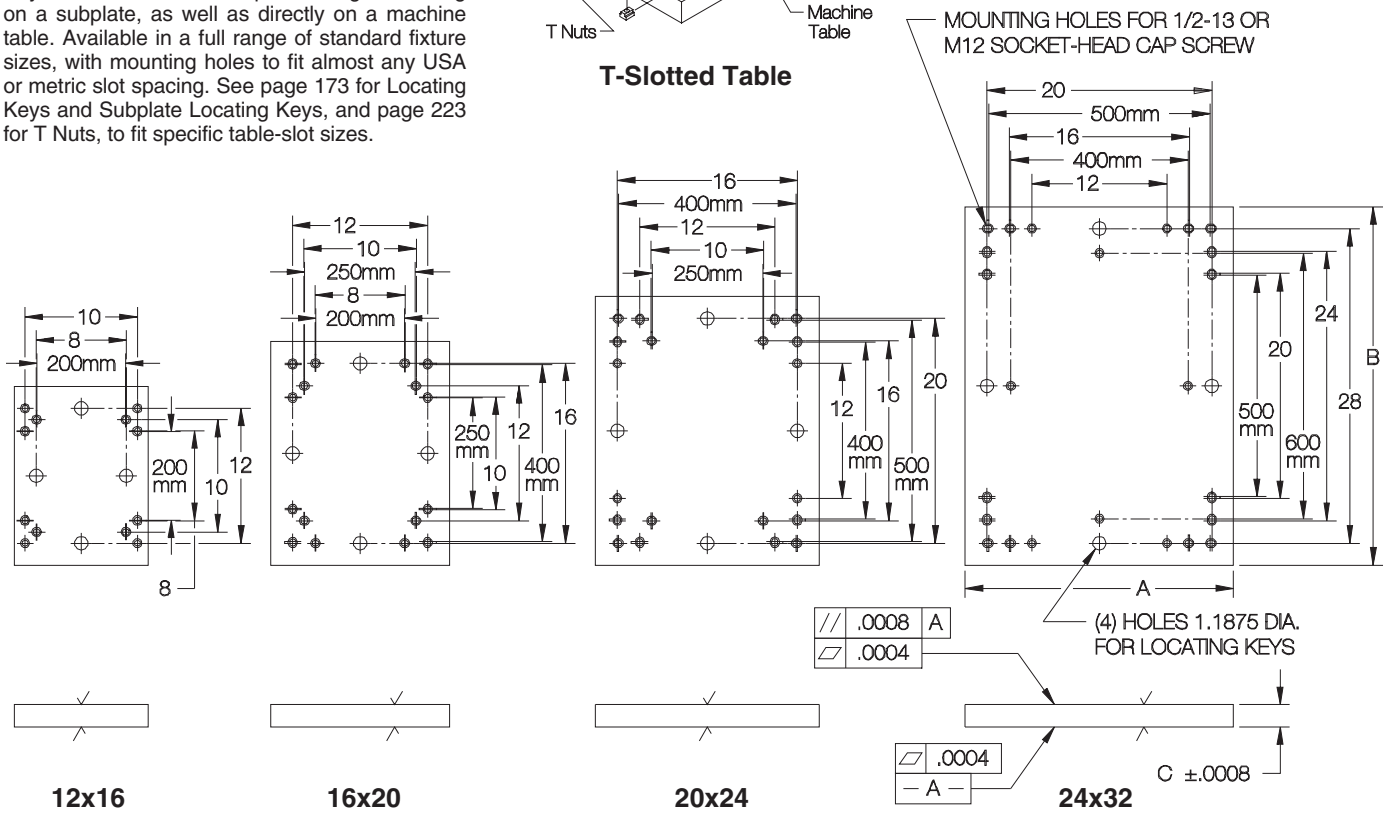

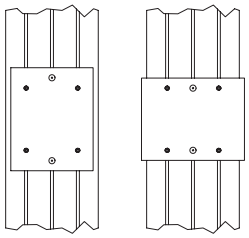

Two sets of Locating-Key holes allow mounting plates either lengthwise or widthwise on a machine table.

PART NO.	A NOMINAL	A ACTUAL	B NOMINAL	B ACTUAL	C	NO. OF MOUNTING SCREWS REQUIRED	APPROX WEIGHT (LBS)
CL-BF00-0110	12	11.875	16	15.875	2.0000	4	95
CL-BF00-0111	16	15.875	20	19.875			160
CL-BF00-0112	20	19.875	24	23.875			240
CL-BF00-0113	24	23.875	32	31.875		6	370

Carr Lane®
MANUFACTURING CO.
4200 Carr Lane Ct., P.O. Box 191970
St. Louis, Missouri 63119-7970 USA
Phone: 314-647-6200, FAX: 314-647-5736
Web Site: www.carrlane.com

(Rev. 12-07)

VERTICAL TOOLING PLATES

GRAY CAST IRON, ASTM CLASS 40

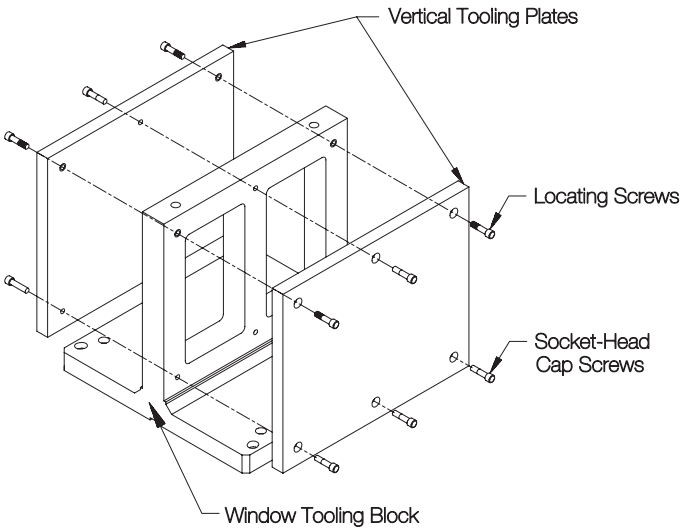

Precision Blank

Precision blank tooling plates that mount vertically on Window Tooling Blocks, for quick-change fixturing on machining centers. Finish ground to tight tolerances. Available to fit the three most-popular standard pallet sizes. Each plate is accurately mounted on a Window Tooling Block using two Locating Screws at the top corners, and two socket-head cap screws (four on 630mm size).

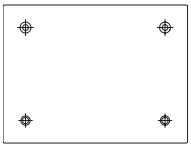

12x16
400mm Pallet

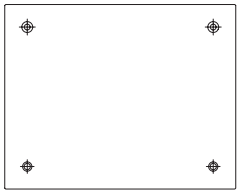

16x20
500mm Pallet

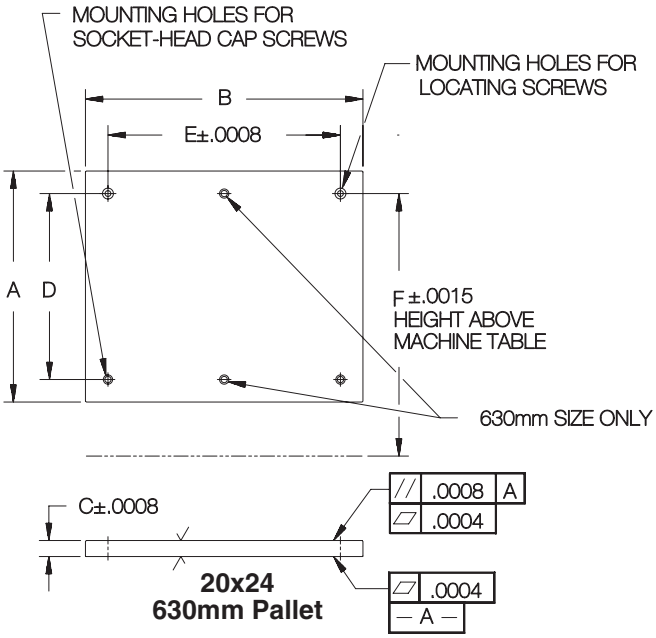

20x24
630mm Pallet

For Window Tooling Blocks and mounting screws, see pages 24MF and 32MF.

PART NO.	PALLET SIZE	A NOMINAL	A ACTUAL	B NOMINAL	B ACTUAL	C	D	E	F	APPROX WEIGHT (LBS)	LOCATING SCREWS (2 REQD)	SOCKET-HEAD CAP SCREWS (2 OR 4 REQD)
CL-BF40-0201	400mm	12	11.875	16	15.875	1.3750	8	12.0000	12.7500	70	CL-MF40-4301	CL-1/2-13x1.75-SHCS
CL-BF40-0202	500mm	16	15.875	20	19.875		12	16.0000	16.7500	115		
CL-BF40-0203	630mm	20	19.875	24	23.875		16	20.0000	20.7500	170		

Carr Lane®
MANUFACTURING CO.
4200 Carr Lane Ct., P.O. Box 191970
St. Louis, Missouri 63119-7970 USA
Phone: 314-647-6200, FAX: 314-647-5736
Web Site: www.carrlane.com

(Rev. 12-07)

SQUARE PALLET TOOLING PLATES

GRAY CAST IRON, ASTM CLASS 40

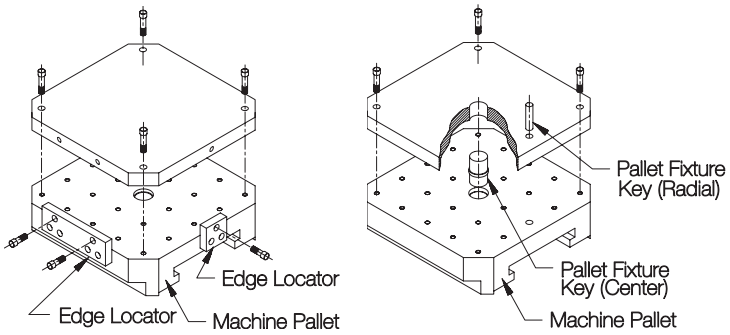

Dual Mounting (JIS and DIN)

Precision Blank

Precision blank tooling plates that are ready to mount on standard machining-center pallets, reducing tooling cost and leadtime considerably. Finish ground to tight tolerances. Dual mounting capability allows both JIS mounting (locating from two reference edges) and DIN mounting (locating from center and radial holes) with excellent accuracy. See page 178 for the Pallet Fixture Keys used for DIN mounting.

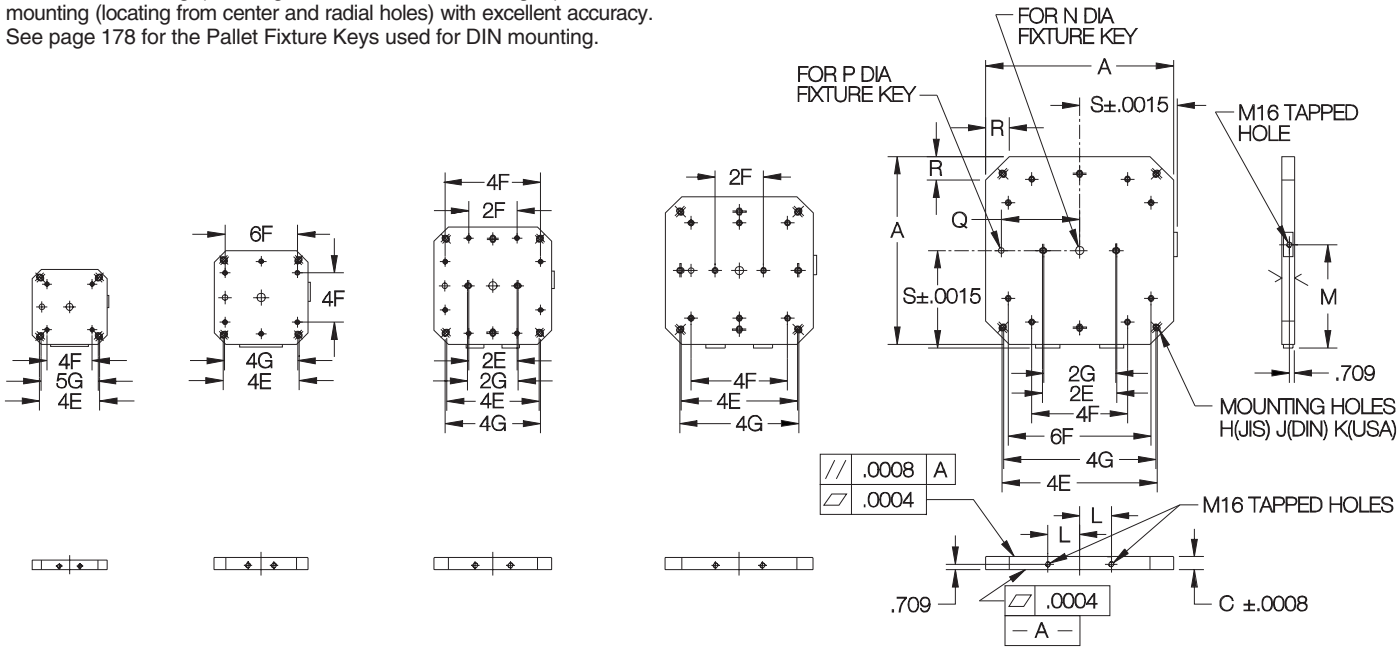

300mm** **400mm** **500mm** **630mm** **800mm**

DUAL MOUNTING

PART NO.	A NOMINAL	A ACTUAL	C NOMINAL	C ACTUAL	E (JIS)	F (DIN)	G (USA)	H (JIS)	J (DIN)	K (USA)	L	M	N DIA	P DIA	Q	R	S	APPROX WT (LBS)
CL-BF00-0820	300mm	11.81	35mm	1.3780	63mm	50mm	50mm	M16	M10	5/8-11 or M16	1.969	7.283	25mm	20mm	3.9370	.79	6.2992	55
CL-BF00-0821	400mm	15.20	50mm	1.9685	80mm	50mm	3.000		M12		2.165	8.858	30mm		5.9055	1.42	7.8740	125
CL-BF00-0822	500mm	19.13	50mm	1.9685	100mm	100mm	4.000				2.953	10.827			7.8740	1.81	9.8425	195
CL-BF00-0823	630mm	24.25	50mm	1.9685	125mm	100mm	5.000		M16		3.937	13.386		25mm	7.8740	2.20	12.4016	310
CL-BF00-0824	800mm	30.94	60mm	2.3622	160mm		6.000				5.315	16.732			11.8110	3.39	15.7480	595

** 300mm size also fits 320mm pallets with the 10mm-thick edge pads furnished.

Carr Lane®
MANUFACTURING CO.
4200 Carr Lane Ct., P.O. Box 191970
St. Louis, Missouri 63119-7970 USA
Phone: 314-647-6200, FAX: 314-647-5736
Web Site: www.carrlane.com

(Rev. 12-07)

RECTANGULAR PALLET TOOLING PLATES

GRAY CAST IRON, ASTM CLASS 40

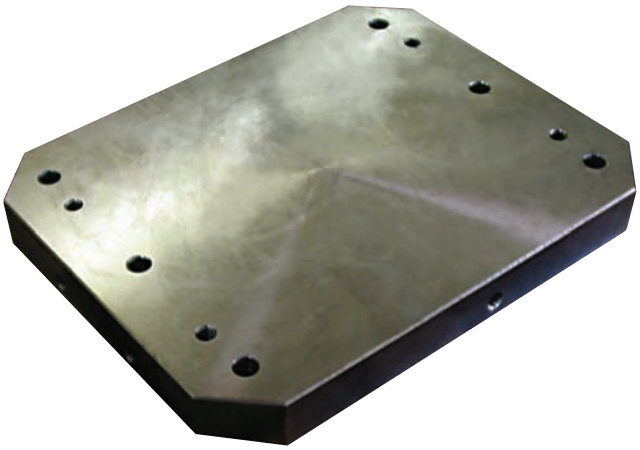

Precision Blank

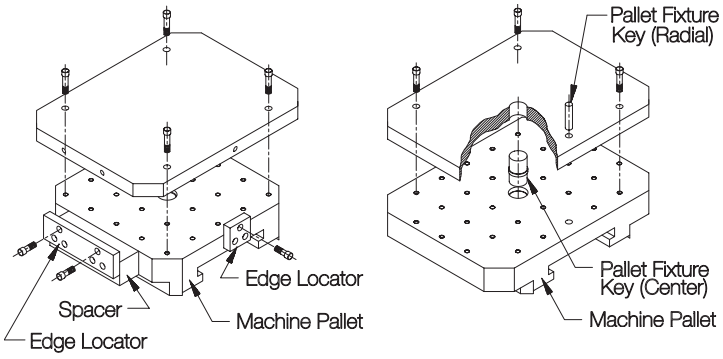

Dual Mounting (JIS and DIN)

Precision blank tooling plates that are ready to mount on standard machining-center pallets, reducing tooling cost and leadtime considerably. Finish ground to tight tolerances. Dual mounting capability allows both JIS mounting (locating from two reference edges) and DIN mounting (locating from center and radial holes) with excellent accuracy. See page 175 for the Pallet Fixture Keys used for DIN mounting.

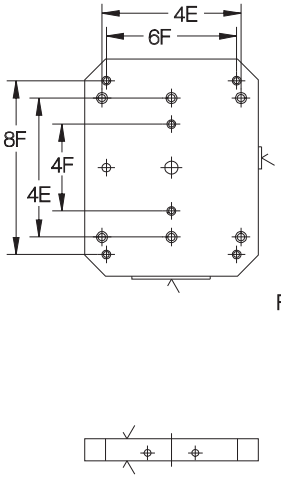

400x500mm

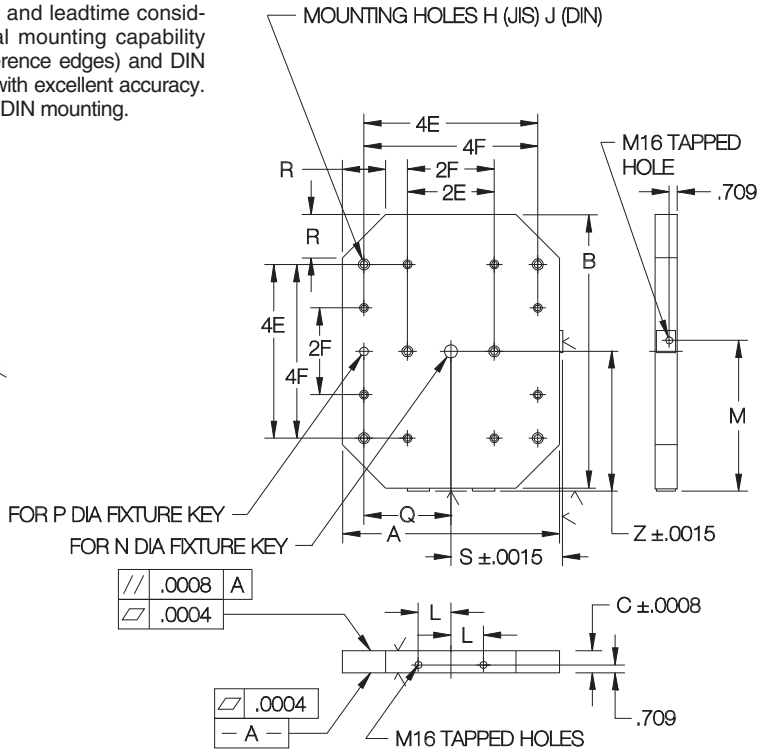

500x630mm

DUAL MOUNTING

PART NO.	A NOMINAL	A ACTUAL	B NOMINAL	B ACTUAL	C NOMINAL	C ACTUAL	E (JIS)	F (DIN)	H (JIS)	J (DIN)	L	M	N DIA	P DIA	Q	R	S	Z	APPROX WT (LBS)
CL-BF00-0871	400mm	15.20	500mm	19.13	50mm	1.9685	80mm	50mm	M16	M12	2.165	10.827	30mm	20mm	5.9055	1.42	7.8740	9.8425	160
CL-BF00-0872	500mm	19.13	630mm	24.25	50mm	1.9685	100mm	100mm			2.953	13.386			7.8740	3.39	9.8425	12.4016	250

Carr Lane MANUFACTURING CO.
4200 Carr Lane Ct., P.O. Box 191970
St. Louis, Missouri 63119-7970 USA
Phone: 314-647-6200, FAX: 314-647-5736
Web Site: www.carrlane.com

(Rev. 5-08)

TWO-SIDED TOOLING BLOCKS

NEW!

A713 TENZALOY ALUMINUM ALLOY, AGED TO T-6 CONDITION

Custom Blank

Choice of three configurations:
(1) Machined base with mounting holes, and machined faces (inch or metric)
(2) Machined base with mounting holes, and unmachined faces
(3) Unmachined blank casting

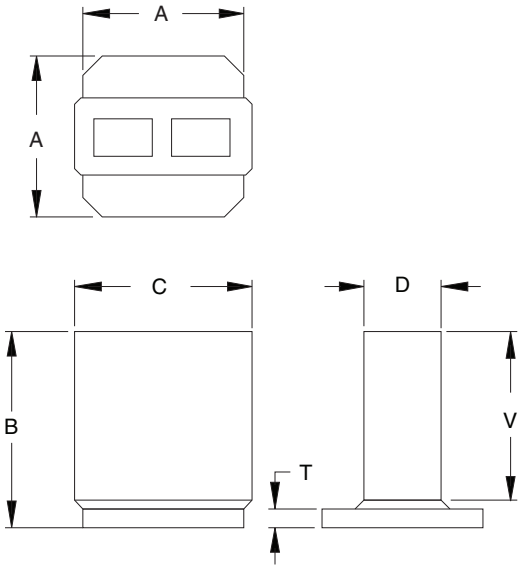

MACHINED BASE WITH MOUNTING HOLES, AND MACHINED FACES (METRIC SIZES)

PART NO.	PALLET SIZE	A	B	C	D (+.030)	T	V
CL-DPA-75400490-300-BS*	300mm	11.81	19.3 (490mm)	15.75 (400mm)	2.953 (75mm)	1.5	17.7
CL-DPA-100300450-300-BS*			17.7 (450mm)	11.81 (300mm)	3.937 (100mm)		15.7
CL-DPA-150300450-BS*					5.906 (150mm)		
CL-DPA-75400490-400-BS*	400mm	15.75	19.3 (490mm)	15.75 (400mm)	2.953 (75mm)	1.5	17.7
CL-DPA-100200490-BS*			19.3 (490mm)	7.87 (200mm)	3.937 (100mm)		17.7
CL-DPA-100300450-400-BS*			17.7 (450mm)	11.81 (300mm)			15.7
CL-DPA-100400500-BS*			19.7 (500mm)	15.75 (400mm)			18.5
CL-DPA-100400630-BS*			24.8 (630mm)				22
CL-DPA-100410500-BS*			19.7 (500mm)	16.14 (410mm)		1.8	17.7
CL-DPA-150450500-BS*			19.7 (500mm)	17.72 (450mm)	5.906 (150mm)	1.5	17.7
CL-DPA-200400500-BS			19.7 (500mm)	15.75 (400mm)	7.874 (200mm)		17.7
CL-DPA-200400600-BS			23.6 (600mm)				22
CL-DPA-305375525-BS			20.7 (525mm)	14.76 (375mm)	12.008 (305mm)	2	18.9
CL-DPA-150500600-BS*	500mm	19.69	23.6 (600mm)	19.69 (500mm)	5.906 (150mm)	1.5	22
CL-DPA-150500700-BS*			27.6 (700mm)				24.8
CL-DPA-200400650-BS			25.6 (650mm)	15.75 (400mm)	7.874 (200mm)	2.5	23
CL-DPA-200500600-BS			23.6 (600mm)	19.69 (500mm)		1.5	19.7
CL-DPA-200500725-BS			28.5 (725mm)				24.8
CL-DPA-200650850-BS			33.5 (850mm)	25.59 (650mm)			29.5
CL-DPA-250500725-BS			28.5 (725mm)	19.69 (500mm)	9.843 (250mm)		26.6
CL-DPA-100600600-BS*	630mm	24.80	23.6 (600mm)	23.62 (600mm)	3.937 (100mm)	1.5	22
CL-DPA-100630800-BS*			31.5 (800mm)	24.80 (630mm)		2	30.5
CL-DPA-150630750-BS*			29.5 (750mm)	24.80 (630mm)	5.906 (150mm)	2	27.6
CL-DPA-150710875-BS			34.4 (875mm)	27.95 (710mm)			33.1
CL-DPA-200630750-BS			29.5 (750mm)	24.80 (630mm)	7.874 (200mm)	1.5	27.6
CL-DPA-200650700-BS			27.6 (700mm)	25.59 (650mm)		2	23.6
CL-DPA-250630750-BS			29.5 (750mm)	24.80 (630mm)	9.843 (250mm)	1.5	27.6
CL-DPA-250630900-BS			35.4 (900mm)				33.5
CL-DPA-2506301050-BS			41.3 (1050mm)				39.4
CL-DPA-250750900-BS			35.4 (900mm)	29.53 (750mm)		2	33.5
CL-DPA-2507501050-BS	800mm	31.50	41.3 (1050mm)	29.53 (750mm)	9.843 (250mm)	2	39.4
CL-DPA-1509251400-BS*	1000mm	39.37	55.1 (1400mm)	36.42 (925mm)	5.906 (150mm)	2	53.1

*solid casting without center core.

MACHINED BASE WITH MOUNTING HOLES, AND MACHINED FACES (INCH SIZES)

PART NO.	PALLET SIZE	A	B	C	D (+.030)	T	V
CL-DPA-31619.5-300-BS*	300mm	11.81	19.5	16	3.000	1.5	18
CL-DPA-41218-300-BS*			18	12	4.000		16
CL-DPA-61218-BS*				11.8	6.000		
CL-DPA-31619.5-400-BS*	400mm	15.75	19.5	16	3.000	1.5	18
CL-DPA-4819.5-BS*			19.5	8	4.000		18
CL-DPA-41218-400-BS*			18	12			16
CL-DPA-41520-BS*			20	15			18.5
CL-DPA-41524-BS*			24				22.5
CL-DPA-41620-BS*			20	16		1.75	18
CL-DPA-61820-BS*			20	18	6.000	1.5	18
CL-DPA-81520-BS			20	15.7	8.000		18
CL-DPA-81524-BS			24				22
CL-DPA-81528-BS			28			2.5	25.5
CL-DPA-121521-BS			21	15	12.000	2	19
CL-DPA-41624-BS	500mm	19.69	24	20	4.000	2	22.5
CL-DPA-62024-BS*			24		6.000	1.5	22
CL-DPA-62028-BS*			28				26
CL-DPA-81526-2.5-BS			26	15	8.000	2.5	23
CL-DPA-82024-BS			24	20		1.5	20
CL-DPA-82029-BS			29				25
CL-DPA-82634-BS			34	26			30
CL-DPA-102029-BS			29	20	10.000		26.5
CL-DPA-42424-BS*	630mm	24.80	24	24	4.000	1.5	22
CL-DPA-42532-BS*			32	24.8		2	30
CL-DPA-5.54039-BS			39	40	5.500	2	36
CL-DPA-62530-BS*			30	24.8	6.000	2	28
CL-DPA-62835-BS*			35	28			33
CL-DPA-63638-BS			38	36			36.2
CL-DPA-82530-BS			30	25	8.000	1.5	28
CL-DPA-102530-BS			30	25	10.000	1.5	28
CL-DPA-102536-BS			36				34
CL-DPA-102542-BS			42				40
CL-DPA-103036-BS			36	30		2	34
CL-DPA-122030-BS			30	20	12.000	1.5	28
CL-DPA-103042-BS	800mm	31.50	42	30	10.000	2	39.8
CL-DPA-63755-BS*	1000mm	39.37	55	37	6.000	2	30

Carr Lane MANUFACTURING CO.
4200 Carr Lane Ct., P.O. Box 191970
St. Louis, Missouri 63119-7970 USA
Phone: 314-647-6200, FAX: 314-647-5736
Web Site: www.carrlane.com

(Rev. 6-08)

TWO-SIDED TOOLING BLOCKS

These economical custom blank tooling blocks are stocked as unmachined blank castings, then quickly machined to your specifications. One-piece cast aluminum alloy construction provides superior accuracy, dimensional stability, and vibration dampening.

When ordering “Machined Base with Mounting Holes,” please specify either standard JIS mounting holes (locating from two reference edges), standard DIN mounting holes (locating from center and radial holes), or a custom mounting pattern.

If ordered with “Machined Faces,” both tooling faces will be machined flat, square, and parallel to within .001" per foot. Please note: each face is machined .015" over nominal size to allow making a finish cut after mounting on your machine.

MACHINED BASE WITH MOUNTING HOLES, AND UNMACHINED FACES

PART NO.	PALLET SIZE	A	B	C	D	T	V
CL-DPA-31619.5-300-BO*	300mm	11.81	19.5	16	3	1.5	18
CL-DPA-41218-300-BO*			18	12	4		16
CL-DPA-61218-BO*				11.8	6		
CL-DPA-31619.5-400-BO*	400mm	15.75	19.5	16	3	1.5	18
CL-DPA-4819.5-BO*			19.5	8	4		18
CL-DPA-41218-400-BO*			18	12			16
CL-DPA-41520-BO*			20	15			18.5
CL-DPA-41524-BO*			24				22.5
CL-DPA-41620-BO*			20	16		1.75	18
CL-DPA-61820-BO*			20	18	6	1.5	18
CL-DPA-81520-BO			20	15.7	8		18
CL-DPA-81524-BO			24				22
CL-DPA-81528-BO			28			2.5	25.5
CL-DPA-121521-BO			21	15	12	2	19
CL-DPA-41624-BO	500mm	19.69	24	20	4	2	22.5
CL-DPA-62024-BO*			24		6	1.5	22
CL-DPA-62028-BO*			28				26
CL-DPA-81526-2.5-BO			26	15	8	2.5	23
CL-DPA-82024-BO			24	20		1.5	20
CL-DPA-82029-BO			29				25
CL-DPA-82634-BO			34	26			30
CL-DPA-102029-BO			29	20	10		26.5
CL-DPA-42424-BO*	630mm	24.80	24	24	4	1.5	22
CL-DPA-42532-BO*			32	24.8		2	30
CL-DPA-5.54039-BO			39	40	5.5	2	36
CL-DPA-62530-BO*			30	24.8	6	2	28
CL-DPA-62835-BO*			35	28			33
CL-DPA-63638-BO			38	36			36.2
CL-DPA-82530-BO			30	25	8	1.5	28
CL-DPA-102530-BO			30	25	10	1.5	28
CL-DPA-102536-BO			36				34
CL-DPA-102542-BO			42				40
CL-DPA-103036-BO			36	30		2	34
CL-DPA-122030-BO			30	20	12	1.5	28
CL-DPA-103042-BO	800mm	31.50	42	30	10	2	39.8
CL-DPA-63755-BO*	1000mm	39.37	55	37	6	2	30

UNMACHINED BLANK CASTINGS

PART NO.	PALLET SIZE	A	B	C	D	T	V
CL-DPA-31619.5-300	300mm	11.81	19.5	16	3	1.5	18
CL-DPA-41218-300			18	12	4		16
CL-DPA-61218				11.8	6		
CL-DPA-31619.5-400	400mm	15.75	19.5	16	3	1.5	18
CL-DPA-4819.5*			19.5	8	4		18
CL-DPA-41218-400*			18	12			16
CL-DPA-41520*			20	15			18.5
CL-DPA-41524*			24				22.5
CL-DPA-41620*			20	16		1.75	18
CL-DPA-61820*			20	18	6	1.5	18
CL-DPA-81520			20	15.7	8		18
CL-DPA-81524			24				22
CL-DPA-81528			28			2.5	25.5
CL-DPA-121521			21	15	12	2	19
CL-DPA-41624	500mm	19.69	34	20	4	2	22.5
CL-DPA-62024*			24		6	1.5	22
CL-DPA-62028*			28				26
CL-DPA-81526-2.5			26	15	8	2.5	23
CL-DPA-82024			24	20		1.5	20
CL-DPA-82029			29				25
CL-DPA-82634			34	26			30
CL-DPA-102029			29	20	10		26.5
CL-DPA-42424*	630mm	24.80	24	24	4	1.5	22
CL-DPA-42532*			32	24.8		2	30
CL-DPA-5.54039			39	40	5.5	2	36
CL-DPA-62530*			30	24.8	6	2	28
CL-DPA-62835*			35	28			33
CL-DPA-63638			38	36			36.2
CL-DPA-82530			30	25	8	1.5	28
CL-DPA-102530			30	25	10	1.5	28
CL-DPA-102536			36				34
CL-DPA-102542			42				40
CL-DPA-103036			36	30		2	34
CL-DPA-122030			30	20	12	1.5	28
CL-DPA-103042	800mm	31.50	42	30	10	2	39.8
CL-DPA-63755*	1000mm	39.37	55	37	6	2	30

MANUFACTURING CO.
4200 Carr Lane Ct., P.O. Box 191970
St. Louis, Missouri 63119-7970 USA
Phone: 314-647-6200, FAX: 314-647-5736
Web Site: www.carrlane.com

(Rev. 12-07)

NEW!

WINDOW TOOLING BLOCKS

A713 TENZALOY ALUMINUM ALLOY, AGED TO T-6 CONDITION

Custom Blank

Choice of three configurations:
(1) Machined base with mounting holes, and machined faces
(2) Machined base with mounting holes, and unmachined faces
(3) Unmachined blank casting

These economical custom blank tooling blocks are stocked as unmachined blank castings, then quickly machined to your specifications. One-piece cast aluminum alloy construction provides superior accuracy, dimensional stability, and vibration dampening.

When ordering “Machined Base with Mounting Holes,” please specify either standard JIS mounting holes (locating from two reference edges), standard DIN mounting holes (locating from center and radial holes), or a custom mounting pattern.

If ordered with “Machined Faces,” both tooling faces will be machined flat, square, and parallel to within .001" per foot. Please note: each face is machined .015" over nominal size to allow making a finish cut after mounting on your machine.

MACHINED BASE WITH MOUNTING HOLES, AND MACHINED FACES (INCH SIZES)

PART NO.	PALLET SIZE	A	B	C	D (+.030)	T	Y	WEIGHT (LBS)
CL-WIN-31528-BS	400mm	15.75	28	15	3.000	1.5	20.5	134
CL-WIN-41520-BS			20		4.000		9.8	134
CL-WIN-41926-BS	500mm	19.69	26	19	4.000	1.75	18.8	175
CL-WIN-41929-BS			29	19		1.5	21.5	197
CL-WIN-42633-BS			33	26		2	21	339
CL-WIN-42537-BS	630mm	24.80	37	25	4.000	2	29	363
CL-WIN-43434-BS			34	34			26	380

MACHINED BASE WITH MOUNTING HOLES, AND MACHINED FACES (METRIC SIZES)

PART NO.	PALLET SIZE	A	B	C	D (+.030)	T	Y	WEIGHT (LBS)
CL-WIN-75400710-BS	400mm	15.75	28 (710mm)	15.75 (400mm)	2.953 (75mm)	1.5	20.5	134
CL-WIN-100400500-BS			19.7 (500mm)		3.937 (100mm)		9.8	134
CL-WIN-100500725-BS	500mm	19.69	28.5 (725mm)	19.69 (500mm)	3.937 (100mm)	1.5	21.5	197
CL-WIN-100650825-BS			32.5 (825mm)	25.6 (650mm)		2	21	339
CL-WIN-100630925-BS	630mm	24.80	36.4 (925mm)	24.8 (630mm)	3.937 (100mm)	2	29	363

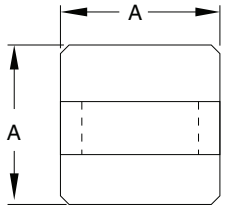

MACHINED BASE WITH MOUNTING HOLES, AND UNMACHINED FACES

PART NO.	PALLET SIZE	A	B	C	D	T	Y	WEIGHT (LBS)
CL-WIN-31528-BO	400mm	15.75	28	15	3	1.5	20.5	134
CL-WIN-41520-BO			20		4		9.8	134
CL-WIN-41926-BO	500mm	19.69	26	19	4	1.75	18.8	175
CL-WIN-41929-BO			29	19		1.5	21.5	197
CL-WIN-42633-BO			33	26		2	21	339
CL-WIN-42537-BO	630mm	24.80	37	25	4	2	29	363
CL-WIN-43434-BO			34	34			26	380

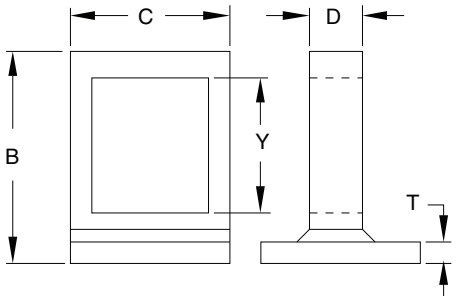

UNMACHINED BLANK CASTINGS

PART NO.	PALLET SIZE	A	B	C	D	T	Y	WEIGHT (LBS)
CL-WIN-41926	400mm	15.75	26	19	3	1.75	18.8	175
CL-WIN-31528			28	15		1.5	20.5	134
CL-WIN-41520			20		4		9.8	134
CL-WIN-41929	500mm	19.69	29	19	4	1.5	21.5	197
CL-WIN-42633			33	26		2	21	339
CL-WIN-42537	630mm	24.80	37	25	4	2	29	363
CL-WIN-43434			34	34			26	380

Carr Lane MANUFACTURING CO.®
4200 Carr Lane Ct., P.O. Box 191970
St. Louis, Missouri 63119-7970 USA
Phone: 314-647-6200, FAX: 314-647-5736
Web Site: www.carrlane.com

(Rev. 12-07)

THREE-SIDED TOOLING BLOCKS

A713 TENZALOY ALUMINUM ALLOY, AGED TO T-6 CONDITION

NEW!

Custom Blank
Choice of three configurations:
(1) Machined base with mounting holes, and machined faces (inch or metric)
(2) Machined base with mounting holes, and unmachined faces
(3) Unmachined blank casting

These economical custom blank tooling blocks are stocked as unmachined blank castings, then quickly machined to your specifications. One-piece cast aluminum alloy construction provides superior accuracy, dimensional stability, and vibration dampening.

When ordering “Machined Base with Mounting Holes,” please specify either standard JIS mounting holes (locating from two reference edges), standard DIN mounting holes (locating from center and radial holes), or a custom mounting pattern. Please specify at time of order.

If ordered with “Machined Faces,” all three tooling faces will be machined flat, square, and parallel to within .001" per foot. Please note: each face is machined .015" over nominal size to allow making a finish cut after mounting on your machine.

MACHINED BASE WITH MOUNTING HOLES, AND MACHINED FACES (INCH SIZES)

PART NO.	PALLET SIZE	A	B	C	T	X (+.015)	WEIGHT (LBS)
CL-TRI-8206-BS	400mm	15.75	20	8	2	2.309	136
CL-TRI-8236-BS			23			2.309	156
CL-TRI-8286-BS			28			2.309	189
CL-TRI-102610-BS	500mm	19.69	26	10	1.75	2.887	180
CL-TRI-122612-BS				12		3.464	203
CL-TRI-142814-BS	630mm	24.80	28	14	1.75	4.041	280

MACHINED BASE WITH MOUNTING HOLES, AND MACHINED FACES (METRIC SIZES)

PART NO.	PALLET SIZE	A	B	C	T	X (+.015)	WEIGHT (LBS)
CL-TRI-200500-BS	400mm	15.75	19.7 (500mm)	7.87 (200mm)	2	2.273	136
CL-TRI-200575-BS			22.6 (575mm)			2.273	156
CL-TRI-200700-BS			27.6 (700mm)			2.273	189
CL-TRI-250650-BS	500mm	19.69	25.6 (650mm)	9.84 (250mm)	1.8	2.841	180
CL-TRI-300650-BS				11.81 (300mm)		3.410	203
CL-TRI-350700-BS	630mm	24.80	27.6 (700mm)	13.78 (350mm)	1.8	3.978	280

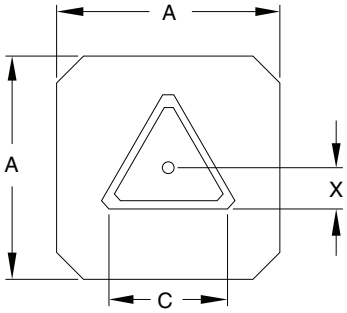

MACHINED BASE WITH MOUNTING HOLES, AND UNMACHINED FACES

PART NO.	PALLET SIZE	A	B	C	T	X	WEIGHT (LBS)
CL-TRI-8206-BO	400mm	15.75	20	8	2	2.3	136
CL-TRI-8236-BO			23			2.3	156
CL-TRI-8286-BO			28			2.3	189
CL-TRI-102610-BO	500mm	19.69	26	10	1.75	2.8	180
CL-TRI-122612-BO				12		3.4	203
CL-TRI-142814-BO	630mm	24.80	28	14	1.75	4	280

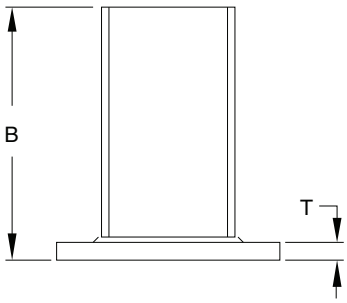

UNMACHINED BLANK CASTINGS

PART NO.	PALLET SIZE	A	B	C	T	X	WEIGHT (LBS)
CL-TRI-8206	400mm	15.75	20	8	2	2.3	136
CL-TRI-8236			23			2.3	156
CL-TRI-8286			28			2.3	189
CL-TRI-102610	500mm	19.69	26	10	1.75	2.8	180
CL-TRI-122612				12		3.4	203
CL-TRI-142814	630mm	24.80	28	14	1.75	4	280

MANUFACTURING CO.
4200 Carr Lane Ct., P.O. Box 191970
St. Louis, Missouri 63119-7970 USA
Phone: 314-647-6200, FAX: 314-647-5736
Web Site: www.carrlane.com

(Rev. 12-07)

NEW!

THREE-SIDED RELIEVED TOOLING BLOCKS

A713 TENZALOY ALUMINUM ALLOY, AGED TO T-6 CONDITION

Custom Blank
Choice of three configurations:
(1) Machined base with mounting holes, and machined faces (inch or metric)
(2) Machined base with mounting holes, and unmachined faces
(3) Unmachined blank casting

These economical custom blank tooling blocks are stocked as unmachined blank castings, then quickly machined to your specifications. One-piece cast aluminum alloy construction provides superior accuracy, dimensional stability, and vibration dampening.

When ordering "Machined Base with Mounting Holes," please specify either standard JIS mounting holes (locating from two reference edges), standard DIN mounting holes (locating from center and radial holes), or a custom mounting pattern.

If ordered with "Machined Faces," all three tooling faces will be machined flat, square, and parallel to within .001" per foot. Please note: each face is machined .015" over nominal size to allow making a finish cut after mounting on your machine.

MACHINED BASE WITH MOUNTING HOLES, AND MACHINED FACES (INCH SIZES)

PART NO.	PALLET SIZE	A	B	C	T	X (+.015)	WEIGHT (LBS)
CL-NCY-3203-BS	300mm	11.81	20	3	1.5	6.062	217
CL-NCY-4.5284.5-BS	400mm	15.75	28	4.5	1.5	6.784	338
CL-NCY-3283-BS	500mm	19.69	28	3	1.5	6.062	272
CL-NCY-6286-BS				6	2	7.506	332
CL-NCY-7287-BS				7.5	1.5	8.805	310
CL-NCY-6286-630-BS	630mm	24.80	28	6	2	7.506	402
CL-NCY-7287-630-BS				7.5		8.805	380

MACHINED BASE WITH MOUNTING HOLES, AND MACHINED FACES (METRIC SIZES)

PART NO.	PALLET SIZE	A	B	C	T	X (+.015)	WEIGHT (LBS)
CL-NCY-7550075-BS	300mm	11.81	19.7 (500mm)	2.95 (75mm)	1.5	5.967	217
CL-NCY-115700115-BS	400mm	15.75	27.6 (700mm)	4.53 (115mm)	1.5	6.649	338
CL-NCY-7570075-BS	500mm	19.69	27.6 (700mm)	2.95 (75mm)	1.5	5.967	272
CL-NCY-150700150-BS				5.91 (150mm)	2	7.387	332
CL-NCY-175700175-BS				7.48 (190mm)	1.5	9.206	310
CL-NCY-150700150-630-BS	630mm	24.80	27.6 (700mm)	5.91 (150mm)	2	7.387	402
CL-NCY-175700175-630-BS				7.48 (190mm)		9.206	380

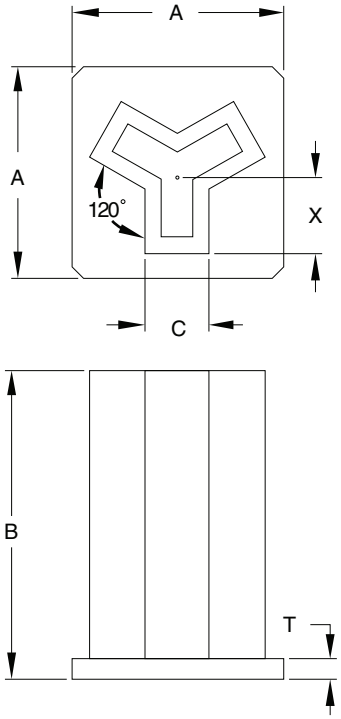

MACHINED BASE WITH MOUNTING HOLES, AND UNMACHINED FACES

PART NO.	PALLET SIZE	A	B	C	T	X	WEIGHT (LBS)
CL-NCY-3203-BO	300mm	11.81	20	3	1.5	6.06	217
CL-NCY-4.5284.5-BO	400mm	15.75	28	4.5	1.5	6.78	338
CL-NCY-3283-BO	500mm	19.69	28	3	1.5	6.06	272
CL-NCY-6286-BO				6	2	7.51	332
CL-NCY-7287-BO				7.5	1.5	8.80	310
CL-NCY-6286-630-BO	630mm	24.80	28	6	2	7.51	402
CL-NCY-7287-630-BO				7.5		8.80	380

UNMACHINED BLANK CASTINGS

PART NO.	PALLET SIZE	A	B	C	T	X	WEIGHT (LBS)
CL-NCY-3203	300mm	11.81	20	3	1.5	6.06	217
CL-NCY-4.5284.5	400mm	15.75	28	4.5	1.5	6.78	338
CL-NCY-3283	500mm	19.69	28	3	1.5	6.06	272
CL-NCY-6286				6	2	7.51	332
CL-NCY-7287				7.5	1.5	8.80	310
CL-NCY-6286-630	630mm	24.80	28	6	2	7.50	402
CL-NCY-7287-630				7.5		8.80	380

Carr Lane MANUFACTURING CO.
4200 Carr Lane Ct., P.O. Box 191970
St. Louis, Missouri 63119-7970 USA
Phone: 314-647-6200, FAX: 314-647-5736
Web Site: www.carrlane.com

(Rev. 2-10)

FOUR-SIDED TOOLING BLOCKS

NEW!

A713 TENZALOY ALUMINUM ALLOY, AGED TO T-6 CONDITION

Custom Blank

Choice of three configurations:
(1) Machined base with mounting holes, and machined faces (inch or metric)
(2) Machined base with mounting holes, and unmachined faces
(3) Unmachined blank casting

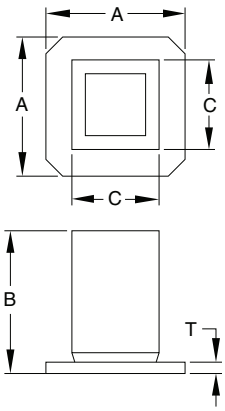

MACHINED BASE WITH MOUNTING HOLES, AND MACHINED FACES (INCH SIZES)

PART NO.	PALLET SIZE	A	B	C (+.030)	T
CL-NCB-4264-300-BS	300mm	11.81	26	4.000	1.5
CL-NCB-5185-300-BS			18	5.000	
CL-NCB-5225-300-BS			22		
CL-NCB-9.2149.2-BS			18	10.000	
CL-NCB-4264-400-BS	400mm	15.75	26	4.000	1.5
CL-NCB-5185-400-BS			18	5.000	
CL-NCB-5225-400-BS			22		
CL-NCB-6186-BS			18	6.000	
CL-NCB-6266-BS			26		
CL-NCB-8188-BS			18	8.000	
CL-NCB-8248-400-BS			24		
CL-NCB-8288-400-BS			28		
CL-NCB-101810-BS			18	10.000	
CL-NCB-102410-400-BS			24		
CL-NCB-102810-400-BS			28		
CL-NCB-121812-400-BS			18	12.000	
CL-NCB-122412-400-BS			24		
CL-NCB-122812-400-BS			28		
CL-NCB-8248-500-BS	500mm	19.69	24	8.000	1.5
CL-NCB-8288-500-BS			28		
CL-NCB-102410-500-BS			24	10.000	
CL-NCB-102810-500-BS			28		
CL-NCB-103410-20-BS			34		
CL-NCB-121812-500-BS			18	12.000	
CL-NCB-122412-500-BS			24		
CL-NCB-122812-500-BS			28		
CL-NCBR-132513-BS*			25	13.000	
CL-NCBR-162416-500-BS*			24	16.000	
CL-NCBR-162816-500-BS*			28		
CL-NCB-103110-BS	630mm	24.80	31	10.000	1.75
CL-NCB-123212-630-BS			32	12.000	1.5
CL-NCBR-142214-BS*			22	14.000	1.75
CL-NCBR-143014-BS*			30		
CL-NCBR-162416-630-BS*			24	16.000	1.5
CL-NCBR-163816-630-BS*			28		
CL-NCBR-163816-BS*			38		
CL-NCBR-182418-BS*			24	18.000	1.5
CL-NCBR-182818-BS*			28		
CL-NCBR-183818-BS*			38		
CL-NCBR-223822-BS*			38	22.000	2
CL-NCBR-242824-BS*	800mm	31.50	28	24.000	2
CL-NCBR-243624-BS*			36		
CL-NCBR-243824-BS*			38		
CL-NCBR-244224-BS*			42		
CL-NCBR-325532-BS*	1000mm	39.37	55	32.000	2
CL-NCBR-375537-BS*			55	37.000	2.5

MACHINED BASE WITH MOUNTING HOLES, AND MACHINED FACES (METRIC SIZES)

PART NO.	PALLET SIZE	A	B	C (+.030)	T
CL-NCB-100650100-300-BS	300mm	11.81	25.6 (650mm)	3.937 (100mm)	1.5
CL-NCB-125450125-300-BS			17.7 (450mm)	4.921 (125mm)	
CL-NCB-125550125-300-BS			21.7 (550mm)		
CL-NCB-100650100-400-BS	400mm	15.75	25.6 (650mm)	3.937 (100mm)	1.5
CL-NCB-125450125-400-BS			17.7 (450mm)	4.921 (125mm)	
CL-NCB-125550125-400-BS			21.7 (550mm)		
CL-NCB-150450150-BS			17.7 (450mm)	5.906 (150mm)	
CL-NCB-150650150-BS			25.6 (650mm)		
CL-NCB-200450200-BS			17.7 (450mm)	7.874 (200mm)	
CL-NCB-200600200-400-BS			23.6 (600mm)		
CL-NCB-200700200-400-BS			27.6 (700mm)		
CL-NCB-250450250-BS			17.7 (450mm)	9.843 (250mm)	
CL-NCB-250600250-400-BS			23.6 (600mm)		
CL-NCB-250700250-400-BS			27.6 (700mm)		
CL-NCB-300450300-400-BS			17.7 (450mm)	11.811 (300mm)	
CL-NCB-300600300-400-BS			23.6 (600mm)		
CL-NCB-300700300-400-BS			27.6 (700mm)		
CL-NCB-200600200-500-BS	500mm	19.69	23.6 (600mm)	7.874 (200mm)	1.5
CL-NCB-200700200-500-BS			27.6 (700mm)		
CL-NCB-250600250-500-BS			23.6 (600mm)	9.843 (250mm)	
CL-NCB-250700250-500-BS			27.6 (700mm)		
CL-NCB-300450300-500-BS			17.7 (450mm)	11.811 (300mm)	
CL-NCB-300600300-500-BS			23.6 (600mm)		
CL-NCB-300700300-500-BS			27.6 (700mm)		
CL-NCBR-400600400-500-BS			23.6 (600mm)	15.748 (400mm)	
CL-NCBR-400700400-500-BS			27.6 (700mm)		
CL-NCB-250780250-BS	630mm	24.80	30.7 (780mm)	9.843 (250mm)	1.8
CL-NCB-300810300-BS			31.9 (810mm)	11.811 (300mm)	1.5
CL-NCBR-350550350-BS*			21.7 (550mm)	13.780 (350mm)	1.8
CL-NCBR-350750350-BS*			29.5 (750mm)		
CL-NCBR-400600400-630-BS*			23.6 (600mm)	15.748 (400mm)	1.5
CL-NCBR-400700400-630-BS*			27.6 (700mm)		
CL-NCBR-400950400-BS*			37.4 (950mm)		
CL-NCBR-450600450-BS*			23.6 (600mm)	17.717 (450mm)	1.5
CL-NCBR-450700450-BS*			27.6 (700mm)		
CL-NCBR-450950450-BS*			37.4 (950mm)		
CL-NCBR-550950550-BS*			37.4 (950mm)	21.654 (550mm)	2
CL-NCBR-600700600-BS*	800mm	31.50	27.6 (700mm)	23.622 (600mm)	2
CL-NCBR-600900600-BS*			35.4 (900mm)		
CL-NCBR-600950600-BS*			37.4 (950mm)		
CL-NCBR-6001050600-BS*			41.3 (1050mm)		
CL-NCBR-8001400800-BS*	1000mm	39.37	55.1 (1400mm)	31.496 (800mm)	2
CL-NCBR-9501400950-BS*			55.1 (1400mm)	37.402 (950mm)	2.5

*These sizes have internal ribbing.

Carr Lane®
MANUFACTURING CO.
4200 Carr Lane Ct., P.O. Box 191970
St. Louis, Missouri 63119-7970 USA
Phone: 314-647-6200, FAX: 314-647-5736
Web Site: www.carrlane.com

(Rev. 12-07)

FOUR-SIDED TOOLING BLOCKS

These economical custom blank tooling blocks are stocked as unmachined blank castings, then quickly machined to your specifications. One-piece cast aluminum alloy construction provides superior accuracy, dimensional stability, and vibration dampening.

When ordering “Machined Base with Mounting Holes,” please specify either standard JIS mounting holes (locating from two reference edges), standard DIN mounting holes (locating from center and radial holes), or a custom mounting pattern.

If ordered with “Machined Faces,” all four tooling faces will be machined flat, square, and parallel to within .001" per foot. Please note: each face is machined .015" over nominal size to allow making a finish cut after mounting on your machine.

MACHINED BASE WITH MOUNTING HOLES, AND UNMACHINED FACES

PART NO.	PALLET SIZE	A	B	C	T
CL-NCB-4264-300-BO	300mm	11.81	26	4	1.5
CL-NCB-5185-300-BO			18	5	
CL-NCB-5225-300-BO			22		
CL-NCB-9.2149.2-BO			18	10	
CL-NCB-4264-400-BO	400mm	15.75	26	4	1.5
CL-NCB-5185-400-BO			18	5	
CL-NCB-5225-400-BO			22		
CL-NCB-6186-BO			18	6	
CL-NCB-6266-BO			26		
CL-NCB-8188-BO			18	8	
CL-NCB-8248-400-BO			24		
CL-NCB-8288-300-BO			28		
CL-NCB-101810-BO			18	10	
CL-NCB-102410-400-BO			24		
CL-NCB-102810-400-BO			28		
CL-NCB-121812-400-BO			18	12	
CL-NCB-122412-400-BO			24		
CL-NCB-122812-400-BO			28		
CL-NCB-8248-500-BO	500mm	19.69	24	8	1.5
CL-NCB-8288-500-BO			28		
CL-NCB-102410-500-BO			24	10	
CL-NCB-102810-500-BO			28		
CL-NCB-103410-20-BO			34		
CL-NCB-121812-500-BO			18	12	
CL-NCB-122412-500-BO			24		
CL-NCB-122812-500-BO			28		
CL-NCBR-132513-BO*			25	13	
CL-NCBR-162416-500-BO*			24	16	
CL-NCBR-162816-500-BO*			28		
CL-NCB-103110-BO	630mm	24.80	31	10	1.75
CL-NCB-123212-630-BO			32	12	1.5
CL-NCBR-142214-BO*			22	14	1.75
CL-NCBR-143014-BO*			30		
CL-NCBR-162416-630-BO*			24	16	1.5
CL-NCBR-163816-630-BO*			28		
CL-NCBR-163816-BO*			38		
CL-NCBR-182418-BO*			24	18	1.5
CL-NCBR-182818-BO*			28		
CL-NCBR-183818-BO*			38		
CL-NCBR-223822-BO*			38	22	2
CL-NCBR-242824-BO*	800mm	31.50	28	24	2
CL-NCBR-243624-BO*			36		
CL-NCBR-243824-BO*			38		
CL-NCBR-244224-BO*			42	24	
CL-NCBR-325532-BO*	1000mm	39.37	55	32	2
CL-NCBR-375537-BO*			55	37	2.5

UNMACHINED BLANK CASTINGS

PART NO.	PALLET SIZE	A	B	C	T
CL-NCB-4264-300	300mm	11.81	26	4	1.5
CL-NCB-5185-300			18	5	
CL-NCB-5225-300			22		
CL-NCB-9.21492			18	10	
CL-NCB-4264-400	400mm	15.75	26	4	1.5
CL-NCB-5185-400			18	5	
CL-NCB-5225-400			22		
CL-NCB-6186			18	6	
CL-NCB-6266			26		
CL-NCB-8188			18	8	
CL-NCB-8248-400			24		
CL-NCB-8288-300			28		
CL-NCB-101810			18	10	
CL-NCB-102410-400			24		
CL-NCB-102810-400			28		
CL-NCB-121812-400			18	12	
CL-NCB-122412-400			24		
CL-NCB-122812-400			28		
CL-NCB-8248-500	500mm	19.69	24	8	1.5
CL-NCB-8288-500			28		
CL-NCB-102410-500			24	10	
CL-NCB-102810-500			28		
CL-NCB-103410-20			34		
CL-NCB-121812-500			18	12	
CL-NCB-122412-500			24		
CL-NCB-122812-500			28		
CL-NCBR-132513*			25	13	
CL-NCBR-162416-500*			24	16	
CL-NCBR-162816-500*			28		
CL-NCB-103110	630mm	24.80	31	10	1.75
CL-NCB-123212-630			32	12	1.5
CL-NCBR-142214*			22	14	1.75
CL-NCBR-143014*			30		
CL-NCBR-162416-630*			24	16	1.5
CL-NCBR-163816-630*			28		
CL-NCBR-163816*			38		
CL-NCBR-182418*			24	18	1.5
CL-NCBR-182818*			28		
CL-NCBR-183818*			38		
CL-NCBR-223822*			38	22	2
CL-NCBR-242824*	800mm	31.50	28	24	2
CL-NCBR-243624*			36		
CL-NCBR-243824*			38		
CL-NCBR-244224*			42	24	
CL-NCBR-325532*	1000mm	39.37	55	32	2
CL-NCBR-375537*			55	37	2.5

Carr Lane®
MANUFACTURING CO.
4200 Carr Lane Ct., P.O. Box 191970
St. Louis, Missouri 63119-7970 USA
Phone: 314-647-6200, FAX: 314-647-5736
Web Site: www.carrlane.com

(Rev. 12-07)

NEW!

FOUR-SIDED RELIEVED TOOLING BLOCKS

A713 TENZALOY ALUMINUM ALLOY, AGED TO T-6 CONDITION

Custom Blank

Choice of three configurations:
(1) Machined base with mounting holes, and machined faces (inch or metric)
(2) Machined base with mounting holes, and unmachined faces
(3) Unmachined blank casting

These economical custom blank tooling blocks are stocked as unmachined blank castings, then quickly machined to your specifications. One-piece cast aluminum alloy construction provides superior accuracy, dimensional stability, and vibration dampening.

When ordering "Machined Base with Mounting Holes," please specify either standard JIS mounting holes (locating from two reference edges), standard DIN mounting holes (locating from center and radial holes), or a custom mounting pattern.

If ordered with "Machined Faces," both tooling faces will be machined flat, square, and parallel to within .001" per foot. Please note: each face is machined .015" over nominal size to allow making a finish cut after mounting on your machine.

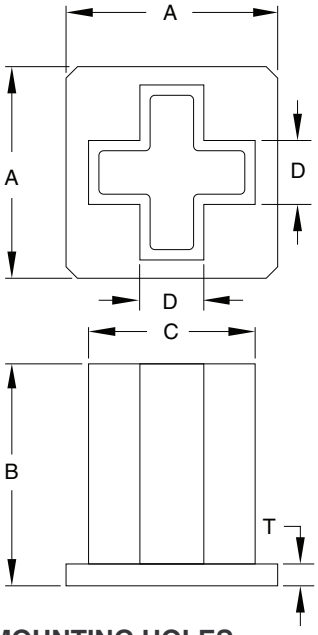

MACHINED BASE WITH MOUNTING HOLES, AND MACHINED FACES (INCH SIZES)

PART NO.	PALLET SIZE	A	B	C (+.030)	D	T	WEIGHT (LBS)
CL-NCX-4248-BS	300mm	11.81	24	8.000	4	1.5	151
CL-NCX-10286-400-BS	400mm	15.75	28	10.000	6	2	270
CL-NCX-10286-500-BS	500mm	19.69	28	10.000	6	2	270
CL-NCX-12284-BS			28	12.000	4		313
CL-NCX-6246-BS			24		6		225
CL-NCX-6286-500-BS			28				285
CL-NCX-6346-20-BS			34				335
CL-NCX-6386-BS			38				330
CL-NCX-8288-BS			28	12.000	8		350
CL-NCX-6286-630-BS	630mm	24.80	28	12.000	6	2	285
CL-NCX-8388-BS			38	12.000	8		423
CL-NCX-R8368-BS			36	20.000			730

MACHINED BASE WITH MOUNTING HOLES, AND MACHINED FACES (METRIC SIZES)

PART NO.	PALLET SIZE	A	B	C (+.030)	D	T	WEIGHT (LBS)
CL-NCX-250700150-400-BS	400mm	15.75	27.6 (700mm)	9.843 (250mm)	5.9 (150mm)	1.97 (50mm)	270
CL-NCX-250700150-500-BS	500mm	19.69	27.6 (700mm)	9.843 (250mm)	5.9 (150mm)	1.97 (50mm)	270
CL-NCX-150600150-BS			23.6 (600mm)	11.811 (300mm)			225
CL-NCX-150700150-500-BS			27.6 (700mm)				285
CL-NCX-150950150-BS			37.4 (950mm)				330
CL-NCX-200700200-BS			27.6 (700mm)	11.811 (300mm)	7.9 (200mm)		350
CL-NCX-150700150-630-BS	630mm	24.80	27.6 (700mm)	11.811 (300mm)	5.9 (150mm)	1.97 (50mm)	285
CL-NCX-200950200-BS			37.4 (950mm)	11.811 (300mm)	7.9 (200mm)		423
CL-NCX-R200900200-BS			35.4 (900mm)	19.685 (500mm)			730

MACHINED BASE WITH MOUNTING HOLES, AND UNMACHINED FACES

PART NO.	PALLET SIZE	A	B	C	D	T	WEIGHT (LBS)
CL-NCX-4248-BO	300mm	11.81	24	8	4	1.5	151
CL-NCX-10286-400-BO	400mm	15.75	28	10	6	2	270
CL-NCX-10286-500-BO	500mm	19.69	28	10	6	2	270
CL-NCX-12284-BO			28	12			313
CL-NCX-6246-BO			24				225
CL-NCX-6286-500-BO			28				285
CL-NCX-6346-20-BO			34				335
CL-NCX-6386-BO			38				330
CL-NCX-8288-BO			28	12	8		350
CL-NCX-6286-630-BO	630mm	24.80	28	12	6	2	285
CL-NCX-8388-BO			38	12	8		423
CL-NCX-R8368-BO			36	20			730

UNMACHINED BLANK CASTINGS

PART NO.	PALLET SIZE	A	B	C	D	T	WEIGHT (LBS)
CL-NCX-4248	300mm	11.81	24	8	4	1.5	151
CL-NCX-10286-400	400mm	15.75	28	10	6	2	270
CL-NCX-10286-500	500mm	19.69	28	10	6	2	270
CL-NCX-12284			28				313
CL-NCX-6246			24	12			225
CL-NCX-6286-500			28				285
CL-NCX-6346-20			34				335
CL-NCX-6386			38				330
CL-NCX-8288			28	12	8		350
CL-NCX-6286-630	630mm	24.80	28	12	6	2	285
CL-NCX-8388			38	12	8		423
CL-NCX-R8368			36	20			730

Carr Lane®
MANUFACTURING CO.
4200 Carr Lane Ct., P.O. Box 191970
St. Louis, Missouri 63119-7970 USA
Phone: 314-647-6200, FAX: 314-647-5736
Web Site: www.carrlane.com

(Rev. 10-07)

NEW!

FOUR-SIDED ROTARY TOOLING BLOCKS

A713 TENZALOY ALUMINUM ALLOY, AGED TO T-6 CONDITION

Custom Blank

Choice of three configurations:
(1) Machined base with mounting holes, and machined faces (inch or metric)
(2) Machined base with mounting holes, and unmachined faces
(3) Unmachined blank casting

This four-sided tooling block is ideal for rotary indexers and rotary machine tables. These economical custom blank tooling blocks are stocked as unmachined blank castings, then quickly machined to your specifications. One-piece cast aluminum alloy construction provides superior accuracy, dimensional stability, and vibration dampening.

When ordering "Machined Base with Mounting Holes," please specify mounting pattern.

If ordered with "Machined Faces," all four tooling faces will be machined flat, square, and parallel to within .001" per foot. Please note: each face is machined .015" over nominal size to allow making a finish cut after mounting on your machine.

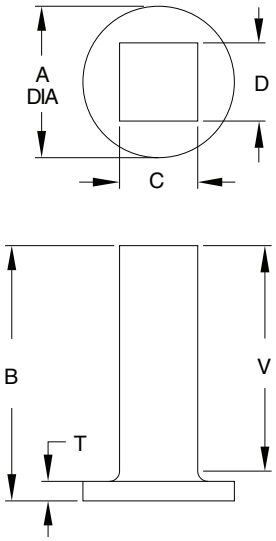

MACHINED BASE WITH MOUNTING HOLES, AND MACHINED FACES (METRIC SIZES)

PART NO.	BLOCK SIZE	A DIA	B	C (+.030)	D (+.030)	T	V	WEIGHT (LBS)
CL-NCB-75525150RB-BS	75mm x 150mm	6.50 (165mm)	20.7 (525mm)	2.953 (75mm)	5.906 (150mm)	1.5	17.7	48
CL-NCB-100300100RB-BS	100mm x 100mm	5.91 (150mm)	11.8 (300mm)	3.937 (100mm)	3.937 (100mm)	1.2	10.8	27
CL-NCB-100500100RB-BS		11.81 (300mm)	19.7 (500mm)			1.5	17.7	45
CL-NCB-100700100RB-BS		14.76 (375mm)	27.6 (700mm)				26	87
CL-NCB-150500150RB-BS	150mm x 150mm	11.81 (300mm)	19.7 (500mm)	5.906 (150mm)	5.906 (150mm)	1.5	17.7	90
CL-NCB-150925150RB-BS			36.4 (925mm)				33.5	170
CL-NCB-1501900150RB-BS		8.86 (225mm)	74.8 (1900mm)				73.8	345

MACHINED BASE WITH MOUNTING HOLES, AND MACHINED FACES (INCH SIZES)

CL-NCB-3216RB-BS	3x6	6.5	21	3.000	6.000	1.5	18	48
CL-NCB-4124RB-BS	4x4	6	12	4.000	4.000	1	11	27
CL-NCB-4204RB-BS		12	20			1.5	18	45
CL-NCB-4284RB-BS		15	28				26	87
CL-NCB-6206RB-BS	6x6	12	20	6.000	6.000	1.5	18	90
CL-NCB-6376RB-BS		12	37				34	170
CL-NCB-6756-9RB-BS		9	75				73	345

MACHINED BASE WITH MOUNTING HOLES, AND UNMACHINED FACES (METRIC BASE DIAMETER)

CL-NCB-75525150RB-BO	75mm x 150mm	6.50 (165mm)	20.7 (525mm)	2.95 (75mm)	5.91 (150mm)	1.5	17.7	48
CL-NCB-100300100RB-BO	100mm x 100mm	5.91 (150mm)	11.8 (300mm)	3.94 (100mm)	3.94 (100mm)	1.2	10.8	27
CL-NCB-100500100RB-BO		11.81 (300mm)	19.7 (500mm)			1.5	17.7	45
CL-NCB-100700100RB-BO		14.76 (375mm)	27.6 (700mm)				26	87
CL-NCB-150500150RB-BO	150mm x 150mm	11.81 (300mm)	19.7 (500mm)	5.91 (150mm)	5.91 (150mm)	1.5	17.7	90
CL-NCB-150925150RB-BO			36.4 (925mm)				33.5	170
CL-NCB-1501900150RB-BO		8.86 (225mm)	74.8 (1900mm)				73.8	345

MACHINED BASE WITH MOUNTING HOLES, AND UNMACHINED FACES (INCH BASE DIAMETER)

CL-NCB-3216RB-BO	3x6	6.5	21	3	6	1.5	18	48
CL-NCB-4124RB-BO	4x4	6	12	4	4	1	11	27
CL-NCB-4204RB-BO		12	20			1.5	18	45
CL-NCB-4284RB-BO		15	28				26	87
CL-NCB-6206RB-BO	6x6	12	20	6	6	1.5	18	90
CL-NCB-6376RB-BO		12	37				34	170
CL-NCB-6756-9RB-BO		9	75				73	345

UNMACHINED BLANK CASTINGS

CL-NCB-3216RB	3x6	6.5	21	3	6	1.5	18	48
CL-NCB-4124RB	4x4	6	12	4	4	1	11	27
CL-NCB-4204RB		12	20			1.5	18	45
CL-NCB-4284RB		15	28				26	87
CL-NCB-6206RB	6x6	12	20	6	6	1.5	18	90
CL-NCB-6376RB		12	37				34	170
CL-NCB-6756-9RB		9	75				73	345

Carr Lane®
MANUFACTURING CO.
4200 Carr Lane Ct., P.O. Box 191970
St. Louis, Missouri 63119-7970 USA
Phone: 314-647-6200, FAX: 314-647-5736
Web Site: www.carrlane.com

(Rev. 10-07)

NEW!

SIX-SIDED TOOLING BLOCKS

A713 TENZALOY ALUMINUM ALLOY, AGED TO T-6 CONDITION

Custom Blank

Choice of three configurations:
(1) Machined base with mounting holes, and machined faces
(2) Machined base with mounting holes, and unmachined faces
(3) Unmachined blank casting

These economical custom blank tooling blocks are stocked as unmachined blank castings, then quickly machined to your specifications. One-piece cast aluminum alloy construction provides superior accuracy, dimensional stability, and vibration dampening.

When ordering "Machined Base with Mounting Holes," please specify either standard JIS mounting holes (locating from two reference edges), standard DIN mounting holes (locating from center and radial holes), or a custom mounting pattern.

If ordered with "Machined Faces," all six tooling faces will be machined flat, square, and parallel to within .001" per foot. Please note: each face is machined .015" over nominal size to allow making a finish cut after mounting on your machine.

MACHINED BASE WITH MOUNTING HOLES, AND MACHINED FACES (METRIC SIZES)

PART NO.	PALLET SIZE	A	B	C	T	X (+.015)	WEIGHT (LBS)
CL-HXB-105300105-400-BS	400mm	15.75	11.81 (300mm)	4.13 (1025mm)	1.5	3.580	76
CL-HXB-105450105-BS			17.7 (450mm)				92
CL-HXB-200600200-500-BS	500mm	19.69	23.6 (600mm)	7.87 (200mm)	1.5	6.819	220
CL-HXB-200700200-500-BS			27.6 (700mm)				255
CL-HXB-225700225-BS	630mm	24.80	27.6 (700mm)	8.86 (225mm)	1.8	7.671	467
CL-HXB-2001270200-800-BS	800mm	31.50	50 (1270mm)	7.87 (200mm)	2	6.819	370
CL-HXB-2001270200-BS	1000mm	39.37	50 (1270mm)	7.87 (200mm)	2	6.819	376

MACHINED BASE WITH MOUNTING HOLES, AND MACHINED FACES (INCH SIZES)

PART NO.	PALLET SIZE	A	B	C	T	X (+.015)	WEIGHT (LBS)
CL-HXB-4124-400-BS	400mm	15.75	12	4.25	1.5	3.681	76
CL-HXB-4184-BS			16				92
CL-HXB-8248-20-BS	500mm	19.69	24	8	1.5	6.928	220
CL-HXB-8288-20-BS			28				255
CL-HXB-9289-BS	630mm	24.80	28	9	1.75	7.794	467
CL-HXB-8508-800-BS	800mm	31.50	50	8	2	6.928	370
CL-HXB-8508-BS	1000mm	39.37	50	8	2	6.928	376

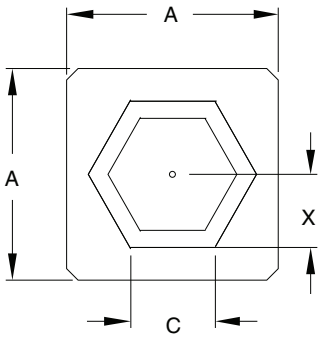

MACHINED BASE WITH MOUNTING HOLES, AND UNMACHINED FACES

PART NO.	PALLET SIZE	A	B	C	T	X	WEIGHT (LBS)
CL-HXB-4124-400-BO	400mm	15.75	12	4.25	1.5	3.68	76
CL-HXB-4184-BO			16				92
CL-HXB-8248-20-BO	500mm	19.69	24	8	1.5	6.93	220
CL-HXB-8288-20-BO			28				255
CL-HXB-9289-BO	630mm	24.80	28	9	1.75	7.79	467
CL-HXB-8508-800-BO	800mm	31.50	50	8	2	6.93	370
CL-HXB-8508-BO	1000mm	39.37	50	8	2	6.93	376

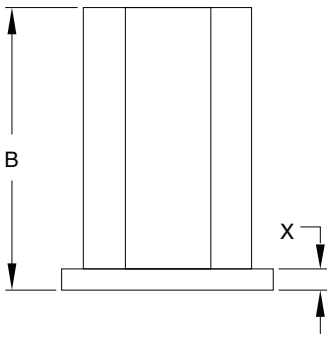

UNMACHINED BLANK CASTINGS

PART NO.	PALLET SIZE	A	B	C	T	X	WEIGHT (LBS)
CL-HXB-4124-400	400mm	15.75	12	4.25	1.5	3.68	76
CL-HXB-4184			16				92
CL-HXB-8248-20	500mm	19.69	24	8	1.5	6.93	220
CL-HXB-8288-20			28				255
CL-HXB-9289	630mm	24.80	28	9	1.75	7.79	467
CL-HXB-8508	800mm & 1000mm	39.37	50	8	2	6.93	376

Carr Lane MANUFACTURING CO.
4200 Carr Lane Ct., P.O. Box 191970
St. Louis, Missouri 63119-7970 USA
Phone: 314-647-6200, FAX: 314-647-5736
Web Site: www.carrlane.com

(Rev. 10-07)

EIGHT-SIDED TOOLING BLOCKS

NEW!

A713 TENZALOY ALUMINUM ALLOY, AGED TO T-6 CONDITION

Custom Blank

Choice of three configurations:
(1) Machined base with mounting holes, and machined faces
(2) Machined base with mounting holes, and unmachined faces
(3) Unmachined blank casting

These economical custom blank tooling blocks are stocked as unmachined blank castings, then quickly machined to your specifications. One-piece cast aluminum alloy construction provides superior accuracy, dimensional stability, and vibration dampening.

When ordering "Machined Base with Mounting Holes," please specify either standard JIS mounting holes (locating from two reference edges), standard DIN mounting holes (locating from center and radial holes), or a custom mounting pattern.

If ordered with "Machined Faces," all eight tooling faces will bemachined flat, square, and parallel to within .001" per foot. Please note: each face is machined .015" over nominal size to allow making a finish cut after mounting on your machine.

MACHINED BASE WITH MOUNTING HOLES, AND MACHINED FACES (METRIC SIZES)

PART NO.	PALLET SIZE	A DIA	B	C	T	X (+.015)	WEIGHT (LBS)
CL-OCT-100500250-BS	400mm	15.75	19.7 (500mm)	3.94 (100mm)	1.8	4.921 (125mm)	160
CL-OCT-110500280-400-BS				4.33 (110mm)	1.5	5.512 (140mm)	145
CL-OCT-110500280-500-BS	500mm	19.69	19.7 (500mm)	4.33 (110mm)	1.5	5.512 (140mm)	145
CL-OCT-125575400-BS			22.6 (575mm)	4.92 (125mm)	1.8	5.906 (150mm)	240
CL-OCT-150600390-BS	630mm	24.80	23.6 (600mm)	5.91 (150mm)	1.5	7.874 (200mm)	270
CL-OCT-150700390-BS			27.6 (700mm)			7.874 (200mm)	295

MACHINED BASE WITH MOUNTING HOLES, AND MACHINED FACES (INCH SIZES)

PART NO.	PALLET SIZE	A DIA	B	C	T	X (+.015)	WEIGHT (LBS)
CL-OCT-42010-BS	400mm	15.75	20	4	1.8	5.000	160
CL-OCT-42011-400-BS				4.5	1.5	5.500	145
CL-OCT-42011-500-BS	500mm	19.69	20	4.5	1.5	5.500	145
CL-OCT-52312-BS			23	5	1.8	6.000	240
CL-OCT-62415-BS	630mm	24.80	24	6	1.5	7.500	270
CL-OCT-62815-BS			28				295

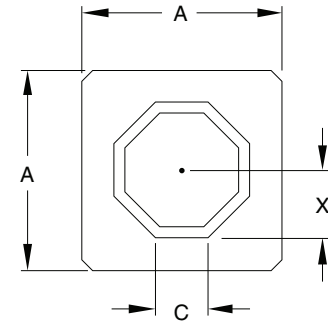

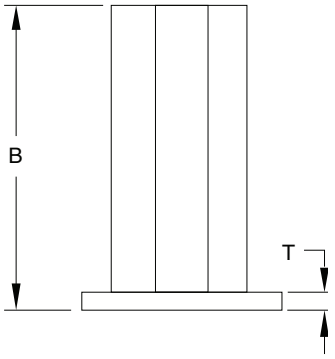

MACHINED BASE WITH MOUNTING HOLES, AND UNMACHINED FACES

PART NO.	PALLET SIZE	A DIA	B	C	T	X	WEIGHT (LBS)
CL-OCT-42010-BO	400mm	15.75	20	4	1.8	5	160
CL-OCT-42011-400-BO				4.5	1.5	5.5	145
CL-OCT-42011-500-BO	500mm	19.69	20	4.5	1.5	5.5	145
CL-OCT-52312-BO			23	5	1.8	6	240
CL-OCT-62415-BO	630mm	24.80	24	6	1.5	7.5	270
CL-OCT-62815-BO			28				295

UNMACHINED BLANK CASTINGS

PART NO.	PALLET SIZE	A DIA	B	C	T	X	WEIGHT (LBS)
CL-OCT-42010	400mm	15.75	20	4	1.8	5	160
CL-OCT-42011-400				4.5	1.5	5.5	145
CL-OCT-42011-500	500mm	19.69	20	4.5	1.5	5.5	145
CL-OCT-52312			23	5	1.8	6	240
CL-OCT-62415	630mm	24.80	24	6	1.5	7.5	270
CL-OCT-62815			28				295

Carr Lane®
MANUFACTURING CO.
4200 Carr Lane Ct., P.O. Box 191970
St. Louis, Missouri 63119-7970 USA
Phone: 314-647-6200, FAX: 314-647-5736
Web Site: www.carrlane.com

(Rev. 8-98)

ANGLE BRACKETS

STEEL: ASTM A36, BLACK OXIDE FINISH
ALUMINUM: 6061-T6

Precision setup angles machined flat and perpendicular to close tolerances. Available in steel or high-strength aluminum.

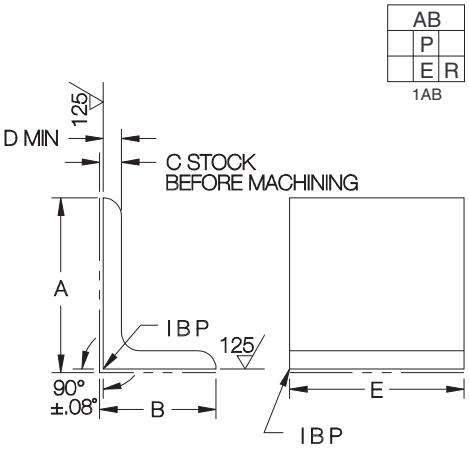

PART NO. STEEL	PART NO. ALUMINUM	A	B	C	D	E
CL-1-AB	—	2-1/2	2	1/4	7/32	1-1/2
CL-2-AB	CL-2-AB-A	2	2	3/8	5/16	2
CL-21-AB	—					3
CL-3-AB	CL-3-AB-A					4
CL-4-AB	—					6
CL-3A-AB	CL-3A-AB-A	3	2			2
CL-3B-AB	—					3
CL-22-AB	—					4
CL-5-AB	—	3	3			2
CL-6-AB	—					3
CL-7-AB	—					4
CL-23-AB	—					6
CL-8-AB	—	4	4			4
CL-9-AB	—	3	3	1/2	7/16	2
CL-10-AB	CL-10-AB-A					3
CL-11-AB	—					4
CL-7A-AB	—	4	3			2
CL-7B-AB	—					3
CL-12-AB	CL-12-AB-A	4	4			3
CL-13-AB	CL-13-AB-A					4
CL-14-AB	—					5
CL-24-AB	—					6
CL-15-AB	CL-15-AB-A	6	4			4
CL-16-AB	—					5
CL-17-AB	CL-17-AB-A					6
CL-18-AB	—	6	6			4
CL-19-AB	—					5
CL-20-AB	CL-20-AB-A					6

GUSSETED ANGLE BRACKETS

STEEL: ASTM A36, BLACK OXIDE FINISH
ALUMINUM: 6061-T6

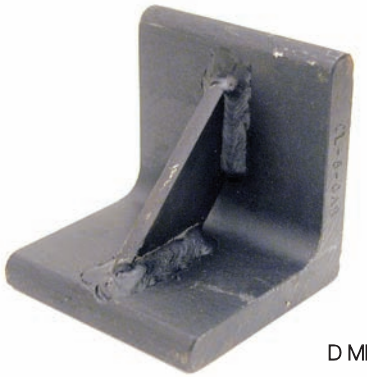

Similar to the Angle Brackets shown above, except with a gusset for added strength. Available in steel or high-strength aluminum.

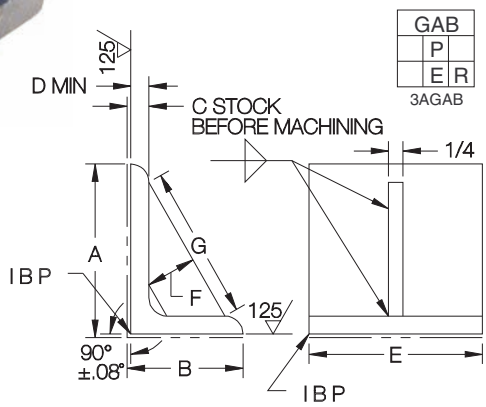

PART NO. STEEL	PART NO. ALUMINUM	A	B	C	D	E	F	G
CL-3A-GAB	—	3	2	3/8	5/16	2	7/8	2-3/4
CL-3B-GAB	—					3		
CL-1-GAB	—	3	3			2	1	3-7/16
CL-2-GAB	—					3		
CL-3-GAB	—					4		
CL-4-GAB	—	4	4			3	1	4-13/16
CL-5-GAB	—					4		
CL-6-GAB	—					5		
CL-7-GAB	—	3	3	1/2	7/16	2	1	3-1/4
CL-8-GAB	CL-8-GAB-A					3		
CL-9-GAB	—					4		
CL-7A-GAB	—	4	3			2	1-1/4	3-7/8
CL-7B-GAB	—					3		
CL-10-GAB	CL-10-GAB-A	4	4			3	1	4-5/8
CL-11-GAB	CL-11-GAB-A					4		
CL-12-GAB	—					5		
CL-13-GAB	CL-13-GAB-A	6	4			4	1-1/2	6-1/4
CL-14-GAB	—					5		
CL-15-GAB	CL-15-GAB-A					6		
CL-16-GAB	—	6	6			4	1-1/2	7-7/16
CL-17-GAB	—					5		
CL-18-GAB	CL-18-GAB-A					6		

Carr Lane®
MANUFACTURING CO.
4200 Carr Lane Ct., P.O. Box 191970
St. Louis, Missouri 63119-7970 USA
Phone: 314-647-6200, FAX: 314-647-5736
Web Site: www.carrlane.com

(Rev. 8-98)

ANGLE BRACKETS WITH LOCATING HOLES

ASTM A36 STEEL, BLACK OXIDE FINISH

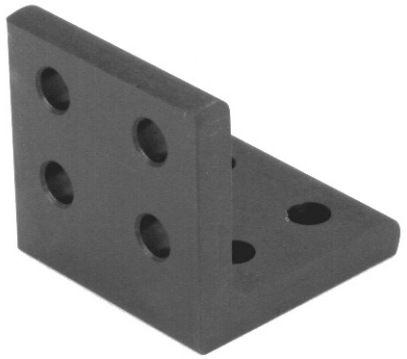

Angle Bracket

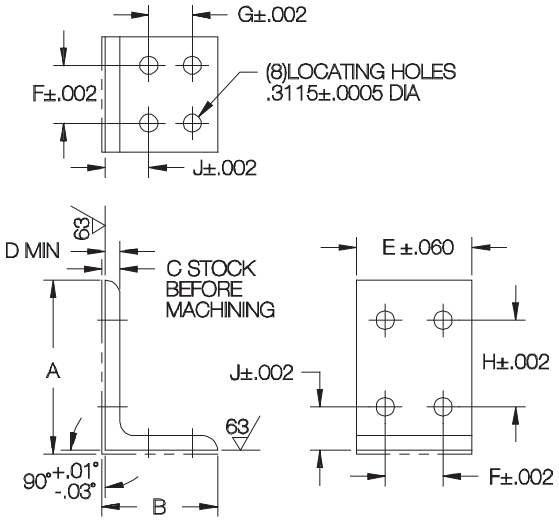

Extremely accurate angle brackets with precision locating holes. These angles are ideal for bolting together like an erector set to create large-scale tooling. The 90° angle and (8) locating holes are machined to close tolerances to maintain good accuracy in built-up tooling. Use with the precision locating bolts shown below.

ANGLE BRACKETS

PART NO. STEEL	A	B	C	D	E	F	G	H	J
CL-1531-ABK	2	2	3/8	1/4	2	1.000	.750	.750	.750
CL-1532-ABK	3	2						1.500	
CL-1535-ABK	2	2			4	3.000		.750	
CL-1539-ABK	3	3	1/2	3/8	3	2.000	1.250	1.250	1.125
CL-1533-ABK	4	4					2.000	2.000	1.000
CL-15310-ABK	4	4			4	3.000	2.000	2.000	1.125
CL-1534-ABK	6	4					1.500	3.500	1.500
CL-1536-ABK	6	6					3.500		
CL-1538-ABK	6	4	5/8	1/2	6	5.000	1.500	3.500	1.500
CL-1537-ABK	6	6					3.500		

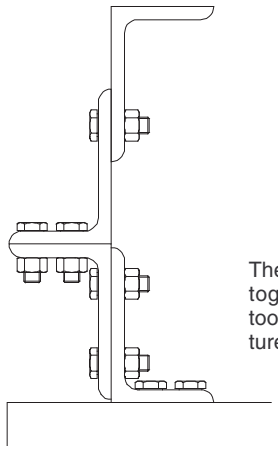

These high-precision angles can be bolted together to build economical large-scale tooling. Ideal for assembly and welding fixtures.

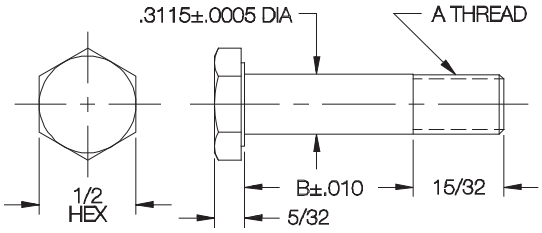

Angle Bracket Locating Bolt

Hex Nut

Precision bolts for fastening angle brackets to each other, and to other tooling. Ground locating diameter provides a slight press fit when angles are bolted together. Steel.

ANGLE BRACKET LOCATING BOLTS AND HEX NUTS

PART NO. LOCATING BOLT	PART NO. HEX NUT	A	B
CL-506-ABLB	CL-5-FHN	5/16-24	.375
CL-508-ABLB			.500
CL-510-ABLB			.625
CL-512-ABLB			.750
CL-516-ABLB			1.000
CL-520-ABLB			1.250
CL-524-ABLB			1.500

Carr Lane®
MANUFACTURING CO.
4200 Carr Lane Ct., P.O. Box 191970
St. Louis, Missouri 63119-7970 USA
Phone: 314-647-6200, FAX: 314-647-5736
Web Site: www.carrlane.com

(Rev. 6-06)

ADJUSTABLE ANGLES

1018 STEEL, BLACK OXIDE FINISH
PATENT NO. 3,039,570

Plain

Precision angle with accurately machined sides and a close-tolerance hinge. Available either plain, with tabs for welding on a gusset, or with a removable pivot pin.

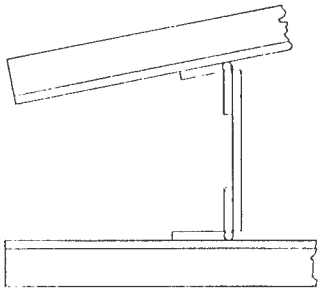

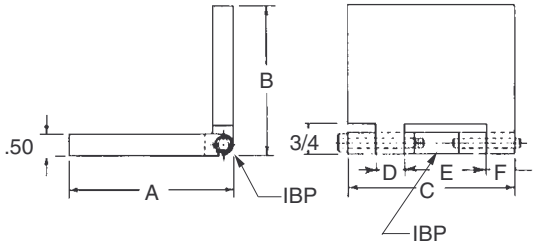

PLAIN

PART NO.	A	B	C	D	E	F
CL-AA-4P	3	3	3	5/8	1-1/8	5/8
CL-AA-3P			4	3/4	1-3/4	3/4
CL-AA-2P	4	3	4	3/4	1-3/4	3/4
CL-AA-1P		4				

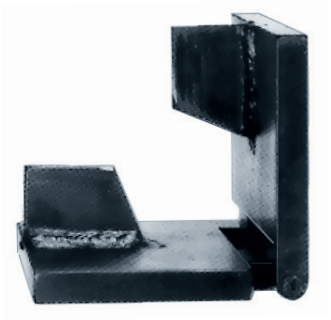

Gusseted

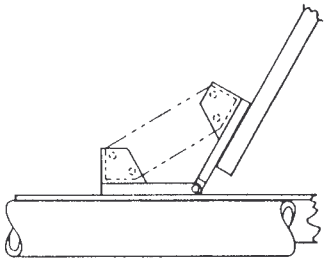

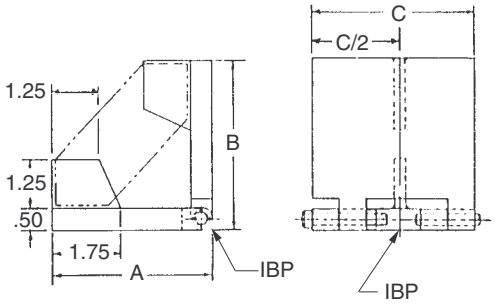

GUSSETED

PART NO.	A	B	C	D	E	F
CL-AA-4G	3	3	3	5/8	1-1/8	5/8
CL-AA-1G	4	4	4	3/4	1-3/4	3/4

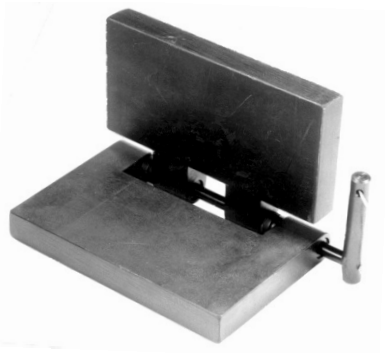

Removable Pin

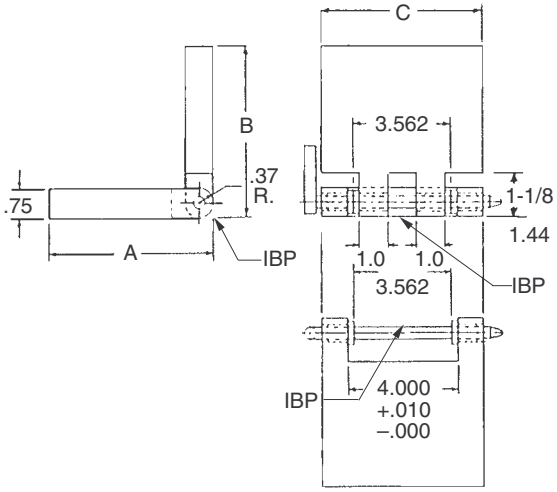

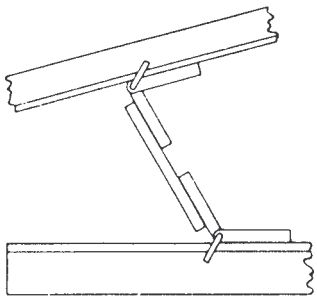

REMOVABLE PIN

PART NO.	A	B	C
CL-AA-2R	4	4	6
CL-AA-1R	6	6	

Carr Lane®
MANUFACTURING CO.
4200 Carr Lane Ct., P.O. Box 191970
St. Louis, Missouri 63119-7970 USA
Phone: 314-647-6200, FAX: 314-647-5736
Web Site: www.carrlane.com

(Rev. 12-07)

CAST SECTIONS

CAST IRON: ASTM CLASS 40, TENSILE STRENGTH 40,000 TO 45,000 PSI
ALUMINUM: 319, TENSILE STRENGTH 30,000 PSI

Fast, economical way to make special fixture components. All surfaces are machined square and parallel within .005 inches per foot, except ends. Internal faces on square and rectangular sections are unfinished. All dimensions ±1/32 (except length, which is -1/16 to +1/8).

Available in whole lengths (usually 25 inches) or cut to any length desired. Specify length in inches. Example: CL-1-CST-6.00 (6-inch-long T section).

Cast Iron

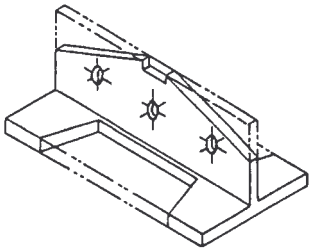

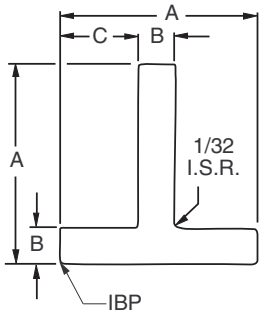

T SECTIONS

PART NO. CAST IRON	A	B	C	MAX LENGTH
CL-1-CST-xx.xx	3	5/8	1-3/16	25 In.
CL-2-CST-xx.xx	4	3/4	1-5/8	
CL-3-CST-xx.xx	5		2-1/8	
CL-4-CST-xx.xx	6	1	2-1/2	
CL-5-CST-xx.xx	8	1-1/4	3-3/8	

Cast Iron

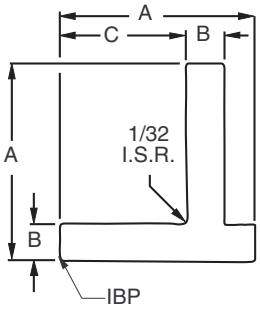

OFFSET T SECTIONS (UNEQUAL)

PART NO. CAST IRON	A	B	C	MAX LENGTH
CL-3-CUT-xx.xx	5	3/4	3-1/4	25 In.
CL-4-CUT-xx.xx	6	1	3-1/2	
CL-5-CUT-xx.xx	8	1-1/4	4-7/8	

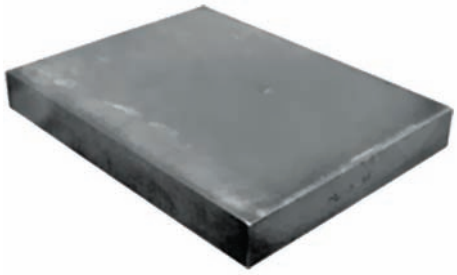

Cast Iron

FLAT SECTIONS

PART NO. CAST IRON	A	B	MAX LENGTH
CL-4-CF-xx.xx	6	1	25 In.
CL-5-CF-xx.xx	8	1-1/4	

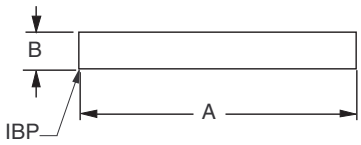

CarrLane MANUFACTURING CO.
4200 Carr Lane Ct., P.O. Box 191970
St. Louis, Missouri 63119-7970 USA
Phone: 314-647-6200, FAX: 314-647-5736
Web Site: www.carrlane.com

CAST SECTIONS

SEE PAGE 279 FOR MATERIAL SPECIFICATIONS AND TOLERANCES

Cast Iron and Aluminum

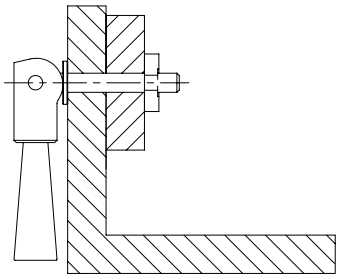

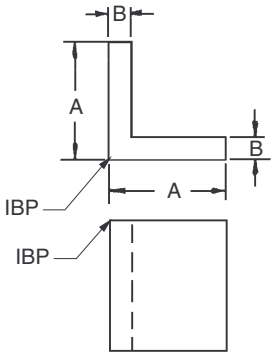

L SECTIONS

PART NO. CAST IRON	PART NO. ALUMINUM	A	B	MAX. LENGTH
CL-1-CSA-xx.xx	CL-1-CAA-xx.xx	3	5/8	25 In.
CL-2-CSA-xx.xx	CL-2-CAA-xx.xx	4	3/4	
CL-3-CSA-xx.xx	CL-3-CAA-xx.xx	5		
CL-4-CSA-xx.xx	—	6	1	
CL-5-CSA-xx.xx	—	8	1-1/4	

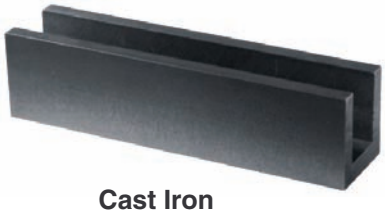

Cast Iron and Aluminium

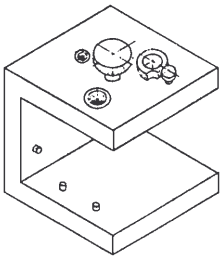

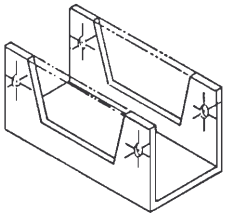

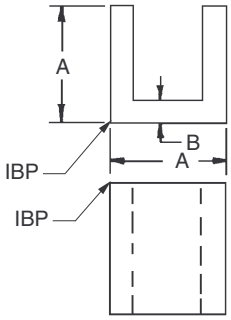

U SECTIONS

PART NO. CAST IRON	PART NO. ALUMINUM	A	B	MAX. LENGTH
CL-1-CSU-xx.xx	—	1-3/4	3/8	19 In.
CL-2-CSU-xx.xx	—	2-1/2	1/2	
CL-3-CSU-xx.xx	CL-1-CAU-xx.xx	3	5/8	25 In.
CL-4-CSU-xx.xx	CL-2-CAU-xx.xx	4	3/4	
CL-5-CSU-xx.xx	CL-3-CAU-xx.xx	5		
CL-6-CSU-xx.xx	—	6	1	
CL-7-CSU-xx.xx	—	8	1-1/4	

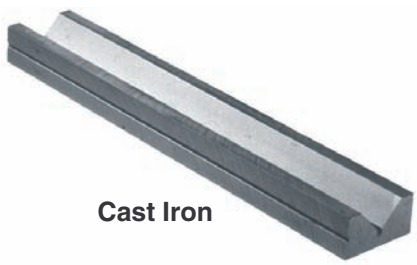

Cast Iron

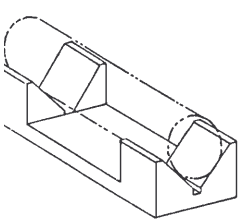

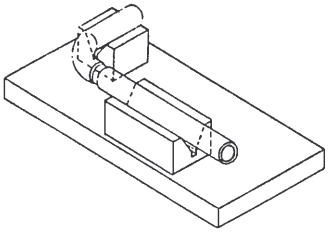

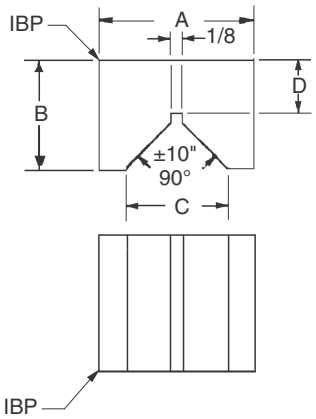

V SECTIONS

PART NO. CAST IRON	A	B	C	D	MAX. LENGTH
CL-1-CSV-xx.xx	2	1	1-1/4	5/16	18 In.
CL-2-CSV-xx.xx	3	1-3/4	2	11/16	
CL-3-CSV-xx.xx	4	2-1/2	3	7/8	

Carr Lane®
MANUFACTURING CO.
4200 Carr Lane Ct., P.O. Box 191970
St. Louis, Missouri 63119-7970 USA
Phone: 314-647-6200, FAX: 314-647-5736
Web Site: www.carrlane.com

(Rev. 12-07)

CAST SECTIONS

SEE PAGE 279 FOR MATERIAL SPECIFICATIONS AND TOLERANCES

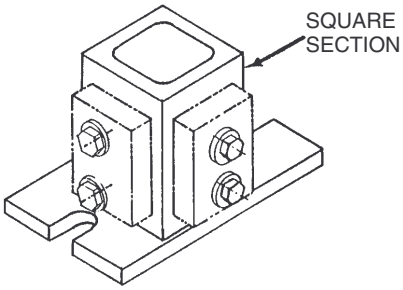

Cast Iron

SQUARE SECTIONS

PART NO. CAST IRON	A	B	MAX. LENGTH
CL-1-CSS-xx.xx	3	1/2	25 In.
CL-2-CSS-xx.xx	4	5/8	
CL-3-CSS-xx.xx	6	3/4	
CL-4-CSS-xx.xx	8	1	

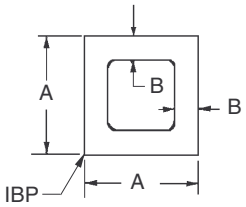

Cast Iron

RECTANGULAR SECTIONS

PART NO. CAST IRON	A	B	C	MAX. LENGTH
CL-1-CSR-xx.xx	4	6	5/8	25 In.
CL-2-CSR-xx.xx	6	8	3/4	
CL-3-CSR-xx.xx	8	10	1	

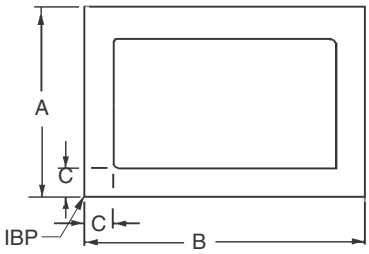

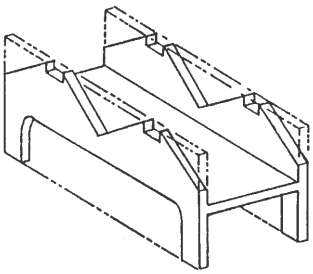

Cast Iron

H SECTIONS

PART NO. CAST IRON	A	B	C	MAX. LENGTH
CL-2-CSH-xx.xx	4	1-5/8	3/4	25 In.
CL-3-CSH-xx.xx	5	2-1/16	7/8	
CL-4-CSH-xx.xx	6	2-1/2	1	
CL-5-CSH-xx.xx	8	3-3/8	1-1/4	

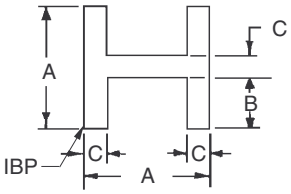

Carr Lane®
MANUFACTURING CO.
4200 Carr Lane Ct., P.O. Box 191970
St. Louis, Missouri 63119-7970 USA
Phone: 314-647-6200, FAX: 314-647-5736
Web Site: www.carrlane.com

(Rev. 12-07)

LIFT-N-C™ JIGS

BODY & LID: CAST IRON PER ASTM CLASS 40, GREEN ENAMEL PAINT

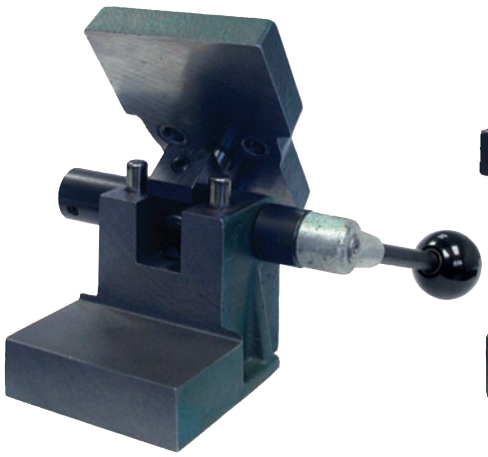

Open for Loading

Closed

Locked

The Lift-N-C Jig gets its name for the way the top plate lifts up and opens wide for easy loading (lift 'n see). Simply install drill bushings in the top plate and locators in the base to make a finished jig. Choice of two sizes.

The handle operates a sturdy, durable rack-and-pinion mechanism that lifts the top plate and tilts it back. Pulling the handle forward pivots the plate forward, parallel to base. Precision bushings and pins align plate with base for excellent repeatability.

Pulling the handle completely forward lowers top plate into firm contact with the workpiece, locking top plate securely (Note: The top plate does not exert downward force unless pressure is applied manually with handle). Handle mounts on either side.

For tapping operations, workpieces can be drilled in the "locked" position, then easily tapped in the "loading" position.

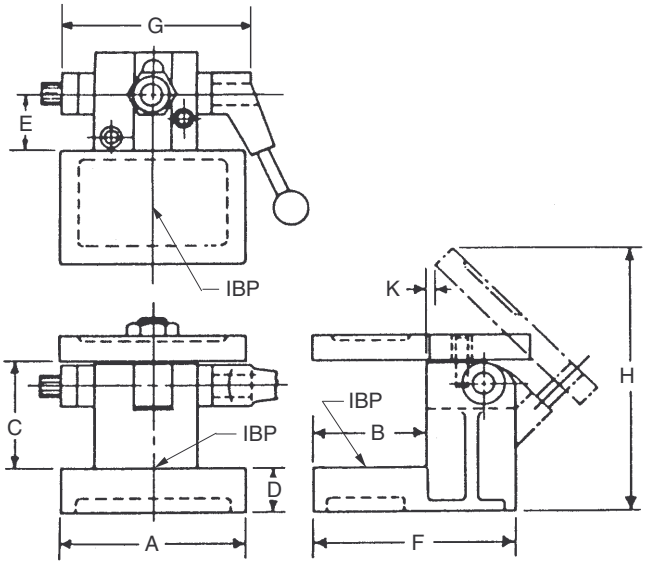

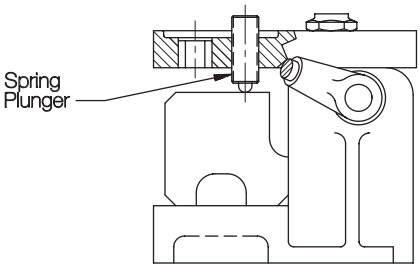

A Spring Plunger, page 116, can be installed in the Top Plate to exert clamping force on the workpiece.

LIFT-N-C JIGS

PART NO.	A	B	C MINIMUM	C MAXIMUM	D	E	F	G	H	K	REPLACEMENT RACK & PINION
CL-301-NCJ	3-5/16	2	2	2-1/4	1-1/16	1-1/4	4-1/4	4-3/4	6-1/4	3/16	CL-34-RAP
CL-401-NCJ	4-3/16	2-1/2	2-1/2	2-3/4	1-1/16	1-1/4	4-1/2	4-3/4	6-3/4	3/16	

Additional Top Plates

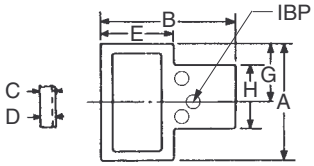

ADDITIONAL TOP PLATES

PART NO.	A	B	C	D	E	G	H
CL-301-TP	3	4-3/8	1/2	5/8	2	1-1/2	2-1/4
CL-401-TP	4-3/16	4-7/8	1/2	5/8	2-1/2	2-3/32	2-1/4

Carr Lane MANUFACTURING CO.
4200 Carr Lane Ct., P.O. Box 191970
St. Louis, Missouri 63119-7970 USA
Phone: 314-647-6200, FAX: 314-647-5736
Web Site: www.carrlane.com

(Rev. 12-07)

TRUNNIONS

ARM: TENZALOY ALUMINUM ALLOY
BODY: ALUMINUM WITH BRONZE BEARINGS
PATENT NO. 3,129,937

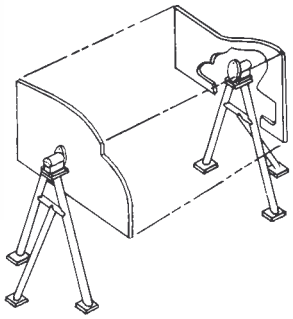

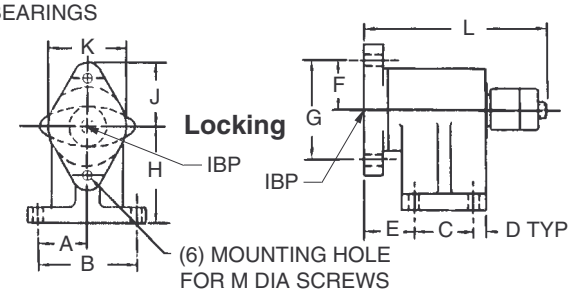

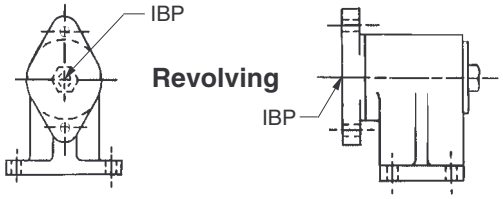

Trunnions are rugged, precision bearing mounts for revolving fixtures. Usually used in pairs, one locking, one revolving. Locking version locks securely at any rotation angle, using a friction cone (twist handle to lock).

LOCKING

PART NO.	LOAD CAPACITY (18" from face)	A	B	C	D	E	F	G	H	J	K	L	M
CL-1-TL	1800 lbs	2	4	2-3/8	1/2	1-7/8	2	4	4	2-5/8	3-1/4	7	3/8 or M10
CL-2-TL	2500 lbs	2-7/8	5-3/4	3-3/8	3/4	2-5/8	2-13/16	5-5/8	5-1/4	3-3/4	4-1/4	9	5/8 or M16

REVOLVING

CL-1-TR	1800 lbs	2	4	2-3/8	1/2	1-7/8	2	4	4	2-5/8	3-1/4	5-7/16	3/8 or M10
CL-2-TR	2500 lbs	2-7/8	5-3/4	3-3/8	3/4	2-5/8	2-13/16	5-5/8	5-1/4	3-3/4	4-1/4	7-5/8	5/8 or M16

SPHERICAL TRUNNIONS

ARM: TENZALOY ALUMINUM ALLOY
BODY: ALUMINUM WITH BRONZE BEARINGS

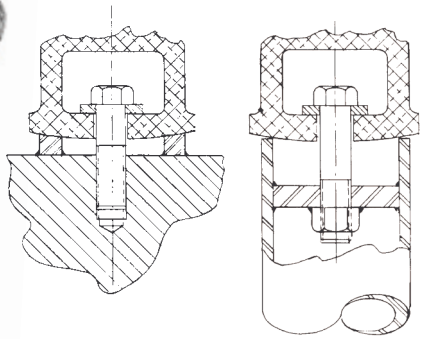

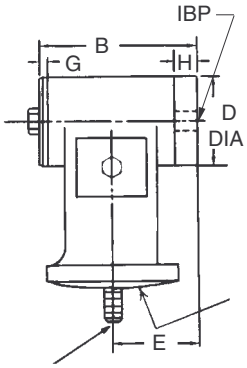

MOUNTING HOLE FOR
M DIA SCREW
(NOT INCLUDED)

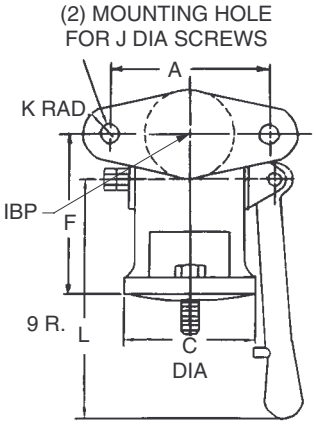

Ideal for mounting on pipe frames.
Lock by lowering handle.

LOCKING

PART NO.	LOAD CAPACITY (18" from face)	A	B	C DIA	D DIA	E	F	G	H	J	K	L	M
CL-5-TL	1800 lbs	4	5-1/16	3-1/2	3-1/4	2-3/4	4-3/16	5/16	13/16	3/8 or M10	9/16	9	5/8 or M16
CL-6-TL	2500 lbs	5-5/8	7	5-1/8	4-1/4	4	5-5/8	1/4	1-1/8	5/8 or M16	1	12-1/4	1 or M24

Carr Lane®
MANUFACTURING CO.
4200 Carr Lane Ct., P.O. Box 191970
St. Louis, Missouri 63119-7970 USA
Phone: 314-647-6200, FAX: 314-647-5736
Web Site: www.carrlane.com

(Rev. 03-10)

TECHNICAL INFORMATION
ADJUSTABLE LOCKING HUBS

TYPES AVAILABLE

Heavy-Duty—Stainless Steel Two Round Ends
Page 285

Heavy-Duty—Stainless Steel Two Mounting Flanges
Page 286

Heavy-Duty—Stainless Steel Mounting Flange & Round End
Page 287

Medium-Duty—Thermoplastic Two Square Ends
Page 288

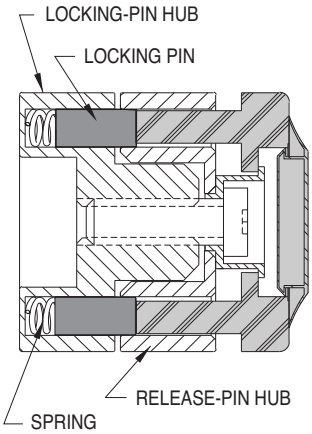

Locked

In locked position, the locking-pin hub and release-pin hub are positively engaged by high-strength locking pins.

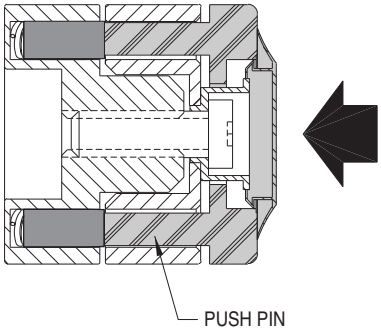

Unlocked

When the release button is pressed, against spring force, push pins force the locking pins to disengage. The hub is now free to rotate. After reaching the desired angle, releasing the button again allows the locking pins to extend back into locked position.

APPLICATION EXAMPLES

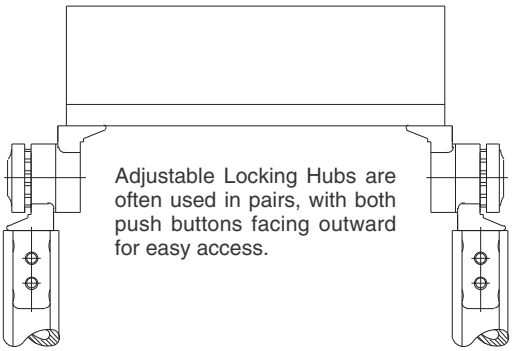

Adjustable Locking Hubs are often used in pairs, with both push buttons facing outward for easy access.

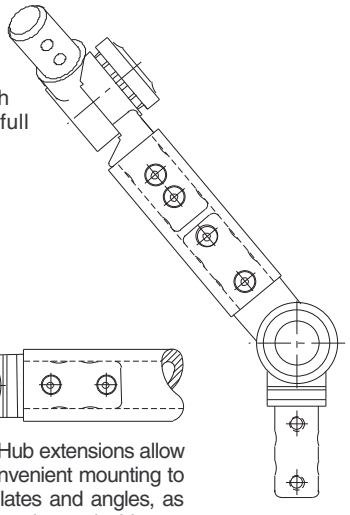

Connect two Adjustable Locking Hubs at 90° (with pipe or tubing) for full 5-axis positioning.

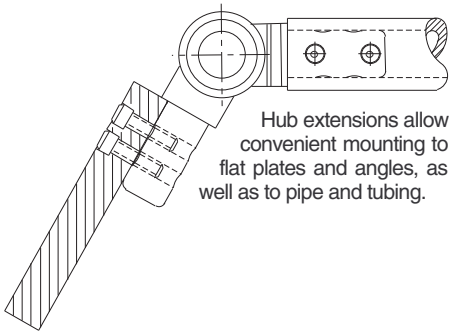

Hub extensions allow convenient mounting to flat plates and angles, as well as to pipe and tubing.

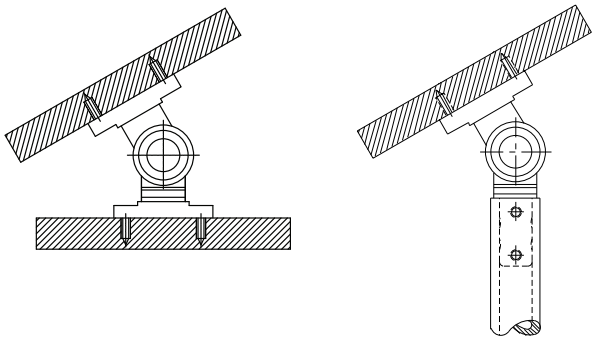

Mounting flanges are ideal for attaching Adjustable Locking Hubs to flat surfaces. Heavy-duty hubs are available with either two mounting flanges, or one mounting flange and one round end.

Carr Lane®
MANUFACTURING CO.
4200 Carr Lane Ct., P.O. Box 191970
St. Louis, Missouri 63119-7970 USA
Phone: 314-647-6200, FAX: 314-647-5736
Web Site: www.carrlane.com

(12-07)

ADJUSTABLE LOCKING HUBS

BODY: 300-SERIES STAINLESS STEEL, ELECTRO POLISHED. PINS: 416 STAINLESS STEEL, HEAT TREATED
RELEASE BUTTON: BLACK THERMOPLASTIC.
US PATENT NO. 5,586, 363 AND 5,689,999. OTHER PATENTS PENDING.

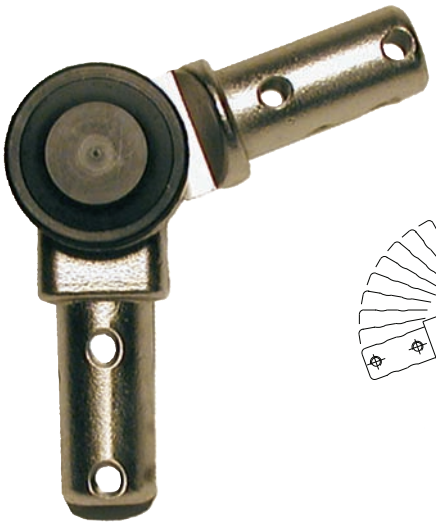

Heavy Duty—
Stainless Steel
Two Round Ends
Inline
(220° Adjustment)

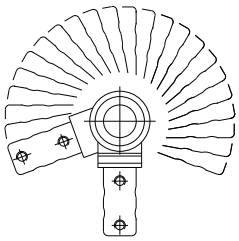

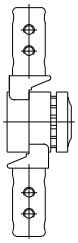

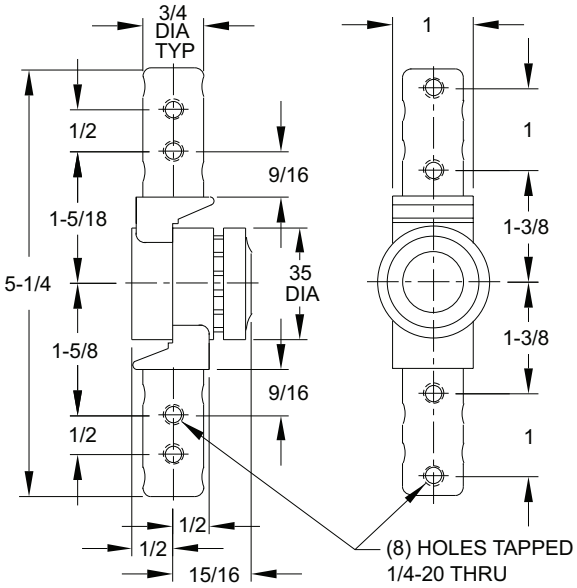

Adjustable Locking Hubs are rotary bearings that provide positive locking at any 10° increment. Once locked, the hub becomes an absolutely rigid joint, able to withstand 80 ft.-lbs. of torque (5:1 safety factor). Round Hub extensions fit 3/4" ID pipe or tubing. The tapped mounting holes can also be used to attach a plate or angle. Applications include adjustable fixtures, rotating fixtures, welding fixtures, trunnion mounting, adjustable and/or foldable handles, adjustable part trays and shelves, adjustable and/or flip-up work surfaces, positive positioning of spotlights or nozzles, and collapsable structures. Also available in alloy steel with a black finish (CL-100-ALH).

INLINE (220° ADJUSTMENT)

PART NO.	TOTAL ADJUSTMENT RANGE	ADJUSTMENT INCREMENTS	ALLOWABLE TORQUE (FT-LB)
CL-100-ALH-S	220°	10°	80

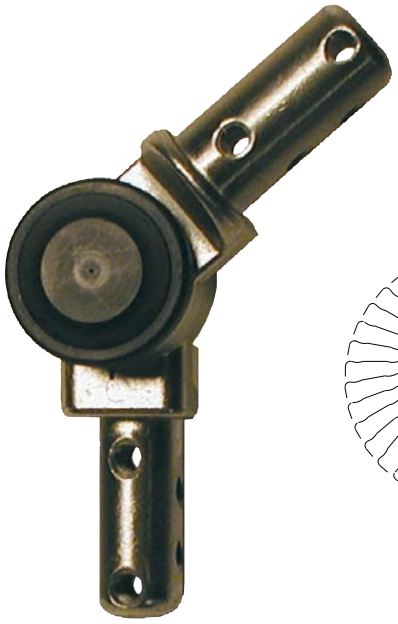

Heavy Duty—
Stainless Steel
Two Round Ends
Offset
(360° Rotation)

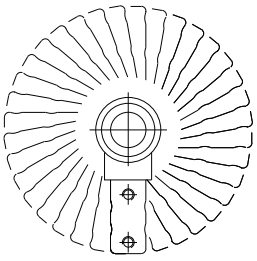

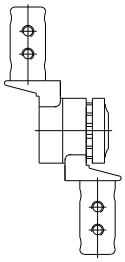

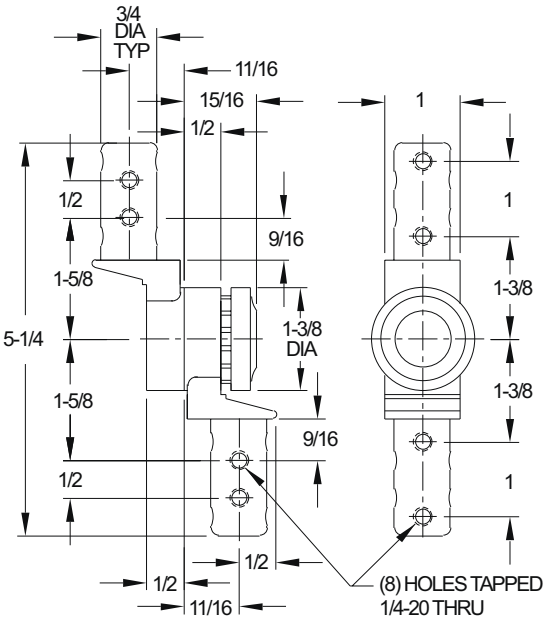

Similar to the locking hub above, except hub extensions are offset to allow full 360° rotation. Offset locking hubs should usually be used in pairs, to avoid off-center loading on a single hub. Make sure that rotating loads are balanced and avoid any possible pinch points, in case hubs are suddenly unlocked and the load is allowed to rotate freely.

OFFSET (360° ROTATION)

PART NO.	TOTAL ADJUSTMENT RANGE	ADJUSTMENT INCREMENTS	ALLOWABLE TORQUE (FT-LB)
CL-101-ALH-S	360°	10°	80

Carr Lane®
MANUFACTURING CO.
4200 Carr Lane Ct., P.O. Box 191970
St. Louis, Missouri 63119-7970 USA
Phone: 314-647-6200, FAX: 314-647-5736
Web Site: www.carrlane.com

(12-07)

ADJUSTABLE LOCKING HUBS

BODY: 300-SERIES STAINLESS STEEL, ELECTRO POLISHED. PINS: 416 STAINLESS STEEL, HEAT TREATED
RELEASE BUTTON: BLACK THERMOPLASTIC.
US PATENT NO. 5,586, 363 AND 5,689,999. OTHER PATENTS PENDING.

Heavy Duty—
Stainless Steel
Two Mounting Flanges
Inline
(180° Adjustment)

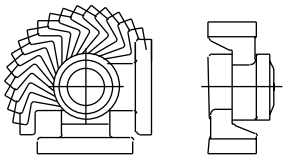

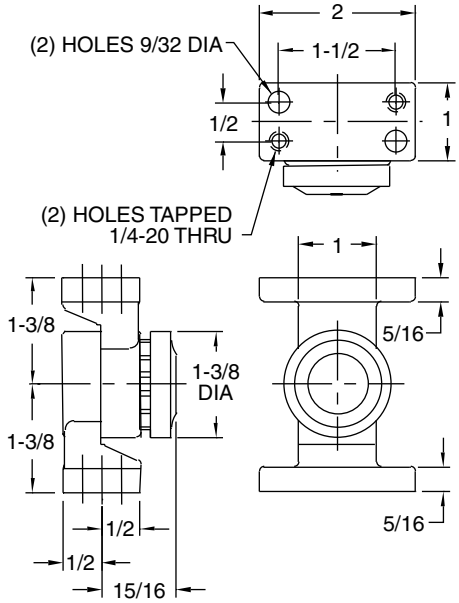

Adjustable Locking Hubs are rotary bearings that provide positive locking at any 10° increment. Once locked, the hub becomes an absolutely rigid joint, able to withstand 80 ft.-lbs. of torque (5:1 safety factor). Mounting flanges provide two mounting options: (1) two 1/4-20 tapped holes allow fastening an object to the mounting flange; (2) two 9/32 dia clearance holes for 1/4" screws allow fastening the mounting flange to a surface. Applications include adjustable fixtures, rotating fixtures, welding fixtures, trunnion mounting, adjustable and/or foldable handles, adjustable part trays and shelves, adjustable and/or flip-up work surfaces, positive positioning of spotlights or nozzles, and collapsable structures.

INLINE (220° ADJUSTMENT)

PART NO.	TOTAL ADJUSTMENT RANGE	ADJUSTMENT INCREMENTS	ALLOWABLE TORQUE (FT-LB)
CL-120-ALH-S	180°	10°	80

Heavy Duty—
Stainless Steel
Two Mounting Flanges
Offset
(360° Rotation)

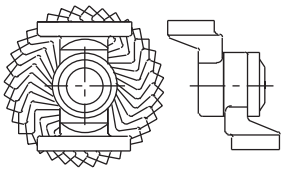

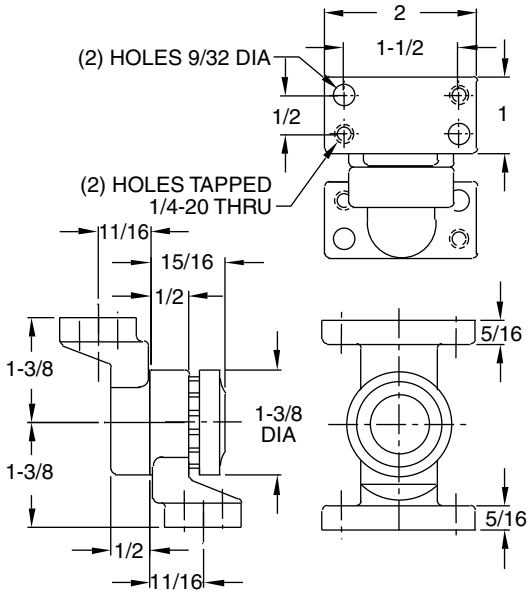

Similar to the locking hub above, except hub extensions are offset to allow full 360° rotation. Offset locking hubs should usually be used in pairs, to avoid off-center loading on a single hub. Make sure that rotating loads are balanced and avoid any possible pinch points, in case hubs are suddenly unlocked and the load is allowed to rotate freely.

OFFSET (360° ROTATION)

PART NO.	TOTAL ADJUSTMENT RANGE	ADJUSTMENT INCREMENTS	ALLOWABLE TORQUE (FT-LB)
CL-121-ALH-S	360°	10°	80

MANUFACTURING CO.
4200 Carr Lane Ct., P.O. Box 191970
St. Louis, Missouri 63119-7970 USA
Phone: 314-647-6200, FAX: 314-647-5736
Web Site: www.carrlane.com

(12-07)

ADJUSTABLE LOCKING HUBS

BODY: 300-SERIES STAINLESS STEEL, ELECTRO POLISHED. PINS: 416 STAINLESS STEEL, HEAT TREATED
RELEASE BUTTON: BLACK THERMOPLASTIC.
US PATENT NO. 5,586,363 AND 5,689,999. OTHER PATENTS PENDING.

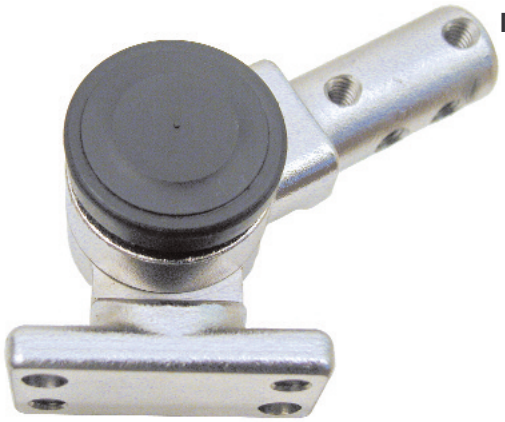

**Heavy Duty—
Stainless Steel
Mounting Flange &
Round End Inline
(220° Adjustment)**

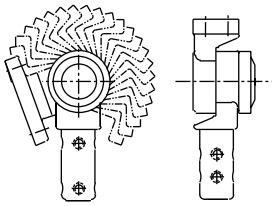

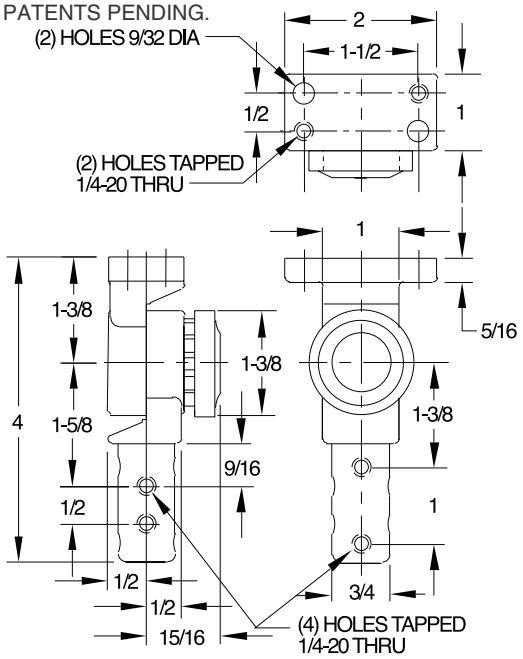

Adjustable Locking Hubs are rotary bearings that provide positive locking at any 10° increment. Once locked, the hub becomes an absolutely rigid joint, able to withstand 80 ft.-lbs. of torque (5:1 safety factor). The round hub extension fits 3/4" ID pipe or tubing. The tapped mounting holes can also be used to attach a plate or angle. The mounting flange provides two mounting options: (1) two 1/4-20 tapped holes allow fastening an object to the mounting flange; (2) two 9/32 dia clearance holes for 1/4" screws allow fastening the mounting flange to a surface. Applications include adjustable fixtures, rotating fixtures, welding fixtures, trunnion mounting, adjustable and/or foldable handles, adjustable part trays and shelves, adjustable and/or flip-up work surfaces, positive positioning of spotlights or nozzles, and collapsable structures.

INLINE (220° ADJUSTMENT)

PART NO.	TOTAL ADJUSTMENT RANGE	ADJUSTMENT INCREMENTS	ALLOWABLE TORQUE (FT-LB)
CL-110-ALH-S	220°	10°	80

**Heavy Duty—
Stainless Steel
Mounting Flange &
Round End Offset
(360° Rotation)**

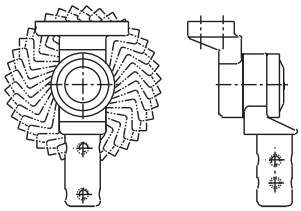

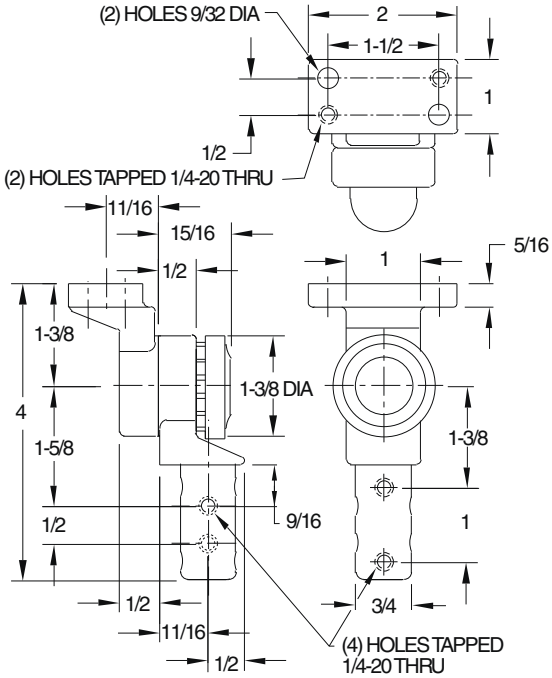

Similar to the locking hub above, except hub extensions are offset to allow full 360° rotation. Offset locking hubs should usually be used in pairs, to avoid off-center loading on a single hub. Make sure that rotating loads are balanced and avoid any possible pinch points, in case hubs are suddenly unlocked and the load is allowed to rotate freely.

OFFSET (360° ROTATION)

PART NO.	TOTAL ADJUSTMENT RANGE	ADJUSTMENT INCREMENTS	ALLOWABLE TORQUE (FT-LB)
CL-111-ALH-S	360°	10°	80

Carr Lane®
MANUFACTURING CO.
4200 Carr Lane Ct., P.O. Box 191970
St. Louis, Missouri 63119-7970 USA
Phone: 314-647-6200, FAX: 314-647-5736
Web Site: www.carrlane.com

(12-07)

ADJUSTABLE LOCKING HUBS

BLACK THERMOPLASTIC (DUPONT ZYTEL™). LIGHT-DUTY MODEL HAS STAINLESS STEEL PINS.
US PATENT NO. 5,586, 363 AND 5,689,999. OTHER PATENTS PENDING.

Medium Duty— Thermoplastic Two Square Ends Inline (220° Adjustment)

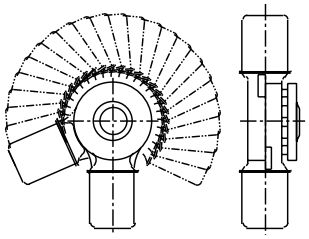

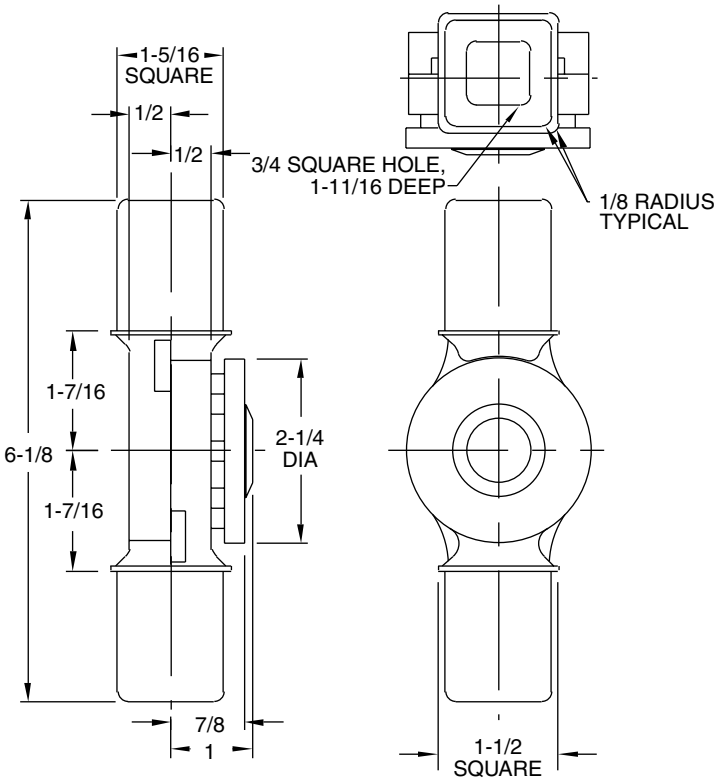

Economical-yet-rugged locking hub made of tough black thermoplastic. These Adjustable Locking Hubs are rotary bearings that provide positive locking at any 10° increment. Once locked, the hub becomes an absolutely rigid joint, able to withstand 33 ft.-lbs. of torque (5:1 safety factor). The square hub extensions fit 1-1/2" O.D. square tubing externally, or 3/4" O.D. square tubing or barstock internally. Hub extensions are sturdy, and can be easily modified to attach to flat surfaces. Applications include adjustable fixtures, rotating fixtures, trunnion mounting, adjustable and/or foldable handles, adjustable part trays and shelves, adjustable and/or flip-up work surfaces, positive positioning of spotlights or nozzles, and collapsable structures.

INLINE (220° ADJUSTMENT)

PART NO.	TOTAL ADJUSTMENT RANGE	ADJUSTMENT INCREMENTS	ALLOWABLE TORQUE (FT-LB)
CL-40-ALH-B	220°	10°	33

Carr Lane MANUFACTURING CO.
4200 Carr Lane Ct., P.O. Box 191970
St. Louis, Missouri 63119-7970 USA
Phone: 314-647-6200, FAX: 314-647-5736
Web Site: www.carrlane.com

CHUCK JAWS

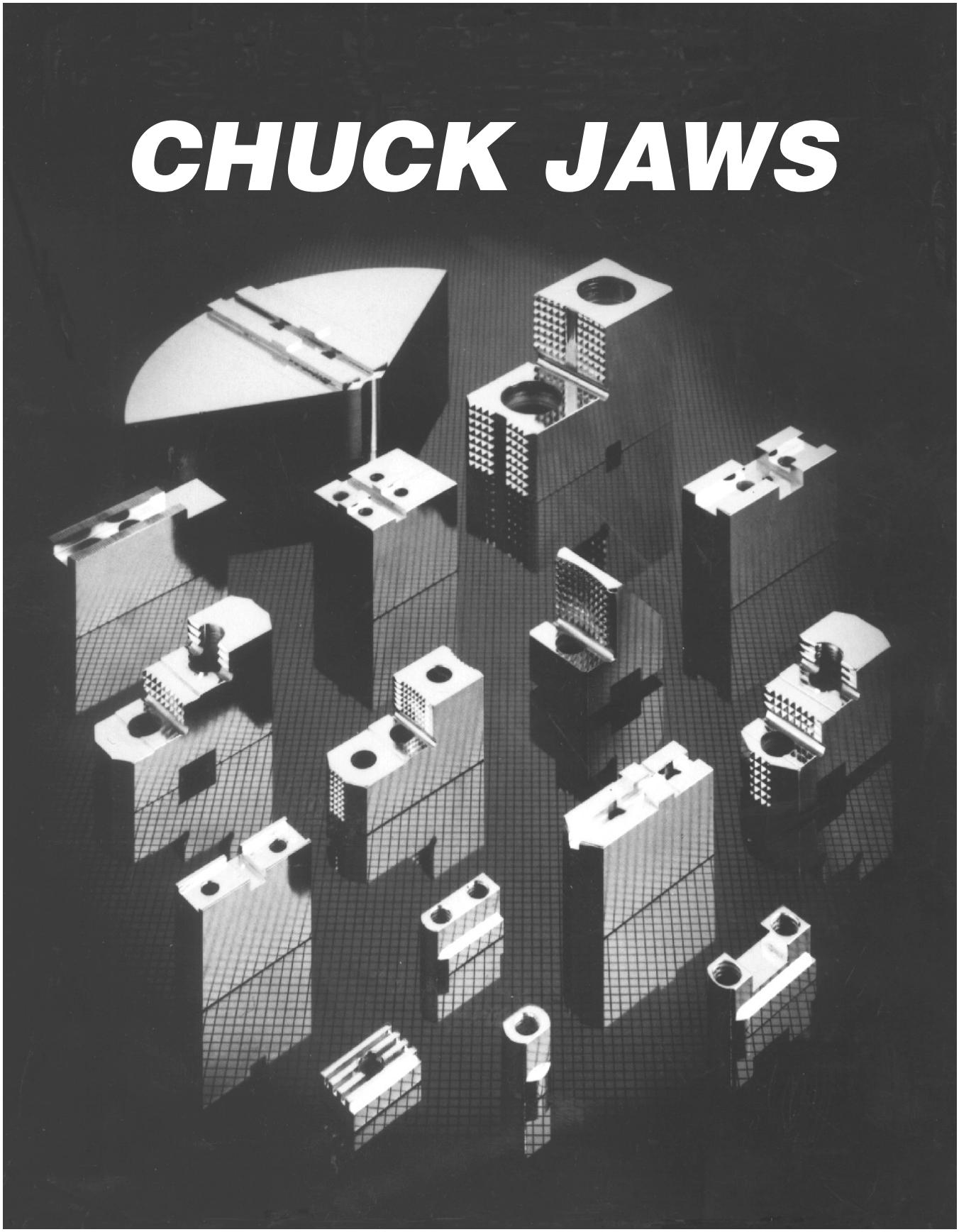

Carr Lane®

MANUFACTURING CO.

4200 Carr Lane Ct., P.O. Box 191970
St. Louis, Missouri 63119-7970 USA
Phone: 314-647-6200, FAX: 314-647-5736
Web Site: www.carrlane.com

INDEX

SERRATED JAWS:

Kitagawa Power Chucks (Metric Serrations) **2-5**
Hardinge Chucks (Metric Serrations) **6**
Hardinge Power Chucks (Inch Serrations) **7**
Howa Power Chucks (Metric Serrations) ..... Please see our web catalog
Howa and Fuji Power Chucks (Metric Coarse Serrations, HO1MA Series) ..... Please see our web catalog
Howa Power Chucks (Inch Serrations, HO12M Series) ..... Please see our web catalog
Matsumoto, Seiki, SMW, Autoblock, ATS, BTC, MMK, Nikko, Strong, and Schunk Power Chucks (Metric Serrations) **12-14**
Powerhold, Autoblok, Erickson, Gamet, Rohm, Bergman, and Schunk Power Chucks (inch Serrations) ..... Please see our web catalog
SMW Power Chucks (Inch Serrations) ..... Please see our web catalog
Pratt Burnerd & Rohm Power Chucks (Inch Serrations) ..... Please see our web catalog

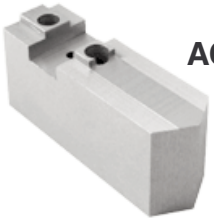

ACME-KEY JAWS:

Autoblok, Cushman, Howa, Logansport, and Pratt Burnerd Acme Key Power Chucks **21-22**
Cushman Acme Key Power Chucks (High-Speed 10-590 Series) ..... Please see our web catalog

SQUARE-KEY JAWS:

Buck, Gisholt, S-P, Warner & Swasey, and Logansport Square-Key Chucks.. Please see our web catalog
Buck Manual Chucks ..... Please see our web catalog

TONGUE & GROOVE JAWS:

Medium-Duty Tongue & Groove Chucks (Atlas, Bergman, Bison, Buck, Cushman, Huron, Pratt Burnerd, Rohm, SCA, S-P, Warner & Swasey, and Yuasa) **28-30**
Heavy-Duty Tongue & Groove Chucks (Atlas, Bergman, Buck, Cushman, Logansport, Nobel, Pratt Burnerd, SCA, S-P, and Warner & Swasey) **31-33**
Metric Tongue & Groove Chucks (SMW KNCS, Forkhardt, Rohm, and Schunk) ..... Please see our web catalog

JAWS FOR HIGH-PRECISION CHUCKS:

Northfield **36-37**
Microcentric **36-37**

MASTER PLATES **38-39**

POT CHUCKS **37**

MANUFACTURING CO.
4200 Carr Lane Ct., P.O. Box 191970
St. Louis, Missouri 63119-7970 USA
Phone: 314-647-6200, FAX: 314-647-5736
Web Site: www.carrlane.com

(4-08)

CHUCK JAW SHAPES

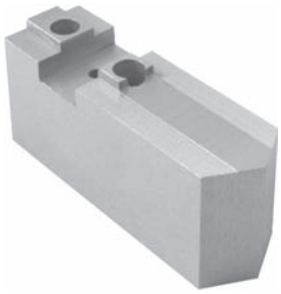

Pointed Soft Jaws

Pointed Soft Jaws are ideal for small-diameter parts, as well as large-diameter parts, because the point allows closing nearer to the center of the chuck. Standard steel material (1018) can be case hardened after machining, or left soft. Optional aluminum material (6061-T6) reduces surface marring, ideal for chucking on finished surfaces.

Square-Nose Soft Jaws

General-purpose blank top jaws, also referred to as "long," or "offset" jaws. Standard steel material (1018) can be case hardened after machining, or left soft. Optional aluminum material (6061-T6) reduces surface marring, ideal for chucking on finished surfaces. Choice of standard height or extra high.

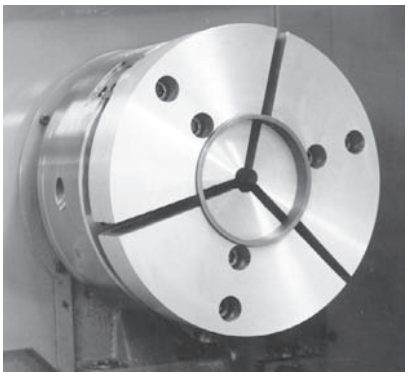

For thinwall parts

Pie-Shaped Soft Jaws

Full-grip jaws for increased surface contact on large-diameter or thinwall parts, to prevent distortion and marring. Also ideal for fixturing non-cylindrical parts. Choice of standard height or extra high. Cast aluminum material (319 alloy) is standard, with steel (mild steel) or cast iron (class 30 gray cast iron) available as an option. Steel jaws can be case hardened after machining, or left soft.

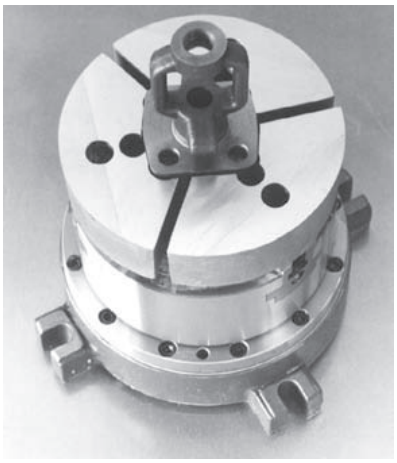

For non-cylindrical parts

Two-Step Reversible Hard Jaws

Most-common hard top jaws with two steps on which to rest parts. Also reversible for through-feeding barstock. Jaws have diamond-point gripping serrations whenever possible. 1018 steel, case hardened.

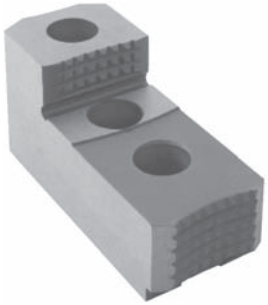

Single-Step Reversible Hard Jaws

Available for some chucks. Similiar to the hard jaws at left, but with only one locating step. 1018 steel, case hardened.

DESIGN CONSIDERATIONS AND SAFETY PRECAUTIONS

The "critical dimensions" shown in the dimension tables must match your master jaw, although outside dimensions can be different. Please check before ordering. Note: in most cases, two-jaw power chucks use the next-larger-diameter top jaws. When using extra-high or oversize-diameter top jaws, maximum allowable spindle RPM will be reduced somewhat. Please consult your chuck's operating manual.

Carr Lane®
MANUFACTURING CO.
4200 Carr Lane Ct., P.O. Box 191970
St. Louis, Missouri 63119-7970 USA
Phone: 314-647-6200, FAX: 314-647-5736
Web Site: www.carrlane.com

(Rev. 3-09)

KITAGAWA POWER CHUCKS (METRIC SERRATIONS)

HJ, HO, HOS, HOH, HOB, B, BT, B200, BT200, AND B215 SERIES

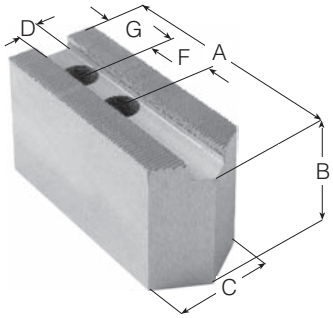

Pointed Soft Jaws

Pointed Soft Jaws are ideal for small-diameter parts, as well as large-diameter parts, because the point allows closing nearer to the center of the chuck. Standard point is a 120° included angle (some sizes have a slight flat at the tip). Standard steel jaws (1018) can be case hardened after machining, or left soft. Optional aluminum material (6061-T6) reduces surface marring, ideal for chucking on finished surfaces. 1.5mm x 60° serrations (3mm x 60° serrations on jaws for 21" and 24" chucks). Note: in most cases, two-jaw power chucks use the next-larger-diameter top jaws.

POINTED SOFT JAWS

PART NO. (SINGLE JAW)		CHUCK SIZE	A LENGTH	B HEIGHT	C WIDTH	CRITICAL DIMENSIONS		
STEEL	ALUMINUM					D	F	SCREW SIZE
CL-KTT4S	CL-KTT4A	4"	2	1	1	.314	.591	M6
CL-KTT4S1	CL-KTT4A1			2				
CL-KW4S	CL-KW4A	4 & 5"	2	1-1/2	1	.394	.551	M8
CL-KW4S1	CL-KW4AI			3				
CL-KTT5S	CL-KTT5A	5"	2-1/2	1-1/2	1	.394	.713	M8
CL-KTT5S1	CL-KTT5A1			3				
CL-KTT6S	CL-KTT6A	6"	3	1-1/2	1-1/4	.474	.787	M10
CL-KTT6S1	CL-KTT6A1			2				
CL-KTT6S2	CL-KTT6A2			3				
CL-KTT8S	CL-KTT8A	8"	4	2	1-1/2	.551	.985	M12
CL-KTT8S1	CL-KTT8A1			3				
CL-KTT8S2	CL-KTT8A2			4				
CL-KTT10S	CL-KTT10A	10"	4-1/2	2	1-1/2	.630	1.181	M12
CL-KTT10S1	CL-KTT10A1			3				
CL-KTT10S4	CL-KTT10A4			4				
—	CL-KTT10A6			6				
CL-KTT10S3	CL-KTT10A3		5-1/2	3	2			
CL-KTT12S	CL-KTT12A	12"	5-1/2	2	2	.710	1.181	M14
CL-KTT12S1	CL-KTT12A1			3				
CL-KTT12S4	CL-KTT12A4			4				
CL-KTT12S1B	—	12"	4	3	2	.710	1.488	M14
—	CL-KTT12A1B		5-1/2	3				
CL-KTTB212S	—	12"	4	2	2	.828	1.181	M16
CL-KTTB212S1	—			3				
—	CL-KTTB212AA		5-1/2	2				
—	CL-KTTB212A1A			3				
CL-KTT15S	CL-KTT15A	15 & 18"	6-1/2	3	2-1/2	.866	1.693	M20
CL-KTT15S1	CL-KTT15A1			4				
—	CL-KTT15A6			6				
CL-KTTB215S	CL-KTTB215A	15 & 18"	6-1/2	3	2-1/2	1.004	1.689	M20
CL-KTTB215S1	CL-KTTB215A1			4				
CL-KTT21S	CL-KTT21A	21 & 24"	8-1/4	3	2-1/2	.984	2.362	M20
CL-KTT21S5	CL-KTT21A5			5				

Carr Lane®
MANUFACTURING CO.
4200 Carr Lane Ct., P.O. Box 191970
St. Louis, Missouri 63119-7970 USA
Phone: 314-647-6200, FAX: 314-647-5736
Web Site: www.carrlane.com

(Rev. 5-08)

KITAGAWA POWER CHUCKS (METRIC SERRATIONS)

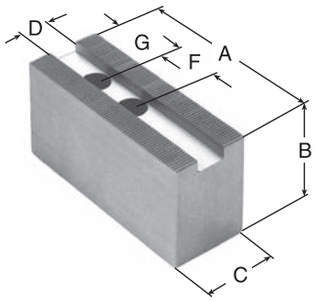

Square-Nose Soft Jaws

General-purpose blank top jaws. Steel jaws (1018) can be case hardened after machining, or left soft. Optional aluminum material (6061-T6) reduces surface marring, ideal for chucking on finished surfaces. 1.5mm x 60° serrations (3mm x 60° serrations on jaws for 21" and 24" chucks). Note: in most cases, two-jaw power chucks use the next-larger-diameter top jaws.

SQUARE-NOSE SOFT JAWS

PART NO. (SINGLE JAW)		CHUCK SIZE	A LENGTH	B HEIGHT	C WIDTH	CRITICAL DIMENSIONS			G
STEEL	ALUMINUM					D	F	SCREW SIZE	
—	—	4"	SEE POINTED SOFT JAWS						
—	—	4 & 5"							
—	—	5"							
CL-KTT6S-SQ	CL-KTT6A-SQ	6"	3	1-1/2	1-1/4	.474	.787	M10	—
CL-KTT6S2-SQ	CL-KTT6AS2-SQ			3					
CL-KTT8S-SQ	CL-KTT8A-SQ	8"	4	2	1-1/2	.551	.985	M12	—
CL-KTT8S2-SQ	CL-KTT8A2-SQ			4					
CL-KTT10S-SQ	CL-KTT10A-SQ	10"	4-1/2	2	1-1/2	.630	1.181	M12	—
CL-KTT10S4-SQ	CL-KTT10A2-SQ			4					
CL-KTT12S-SQ	CL-KTT12A-SQ	12"	5-1/2	2	2	.710	1.181	M14	—
CL-KTT12S4-SQ	—			4					
CL-KTT12S1B-SQ	CL-KTT12A1B-SQ	12"	5-1/2	3	2	.710	1.488	M14	—
CL-KTTB212S-SQ	CL-KTTB212AA-SQ	12"	5-1/2	2	2	.828	1.181	M16	—
CL-KTTB212S1-SQ	CL-KTTB212A1A-SQ			3					
CL-KTT15S-SQ	CL-KTT15A-SQ	15 & 18"	6-1/2	3	2-1/2	.866	1.693	M20	—
CL-KTT15S1-SQ	CL-KTT15A1-SQ			4					
—	—	15 & 18"	SEE POINTED SOFT JAWS						
—	—								
—	—	21 & 24"							
—	—								

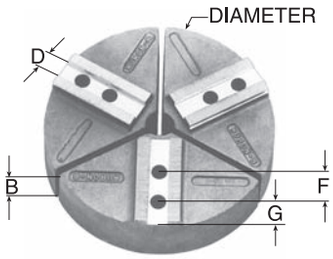

Pie-Shaped Soft Jaws

Full-grip jaws for increased surface contact on large diameter or thinwall parts, to prevent distortion and marring. Also ideal for fixturing non-cylindrical parts. Cast aluminum material is standard, with steel or cast iron available as an option. Steel jaws can be case hardened after machining, or left soft. 1.5mm x 60° serrations (3mm x 60° serrations on jaws for 21" and 24" chucks).

PIE-SHAPED SOFT JAWS

PART NO. (SINGLE JAW)			CHUCK SIZE	DIAMETER	B HEIGHT	CRITICAL DIMENSIONS			
ALUMINUM	CAST IRON	STEEL				D	F	G	SCREW SIZE
CL-KTT4P	—	—	4"	6	2	.314	.591	1.69	M6
CL-KTT4P1	—	—			4				
CL-KW4P	—	—	4 & 5"	6	2	.394	.551	1.61	M8
CL-KW4P1	—	—			4				
CL-KTT5P	—	—	5"	6	2	.394	.713	.92	M8
CL-KTT5P1	—	—			4				
CL-KTT6P	CL-CI-KTT6P	CL-ST-KTT6P	6"	6	2	.474	.787	.87	M10
CL-KTT6P1	CL-CI-KTT6P1	CL-ST-KTT6P1			4				
CL-KTT8-6P	—	—		8	2			1.87	
CL-KTT8-6P1	—	—			4				
CL-KTT10-6P	—	—		10	2			2.87	
CL-KTT8P	CL-CI-KTT8P	CL-ST-KTT8P	8"	8	2	.553	.985	1.45	M12
CL-KTT8P1	CL-CI-KTT8P1	CL-ST-KTT8P1			4				
CL-KTT8P6	—	—			6				
CL-KTT10-8P	—	—		10	2			2.45	
CL-KTT10-8P1	—	—			4				
CL-KTT12-8P	—	—		12	2			3.45	

Carr Lane®
MANUFACTURING CO.
4200 Carr Lane Ct., P.O. Box 191970
St. Louis, Missouri 63119-7970 USA
Phone: 314-647-6200, FAX: 314-647-5736
Web Site: www.carrlane.com

(Rev. 4-07)

KITAGAWA POWER CHUCKS (METRIC SERRATIONS)

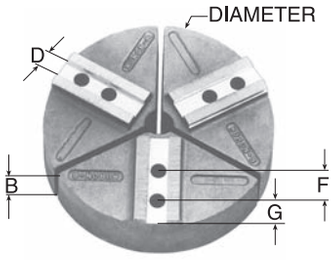

PIE-SHAPED SOFT JAWS (CONT)

PART NO. (SINGLE JAW)			CHUCK SIZE	DIAMETER	B HEIGHT	CRITICAL DIMENSIONS			SCREW SIZE
ALUMINUM	CAST IRON	STEEL				D	F	G	
CL-KTT10P	CL-CI-KTT10P	CL-ST-KTT10P	10"	10	2	.630	1.181	1.87	M12
CL-KTT10P1	CL-CI-KTT10P1	CL-ST-KTT10P1			4				
CL-KTT10P6	—	—			6				
CL-KTT12-10P	—	—		12	2			2.87	
CL-KTT12-10P1	—	—			4				
CL-KTT15-10P	—	—		15	3			4.37	
CL-KTT15-10P1	—	—			4				
CL-KTT18-10P	—	—		18	3			5.87	
CL-KTT18-10P1	—	—			4				
CL-KTT21-10P1	—	—		21	4			7.37	
CL-KTT12P	CL-CI-KTT12P	CL-ST-KTT12P	12"	12	2	.710	1.181	2.98	M14
CL-KTT12P1	CL-CI-KTT12P1	CL-ST-KTT12P1			4				
CL-KTT15-12P	—	—		15	3			4.48	
CL-KTT15-12P1	—	—			4				
CL-KTT18-12P	—	—		18	3			5.98	
CL-KTT18-12P1	—	—			4				
CL-KTT21-12P2	—	—		21	2			7.48	
CL-KTT21-12P	—	—			3				
CL-KTT21-12P1	—	—			4				
CL-KTT12PB	—	—	12"	12	2	.710	1.488	2.92	M14
CL-KTT12P1B	—	—			4				
CL-KTTB212P	—	—	12"	12	2	.828	1.181	1.30	M16
CL-KTTB212P1	—	—			4				
CL-KTT15-B212P	—	—		15	3			2.80	
CL-KTT24-B212P2	—	—		18	2			4.30	
CL-KTT15P2	—	—	15"	15	2	.866	1.693	2.32	M20
CL-KTT15P	CL-CI-KTT15P	—			3				
CL-KTT15P1	CL-CI-KTT15P1	—			4				
CL-KTT15P6	—	—			6				
CL-KTT15P8	—	—			8				
CL-KTT18-15P	—	—		18	3			3.82	
CL-KTT18-15P1	—	—			4				
CL-KTT21-15P2	—	—		21	2			5.32	
CL-KTT21-15P	—	—			3				
CL-KTT21-15P1	—	—			4				
CL-KTT24-15P2	—	—		24	2			6.82	
CL-KTT24-15P	—	—			3				
CL-KTT24-15P1	—	—			4				
CL-KTT15P-2.36	—	—	15 & 18"	15	3	.866	2.362	3.45	M20
CL-KTT15P1-2.36	—	—			4				
CL-KTTB215P2	—	—	15 & 18"	15	2	1.004	1.693	2.18	M20
CL-KTTB215P	—	—			3				
CL-KTTB215P1	—	—			4				
CL-KTT18-B215P1	—	—		18	4			3.68	
CL-KTT21-B215P2	—	—		21	2			5.18	
CL-KTT21-B215P	—	—			3				
CL-KTT18P	—	—	18"	18	3	.866	1.693	3.18	M20
CL-KTT18P1	—	—			4				
CL-KTT21-18P2	—	—		21	2			4.68	
CL-KTT24-18P2	—	—		24	2			6.18	
CL-KTT21P2	—	—	21"	21	2	.985	2.362	4.76	M20
CL-KTT21P	—	—			3				
CL-KTT21P1	—	—			4				
CL-KTT24-21P2	—	—		24	2			6.26	
CL-KTT24-21P	—	—			3				
CL-KTT24-21P1	—	—			4				
CL-KTT28-21P	—	—		28	3			8.26	
CL-KTT28-21P1	—	—			4				
CL-KTT24P2	—	—	24"	24	2	.985	2.362	8.65	M20
CL-KTT24P	—	—			3				
CL-KTT24P1	—	—			4				
CL-KTT28-24P1	—	—		28	4			10.65	

Carr Lane®
MANUFACTURING CO.
4200 Carr Lane Ct., P.O. Box 191970
St. Louis, Missouri 63119-7970 USA
Phone: 314-647-6200, FAX: 314-647-5736
Web Site: www.carrlane.com

(Rev. 6-08)

KITAGAWA POWER CHUCKS (METRIC SERRATIONS)

HJ, HO, HOS, HOH, HOB, B, BT, B200, BT200, AND B215 SERIES

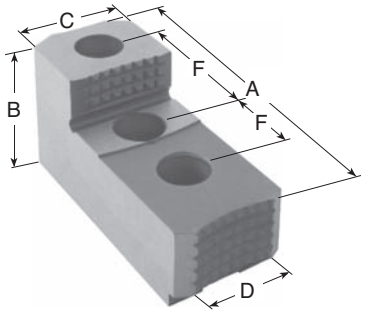

Single-Step Reversible Hard Jaws

Hard top jaws with one locating step on which to rest parts. Also reversible for through feeding barstock. Jaws have a diamond-point gripping surface whenever possible. 1.5mm x 60° serrations. 1018 steel, case hardened .020-.030" deep. Hard jaws are sold in matched sets of three.

SINGLE-STEP REVERSIBLE HARD JAWS

PART NO. (MATCHED SET OF 3 JAWS)	CHUCK SIZE	A LENGTH	B HEIGHT	C WIDTH	HEIGHT TO STEP	CRITICAL DIMENSIONS D	F	SCREW SIZE
—	4"	—	—	—	—	.314	.591	M6
—	4 & 5"	—	—	—	—	.394	.551	M8
—	5"	—	—	—	—	.394	.713	M8
CL-KTT6-HJSS-SETOF3	6"	2.85	1.50	1.13	1.02	.474	.787	M10
CL-KTT8-HJSS-SETOF3	8"	3.16	1.98	1.50	1.23	.551	.985	M12
CL-KTT10-HJSS-SETOF3	10"	3.99	1.98	1.50	1.22	.630	1.181	M12
CL-KTT12-HJSS-SETOF3	12"	4.16	1.98	2.00	1.15	.710	1.181	M14
—	12"	—	—	—	—	.710	1.488	M14
—	12"	—	—	—	—	.824	1.181	M16
CL-KTT15-HJSS-SETOF3	15 & 18"	5.88	2.48	2.50	1.55	.866	1.693	M20
—	15 & 18"	—	—	—	—	.866	2.362	M20
—	15 & 18"	—	—	—	—	1.004	1.689	M20
—	21 & 24"	—	—	—	—	.984	2.362	M20
—	21 & 24"	—	—	—	—	.984	3.150	M20

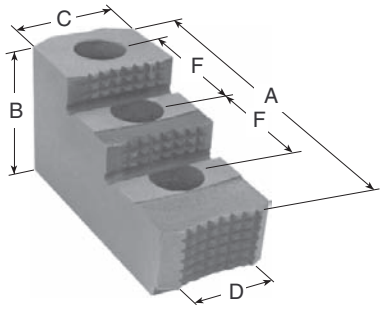

Two-Step Reversible Hard Jaws

Hard top jaws with two locating steps on which to rest parts. Also reversible for through feeding barstock. Jaws have a diamond-point gripping surface whenever possible. 1.5mm x 60° serrations. 1018 steel, case hardened .020-.030" deep. Hard jaws are sold in matched sets of three.

TWO-STEP REVERSIBLE HARD JAWS

PART NO. (MATCHED SET OF 3 JAWS)	CHUCK SIZE	A LENGTH	B HEIGHT	C WIDTH	HEIGHT TO 1ST STEP	HEIGHT TO 2ND STEP	CRITICAL DIMENSIONS D	F	SCREW SIZE
—	4"	—	—	—	—	—	.314	.591	M6
—	4 & 5"	—	—	—	—	—	.394	.551	M8
—	5"	—	—	—	—	—	.394	.713	M8
CL-KTT6-HJDS-SETOF3	6"	2.85	1.73	1.13	.87	1.31	.474	.787	M10
CL-KTT8-HJDS-SETOF3	8"	3.17	2.23	1.50	.98	1.60	.551	.985	M12
CL-KTT10-HJDS-SETOF3	10"	3.99	2.73	1.50	1.23	1.98	.630	1.181	M12
CL-KTT12-HJDS-SETOF3	12"	4.16	2.48	2.00	1.12	1.80	.710	1.181	M14
—	12"	—	—	—	—	—	.710	1.488	M14
CL-KTTB212-HJDS-SETOF3	12"	4.13	2.75	2.00	—	2	.824	1.181	M16
CL-KTT15-HJDS-SETOF3	15 & 18"	5.88	2.98	2.50	1.44	2.23	.866	1.693	M20
—	15 & 18"	—	—	—	—	—	.866	2.362	M20
CL-KTTB215-HJDS-SETOF3	15 & 18"	5.88	2.98	2.50	1.44	2.23	1.004	1.689	M20
—	21 & 24"	—	—	—	—	—	.984	2.362	M20
—	21 & 24"	—	—	—	—	—	.984	3.150	M20

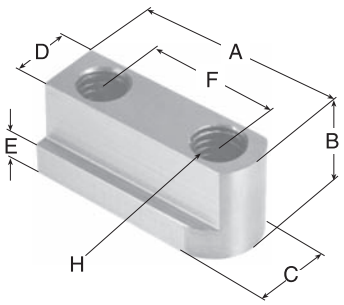

Jaw Nuts

For positioning and fastening top jaws on a chuck's master jaws. Alloy steel.

JAW NUTS

PART NO. (SINGLE NUT)	CHUCK SIZE	A	B	C	CRITICAL DIMENSIONS D	E	F	H THREAD
CL-HOB4-JN	4"	.96	.531	.453	.314	.177	.591	M6
CL-KT4-JN	4 & 5"	1.03	.750	.670	.394	.270	.551	M8
CL-HOB5-JN	5"	1.18	.612	.550	.394	.220	.713	M8
CL-KTT6-JN	6"	1.44	.870	.690	.474	.295	.787	M10
CL-KTTB208-JN	8"	1.88	.810	.810	.551	.335	.985	M12
CL-KTT10-JN	10"	2.00	1.000	.870	.630	.335	1.181	M12
CL-KTT12-JN	12"	2.25	1.300	1.040	.710	.530	1.181	M14
—	12"	—	—	—	.710	—	1.488	M14
CL-KTTB212-JN	12"	2.25	.860	1.160	.828	.217	1.181	M16
CL-KTT15-JN	15 & 18"	3.25	1.790	1.320	.866	.650	1.693	M20
CL-HJ15-JN	15 & 18"	3.82	1.790	1.320	.866	.649	2.362	M20
—	15 & 18"	—	—	—	1.004	—	1.689	M20
—	21 & 24"	—	—	—	.984	—	2.362	M20
—	21 & 24"	—	—	—	.984	—	3.150	M20

Carr Lane®
MANUFACTURING CO.
4200 Carr Lane Ct., P.O. Box 191970
St. Louis, Missouri 63119-7970 USA
Phone: 314-647-6200, FAX: 314-647-5736
Web Site: www.carrlane.com

(Rev. 4-07)

HARDINGE CHUCKS (METRIC SERRATIONS)

1.5mm x 60° serrations

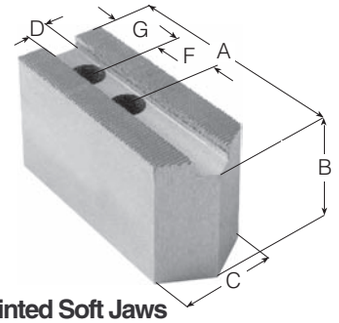

Pointed Soft Jaws

POINTED SOFT JAWS

PART NO. (SINGLE JAW)		CHUCK	A	B	C	CRITICAL DIMENSIONS		
STEEL	ALUMINUM	SIZE	LENGTH	HEIGHT	WIDTH	D	F	SCREW SIZE
CL-HAR5MSHS	CL-HAR5MSHA	5"	2.77	1-1/4	1	.394	.709	M8
CL-HAR6MSHS	CL-HAR6MSHA	6"	3.09	1-1/2	1-1/4	.474	.787	M10
CL-HAR8MSHS	CL-HAR8MSHA	8"	3.76	2	1-1/2	.551	.985	M12
CL-HAR10MSHS	CL-HAR10MSHA	10"	4.56	2	1-1/2	.630	1.181	M12

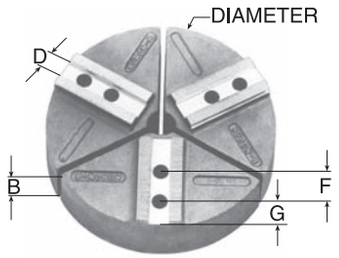

Pie-Shaped Soft Jaws

PIE-SHAPED SOFT JAWS

PART NO. (SINGLE JAW)			CHUCK	DIA-	B	CRITICAL DIMENSIONS			
ALUMINUM	CAST IRON	STEEL	SIZE	METER	HEIGHT	D	F	G	SCREW SIZE
CL-HAR5MSHP	—	—	5"	6	2	.394	.709	.60	M8
CL-HAR5MSHP1	—	—			4				
CL-HAR6MSHP	—	—	6"	6.5	2	.474	.787	.53	M10
CL-HAR6MSHP1	—	—			4				
CL-HAR8MSHP	—	—	8"	8	2	.551	.985	.75	M12
CL-HAR8MSHP1	—	—			4				
CL-HAR10MSHP	—	—	10"	10	2	.630	1.81	1.07	M14
CL-HAR10MSHP1	—	—			4				

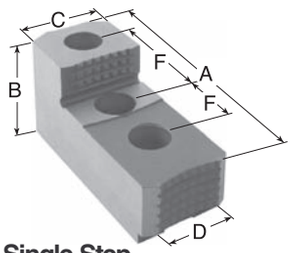

Single-Step Reversible Hard Jaws

SINGLE-STEP REVERSIBLE HARD JAWS (SET OF 3)

PART NO. (MATCHED SET OF 3 JAWS)	CHUCK SIZE	A LENGTH	B HEIGHT	C WIDTH	HEIGHT TO STEP	CRITICAL DIMENSIONS D	F	SCREW SIZE
—	5"	—	—	—	—	.394	.709	M8
CL-KTT6-HJSS-SETOF3	6"	3.00	1.50	1.25	1.00	.474	.787	M10
CL-KTT8-HJSS-SETOF3	8"	3.25	2.00	1.50	1.25	.551	.985	M12
CL-KTT10-HJSS-SETOF3	10"	4.00	2.00	1.50	1.25	.630	1.181	M12

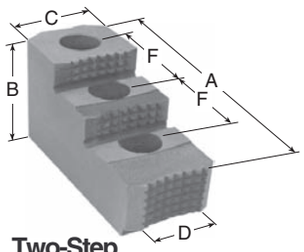

Two-Step Reversible Hard Jaws

TWO-STEP REVERSIBLE HARD JAWS (SET OF 3)

PART NO. (MATCHED SET OF 3 JAWS)	CHUCK SIZE	A LENGTH	B HEIGHT	C WIDTH	HEIGHT TO 1ST STEP	HEIGHT TO 2ND STEP	CRITICAL DIMENSIONS D	F	SCREW SIZE
—	5"	—	—	—	—	—	.394	.709	M8
CL-KTT6-HJDS-SETOF3	6"	2.83	1.73	1.13	.87	1.31	.474	.787	M10
CL-KTT8-HJDS-SETOF3	8"	3.17	2.23	1.50	.98	1.60	.551	.985	M12
CL-KTT10-HJDS-SETOF3	10"	3.99	2.73	1.50	1.23	1.98	.630	1.181	M12

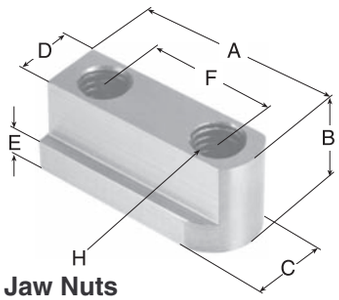

Jaw Nuts

JAW NUTS

PART NO. (SINGLE NUT)	CHUCK SIZE	A	B	C	CRITICAL DIMENSIONS D	E	F	H THREAD
—	5"	—	—	—	0.394	0.22	0.709	M8
CL-KTT6-JN	6"	1.44	0.87	0.69	0.474	0.295	0.787	M10
CL-KTTB208-JN	8"	1.88	0.81	0.81	0.551	0.335	0.985	M12
CL-KTT10-JN	10"	2.00	1	0.87	0.63	0.335	1.181	M12

Carr Lane®
MANUFACTURING CO.
4200 Carr Lane Ct., P.O. Box 191970
St. Louis, Missouri 63119-7970 USA
Phone: 314-647-6200, FAX: 314-647-5736
Web Site: www.carrlane.com

(Rev. 4-07)

HARDINGE POWER CHUCKS (INCH SERRATIONS)

1/16" x 90º serrations

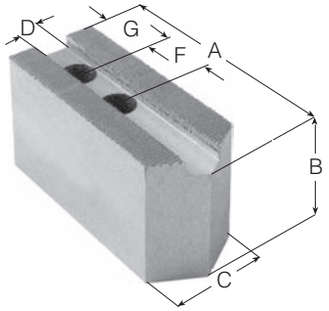

Pointed Soft Jaws

POINTED SOFT JAWS

PART NO. (SINGLE JAW)		CHUCK	A	B	C	CRITICAL DIMENSIONS		
STEEL	ALUMINUM	SIZE	LENGTH	HEIGHT	WIDTH	D	F	SCREW SIZE
CL-HAR4ESHS	CL-HAR4ESHA	4"	2.50	1-1/4	1	.434	.709	M8
CL-HAR5ESHS	CL-HAR5ESHA	5"	2.77	1-1/4	1	.434	.709	5/16-18
CL-HAR6ESHS	CL-HAR6ESHA	6"	3.09	1-1/2	1-1/4	.551	.787	3/8-16
—	CL-HAR6ESHA1			2				
—	CL-HAR6ESHA2			3				
CL-HAR8ESHS	CL-HAR8ESHA	8"	3.68	2	1-1/2	.669	.880	7/16-14
CL-HAR10ESHS	CL-HAR10ESHA	10"	4.72	2	1-1/2	.828	1.187	5/8-11

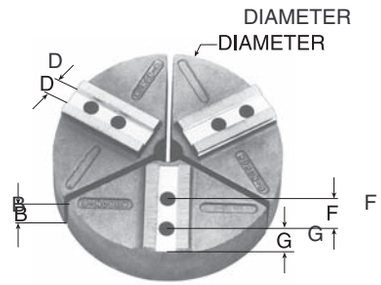

Pie-Shaped Soft Jaws

PIE-SHAPED SOFT JAWS

PART NO. (SINGLE JAW)			CHUCK	DIA-	B	CRITICAL DIMENSIONS			
ALUMINUM	CAST IRON	STEEL	SIZE	METER	HEIGHT	D	F	G	SCREW SIZE
—	—	—	4"			.434	.709		M8
CL-HAR5ESHP	—	—	5"	6	2	.434	.709	.59	5/16-18
CL-HAR5ESHP1	—	—			4				
CL-HAR6ESHP	—	—	6"	6.5	2	.551	.787	.49	3/8-16
CL-HAR6ESHP1	—	—			4				
CL-HAR8ESHP	—	—	8"	8	2	.669	.880	.82	7/16-14
CL-HAR8ESHP1	—	—			4				
CL-HAR10ESHP	—	—	10"	10	2	.828	1.187	1.06	5/8-11
CL-HAR10ESHP1	—	—			4				

Carr Lane®
MANUFACTURING CO.
4200 Carr Lane Ct., P.O. Box 191970
St. Louis, Missouri 63119-7970 USA
Phone: 314-647-6200, FAX: 314-647-5736
Web Site: www.carrlane.com

(Rev. 6-08)

HOWA POWER CHUCKS (METRIC SERRATIONS)

1.5mm x 60° serrations
(3mm x 60° serrations on jaws for 15" chucks)

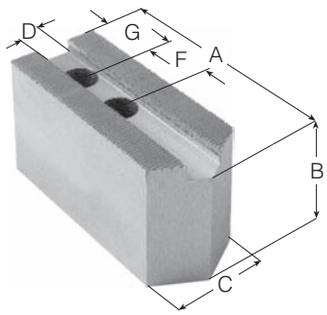

Pointed Soft Jaws

POINTED SOFT JAWS

PART NO. (SINGLE JAW)		CHUCK SIZE	A LENGTH	B HEIGHT	C WIDTH	CRITICAL DIMENSIONS		
STEEL	ALUMINUM					D	F	SCREW SIZE
CL-HOW5S	CL-HOW5A	5"	2-1/2	1-1/2	1	.394	.748	M8
CL-HOW5S1	CL-HOW5A1			3				
CL-HOW6S	CL-HOW6A	6"	3	1-1/2	1-1/4	.433	.787	M10
CL-HOW6S1	CL-HOW6A1			3				
CL-KTT6S	CL-KTT6A	6"	3	1-1/2	1-1/4	.474	.787	M10
CL-KTT6S1	CL-KTT6A1			2				
CL-KTT6S2	CL-KTT6A2			3				
CL-KTT8S	CL-KTT8A	8"	4	2	1-1/2	.551	.985	M12
CL-KTT8S1	CL-KTT8A1			3				
CL-KTT8S2	CL-KTT8A2			4				
CL-HOW27M88S	CL-HOW27M88A	8"	4	2	1-1/2	.630	.985	M12
CL-HOW27M88S1	CL-HOW27M88A1			3				
CL-HOW27M88S	CL-HOW27M88A	10"	4	2	1-1/2	.630	.985	M12
CL-HOW27M88S1	CL-HOW27M88A1			3				
CL-HOW27M10S	CL-HOW27M10A	10"	4-1/2	2	1-1/2	.710	1.181	M14
CL-HOW27M10S1	CL-HOW27M10A1			3				
CL-KTT12S	CL-KTT12A	12"	5-1/2	2	2	.710	1.181	M14
CL-KTT12S1	CL-KTT12A1			3				
CL-KTT12S4	CL-KTT12A4			4				
CL-HOW27M12S	CL-HOW27M12A	12"	5-1/2	2	2	.827	1.377	M16
CL-HOW27M12S1	CL-A-HOW27M12-EH-P			3				
CL-HOW7MA15S	CL-HOW7MA15A	15"	5	2-1/2	2	.827	1.575	M16
—	—	15"	—	—	—	1.025	1.654	M20

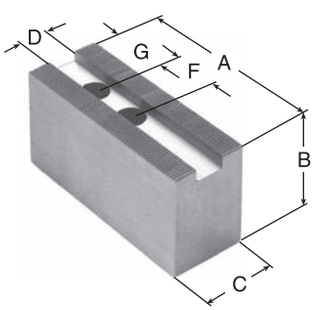

Square-Nose Soft Jaws

SQUARE-NOSE SOFT JAWS

PART NO. (SINGLE JAW)		CHUCK SIZE	A LENGTH	B HEIGHT	C WIDTH	CRITICAL DIMENSIONS		
STEEL	ALUMINUM					D	F	SCREW SIZE
CL-HOW5S-SQ	CL-HOW5A-SQ	5"	2-1/2	1-1/2	1	.394	.748	M8
CL-HOW5S1-SQ	CL-HOW5A1-SQ			2				
CL-HOW6S-SQ	CL-HOW6A-SQ	6"	3	1-1/2	1-1/4	.433	.787	M10
CL-HOW6S1-SQ	CL-HOW6A1-SQ			2				
CL-KTT6S-SQ	CL-KTT6A-SQ	6"	3	1-1/2	1-1/4	.474	.787	M10
CL-KTT6S1-SQ	CL-KTT6A1-SQ			2				
CL-KTT6S2-SQ	CL-KTT6A2-SQ			3				
CL-KTT8S-SQ	CL-KTT8A-SQ	8"	4	2	1-1/2	.551	.985	M12
CL-KTT8S1-SQ	CL-KTT8A1-SQ			3				
CL-KTT8S2-SQ	CL-KTT8A2-SQ			4				
CL-HOW27M88S-SQ	CL-HOW27M88A-SQ	8"	4	2	1-1/2	.630	.985	M12
CL-HOW27M88S1-SQ	CL-HOW27M88A1-SQ			3				
CL-HOW27M88S-SQ	CL-HOW27M88A-SQ	10"	4	2	1-1/2	.630	.985	M12
CL-HOW27M88S1-SQ	CL-HOW27M88A1-SQ			3				
CL-HOW27M10S-SQ	CL-HOW27M10A-SQ	10"	4-1/2	2	1-1/2	.710	1.181	M14
CL-HOW27M10S1-SQ	CL-HOW27M10A1-SQ			3				
CL-KTT12SA-SQ	—	12"	4	2	2	.710	1.181	M14
CL-KTT12S1A-SQ	—			3				
CL-KTT12S3A-SQ	—		5-1/8	2				
CL-KTT12S4A-SQ	CL-KTT12AA-SQ			3				
CL-KTT12S5A-SQ	CL-KTT12A1A-SQ			4				
—	—	12"	SEE POINTED SOFT JAWS					
CL-HOW7MA15S-SQ	CL-HOW7MA15A-SQ	15"	5	2-1/2	2	.827	1.575	M16
—	—	15"	—	—	—	1.025	1.654	M20

Carr Lane®
MANUFACTURING CO.
4200 Carr Lane Ct., P.O. Box 191970
St. Louis, Missouri 63119-7970 USA
Phone: 314-647-6200, FAX: 314-647-5736
Web Site: www.carrlane.com

(Rev. 4-08)

HOWA POWER CHUCKS (METRIC SERRATIONS)

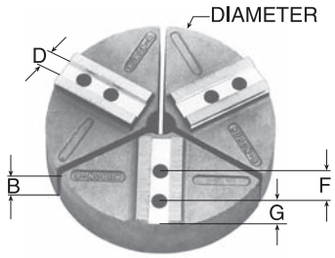

Pie-Shaped Soft Jaws

PIE-SHAPED SOFT JAWS

PART NO. (SINGLE JAW) ALUMINUM	CAST IRON	STEEL	CHUCK SIZE	DIAMETER	B HEIGHT	CRITICAL DIMENSIONS D	F	G	SCREW SIZE
CL-HOW5P	—	—	5"	6	2	.394	.748	1.25	M8
CL-HOW5P1	—	—			4				
CL-KTT6P	CL-CI-KTT6P	CL-ST-KTT6P	6"	6	2	.474	.787	.56	M10
CL-KTT6P1	CL-CI-KTT6P1	CL-ST-KTT6P1			4				
CL-KTT8-6P	—	—		8	2			1.56	
CL-KTT8-6P1	—	—			4				
CL-KTT10-6P	—	—		10	2			2.56	
CL-KTT8P	CL-CI-KTT8P	CL-ST-KTT8P	8"	8	2	.551	.985	1.02	M12
CL-KTT8P1	CL-CI-KTT8P1	CL-ST-KTT8P1			4				
CL-KTT8P6	—	—			6				
CL-KTT10-8P	—	—		10	2			2.02	
CL-KTT10-8P1	—	—			4				
CL-KTT12-8P	—	—		12	2			3.02	
CL-HOW27M88P	CL-CI-HOW27M88P	CL-ST-HOW27M88P	8"	8	2	.630	.985	1.02	M12
CL-HOW27M88P1	CL-CI-HOW27M88P1	CL-ST-HOW27M88P1			4				
CL-HOW27M88P	CL-CI-HOW27M88P	CL-ST-HOW27M88P	10"	8	2	.630	.985	1.02	M12
CL-HOW27M88P1	CL-CI-HOW27M88P1	CL-ST-HOW27M88P1			4				
CL-HOW27M10P	—	—	10"	10	2	.710	1.181	.82	M14
CL-HOW27M10P1	—	—			4				
CL-KTT12P	CL-CI-KTT12P	CL-ST-KTT12P	12"	12	2	.710	1.181	2.51	M14
CL-KTT12P1	CL-CI-KTT12P1	CL-ST-KTT12P1			4				
CL-KTT15-12P	—	—		15	3			4.01	
CL-KTT15-12P1	—	—			4				
CL-KTT18-12P	—	—		18	3			5.51	
CL-KTT18-12P1	—	—			4				
CL-KTT21-12P2	—	—		21	2			7.01	
CL-KTT21-12P	—	—			3				
CL-KTT21-12P1	—	—			4				
CL-HOW27M12P	—	—	12"	12	2	.827	1.377	1.87	M16
CL-HOW27M12P1	—	—			4				
CL-HOW7MA15P	—	—	15"	15	3	.827	1.575	1.80	M16
CL-HOW7MA15P1	—	—			4				
CL-HOW27M15P	—	—	15"	15	3	1.025	1.654	1.53	M20
CL-HOW27M15P1	—	—			4				

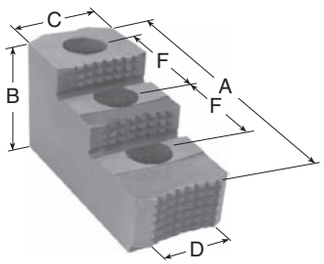

Two-Step Reversible Hard Jaws

TWO-STEP REVERSIBLE HARD JAWS (SET OF 3)

PART NO. (MATCHED SET OF 3 JAWS)	CHUCK SIZE	A LENGTH	B HEIGHT	C WIDTH	HEIGHT TO 1ST STEP	HEIGHT TO 2ND STEP	CRITICAL DIMENSIONS D	F	SCREW SIZE
CL-KTT6-HJDS-SETOF3	6"	2.83	1.73	1.13	.87	1.31	.474	.787	M10
CL-KTT8-HJDS-SETOF3	8"	3.17	2.23	1.50	.98	1.60	.551	.985	M12
—	8"	—	—	—	—	—	.630	.985	M12
—	10"	—	—	—	—	—	.630	.985	M12
CL-KTT12-HJDS-SETOF3	10"	4.16	2.48	2.00	1.12	1.80	.710	1.181	M14
CL-KTT12-HJDS-SETOF3	12"	4.16	2.48	2.00	1.12	1.80	.710	1.181	M14
—	12"	—	—	—	—	—	.827	1.377	M16
—	15"	—	—	—	—	—	.827	1.575	M16
—	15"	—	—	—	—	—	1.025	1.654	M18

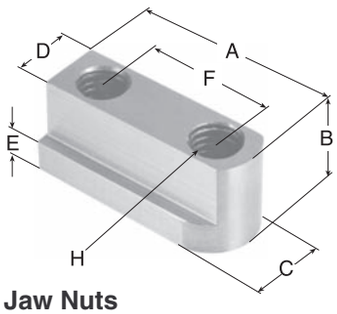

Jaw Nuts

JAW NUTS

PART NO. (SINGLE NUT)	CHUCK SIZE	A	B	C	CRITICAL DIMENSIONS D	E	F	H THREAD
CL-KTT6-JN	6"	1.44	.87	.69	.474	.295	.787	M10
CL-KTTB208-JN	8"	1.88	.81	.81	.551	.335	.985	M12
CL-HOW27M88-JN	8"	2.00	1.00	.91	.630	.374	.985	M12
CL-HOW27M88-JN	10"	2.00	1.00	.91	.630	.374	.985	M12
CL-KTT12-JN	10"	2.25	1.30	1.04	.710	.530	1.181	M14
CL-KTT12-JN	12"	2.25	1.30	1.04	.710	.530	1.181	M14
CL-HO27M12-JN	12"	2.43	1.14	1.06	.827	.413	1.377	M16
CL-HO7MA15-JN	15"	2.56	1.14	1.00	.827	.374	1.575	M16
CL-HO27M15-JN	15"	2.75	1.57	1.34	1.025	.669	1.654	M20

Carr Lane®
MANUFACTURING CO.
4200 Carr Lane Ct., P.O. Box 191970
St. Louis, Missouri 63119-7970 USA
Phone: 314-647-6200, FAX: 314-647-5736
Web Site: www.carrlane.com

(Rev. 5-08)

HOWA AND FUJI POWER CHUCKS (METRIC COARSE SERRATIONS)

HO1MA SERIES

3mm x 60° serrations

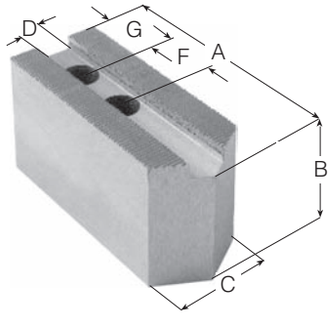

Pointed Soft Jaws

POINTED SOFT JAWS

PART NO. (SINGLE JAW)		CHUCK	A	B	C	CRITICAL DIMENSIONS			
STEEL	ALUMINUM	SIZE	LENGTH	HEIGHT	WIDTH	D	F	SCREW SIZE	G
—	—	6"	—	—	—	.472	.787	M10	.591
CL-HOW8S	CL-HOW8A	8"	4	2	1-1/2	.551	.985	M12	—
CL-HOW8S1	CL-HOW8A1			3					
—	—	10"	—	—	—	.591	1.181	1/2-13	1.125
CL-HOW10S	CL-HOW10A	10"	4-1/2	2	1-1/2	.630	1.181	M12	—
CL-HOW10S1	CL-HOW10A1			3					
CL-HOW12S	CL-HOW12A	12"	5-1/2	2	2	.710	1.181	M14	—
CL-HOW12S1	CL-HOW12A1			3					
CL-HOW7MA15S	CL-HOW7MA15A	15"	5	2-1/2	2	.827	1.575	M16	—
CL-HOW27M15S	CL-HOW27M15A	15"	6	3	2-1/2	1.025	1.654	M20	—
CL-HOW15S	CL-HOW15A	15"	6-1/2	3	2-1/2	1.025	1.970	M20	—
CL-HOW15S1	—			4					

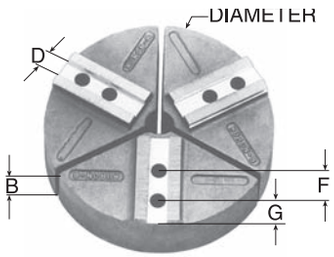

Pie-Shaped Soft Jaws

PIE-SHAPED SOFT JAWS

PART NO. (SINGLE JAW)			CHUCK	DIA-	B	CRITICAL DIMENSIONS			
ALUMINUM	CAST IRON	STEEL	SIZE	METER	HEIGHT	D	F	G	SCREW SIZE
—	—	—	6"	—	—	.472	.787	.59	M10
CL-HOW8P	—	—	8"	8	2	.551	.985	1.02	M12
CL-HOW8P1	—	—			4				
—	—	—	10"	—	—	.591	1.181	1.12	1/2-13
CL-HOW10P	—	—	10"	10	2	.630	1.181	.82	M12
CL-HOW10P1	—	—			4				
CL-HOW12P	—	—	12"	12	2	.710	1.181	1.19	M14
CL-HOW12P1	—	—			4				
CL-HOW15-12P	—	—		15	3			2.69	
CL-HOW18-12P	—	—		18	3			4.19	
CL-HOW7MA15P	—	—	15"	15	3	.827	1.575	1.80	M16
CL-HOW7MA15P1	—	—			4				
CL-HOW27M15P	—	—	15"	15	3	1.02	1.654	1.53	M20
CL-HOW15P	—	—	15"	15	3	1.02	1.970	2.78	M20
CL-HOW15P1	—	—			4				

Carr Lane®
MANUFACTURING CO.
4200 Carr Lane Ct., P.O. Box 191970
St. Louis, Missouri 63119-7970 USA
Phone: 314-647-6200, FAX: 314-647-5736
Web Site: www.carrlane.com

(Rev. 6-08)

HOWA POWER CHUCKS (INCH SERRATIONS)

1/16" x 90° serrations

HO12M SERIES

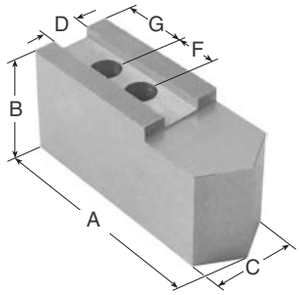

Pointed Soft Jaws

POINTED SOFT JAWS

PART NO. (SINGLE JAW)		CHUCK SIZE	A LENGTH	B HEIGHT	C WIDTH	CRITICAL DIMENSIONS			
STEEL	ALUMINUM					D	F	SCREW SIZE	G
CL-HOW12MA8S	CL-HOW12MA8A	8"	4	2	1-1/2	.669	.984	1/2-13	—
CL-PH1204S	—	10"	4	2	2	.827	1.181	1/2-13	—
—	CL-PH1204A		6	2					
CL-PH1205S	CL-PH1205A			3					
CL-PH1206S	CL-PH1206A			4					

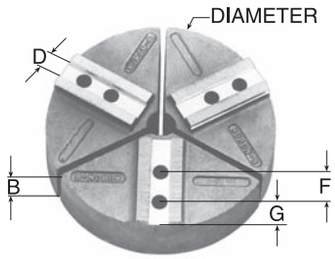

Pie-Shaped Soft Jaws

PIE-SHAPED SOFT JAWS

PART NO. (SINGLE JAW)			CHUCK SIZE	DIA-METER	B HEIGHT	CRITICAL DIMENSIONS			
ALUMINUM	CAST IRON	STEEL				D	F	G	SCREW SIZE
CL-HOW12MA8P	—	—	8"	8	2	.669	.984	1.02	1/2-13
CL-HOW12MA8PI	—	—			4				
CL-SMWEF100AP	—	—	10"	10	2	.827	1.187	1.94	1/2-13
CL-SMWEF101AP	—	—			4				

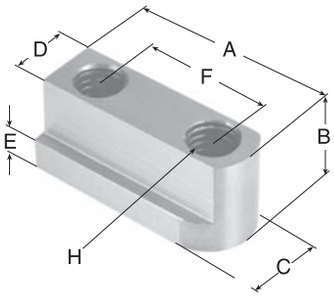

Jaw Nuts

JAW NUTS

PART NO. (SINGLE NUT)	CHUCK SIZE	A	B	C	CRITICAL DIMENSIONS			
					D	E	F	H THREAD
CL-HO12M8-JN	8"	1.77	1.102	.906	.669	.393	.984	1/2-13
CL-HO12MA10-JN	10"	1.97	1.181	1.102	.827	.433	1.181	1/2-13

Carr Lane MANUFACTURING CO.
4200 Carr Lane Ct., P.O. Box 191970
St. Louis, Missouri 63119-7970 USA
Phone: 314-647-6200, FAX: 314-647-5736
Web Site: www.carrlane.com

(Rev. 4-08)

MATSUMOTO, SEIKI, SMW, AUTOBLOK, ATS, BTC, MMK, NIKKO, STRONG, AND SCHUNK POWER CHUCKS (METRIC SERRATIONS)

1.5mm x 60° serrations

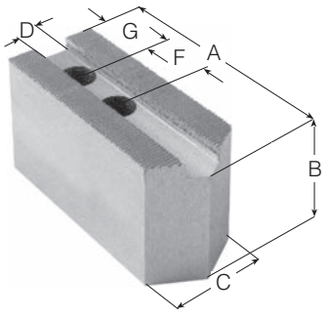

Pointed Soft Jaws

POINTED SOFT JAWS

PART NO. (SINGLE JAW) STEEL	PART NO. (SINGLE JAW) ALUMINUM	CHUCK SIZE	A LENGTH	B HEIGHT	C WIDTH	CRITICAL DIMENSIONS D	CRITICAL DIMENSIONS F	CRITICAL DIMENSIONS SCREW SIZE	G
—	—	5"	—	—	—	.400	.748	M8	—
CL-SUG5SSTS	CL-SUG5ASTS	5"	2-1/2	1-1/2	1	.433	.669	M8	—
—	—	5"	—	—	—	.474	.630	5/16-18	—
CL-SUG6SSTS	CL-SUG6ASTS	6"	3	1-1/2	1-1/4	.433	.985	M8 or 5/16-18	—
CL-SUG6S1STS	CL-SUG6A1STS			2					
CL-SUG6S2STS	CL-SUG6A2STS			3					
—	—	8"	—	—	—	.669	.905	M12	—
CL-KTT8S	CL-KTT8A	8"	4	2	1-1/2	.551	.985	M12 or 7/16-14	—
CL-KTT8S1	CL-KTT8A1			3					
CL-KTT8S2	CL-KTT8A2			4					
CL-SUG8SSTS	—			2			1.181	M10	—
CL-SUG8S1STS	CL-SUG8ASTS			3					
—	—	10"	——	—	——	.827	1.181	M16	—
CL-KTT10S	CL-KTT10A	10"	4-1/2	2	1-1/2	.630	1.181	M12	—
CL-KTT10S1	CL-KTT10A1			3					
CL-KTT10S4	CL-KTT10A4			4					
CL-KTT10S3	CL-KTT10A3		5-1/2	3	2				
CL-MTT10S	CL-KTT10A3	10"	4-1/2	2	1-1/2	.630	1.250	M12 or 1/2-13	—
CL-MTT10S1	CL-MTT10A			3					
—	CL-MTT10A1								
CL-KTT12S	CL-KTT12A	11 & 12"	5-1/2	2	2	.710	1.181	M14	—
CL-KTT12S1	CL-KTT12A1			3					
CL-KTT12S4	CL-KTT12A4			4					
CL-SEIKI12S	CL-SEIKI12A	12"	4-1/4	2	1-1/2	.712	1.26	M14	—
CL-SEIKI12S1	CL-SEIKI12A1			3					
CL-SUG12SSTM	CL-SUG12ASTM	12"	5-1/2	2	2	.788	1.378	M12	—
CL-SUG14SSTG	CL-SUG14ASTG	14"	6-5/16	3	2	.827	1.772	M16	—
—	—	14 & 15"			2	.827	1.575	5/8-11	.88
CL-MTT15S	CL-MTT15A	15"	6-1/2	3	2-1/2	.868	1.97	M20 or 3/4-10	—
CL-MTT15S1	CL-MTT15A1			4					

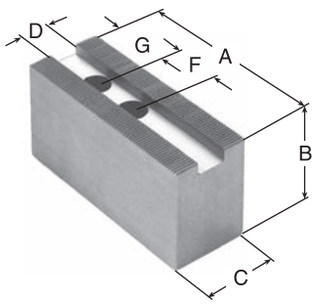

Square-Nose Soft Jaws

SQUARE-NOSE SOFT JAWS

PART NO. (SINGLE JAW) STEEL	PART NO. (SINGLE JAW) ALUMINUM	CHUCK SIZE	A LENGTH	B HEIGHT	C WIDTH	CRITICAL DIMENSIONS D	CRITICAL DIMENSIONS F	CRITICAL DIMENSIONS SCREW SIZE	G
—	—	5"	SEE POINTED SOFT JAWS						
—	—	5"							
—	—	5"	SEE PIE-SHAPED SOFT JAWS						
—	—	6"	SEE POINTED SOFT JAWS						
—	—	8"	SEE PIE-SHAPED SOFT JAWS						
CL-KTT8S-SQ	CL-KTT8A-SQ	8"	4	2	1-1/2	.551	.985	M12 or 7/16-14	—
CL-KTT8S2-SQ	—			4					
—	—	8"	SEE POINTED SOFT JAWS						

Carr Lane®
MANUFACTURING CO.
4200 Carr Lane Ct., P.O. Box 191970
St. Louis, Missouri 63119-7970 USA
Phone: 314-647-6200, FAX: 314-647-5736
Web Site: www.carrlane.com

(Rev. 5-07)

MATSUMOTO, SEIKI, SMW, AUTOBLOK, ATS, BTC, MMK, NIKKO, STRONG, AND SCHUNK POWER CHUCKS (METRIC SERRATIONS)

SQUARE-NOSE SOFT JAWS (CONT)

PART NO. (SINGLE JAW) STEEL	PART NO. (SINGLE JAW) ALUMINUM	CHUCK SIZE	A LENGTH	B HEIGHT	C WIDTH	CRITICAL DIMENSIONS D	CRITICAL DIMENSIONS F	CRITICAL DIMENSIONS SCREW SIZE	CRITICAL DIMENSIONS G
CL-KTT10S-SQ	CL-KTT10A-SQ	10"	4-1/2	2	1-1/2	.630	1.181	M12	—
CL-KTT10S4-SQ	CL-KTT10A2-SQ			4					—
—	—	10"	4-1/2	2	1-1/2	.630	1.250	M12 or 1/2-13	—
—	—			3					—
—	—								—
CL-KTT12S3A-SQ	CL-KTT12AA-SQ	11&12"	5-1/2	2	2	.710	1.181	M14	—
CL-KTT12S5A-SQ	—			4					—
—	—	12"	SEE POINTED SOFT JAWS						
—	—	12"							
—	—	14"							
—	—	14 & 15"							
—	—	15"							

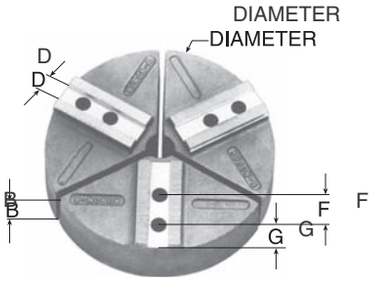

Pie-Shaped Soft Jaws

PIE-SHAPED SOFT JAWS

PART NO. (SINGLE JAW) ALUMINUM	PART NO. (SINGLE JAW) CAST IRON	PART NO. (SINGLE JAW) STEEL	CHUCK SIZE	DIA-METER	B HEIGHT	CRITICAL DIMENSIONS D	CRITICAL DIMENSIONS F	CRITICAL DIMENSIONS G	CRITICAL DIMENSIONS SCREW SIZE
—	—	—	5"	—	—	.400	.748	—	M8
CL-SUG5PSTS	—	—	5"	6	2	.433	.669	.49	M8
CL-AUTOBHM5P	—	—	5"	6	2	.474	.630	1.00	5/16-18
CL-SUG6PSTS	—	—	6"	6	2	.433	.985	.64	M8 or 5/16-18
CL-SUG6P1STS	—	—			4				
CL-KTT8P	CL-CI-KTT8P	CL-ST-KTT8P	8"	8	2	.551	.985	1.02	M12 or 7/16-14
CL-KTT8P1	CL-CI-KTT8P1	CL-ST-KTT8P1			4				
CL-KTT8P6	—	—			6				
CL-KTT10-8P	—	—		10	2			2.02	
CL-KTT10-8P1	—	—			4				
CL-KTT12-8P	—	—		12	2			3.02	
CL-SUG8PSTS	—	—	8"	8	2	.551	1.181	.98	M10
CL-SUG8P1STS	—	—			4				
CL-AUTOBHM8P	—	—	8"	8	2	.669	.905	.60	M12
CL-AUTOBHM8P1	—	—			4				
CL-KTT10P	CL-CI-KTT10P	CL-ST-KTT10P	10"	10	2	.630	1.181	1.32	M12
CL-KTT10P1	CL-CI-KTT10P1	CL-ST-KTT10P1			4				
CL-KTT10P6	—	—			6				
CL-KTT12-10P	—	—		12	2			2.32	
CL-KTT12-10P1	—	—			4				
CL-KTT15-10P	—	—		15	3			3.82	
CL-KTT15-10P1	—	—			4				
CL-KTT18-10P	—	—		18	3			5.32	
CL-KTT18-10P1	—	—			4				
CL-KTT21-10P1	—	—		21	4			6.82	
CL-MTT10P	—	—	10"	10	2	.630	1.250	.88	M12 or 1/2-13
CL-MTT10P1	—	—			4				
CL-AUTO10P	—	—	10"	10	2	.827	1.181	.82	M16

Carr Lane®
MANUFACTURING CO.
4200 Carr Lane Ct., P.O. Box 191970
St. Louis, Missouri 63119-7970 USA
Phone: 314-647-6200, FAX: 314-647-5736
Web Site: www.carrlane.com

(Rev. 4-08)

MATSUMOTO, SEIKI, SMW, AUTOBLOK, ATS, BTC, MMK, NIKKO, STRONG, AND SCHUNK POWER CHUCKS (METRIC SERRATIONS)

1.5mm x 60° serrations

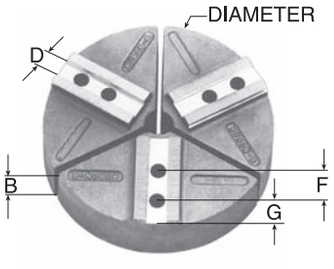

Pie-Shaped Soft Jaws

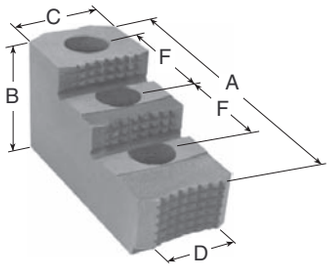

Two-Step Reversible Hard Jaws

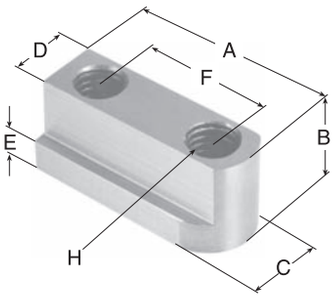

Jaw Nuts

PIE-SHAPED SOFT JAWS (CONT)

PART NO. (SINGLE JAW) ALUMINUM	CAST IRON	STEEL	CHUCK SIZE	DIA-METER	B HEIGHT	CRITICAL DIMENSIONS D	F	G	SCREW SIZE
CL-KTT12P	CL-CI-KTT12P	CL-ST-KTT12P	11 & 12"	12	2	.710	1.181	2.51	M14
CL-KTT12P1	CL-CI-KTT12P1	CL-ST-KTT12P1			4				
CL-KTT15-12P	—	—		15	3			4.01	
CL-KTT15-12P1	—	—			4				
CL-KTT18-12P	—	—		18	3			5.51	
CL-KTT18-12P1	—	—			4				
CL-KTT21-12P2	—	—		21	2			7.01	
CL-KTT21-12P	—	—			3				
CL-KTT21-12P1	—	—			4				
CL-SEIKI12P	—	—	12"	12	2-1/2	.712	1.260	1.62	M14
CL-SUG12PSTM	—	—	12"	12	2-1/2	.788	1.378	1.18	M12
CL-SUG12P1STM	—	—			5				
CL-SUG14PSTG	—	—	14"	15	3	.827	1.772	1.04	M16
—	—	—	14 & 15"	—	—	.827	1.575	.88	5/8-11
—	—	—							
CL-MTT15P	—	—	15"	15	3	.868	1.970	1.40	M20 or 3/4-10
CL-MTT15P1	—	—			4				
CL-MTT15P6	—	—			6				
CL-MTT18-15P	—	—		18	3			2.90	
CL-MTT18-15P1	—	CL-ST-MTT18-15P1			4				
CL-MTT21-15P	—	CL-ST-MTT21-15P		21	3			4.40	
CL-MTT21-15P1	—	CL-ST-MTT21-15P1			4				

TWO-STEP REVERSIBLE HARD JAWS (SET OF 3)

PART NO. (MATCHED SET OF 3 JAWS)	CHUCK SIZE	A LENGTH	B HEIGHT	C WIDTH	HEIGHT TO 1ST STEP	HEIGHT TO 2ND STEP	CRITICAL DIMENSIONS D	F	SCREW SIZE
—	6"	—	—	—	—	—	.433	.985	M8 or 5/16-18
CL-KTT8-HJDS-SETOF3	8"	3.25	2.25	1.50	1.25	1.87	.551	.985	M12 or 7/16-14
—	8"	—	—	—	—	—	.551	1.181	M10
—	8"	—	—	—	—	—	.669	.905	M12
CL-KTT10-HJDS-SETOF3	10"	4.00	2.50	1.50	1.37	1.94	.630	1.181	M12
—	10"	—	—	—	—	—	.630	1.250	M12 or 1/2-13
CL-KTTB212-HJDS-SETOF3	10"	4.25	2.75	2.00	1.25	2.00	.827	1.181	M16
CL-KTT12-HJDS-SETOF3	11 & 12"	4.25	2.75	2.00	1.12	1.80	.710	1.181	M14
—	12"	—	—	—	—	—	.712	1.260	M14
—	12"	—	—	—	—	—	.788	1.378	M12
—	14"	—	—	—	—	—	.827	1.772	M16
—	14 & 15"	—	—	—	—	—	.827	1.575	5/8-11
—	15"	5.96	3.00	2.50	1.56	2.25	.868	1.970	M20 or 3/4-10

JAW NUTS

PART NO. (SINGLE NUT)	CHUCK SIZE	A	B	C	CRITICAL DIMENSIONS D	E	F	H THREAD
CL-JNS-6.5	6"	1.57	.79	.69	.433	.295	.985	5/16-18
CL-KTTB208-JN	8"	1.88	.81	.81	.551	.335	.985	M12
CL-NF208-JN		1.75	.88	.80		.340		7/16-14
—	8"	—	—	—	.551	—	1.181	M10
—	8"	—	—	—	.669	—	.905	M12
CL-KTTB210-JN	10"	2.00	.85	.89	.630	.335	1.181	M12
CL-JNS10	10"	2.05	.90	.90	.630	.315	1.250	1/2-13
CL-KTTB212-JN	10"	2.25	.86	1.16	.827	.217	1.181	M16
CL-KTT12-JN	11 & 12"	2.25	1.30	1.04	.710	.530	1.181	M14
—	12"	—	—	—	.712	—	1.260	M14
—	12"	—	—	—	.788	—	1.378	M12
—	14"	—	—	—	.827	—	1.772	M16
CL-HO7MA15-JN	14 & 15"	~~2.56~~	~~1.14~~	~~1.00~~	.827	~~.374~~	1.575	5/8-11
CL-JNS15	15"	3.15	1.55	1.33	.868	.767	1.970	3/4-10

Carr Lane MANUFACTURING CO.
4200 Carr Lane Ct., P.O. Box 191970
St. Louis, Missouri 63119-7970 USA
Phone: 314-647-6200, FAX: 314-647-5736
Web Site: www.carrlane.com

(Rev. 4-07)

POWERHOLD, AUTOBLOK, ERICKSON, GAMET, ROHM, BERGMAN, AND SCHUNK POWER CHUCKS (INCH SERRATIONS)

1/16" x 90° serrations
(3/32" x 90° serrations
on jaws for 16" and
larger chucks)

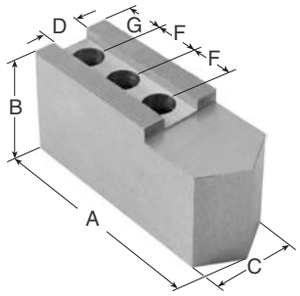

Pointed Soft Jaws

POINTED SOFT JAWS

PART NO. (SINGLE JAW) STEEL	PART NO. (SINGLE JAW) ALUMINUM	CHUCK SIZE	A LENGTH	B HEIGHT	C WIDTH	CRITICAL DIMENSIONS D	CRITICAL DIMENSIONS F	CRITICAL DIMENSIONS SCREW SIZE
—	—	5" Rohm	—	—	—	.393	.511	M6
—	—	5" Autoblok	—	—	—	.474	.630	5/16-18
CL-PH6S	CL-PH6A	5 & 6"	3	1-1/2	1	.433	.718	5/16-18
CL-PH6S1	CL-PH6A1			2				
CL-PH6S2	CL-PH6A2			3				
—	—	6" Bergman	—	—	—	.474	.827	M12
CL-PH6.5S	CL-PH6.5A	6.5"	3	1-1/2	1-1/4	.551	.718	3/8-16
CL-SMW8S	CL-SMW8A	8"	4	2	1-1/2	.669	.875	1/2-13
CL-SMW8S1	CL-SMW8A1			3				
CL-PH10S	CL-PH10A	8 & 10"	4-1/2	2	1-1/2	.551	.875	3/8-16
CL-PH10S1	CL-PH10A1			3				
—	—	8 & 10" Autoblok	—	—	—	.474	.866	3/8-16
CL-PH12S	CL-PH12A	10, 11 & 12"	5-1/2	2	1-3/4	.787	1.187	1/2-13
CL-PH12S1	CL-PH12A1			3	2			
CL-PH12S2	CL-PH12A2			4				
CL-SMW12S	CL-SMW12A	10 & 12.5"	5-1/2	2	2	.826	1.187	1/2-13
CL-SMW12S1	CL-SMW12A1			3				
CL-SMW12S2	CL-SMW12A2			4				
CL-PH15S	CL-PH15A	14 & 15"	6-1/2	3	2-1/2	.826	1.562	5/8-11
CL-PH15S1	CL-PH15A1			4				
CL-PH15S5	CL-PH15A5			5				
CL-SMW16S	CL-SMW16A	16, 18 & 20"	6-1/2	3	2-1/2	1.004	1.562	3/4-10
CL-SMW16S1	CL-SMW16A1			4				
CL-SMW20S	CL-SMW20A		8-1/4	3				
—	—	18" Gamet	—	—	—	1.181	1.960	3/4-10
CL-AUTO18S1	CL-AUTO18A1	24" Autoblok	10	4	2-1/2	1.102	2.700	3/4-10
CL-AB20S	CL-AB20A	24" Autoblok	6.7	2-1/2	2-1/2	1.102	2.990	3/4-10
CL-AB20S1	CL-AB20A1			4				
CL-AUTO24IDNS	CL-AUTO24IDNA	24" Autoblok	11	4	3	1.102	2.750	3/4-10
CL-AUTO24IDNS1	CL-AUTO24IDNA1			6				
CL-SMW25S	CL-PH25A	25 & 31.5"	11	4	3	1.181	2.500	1"-8

Carr Lane®
MANUFACTURING CO.
4200 Carr Lane Ct., P.O. Box 191970
St. Louis, Missouri 63119-7970 USA
Phone: 314-647-6200, FAX: 314-647-5736
Web Site: www.carrlane.com

(Rev. 11-09)

POWERHOLD, AUTOBLOK, ERICKSON, GAMET, ROHM, BERGMAN, AND SCHUNK POWER CHUCKS (INCH SERRATIONS)

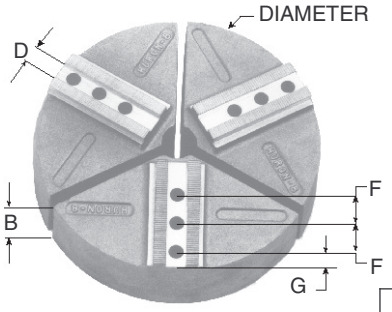

Pie-Shaped Soft Jaws

PIE-SHAPED SOFT JAWS

PART NO. (SINGLE JAW)			CHUCK SIZE	DIA-METER	B HEIGHT	CRITICAL DIMENSIONS			
ALUMINUM	CAST IRON	STEEL				D	F	G	SCREW SIZE
CL-ROHM5P	—	—	5" Rohm	6	2	.393	.511	1.49	M6
CL-AUTO5P	—	—	5" Autoblok	6	2	.474	.630	.96	5/16-18
CL-PH6P	—	—	5 & 6"	6	2	.433	.718	.84	5/16-18
CL-PH6P1	—	—			4				
CL-BERG6P	—	—	6" Bergman	6	2	.474	.827	1.17	5/16-18
CL-PH6.5P	—	—	6.5"	6	2	.551	.718	1.13	3/8-16
CL-PH6.5P1	—	—			4				
—	—	—	7.5"	—	—	.669	.812	—	7/16-14
—	—	—	8"	—	—	.669	.875	.62	1/2-13
CL-PH8-10P	—	—	8 & 10"	8	2	.551	.875	.44	3/8-16
CL-PH8-10P1	—	—			4				
CL-PH10P	—	—		10	2			1.50	
CL-PH10P1	—	—			4				
CL-AUTOONCA8P	—	—	8 & 10" Autoblok	8	2	.474	.866	.63	3/8-16
CL-AUTOONCA8P1	—	—			4				
CL-PH10-12P	—	—	10, 11 & 12"	10	2	.787	1.500	1.00	1/2-13
CL-PH10-12P1	—	—			4				
CL-PH12P	—	—		12	2		1.187	2.00	
CL-PH12P1	—	—			4				
CL-PH15-12P	—	—		15	3			3.50	
CL-SMWEF100AP	—	—	10 & 12.5"	10	2	.826	1.187	1.94	1/2-13
CL-SMWEF101AP	—	—			4				
CL-SMWEF103AP	—	—			8				
CL-PH15P	—	—	14 & 15"	15	3	.826	1.562	2.50	5/8-11
CL-PH15P1	—	—			4				
CL-PH18-15P	—	—		18	3			4.00	
CL-PH18-15P1	—	—			5				
CL-PH21-15P	—	—		21	3			5.50	
CL-PH24-15P	—	—		24	3			7.00	
CL-SMWEF1500AP	—	—	16, 18 & 20"	15	3	1.004	1.562	2.81	3/4-10
CL-SMWEF18-1500AP3	—	—		18	3			2.75	
CL-SMWEF18-1500AP	—	—			4			4.31	
CL-SMWEF1800AP	—	—			4		2.362	1.95	
CL-SMWEF2000AP	—	—		20	4			2.95	
CL-SMWEF2400AP	—	—		24	4		1.562	2.81	
CL-SMWEF2800AP	—	—		28	4			4.81	
CL-GAM1800AP	—	—	18" Gamet	18	4	1.181	1.960	2.35	3/4-10
—	—	—	24" Autoblok	—	—	1.102	2.750	—	3/4-10
—	—	—	25 & 31.5"	—	—	1.181	2.500	—	1"-8

Carr Lane MANUFACTURING CO.
4200 Carr Lane Ct., P.O. Box 191970
St. Louis, Missouri 63119-7970 USA
Phone: 314-647-6200, FAX: 314-647-5736
Web Site: www.carrlane.com

(Rev. 4-08)

POWERHOLD, AUTOBLOK, ERICKSON, GAMET, ROHM, BERGMAN, AND SCHUNK POWER CHUCKS (INCH SERRATIONS)

PIE-SHAPED SOFT JAWS

PART NO. (SINGLE JAW)			CHUCK SIZE	DIA-METER	B HEIGHT	CRITICAL DIMENSIONS			
ALUMINUM	CAST IRON	STEEL				D	F	G	SCREW SIZE
CL-SMWEF1500AP	—	—	16, 18 & 20"	15	3	1.004	1.562	2.81	3/4-10
CL-SMWEF18-1500AP3	—	—		18	3			2.75	
CL-SMWEF18-1500AP	—	—			4			4.31	
CL-SMWEF1800AP	—	—			4		2.362	1.95	
CL-SMWEF2000AP	—	—		20	4			2.95	
CL-SMWEF2400AP	—	—		24	4		1.562	2.81	
CL-SMWEF2800AP	—	—		28	4			4.81	
CL-GAM1800AP	—	—	18" Gamet	18	4	1.181	1.960	2.35	3/4-10
—	—	—	24" Autoblok	—	—	1.102	2.750	—	3/4-10
—	—	—	25 & 31.5"	—	—	1.181	2.500	—	1"-8

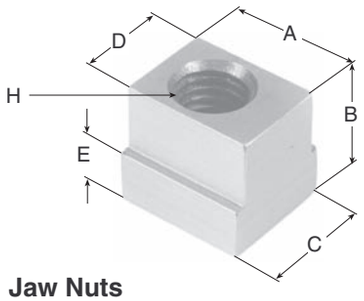

Jaw Nuts

JAW NUTS

PART NO. (SINGLE NUT)	CHUCK SIZE	A	B	C	CRITICAL DIMENSIONS		
					D	E	H THREAD
—	5" Rohm	—	—	—	.393	—	M6
—	5" Autoblok	—	—	—	.474	—	5/16-18
CL-TN-P6	5 &6"	.62	.581	.530	.433	.252	5/16-18
—	6" Bergman	—	—	—	.474	—	5/16-18
—	6.5"	—	—	—	.551	—	3/8-16
—	7.5"	—	—	—	.669	—	7/16-14
—	8"	—	—	—	.669	—	1/2-13
CL-PH10-JN	8 & 10"	.75	.606	.750	.551	.252	3/8-16
—	8 & 10" Autoblok	—	—	—	.474	—	3/8-16
CL-PH12-JN	10, 11 &12"	1.00	.850	1.000	.787	.325	1/2-13
—	10 & 12.5"	—	—	—	.826	—	1/2-13
CL-PH15-JN	14 & 15"	1.12	1.000	1.000	.826	.430	5/8-11
—	16, 18 & 20"	—	—	—	1.004	—	3/4-10
—	18" Gamet	—	—	—	1.181	—	3/4-10
—	24" Autoblok	—	—	——	1.102	—	3/4-10
—	25 & 31.5"	—	—	—	1.181	—	1"-8

Carr Lane®
MANUFACTURING CO.
4200 Carr Lane Ct., P.O. Box 191970
St. Louis, Missouri 63119-7970 USA
Phone: 314-647-6200, FAX: 314-647-5736
Web Site: www.carrlane.com

(Rev. 6-08)

SMW POWER CHUCKS (INCH SERRATIONS)

1/16" x 90° serrations (3/32" x 90° serrations on jaws for 16" and larger chucks.)

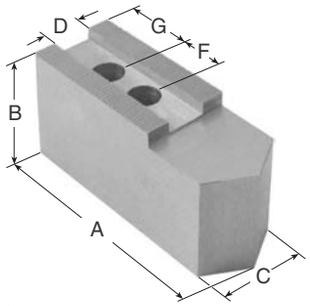

Pointed Soft Jaws

POINTED SOFT JAWS

PART NO. (SINGLE JAW) STEEL	PART NO. (SINGLE JAW) ALUMINUM	CHUCK SIZE	A LENGTH	B HEIGHT	C WIDTH	CRITICAL DIMENSIONS D	F	SCREW SIZE
CL-SMW6.5S	CL-SMW6.5A	6.5"	3	1-1/2	1-1/2	.551	.875	3/8-16
CL-SMW6.5S1	CL-SMW6.5A1			2				
CL-SMW6.5S2	CL-SMW6.5A2			3				
CL-SMW8S	CL-SMW8A	8"	4	2	1-1/2	.669	.875	1/2-13
CL-SMW8S1	CL-SMW8A1			3				
CL-PH1204S	CL-PH1204A	10 & 2.5"	5-1/2	2	2	.826	1.187	1/2-13
CL-PH12S1	CL-PH12A1			3				
CL-PH12S2	CL-PH12A2			4				
CL-SMW16S	CL-SMW16A	16, 18 & 20"	6-1/2	3	2-1/2	1.004	1.562	3/4-10
CL-SMW16S1	CL-SMW16A1			4				
CL-SMW20S	CL-SMW20A		8-1/4	3				
CL-SMW25S	CL-PH25A	25 & 31.5"	11	4	3	1.181	2.500	1"-8

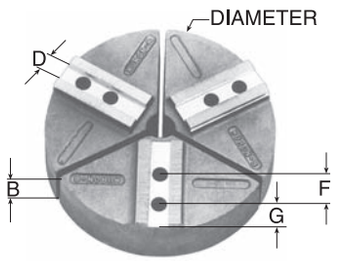

Pie-Shaped Soft Jaws

PIE-SHAPED SOFT JAWS

PART NO. (SINGLE JAW) ALUMINUM	PART NO. (SINGLE JAW) CAST IRON	PART NO. (SINGLE JAW) STEEL	CHUCK SIZE	DIA-METER	B HEIGHT	CRITICAL DIMENSIONS D	F	G	SCREW SIZE
—	—	—	6.5"	—	—	.551	.875	.50	3/8-16
—	—	—	8"	—	—	.669	.875	.62	1/2-13
CL-SMW10P	—	—	10"	10	2	.826	1.187	1.44	1/2-13
CL-SMW10P1	—	—			4				
CL-SMW12P	—	—	12.5"	12	2	.826	1.187	2.50	1/2-13
CL-SMW12P1	—	—			4				
CL-SMW15-16P1	—	—	16, 18 & 20"	15	4	1.004	1.562	2.81	3/4-10
CL-SMW18-16P	—	—		18	3			2.75	
CL-SMW18-16P1	—	—			4			4.31	
CL-SMW21-20P1	—	—		20	4		2.362	2.95	
CL-SMW24-25P1	—	—		24	4		1.562	2.81	
CL-SMW28-25P1	—	—		28	4			4.81	

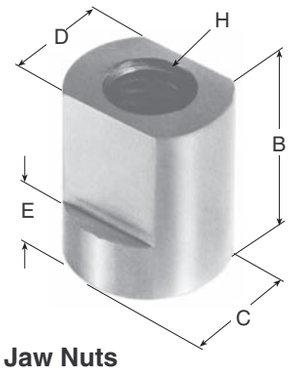

Jaw Nuts

JAW NUTS

PART NO. (SINGLE NUT)	CHUCK SIZE	B	C	CRITICAL DIMENSIONS D	E	H THREAD
CL-TN-SMW6.5	6.5"	1.04	.79	.551	.37	3/8-16
CL-TN-SMW8	8"	1.08	.91	.669	.37	1/2-13
CL-SMW10-JN	10 & 12.5"	1.10	1.17	.826	.42	1/2-13
CL-SMW16-JN	16, 18 & 20"	1.34	1.34	1.004	.57	3/4-10
CL-TN-SMW25	25 & 31.5"	1.75	1.77	1.181	.73	1"-8

Carr Lane®
MANUFACTURING CO.
4200 Carr Lane Ct., P.O. Box 191970
St. Louis, Missouri 63119-7970 USA
Phone: 314-647-6200, FAX: 314-647-5736
Web Site: www.carrlane.com

(Rev. 7-05)

PRATT BURNERD & ROHM POWER CHUCKS (INCH SERRATIONS)

1/16" x 90º serrations

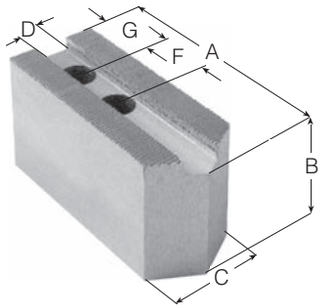

Pointed Soft Jaws

POINTED SOFT JAWS
PBA CONSTANT-GRIP SERIES

PART NO. (SINGLE JAW) STEEL	PART NO. (SINGLE JAW) ALUMINUM	CHUCK SIZE	A LENGTH	B HEIGHT	C WIDTH	CRITICAL DIMENSIONS D	CRITICAL DIMENSIONS F	CRITICAL DIMENSIONS SCREW SIZE	G
—	CL-A-PBA-17612-P	6"	2.00	1.50	1.00	.591	.810	M10	.472
CL-PBA-17612-P	—			1.25	1.25				
CL-HOW12MA8S	CL-HOW12MA8A	8 & 10"	4.00	2.00	1.50	.669	.984	M12	
—	CL-A-PBA-32612-P	12"	5.50	2.00	2.00	.830	1.25	M16	.670
CL-PBA-32612-P	—			2.50					
—	CL-A-PBA-38612-P	15"	5.75	2.00	2.00	.830	1.50	M16	.670
CL-PBA-38612-P	—			2.50	2.50				

POINTED SOFT JAWS
PBA INTERNATIONAL SERIES

CL-PBA-32512-P	CL-A-PBA-32512-P	12"	5.50	2.50	2.00	.826	1.25	M16	.629
—	—	15"	SEE STANDARD SOFT JAWS						

POINTED SOFT JAWS
PBA MKII AND ROHM LVE SERIES

—	CL-A-2740-17512-P	6.5"	2-3/4	1-1/2	1	.510	.709	M8	.410
CL-2740-17512-P	—				1-1/4				
CL-2740-21512-P	CL-A-2740-21512-P	8"	3-3/4	2	1-1/2	.669	.866	M10	.750
—	CL-A-2740-26512-P	10"	4-3/4	2	1-1/2	.826	.984	M12	.550
CL-2740-26512-P	—				1-3/4				
CL-2740-32512-P	—	12.5 & 14"	5-1/2	2-1/2	2	.830	1.181	M12	.750
—	CL-A-2740-32512-P			2					

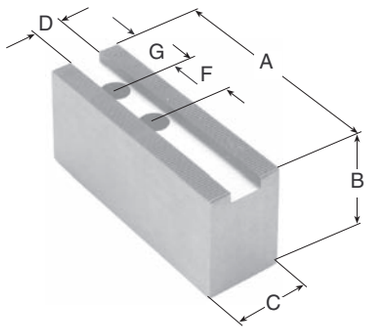

Square-Nose Soft Jaws

SQUARE-NOSE SOFT JAWS
PBA CONSTANT-GRIP SERIES

PART NO. (SINGLE JAW) STEEL	PART NO. (SINGLE JAW) ALUMINUM	CHUCK SIZE	A LENGTH	B HEIGHT	C WIDTH	CRITICAL DIMENSIONS D	CRITICAL DIMENSIONS F	CRITICAL DIMENSIONS SCREW SIZE	G
CL-PBA-17612	CL-A-PBA-17612	6"	2.00	1.25	1.25	.591	.810	M10	.472
CL-HOW12MA8S-SQ	CL-HOW12MA8A-SQ	8 & 10"	4.00	2.00	1.50	.669	.984	M12	
CL-PBA-32612	CL-A-PBA-32612	12"	5.50	2.50	2.00	.830	1.25	M16	.670
CL-PBA-38612	CL-A-PBA-38612	15"	5.75	2.50	2.50	.830	1.50	M16	.670

SQUARE-NOSE SOFT JAWS
PBA INTERNATIONAL SERIES

—	CL-A-PBA-32512	12"	5.50	2.00	2.00	.826	1.25	M16	.629
CL-PBA-32512	—			2.50					
—	CL-A-PBA-40512	15"	6.00	2.50	2.00	1.00	1.75	M20	.670
CL-PBA-40512	—			3.00	2.25				

SQUARE-NOSE SOFT JAWS
PBA MKII AND ROHM LVE SERIES

—	CL-A-2740-17512	6.5"	2-3/4	1-1/2	1	.510	.709	.410	M8
CL-2740-17512	—				1-1/4				
CL-2740-21512	CL-A-2740-21512	8"	3-3/4	2	1-1/2	.669	.866	.750	M10
—	CL-A-2740-26512	10"	4-3/4	2	1-1/2	.826	.984	.550	M12
CL-2740-26512	—				1-3/4				
—	CL-A-2740-32512	12.5 & 14"	5-1/2	2	2	.830	1.181	.750	
CL-2740-32512	—			2-1/2					

Carr Lane®
MANUFACTURING CO.
4200 Carr Lane Ct., P.O. Box 191970
St. Louis, Missouri 63119-7970 USA
Phone: 314-647-6200, FAX: 314-647-5736
Web Site: www.carrlane.com

(Rev. 7-05)

FORKARDT POWER CHUCKS (INCH SERRATIONS)

1/16" x 90° serrations
(3/32" x 90° serrations on
jaws for 15.75-20" and larger)

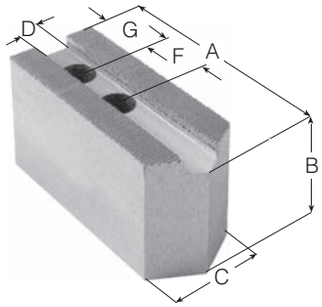

Pointed Soft Jaws

POINTED SOFT JAWS

PART NO. (SINGLE JAW) STEEL	ALUMINUM	CHUCK SIZE	A	B	C	CRITICAL DIMENSIONS D	F	SCREW SIZE	G
CL-FWB-11/70-P	—	6.25"	2-3/4	2	1-1/2	.670	.866	M12	.584
—	CL-A-FWB-11/70-P			1-1/2	1				
CL-FWB-11/90-P	CL-A-FWB-11/90-P	8-10"	3-3/4	2	1-1/2	.670	.866	M12	.900
CL-FWB-12-P	—	10-12"	4-3/4	2	1-3/4	.830	1.102	M16	1.178
—	CL-A-FWB-12-P				1-1/2				
CL-FWB-13-P	—	12-15.75"	5-1/2	2-1/2	2-1/2	1.003	1.378	M20	1.183
—	CL-A-FWB-13-P			2	2				
CL-FWB-23-P	CL-A-FWB-23-P	15.75-20"	5-3/4	2-1/2	2-1/2	1.003	1.378	M20	1.182

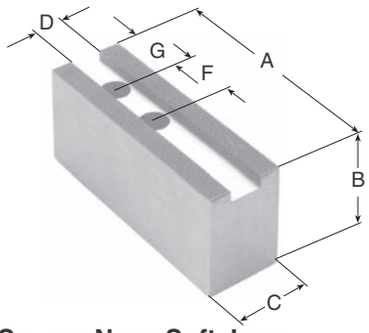

Square-Nose Soft Jaws

SQUARE-NOSE SOFT JAWS

PART NO. (SINGLE JAW) STEEL	ALUMINUM	CHUCK SIZE	A	B	C	CRITICAL DIMENSIONS D	F	SCREW SIZE	G
CL-FWB-11/70	—	6.25"	2-3/4	2	1-1/2	.670	.866	M12	.584
—	CL-A-FWB-11/70			1-1/2	1				
CL-FWB-11/90	CL-A-FWB-11/90	8-10"	3-3/4	2	1-1/2	.670	.866	M12	.900
CL-FWB-12	—	10-12"	4-3/4	2	1-3/4	.830	1.102	M16	1.178
—	CL-A-FWB-12				1-1/2				
CL-FWB-13	—	12-15.75"	5-1/2	2-1/2	2-1/2	1.003	1.378	M20	1.183
—	CL-A-FWB-13			2	2				
CL-FWB-23	CL-A-FWB-23	15.75-20"	5-3/4	2-1/2	2-1/2	1.003	1.378	M20	1.182

S-P ACME-KEY POWER CHUCKS LT SERIES

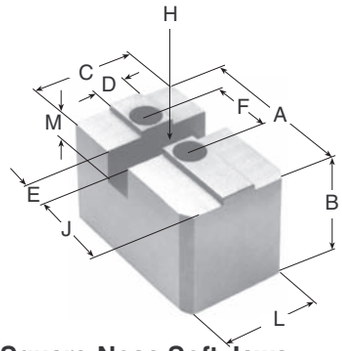

Square-Nose Soft Jaws

SQUARE-NOSE SOFT JAWS

PART NO. (SINGLE JAW) STEEL	ALUMINUM	CHUCK SIZE	A	B	C	CRITICAL DIMENSIONS D	E	F	SCREW SIZE	H	J	M
CL-8LT	CL-A-8LT	8"	3.187	2.00	2.00	.624	.570	1.25	1/2	#10-32	.984	.609
CL-10LT	CL-A-10LT	10"	3.875				.781	1.62			2.120	

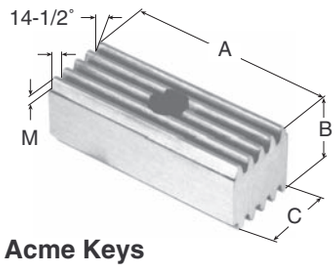

Acme Keys

ACME KEYS

PART NO. (SINGLE KEY)	CHUCK SIZE	A	B	C	SCREW SIZE
CL-8RAK	8"	2.00	.714	.569	M10
CL-10RAK	10"	2.00	.714	.780	M10

Carr Lane®
MANUFACTURING CO.
4200 Carr Lane Ct., P.O. Box 191970
St. Louis, Missouri 63119-7970 USA
Phone: 314-647-6200, FAX: 314-647-5736
Web Site: www.carrlane.com

(Rev. 7-10)

AUTOBLOK, CUSHMAN, HOWA, LOGANSPORT, AND PRATT BURNERD ACME-KEY POWER CHUCKS

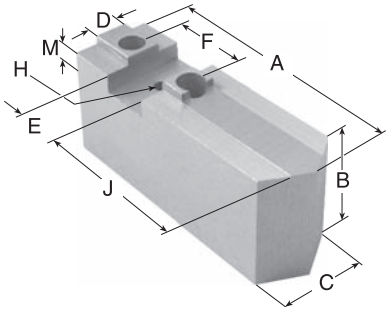

Pointed Soft Jaws

POINTED SOFT JAWS

PART NO. (SINGLE JAW) STEEL	ALUMINUM	CHUCK SIZE	A LENGTH	B HEIGHT	C WIDTH	CRITICAL DIMENSIONS D	E	F	SCREW SIZE	H	J	M
—	—	8"	—	—	—	.670	.601	1-1/4	1/2-13	#10-24	—	—
—	—	10"	—	—	—	.625	.781	1-5/8	1/2-13	SEE PIE-SHAPED SOFT JAWS		
—	—	10"	—	—	—	.750	1.031	1-3/4	1/2-13	5/16-18	—	—
—	CL-A-T10A5.5-P	12"	5-5/8	2	1-1/2	.750	1.031	1-3/4	1/2-13	5/16-18	3.56	—
—	CL-A-T10A5.5-EH-P			3-13/16								
CL-T10A5.5-P	—			2-5/16	1-3/4							
CL-T10A5.5-EH-P	—			3-13/16								
CL-12A04S1	—	12 & 15"	5-1/2	3	2	.875	1.031	2	5/8-11	5/16-18	3.22	.375
CL-12A04S2	—			4								
—	—	15"	—	—	—	1.000	1.531	2-1/2	3/4-10	3/8-16	—	—
CL-15A04S1	CL-15A04A10	15 & 18"	6-1/2	4	2-1/2	1.000	1.531	2-1/2	3/4-10	3/8-16	—	.375
—	—	21 & 24"	—	—	—	1.250	1.531	3	7/8-9	3/8-16	—	—

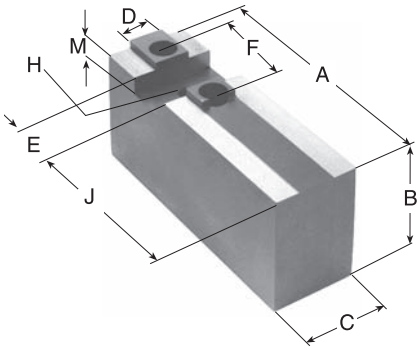

Square-Nose Soft Jaws

SQUARE-NOSE SOFT JAWS

PART NO. (SINGLE JAW) STEEL	ALUMINUM	CHUCK SIZE	A LENGTH	B HEIGHT	C WIDTH	CRITICAL DIMENSIONS D	E	F	SCREW SIZE	H	J	M
—	—	8"	—	—	—	.670	.601	1-1/4	1/2-13	#10-24	—	—
—	—	10"	—	—	—	.625	.781	1-5/8	1/2-13	SEE PIE-SHAPED SOFT JAWS		
CL-10A04S	CL-10A04A	10"	4-1/2	2	2	.750	1.031	1-3/4	1/2-13	5/16-18	2.28	.375
CL-10A04S1	CL-10A04A1			3								
CL-10A04S2	CL-10A04A2			4							2.72	
—	—	12"	—	—	—	.750	1.031	1-3/4	1/2-13	5/16-18	—	—
CL-12A04S1	CL-12A04A	12 & 15"	5-1/2	2	2	.875	1.031	2	5/8-11	5/16-18	3.22	.375
—	—	15"	—	—	—	1.000	1.531	2-1/2	3/4-10	3/8-16	—	—
—	CL-15A04A2	15 & 18"	6	4	2-1/2	1.000	1.531	2-1/2	3/4-10	3/8-16	2.97	.375
CL-21A04S	—	21 & 24"	8-1/4	3	3	1.250	1.531	3	7/8-9	3/8-16	—	.375
CL-21A04S1	CL-24A54A			4	2-1/2							

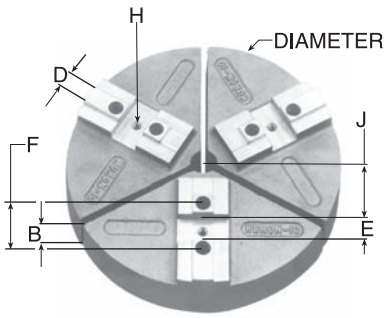

Pie-Shaped Soft Jaws

PIE-SHAPED SOFT JAWS

PART NO. (SINGLE JAW) ALUMINUM	CAST IRON	STEEL	CHUCK SIZE	DIA-METER	B HEIGHT	CRITICAL DIMENSIONS D	E	F	SCREW SIZE	H	J
CL-PBA8P1	—	—	8"	8	4	.670	.601	1-1/4	1/2-13	#10-32	1.90
CL-10A044	—	—	10 & 12"	10	2	.750	1.031	1-3/4	1/2-13	5/16-18	2.72
CL-10A04P1	—	—			4						
CL-12-10A04P	—	—		12	2						
CL-12-10A04P1	—	—			4						
CL-12A04P	—	—	12 & 15"	12	2	.875	1.031	2	5/8-11	5/16-18	3.72
CL-12A04P1	—	—			4						
CL-15-12A04P	—	—		15	3						
CL-15-12A04P1	—	—			4						
CL-18-12A04P1	—	—		18	4						
CL-15A04P	—	—	15"	15	3	1.000	1.531	2-1/2	3/4-10	3/8-16	4.47
CL-15A04P1	—	—			4						
CL-15A04P5	—	—			5						4.47
CL-15A04P6	—	—			6						
CL-15A04P8	—	—			8						
CL-18-15A04P	—	—		18	3						
CL-18-15A04P1	—	—			4						
CL-21-15A04P1	—	—		21	4						
CL-18-24A54P	—	—	18"	18	4	1.250	1.531	2-1/2	7/8-9	3/8-16	5.34
CL-18A54P1	—	—		18-1/2							5.72
CL-21-24A54P1	—	—	21 & 24"	21	4	1.250	1.531	3	7/8-9	3/8-16	6.47
CL-21-24A54P5	—	—			5						

Carr Lane MANUFACTURING CO.®
4200 Carr Lane Ct., P.O. Box 191970
St. Louis, Missouri 63119-7970 USA
Phone: 314-647-6200, FAX: 314-647-5736
Web Site: www.carrlane.com

(Rev. 7-10)

AUTOBLOK, CUSHMAN, HOWA, LOGANSPORT, AND PRATT BURNERD ACME-KEY POWER CHUCKS

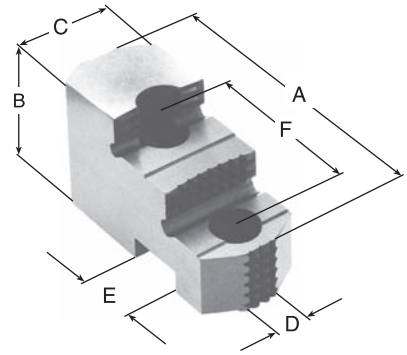

Two-Step Reversible Hard Jaws

TWO-STEP REVERSIBLE HARD JAWS (SET OF 3)

PART NO. (MATCHED SET OF 3 JAWS)	CHUCK SIZE	A LENGTH	B HEIGHT	C WIDTH	HEIGHT TO 1ST STEP	HEIGHT TO 2ND STEP	CRITICAL DIMENSIONS D	E	F	SCREW SIZE	H
—	8"	—	—	—	—	—	.670	.601	1-1/4	1/2-13	—
—	10"	—	—	—	—	—	.625	.781	1-5/8	1/2-13	—
CL-10A04-HJDS-SETOF3	10"	4.25	2.50	1.75	1.25	1.88	.750	1.031	1-3/4	1/2-13	5/16-18
—	12"	—	—	—	—	—	.750	1.031	2	1/2-13	—
CL-12A04-HJDS-SETOF3	12 & 15"	5.25	2.50	1.75	1.37	1.99	.875	1.031	2	5/8-11	5/16-18
CL-15A04-HJDS-SETOF3	15 & 18"	6.00	3.50	2.50	1.90	2.69	1.000	1.531	2-1/2	3/4-10	3/8-16
—	21 & 24"	—	—	—	—	—	1.250	1.531	3	7/8-9	—

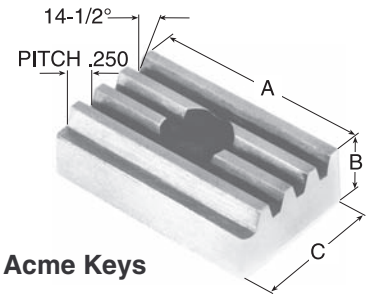

Acme Keys

ACME KEYS

PART NO. (SINGLE KEY)	CHUCK SIZE	A	B	C	SCREW SIZE	CAP SCREW PART NO.
CL-8LAK	8"	1.500	.381	.600	#10-24	CL-462001L
CL-12A04-MK	10 & 12"	1.687	.500	1.030	5/16-18	CL-463150L
CL-15A04-MK	15 & 18"	2.437	.500	1.530	3/8-16	CL-463775L
CL-21A04-MK	21 & 24"	2.875	.500	1.530	3/8-16	

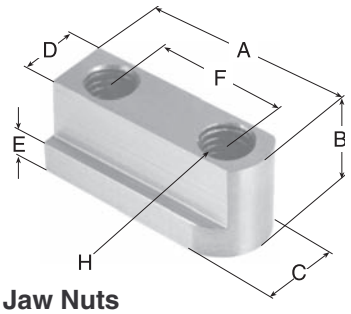

Jaw Nuts

JAW NUTS

PART NO. (SINGLE NUT)	CHUCK SIZE	A	B	C	CRITICAL DIMENSIONS D	E	F	H THREAD
CL-JN-8L	8"	2.00	1.00	1.03	.668	.440	1-1/4	1/2-13
—	10"	—	—	—	—	—	1-5/8	1/2-13
CL-10A04-JN	10 & 12"	2.50	.64	.94	.678	.381	1.75	1/2-13
CL-12A04-JN	12 & 15"	3.00	.76	1.06	.802	.440	2.00	5/8-11
CL-15A05-JN	15 & 18"	3.50	.93	1.25	.933	.530	2.50	3/4-10
CL-JN-C2124	21 & 24"	4.20	1.19	1.56	1.159	.684	3.00	7/8-9

Carr Lane®
MANUFACTURING CO.
4200 Carr Lane Ct., P.O. Box 191970
St. Louis, Missouri 63119-7970 USA
Phone: 314-647-6200, FAX: 314-647-5736
Web Site: www.carrlane.com

(Rev. 6-08)

CUSHMAN ACME-KEY POWER CHUCKS HIGH-SPEED 10-590 SERIES

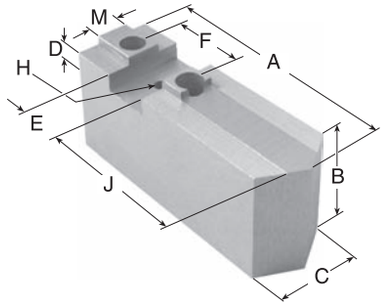

Pointed Soft Jaws

POINTED SOFT JAWS

PART NO. (SINGLE JAW) STEEL	ALUMINUM	CHUCK SIZE	A LENGTH	B HEIGHT	C WIDTH	CRITICAL DIMENSIONS D	E	F	SCREW SIZE	H	J
CL-12A04S12	—	12"	5-1/2	3	2	.875	1.031	2	5/8-11	5/16-18	3.22
CL-12A04S14	—			5							
—	—	15"	—	—	—	1.000	1.531	2-1/2	3/4-10	3/8-16	—
CL-15A04S8	—	18"	7	4	2-1/2	1.000	1.531	2-1/2	3/4-10	3/8-16	3.97
CL-15A04S9	—			6							
—	CL-15A04A10		7-1/4	4							4.22

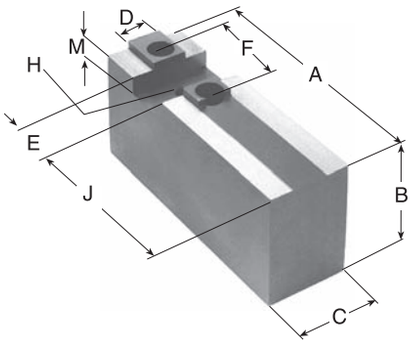

Square-Nose Soft Jaws

SQUARE-NOSE SOFT JAWS

PART NO. (SINGLE JAW) STEEL	ALUMINUM	CHUCK SIZE	A LENGTH	B HEIGHT	C WIDTH	CRITICAL DIMENSIONS D	E	F	SCREW SIZE	H	J
—	CL-12A04A	12"	5	2-1/2	2	.875	1.031	2	5/8-11	5/16-18	2.72
—	CL-12A04A14		5-1/2	5							3.22
—	—	15"	—	—	—	1.000	1.531	2-1/2	3/4-10	3/8-16	—
—	—										
—	CL-15A04A1	18"	6	4	2-1/2	1.000	1.531	2-1/2	3/4-10	3/8-16	2.97

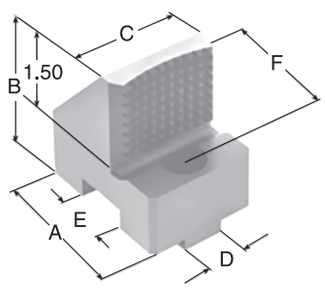

Single-Step Hard Jaws

SINGLE-STEP HARD JAWS (SET OF 3)

PART NO. (MATCHED SET OF 3 JAWS)	CHUCK SIZE	O.D. CHUCKING RANGE	A	B	C	HEIGHT TO STEP	CRITICAL DIMENSIONS D	E	F	SCREW SIZE
CL-T-12-025-053-SETOF3	12"	2.50-5.25	3.89	2.60	2.00	1.100	.75	1.031	1.75	1/2-13
CL-T-12-053-080-SETOF3		5.25-8.00	2.75							
CL-T-12-080-090-SETOF3		8.00-9.00	3.38							
CL-T-15-040-060-SETOF3	15"	4.00-6.00	4.90	2.80		1.310	1.00	1.531	2.50	3/4-10
CL-T-15-060-080-SETOF3		6.00-8.00	3.82							
CL-T-15-080-100-SETOF3		8.00-10.00	3.94							
CL-T-15-100-120-SETOF3		10.00-12.00	3.88							
CL-T-18-035-085-SETOF3	18"	3.50-8.50	5.48		2.25	1.312				
CL-T-18-085-135-SETOF3		8.50-12.50	3.88							
CL-T-18-100-150-SETOF3		10.50-15.00	3.88							

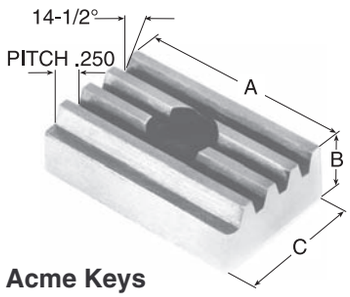

Acme Keys

ACME KEYS

PART NO. (SINGLE KEY)	CHUCK SIZE	A	CRITICAL DIMENSIONS B	C	H THREAD
CL-12A04-MK	12"	1-11/16	.500	1.031	5/16-18
CL-15A04-MK	15 & 18"	2-7/16	.500	1.531	3/8-16

Carr Lane MANUFACTURING CO.
4200 Carr Lane Ct., P.O. Box 191970
St. Louis, Missouri 63119-7970 USA
Phone: 314-647-6200, FAX: 314-647-5736
Web Site: www.carrlane.com

(Rev. 5-08)

BUCK, GISHOLT, S-P, WARNER & SWASEY, AND LOGANSPORT SQUARE-KEY POWER CHUCKS

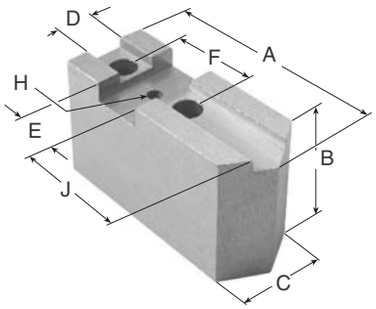

Pointed Soft Jaws

POINTED SOFT JAWS

PART NO. (SINGLE JAW) STEEL	PART NO. (SINGLE JAW) ALUMINUM	CHUCK SIZE	A LENGTH	B HEIGHT	C WIDTH	CRITICAL DIMENSIONS D	E	F	SCREW SIZE	H	J
CL-6S	CL-6A	6" Buck	3	1-1/2	1-1/4	.738	.377	1-11/16	5/16-18	None	1-1/2
CL-6S1	CL-6A1			2							
CL-7.5S	CL-7.5A	7.5" Buck	4	2	1-1/2	.866	.377	1-11/16	5/16-18	None	—
CL-7.5SI	CL-7.5A1			3							—
CL-8S	CL-8A	8"	4	2	1-1/2	.502	.752	1-7/16	3/8-16	1/4-20	—
CL-8LPS	CL-8LPA	8"	3-1/4	2	1-1/2	.667	.601	1-1/4	1/2-13	#10-32	1-29/32
CL-8LPSI	CL-8LPA1			3							
—	—	8"	—	—	—	.752	.743	1-7/16	1/2-13	1/4-28	—
CL-12S	CL-12A	10 & 12"	5-1/2	2	2	.752	.996	1-3/4	1/2-13	5/16-18	2.53
CL-12SI	CL-12A1			3							
CL-12S-5/8	CL-12A-5/8	12"	5-1/2	2	2	.752	.996	1-3/4	5/8-11	5/16-18	2.53
CL-12SI-5/8	CL-12A1-5/8			3							
CL-15S	CL-15A	15 & 18"	6-1/4	3	2-1/2	1.000	1.489	2-1/2	3/4-10	3/8-16	3.50
CL-15SI	CL-15AI			4							

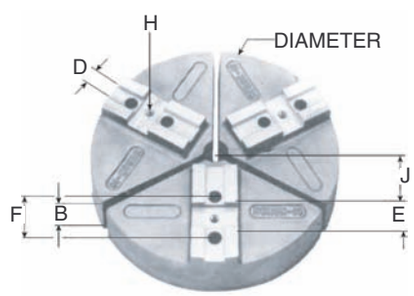

Pie-Shaped Soft Jaws

PIE-SHAPED SOFT JAWS

PART NO. (SINGLE JAW) ALUMINUM	PART NO. (SINGLE JAW) CAST IRON	PART NO. (SINGLE JAW) STEEL	CHUCK SIZE	DIA-METER	B HEIGHT	CRITICAL DIMENSIONS D	E	F	SCREW SIZE	H	J
CL-6P	—	—	6" Buck	6	2	.738	.377	1-11/16	5/16-18	NONE	1.44
CL-6P1	—	—			4						
CL-7.5P	—	—	7.5" Buck	8	2	.866	.377	1-11/16	5/16-18	NONE	1.44
CL-8APH1	—	—	8"	8	2	.502	.752	1-7/16	3/8-16	1/4-20	2.25
CL-8APH	—	—			4						
CL-8LPP	—	—	8"	8	2	.667	.601	1-1/4	1/2-13	#10-32	2.59
CL-8LPP1	—	—			4						
—	—	—	8"	—	—	.752	.743	1-7/16	1/2-13	—	—
CL-10P	—	—	10"	10	2	.752	.996	1-3/4	1/2-13	5/16-18	2.75
CL-10P1	—	—			4						
CL-10P6	—	—			6						
CL-18-10P	—	—		18	3						
CL-12P	—	—	12"	12	2-1/2	.752	.996	1-3/4	1/2-13	5/16-18	3.63
CL-12P1	—	—			5						
—	—	—	12"	—	—	.752	.996	1-3/4	5/8-11	5/16-18	—
—	—	—									
CL-15P	—	—	15"	15	2-1/2	1.000	1.489	2-1/2	3/4-10	3/8-16	4.26
CL-15P1	—	—			4						
CL-18P	—	—	18"	18	2	1.000	1.489	2-1/2	3/4-10	3/8-16	5.64
CL-18P1	—	—			4						
—	—	—	21"	—	—	1.000	1.489	3	3/4-10	3/8-16	—
—	—	—									
—	—	—	24"	—	—	1.000	1.489	3	3/4-10	3/8-16	—
—	—	—									

Carr Lane®
MANUFACTURING CO.
4200 Carr Lane Ct., P.O. Box 191970
St. Louis, Missouri 63119-7970 USA
Phone: 314-647-6200, FAX: 314-647-5736
Web Site: www.carrlane.com

(Rev. 6-08)

BUCK, GISHOLT, S-P, WARNER & SWASEY, AND LOGANSPORT SQUARE-KEY POWER CHUCKS

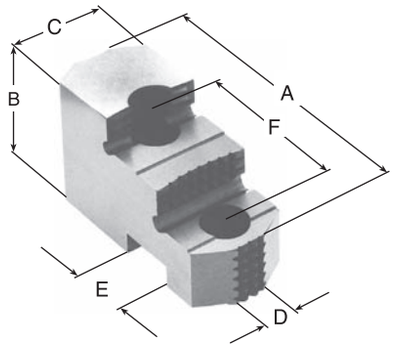

Two-Step Reversible Hard Jaws

TWO-STEP REVERSIBLE HARD JAWS (SET OF 3)

PART NO. (MATCHED SET OF 3 JAWS)	CHUCK SIZE	A LENGTH	B HEIGHT	C WIDTH	HEIGHT TO 1ST STEP	HEIGHT TO 2ND STEP	CRITICAL DIMENSIONS D	E	F	SCREW SIZE	H
—	8"	—	—	—	—	—	.502	.752	1-7/16	3/8-16	—
—	8"	—	—	—	—	—	.667	.601	1-1/4	1/2-13	—
—	8"	—	—	—	—	—	.752	.743	1-7/16	1/2-13	—
CL-12-HJDS-SETOF3	10 & 12"	4.00	2.50	1.75	1.25	1.87	.752	.996	1-3/4	1/2-13	5/16-18
CL-12-HJDS-58-SETOF3	12"	4.00	2.50	1.75	1.25	1.87	.752	.996	1-3/4	5/8-11	5/16-18
CL-15-HJDS-SETOF3	15 & 18"	4.75	3.00	2.25	1.50	2.25	1.000	1.489	2-1/2	3/4-10	3/8-16
—	21 & 24"	—	—	—	—	—	1.000	1.489	3	3/4-10	3/8-16

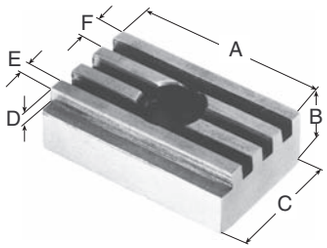

Square Keys

SQUARE KEY

PART NO. (SINGLE KEY)	CHUCK SIZE	A	B	CRITICAL DIMENSIONS C	D	E	F	SCREW SIZE	CAP SCREW PART NO.
—	8"	—	—	.752	—	—	—	1/4-20	—
—	8"	—	—	.601	—	—	—	#10-32	—
CL-8CC310	8"	1.41	.439	.743	.094	.076	.156	1/4-28	CL-452520L
CL-12-MK		1.31	.375		.101	.098	.20	1/4-20	CL-462531L
CL-15-MK	10 & 12"	1.68	.500	.993	.130	.124	.25	5/16-18	CL-463150L
CL-21-MK	15 & up	2.25		1.487				3/8-16	CL-463775L

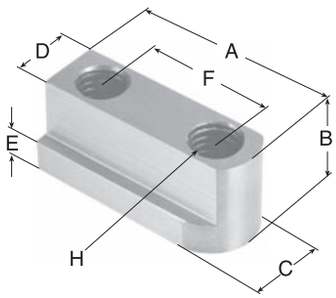

Jaw Nuts

JAW NUTS

PART NO. (SINGLE NUT)	CHUCK SIZE	A	B	C	CRITICAL DIMENSIONS D	E	F	H THREAD
—	8"	—	—	—	.502	—	1-7/16	3/8-16
—	8"	—	—	—	.667	—	1-1/4	1/2-13
CL-WC8-JN	8"	2.11	1	.99	.752	.376	1-7/16	1/2-13
CL-SP12-JN	10 & 12"	2.44	1	.94	.752	.381	1-3/4	1/2-13
CL-SP12-JN-58	12"	2.50	1	1.06	.752	.440	1-3/4	5/8-11
CL-SP15-JN	15 & 18"	3.75	1-1/4	1.25	1.000	.530	2-1/2	3/4-10
—	21 & 24"	—	—	—	1.000	—	—	—

Carr Lane®
MANUFACTURING CO.
4200 Carr Lane Ct., P.O. Box 191970
St. Louis, Missouri 63119-7970 USA
Phone: 314-647-6200, FAX: 314-647-5736
Web Site: www.carrlane.com

(Rev. 4-08)

MEDIUM-DUTY TONGUE & GROOVE CHUCKS

(ATLAS, BERGMAN, BISON, BUCK, CUSHMAN, HURON, PRATT BERNERD, ROHM, SCA, S-P, WARNER & SWASEY, AND YUASA)

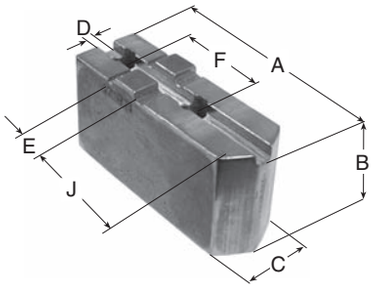

Pointed Soft Jaws

POINTED SOFT JAWS

PART NO. (SINGLE JAW) STEEL	PART NO. (SINGLE JAW) ALUMINUM	CHUCK SIZE	A LENGTH	B HEIGHT	C WIDTH	CRITICAL DIMENSIONS D	E	F	SCREW SIZE	J
CL-TG4MDS	CL-TG4MDA	4"	2	1-1/4	5/8	.250	.437	1-3/16	SEE STANDARD SOFT JAWS	
CL-TG5MDS	CL-TG5MDA	5"	2-3/8	1-1/2	3/4	.312	.500	1-1/4	5/16-18	1-1/8
CL-TG6MDS	CL-TG6MDA	6"	3	1-1/2	1-1/4	.312	.500	1-1/2	3/8-16	1-3/8
CL-TG6MDS1	CL-TG6MDA1			2						
CL-TG6MDS2	CL-TG6MDA2			3						
CL-TG8MDS	CL-TG8MDA	8"	4	2	1-1/2	.312	.500	1-3/4	3/8-16	2-1/4
CL-TG8MDS1	CL-TG8MDA1			3						
CL-TG10MDS	CL-TG10MDA	10"	4-1/2	2	2	.500	.750	2-1/8	1/2-13	2-1/4
CL-TG10MDS1	CL-TG10MDA1			3						
CL-TG10MDS2	CL-TG10MDA2			4						
CL-TG12MDS	CL-TG12MDA	12"	5-1/2	2	2	.500	.750	2-1/2	1/2-13	2-7/8
CL-TG12MDS1	CL-TG12MDA1			3						
—	CL-TG12MDA2			5						
CL-TG15MDS	—	15"	6-1/2	3	2-1/2	.500	.750	3	5/8-11	3-1/2
—	CL-TG15MDA1			3						
CL-TG15MDS5	—			5						

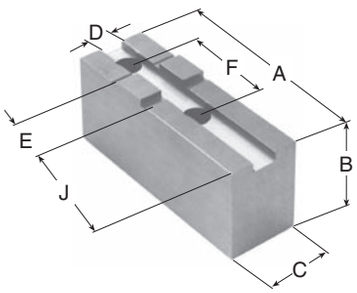

Square-Nose Soft Jaws

SQUARE-NOSE SOFT JAWS

PART NO. (SINGLE JAW) STEEL	PART NO. (SINGLE JAW) ALUMINUM	CHUCK SIZE	A LENGTH	B HEIGHT	C WIDTH	CRITICAL DIMENSIONS D	E	F	SCREW SIZE	J
—	—	4"	SEE POINTED SOFT JAWS							
—	—	5"								
—	CL-TG6MDA-SQ	6"	3	1-1/2	1	.312	.500	1-1/2	3/8-16	1-1/2
—	CL-TG8MDA-SQ	8"	4	3	1-1/2	.312	.500	1-3/4	3/8-16	—
CL-TG8MDS1-SQ	—			2						
—	CL-TG8MDA1-SQ			4						
CL-TG10MDS-SQ	CL-TG10MDA-SQ	10"	4-1/2	2	2	.500	.750	2-1/8	1/2-13	2-1/4
CL-TG10MDS1-SQ	CL-TG10MDA2-SQ		6	3						2-5/8
—	CL-TG12MDA	12"	5-1/2	2	2	.500	.750	2-1/2	1/2-13	—
—	CL-TG12MDA2-SQ			4						
—	CL-TG15MDA-SQ	15"	6-1/2	3	2	.500	.750	3	5/8-11	—
—	CL-TG15MDA1-SQ			4	2-1/2					
CL-A3014S	—		6-3/8	3	3					3-5/8

Carr Lane®
MANUFACTURING CO.
4200 Carr Lane Ct., P.O. Box 191970
St. Louis, Missouri 63119-7970 USA
Phone: 314-647-6200, FAX: 314-647-5736
Web Site: www.carrlane.com

(Rev. 4-08)

MEDIUM-DUTY TONGUE & GROOVE CHUCKS

(ATLAS, BERGMAN, BISON, BUCK, CUSHMAN, HURON, PRATT BERNERD, ROHM, SCA, S-P, WARNER & SWASEY, AND YUASA)

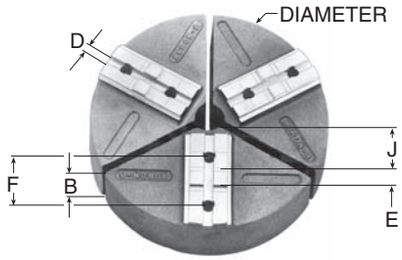

Pie-Shaped Soft Jaws

PIE-SHAPED SOFT JAWS

PART NO. (SINGLE JAW)			CHUCK	DIA-	B	CRITICAL DIMENSIONS				
ALUMINUM	CAST IRON	STEEL	SIZE	METER	HEIGHT	D	E	F	SCREW SIZE	J
—	—	—	4"	—	—	.250	.437	1-3/16	1/4-20	—
CL-TG5MDP	—	—	5"	6	2	.312	.500	1-1/4	5/16-18	1
CL-TG6MDP	CL-CI-TG6MDP	CL-ST-TG6MDP	6"	6	2	.312	.500	1-1/2	3/8-16	1-1/2
CL-TG6MDP1	CL-CI-TG6MDP1	CL-ST-TG6MDP1			4					
CL-TG8-6MDP	—	—		8	2					
CL-TG8-6MDP1	—	—			4					
CL-TG8MDP	CL-CI-TG8MDP	CL-ST-TG8MDP	8"	8	2	.312	.500	1-3/4	3/8-16	2-1/4
CL-TG8MDP1	CL-CI-TG8MDP1	CL-ST-TG8MDP1			4					
CL-TG8MDP6	—	—			6					
CL-TG10-8MDP	—	—		10	2					
CL-TG10-8MDP1	—	—			4					
CL-TG12-8MDP	—	—		12	2					
CL-TG12-8MDP1	—	—			4					
CL-TG10MDP	CL-CI-TG10MDP	CL-ST-TG10MDP	10"	10	2	.500	.750	2-1/8	1/2-13	2-3/4
CL-TG10MDP1	CL-CI-TG10MDP1	CL-ST-TG10MDP1			4					
CL-TG10MDP6	—	—			6					
CL-TG12-10MDP	—	—		12	2					
CL-TG12-10MDP1	—	—			4					
CL-TG15-10MDP	—	—		15	3					
CL-TG15-10MDP1	—	—			4					
CL-TG18-10MDP	—	—		18	3					
CL-TG18-10MDP1	—	—			4					
CL-TG12MDP	CL-CI-TG12MDP	CL-ST-TG12MDP	12"	12	2	.500	.750	2-1/2	1/2-13	3-1/2
CL-TG12MDP1	CL-CI-TG12MDP1	CL-ST-1TG2MDP1			4					
CL-TG15-12MDP	—	—		15	3					
CL-TG15-12MDP1	—	—			4					
CL-TG18-12MDP	—	—		18	3					
CL-TG18-12MDP1	—	—			4					
CL-TG21-12MDP2	—	—		21	2					
CL-TG21-12MDP	—	—			3					
CL-TG21-12MDP1	—	—			4					
CL-TG24-12MDP2	—	—		24	2					
CL-TG24-12MDP	—	—			3					
CL-TG24-12MDP1	—	—			4					

CONTINUED ON NEXT PAGE

Carr Lane®
MANUFACTURING CO.
4200 Carr Lane Ct., P.O. Box 191970
St. Louis, Missouri 63119-7970 USA
Phone: 314-647-6200, FAX: 314-647-5736
Web Site: www.carrlane.com

(Rev. 4-08)

MEDIUM-DUTY TONGUE & GROOVE CHUCKS

(ATLAS, BERGMAN, BISON, BUCK, CUSHMAN, HURON, PRATT BERNERD, ROHM, SCA, S-P, WARNER & SWASEY, AND YUASA)

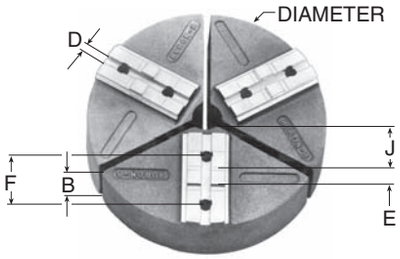

Pie-Shaped Soft Jaws

PIE-SHAPED SOFT JAWS (CONT)

PART NO. (SINGLE JAW) ALUMINUM	CAST IRON	STEEL	CHUCK SIZE	DIA-METER	B HEIGHT	CRITICAL DIMENSIONS D	E	F	SCREW SIZE	J
CL-TG12-15MDP	CL-CI-TG12-15MDP	—	15"	12	2	.500	.750	3	5/8-11	4-1/2
CL-TG15MDP2	CL-CI-TG15MDP2	—		15	2					
CL-TG15MDP	CL-CI-TG15MDP	—			3					
CL-TG15MDP1	CL-CI-TG15MDP1	—			4					
CL-TG18-15MDP	—	—		18	3					
CL-TG18-15MDP1	—	—			4					
CL-TG21-15MDP2	—	—		21	2					
CL-TG21-15MDP	—	—			3					
CL-TG21-15MDP1	—	—			4					
CL-TG24-15MDP2	—	—		24	2					
CL-TG24-15MDP	—	—			3					
CL-TG24-15MDP1	—	—			4					
CL-TG18HDP	—	—	18 & 21"	18	3	.500	.750	3	3/4-10	5-3/4
CL-TG18HDP1	—	—			4					
CL-TG18HDP8	—	—			8					
CL-TG21-18HDP2	—	—		21	2					
CL-TG21-18HDP	—	—			3					
CL-TG21-18HDP1	—	—			4					
CL-TG24-18HDP2	—	—		24	2					
CL-TG24-18HDP	—	—			3					
CL-TG24-18HDP1	—	—			4					
CL-TG28-18HDP	—	—		28	3					
CL-TG28-18HDP1	—	—			4					
CL-TG30-18HDP1	—	—		30	4					
CL-TG32-24-18HDP1	—	—		32	4					
CL-TG36-24-18HDP1	—	—		36	4					
CL-TG24HDP2	—	—	24"	24	2	.500	.750	3	3/4-10	8-3/4
CL-TG24HDP	—	—			3					
CL-TG24HDP1	—	—			4					
CL-TG28-24HDP	—	—		28	3					
CL-TG28-24HDP1	—	—			4					
CL-TG28-24HDP6	—	—			6					
CL-TG32-24-18HDP1	—	—		32	4					
CL-TG36-24-18HDP1	—	—		36	4					
CL-TG42-24-18HDP1	—	—		42	4					

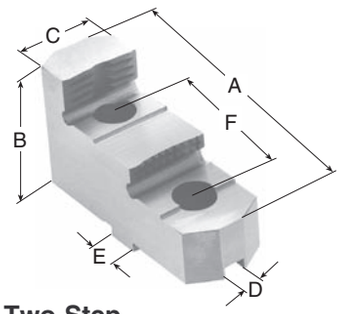

Two-Step Reversible Hard Jaws

TWO-STEP REVERSIBLE HARD JAWS (SET OF 3)

PART NO. (MATCHED SET OF 3 JAWS)	CHUCK SIZE	A LENGTH	B HEIGHT	C WIDTH	HEIGHT TO 1ST STEP	HEIGHT TO 2ND STEP	CRITICAL DIMENSIONS D	E	F	SCREW SIZE
—	4"	—	—	—	—	—	2.50	.437	1-3/16	1/4-20
—	5"	—	—	—	—	—	.312	.500	1-1/4	5/16-18
—	6"	—	—	—	—	—	.312	.500	1-1/2	3/8-16
CL-TG8MD-HJDS-SETOF3	8"	3.50	2.00	1.25	.96	1.40	.312	.500	1-3/4	3/8-16
CL-TG10MD-HJDS-SETOF3	10"	4.00	2.50	1.75	1.12	1.82	.500	.750	2-1/8	1/2-13
CL-TG12MD-HJDS-SETOF3	12"	4.50	2.50	1.75	1.12	1.82	.500	.750	2-1/2	1/2-13
CL-TG15MD-HJDS-SETOF3	15"	5.51	3.50	2.50	1.75	2.62	.500	.750	3	5/8-11
—	18, 21 & 24"	—	—	—	—	—	.500	.750	3	3/4-10

Carr Lane®
MANUFACTURING CO.
4200 Carr Lane Ct., P.O. Box 191970
St. Louis, Missouri 63119-7970 USA
Phone: 314-647-6200, FAX: 314-647-5736
Web Site: www.carrlane.com

(Rev. 6-08)

HEAVY-DUTY TONGUE & GROOVE CHUCKS

(ATLAS, BERGMAN, BUCK, CUSHMAN, LOGANSPORT, NOBEL, PRATT BERNERD, SCA, S-P, AND WARNER & SWASEY)

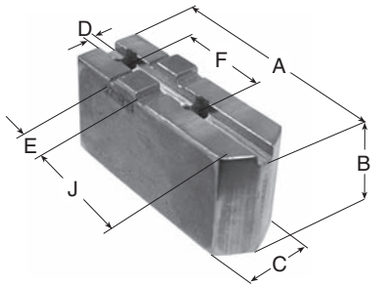

Pointed Soft Jaws

POINTED SOFT JAWS

PART NO. (SINGLE JAW)		CHUCK SIZE	A LENGTH	B HEIGHT	C WIDTH	CRITICAL DIMENSIONS				J
STEEL	ALUMINUM					D	E	F	SCREW SIZE	
CL-TG6HDS	CL-TG6HDA	6"	3	1-1/2	1-1/4	.312	.500	1-1/2	7/16-14	1-1/2
—	CL-TG6HDA1			2						
—	CL-TG6HDA2		3-1/4	3	1-1/2					1-13/16
CL-TG8HDS	CL-TG8HDA	8"	4	2	1-1/2	.312	.500	1-3/4	1/2-13	2-1/4
CL-TG8HDS1	CL-TG8HDA1			3						
CL-TG10HDS	CL-TG10HDA	10"	4-1/2	2	1-1/2	.500	.750	2-1/8	5/8-11	3-7/8
CL-TG10HDS1	CL-TG10HDA1			3						
CL-TG12HDS	CL-TG12HDA	12"	5-1/2	2	2	.500	.750	2-1/2	5/8-11	3-3/8
CL-TG12HDS1	CL-TG12HDA1			3						
CL-TG12HDS5	CL-TG12HDA5			5						
CL-TG15HDS	—	15"	6-1/2	3	2	.500	.750	3	3/4-10	3-1/4
CL-TG15HD5	—			5						
—	CL-TG15HDA1			4	2-1/2					3-3/4
—	—	18, 21 & 24"	6-3/8	4-3/4	3	.500	.750	3	3/4-10	3-3/4

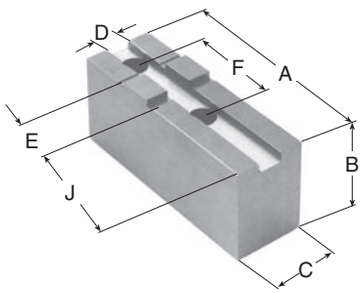

Square-Nose Soft Jaws

SQUARE-NOSE SOFT JAWS

PART NO. (SINGLE JAW)		CHUCK SIZE	A LENGTH	B HEIGHT	C WIDTH	CRITICAL DIMENSIONS				J
STEEL	ALUMINUM					D	E	F	SCREW SIZE	
CL-TG6HDS-SQ	CL-TG6HDA-SQ	6"	3	1-1/2	1-1/4	.312	.500	1-1/2	7/16-14	1-1/2
—	CL-TG8HDA-SQ	8"	4	4	1-1/2	.312	.500	1-3/4	1/2-13	2-1/4
—	CL-TG8HDA2-SQ									
CL-TG10HDS	CL-TG10HDA-SQ	10"	4-1/2	2	1-1/2	.500	.750	2-1/8	5/8-11	2-1/4
—	CL-TG10HDA2-SQ			4						
—	CL-TG12HDA-SQ	12"	5-1/2	2	2	.500	.750	2-1/2	5/8-11	2-1/8
CL-TG15HDS-SQ	CL-TG12HDA5-SQ			4						
—	CL-TG15HDA-SQ	15, 18, 21 & 24"	6-1/2	3	2-1/2	.500	.750	3	3/4-10	2-1/2
—	CL-TG15HDA1-SQ			4						3-1/4

Carr Lane®
MANUFACTURING CO.
4200 Carr Lane Ct., P.O. Box 191970
St. Louis, Missouri 63119-7970 USA
Phone: 314-647-6200, FAX: 314-647-5736
Web Site: www.carrlane.com

(Rev. 6-08)

HEAVY-DUTY TONGUE & GROOVE CHUCKS

(ATLAS, BERGMAN, BUCK, CUSHMAN, LOGANSPORT, NOBEL, PRATT BERNERD, SCA, S-P, AND WARNER & SWASEY)

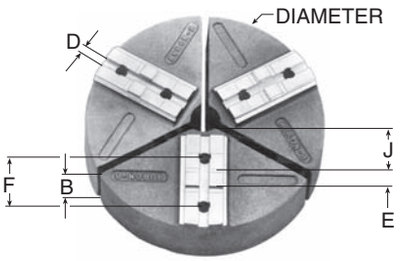

Pie-Shaped Soft Jaws

PIE-SHAPED SOFT JAWS

PART NO. (SINGLE JAW)			CHUCK SIZE	DIA-METER	B HEIGHT	CRITICAL DIMENSIONS				J
ALUMINUM	CAST IRON	STEEL				D	E	F	SCREW SIZE	
CL-TG6HDP	CL-CI-TG6HDP	CL-ST-TG6HDP	6"	6	2	.312	.500	1-1/2	7/16-14	1-1/2
CL-TG6HDP1	CL-CI-TG6HDP1	—			4					
CL-8-TG6HDP	—	—		8	2					
CL-8-TG6HDP1	—	—			4					
CL-TG8HDP	CL-CI-TG8HDP	CL-ST-TG8HDP	8"	8	2	.312	.500	1-3/4	1/2-13	2-1/4
CL-TG8HDP1	CL-CI-TG8HDP1	—			4					
CL-TG8HDP2	—	—			6					
CL-10-TG8HDP	—	—		10	2					
CL-10-TG8HDP1	—	—			4					
CL-12-TG8HDP	—	—		12	2					
CL-12-TG8HDP1	—	—			4					
CL-TG10HDP	CL-CI-TG10HDP	CL-ST-TG10HDP	10"	10	2	.500	.750	2-1/8	5/8-11	2-3/4
CL-TG10HDP1	CL-CI-TG10HDP1	CL-ST-TG10HDP1			4					
CL-TG10HDP6	—	—			6					
CL-12-TG10HDP	—	—		12	2					
CL-12-TG10HDP1	—	—			4					
CL-15-TG10HDP	—	—		15	3					
CL-15-TG10HDP1	—	—			4					
CL-18-TG10HDP	—	—		18	3					
CL-18-TG10HDP1	—	—			4					
CL-TG12HDP	CL-CI-TG12HDP	CL-ST-TG12HDP	12"	12	2	.500	.500	.500	.500	.500
CL-TG12HDP1	CL-CI-TG12HDP1	—			4					
CL-TG15-12HDP	—	—		15	3					
CL-TG15-12HDP1	—	—			4					
CL-TG18-12HDP	—	—		18	3					
CL-TG18-12HDP1	—	—			4					
CL-TG21-12HDP2	—			21	2					
CL-TG21-12HDP	—				3					
CL-TG21-12HDP1	—	—			4					
CL-TG24-12HDP2	—	—		24	2					
CL-TG24-12HDP	—	—			3					
CL-TG24-12HDP1	—	—			4					
CL-TG15HDP2	—	—	15"	15	2	.500	.750	3	3/4-10	.4-1/2
CL-TG15HDP	CL-CI-TG15HDP	—			3					
CL-TG15HDP1	CL-CI-TG15HDP1	CL-ST-TG15HDP1			4					
CL-TG18-15HDP	—	—		18	3					
CL-TG18-15HDP1	—	—			4					
CL-TG21-15HDP2	—	—		21	2					
CL-TG21-15HDP	—	—			3					
CL-TG21-15HDP1	—	—			4					
CL-TG24-15HDP2	—	—		24	2					
CL-TG24-15HDP	—	—			3					
CL-TG24-15HDP1	—	—			4					

CONTINUED ON NEXT PAGE

Carr Lane MANUFACTURING CO.
4200 Carr Lane Ct., P.O. Box 191970
St. Louis, Missouri 63119-7970 USA
Phone: 314-647-6200, FAX: 314-647-5736
Web Site: www.carrlane.com

(Rev. 6-08)

HEAVY-DUTY TONGUE & GROOVE CHUCKS

(ATLAS, BERGMAN, BUCK, CUSHMAN, LOGANSPORT, NOBEL, PRATT BERNERD, SCA, S-P, AND WARNER & SWASEY)

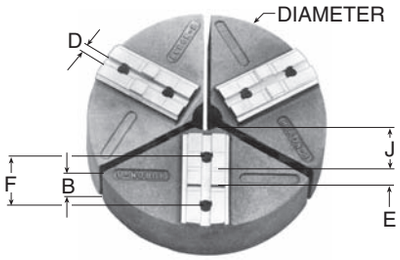

Pie-Shaped Soft Jaws

PIE-SHAPED SOFT JAWS (CONT)

PART NO. (SINGLE JAW)			CHUCK SIZE	DIA-METER	B HEIGHT	CRITICAL DIMENSIONS				
ALUMINUM	CAST IRON	STEEL				D	E	F	SCREW SIZE	J
CL-TG18HDP	—	—	18 & 21"	18	3	.500	.750	3	3/4-10	5-3/4
CL-TG18HDP1	—	—			4					
CL-TG18HDP8	—	—			8					
CL-TG21-18HDP2	—	—		21	2					
CL-TG21-18HDP	—	—			3					
CL-TG21-18HDP1	—	—			4					
CL-TG24-18HDP2	—	—		24	2					
CL-TG24-18HDP	—	—			3					
CL-TG24-18HDP1	—	—			4					
CL-TG28-18HDP	—	—		28	3					
CL-TG28-18HDP1	—	—			4					
CL-TG30-18HDP1	—	—		30	4					
CL-TG32-24-18HDP1	—	—		32	4					
CL-TG36-24-18HDP1	—	—		36	4					
CL-TG24HDP2	—	—	24"	24	2	.500	.750	3	3/4-10	8-3/4
CL-TG24HDP	—	—			3					
CL-TG24HDP1	—	—			4					
CL-TG28-24HDP	—	—		28	3					
CL-TG28-24HDP1	—	—			4					
CL-TG28-24HDP6	—	—			6					
CL-TG32-24-18HDP1	—	—		32	4					
CL-TG36-24-18HDP1	—	—		36	4					
CL-TG42-24-18HDP1	—	—		42	4					

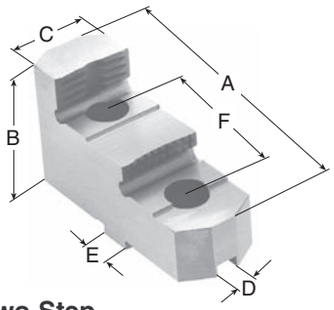

Two-Step Reversible Hard Jaws

TWO-STEP REVERSIBLE HARD JAWS (SET OF 3)

PART NO. (MATCHED SET OF 3 JAWS)	CHUCK SIZE	A LENGTH	B HEIGHT	C WIDTH	HEIGHT TO 1ST STEP	HEIGHT TO 2ND STEP	CRITICAL DIMENSIONS			
							D	E	F	SCREW SIZE
—	6"	—	—	—	—	—	.312	.500	1-1/2	7/16-14
—	8"	—	—	—	—	—	.312	.500	1-3/4	1/2-13
CL-TG10HD-HJDS-SETOF3	10"	4.00	2.50	1.75	1.12	1.82	.500	.750	2-1/8	5/8-11
CL-TG12HD-HJDS-SETOF3	12"	4.50	2.50	1.75	1.12	1.82	.500	.750	2-1/2	5/8-11
CL-TG15HD-HJDS-SETOF3	15-24"	5.50	3.50	2.50	1.75	2.62	.500	.750	3	3/4-10

Carr Lane®
MANUFACTURING CO.
4200 Carr Lane Ct., P.O. Box 191970
St. Louis, Missouri 63119-7970 USA
Phone: 314-647-6200, FAX: 314-647-5736
Web Site: www.carrlane.com

(Rev. 11-09)

METRIC
TONGUE & GROOVE CHUCKS

(SMW KNCS, FORKHARDT, ROHM, AND SCHUNK)

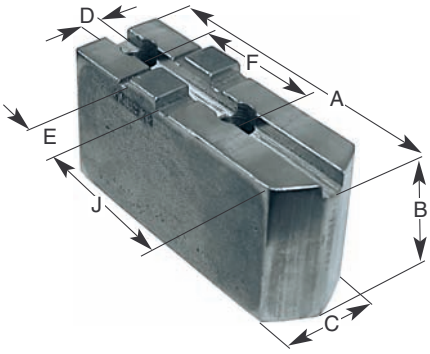

Standard Soft Jaws

STANDARD SOFT JAWS

PART NO. (SINGLE JAW) STEEL	ALUMINUM	CHUCK SIZE	A LENGTH	B HEIGHT	C WIDTH	CRITICAL DIMENSIONS D	E	F	SCREW SIZE	J
—	—	140,160, & 175mm	—	—	—	.315	.709	1.260	M8	—
CL-MTG8MDS	CL-M8MDA	200mm	4	2	1-1/2	.394	.787	1.575	M8	2
CL-MTG8MDS1	CL-M8MDA1			3						
CL-MTG10MDS	CL-M10MDA	250mm	4-1/2	2	1-1/2	.472	.787	1.575	M12	2
CL-MTG10MDS1	CL-M10MDA1			3						
CL-MTG12MDS	CL-M12MDA	315mm	5-1/2	2	2	.472	.787	1.575	M12	2.75
CL-MTG12MDS1	CL-M12MDA1			3						
CL-MTG15MDS	CL-M15MDA	400mm	5-1/2	3	2	.472	1.024	2.126	M12	2.75
CL-MTG15MDS1	CL-M15MDA1			4						
—	—	500& 630 mm	—	—	—	.709	1.181	2.362	M16	—

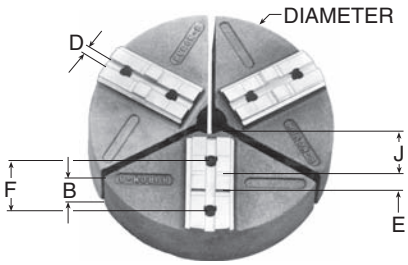

Pie-Shaped Soft Jaws

PIE-SHAPED SOFT JAWS

PART NO. (SINGLE JAW) ALUMINUM	CAST IRON	STEEL	CHUCK SIZE	DIA-METER	B HEIGHT	CRITICAL DIMENSIONS D	E	F	SCREW SIZE	J
CL-MTG6MDP	—	—	140, 160, & 175mm	6	2	.315	.709	1.260	M8	1.59
CL-MTG6MDP1	—	—			4					
CL-MTG8-M6MDP	—	—		8	2					
CL-MTG8-M6MDP1	—	—			4					
CL-MTG8MDP	—	—	200mm	8	2	.394	.787	1.575	M8	2.21
CL-MTG8MDP1	—	—			4					
CL-MTG8-10MDP1	—	—	250mm	8	4	.472	.787	1.575	M12	2.34
CL-MTG10MDP	—	—		10	2					3.21
CL-MTG10MDP1	—	—			4					
CL-MTG12MDP	—	—	315mm	12	2	.472	.787	1.575	M12	4.21
CL-MTG12MDP1	—	—			4					
CL-AMTG8MDP	—	—	315 & 400mm	8	2	.472	1.024	2.126	M12	1.80
CL-AMTG12MDP	—	—		12	2					3.30
CL-AMTG15MDP	—	—		15	3					3.65
CL-MTG15MDP	—	—	400mm	15	3	.472	1.024	2.126	M12	4.98
CL-MTG15MDP1	—	—			4					
CL-MTG18-15MDP	—	—		18	3					
CL-MTG18-15MDP1	—	—			4					
CL-MTG18-15MDP6	—	—			6					
CL-AMTG22MDP2.5	—	—		22	2-1/2					3.74
CL-MTG18-24MDP	—	—	500 & 630mm	18	3	.709	1.181	2.362	M16	3.66
CL-MTG18-24MDP1	—	—			4					

Carr Lane®
MANUFACTURING CO.
4200 Carr Lane Ct., P.O. Box 191970
St. Louis, Missouri 63119-7970 USA
Phone: 314-647-6200, FAX: 314-647-5736
Web Site: www.carrlane.com

(Rev. 11-09)

METRIC
TONGUE & GROOVE CHUCKS

(SMW KNCS, FORKHARDT, ROHM, AND SCHUNK)

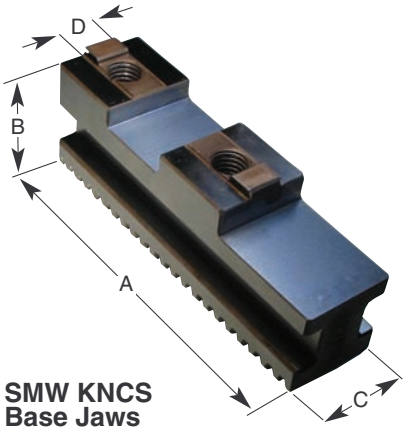

SMW KNCS Base Jaws

GBK Base Jaws are intermediate jaws that allow using soft top jaws on SMW KNCS power chucks. Teeth are induction hardened and precision ground. Base Jaws are sold in matched sets of three. High-carbon steel.

SMW KNCS BASE JAWS (SET OF 3)

PART NO. (MATCHED SET OF 3 JAWS)	CHUCK SIZE	A	B	C	D
CL-GBK-140-SETOF3	140mm	2.20	1.181	.79	.315
CL-GBK-160-SETOF3	160mm	2.56			
CL-GBK-175-SETOF3	175mm	2.56			
CL-GBK-200-SETOF3	200mm	3.35	1.260	87	.394
CL-GBK-250-SETOF3	250mm	4.09	1.575	1.02	.472
CL-GBK-315-SETOF3	315mm	4.53	1.811	1.26	
CL-GBK-400-SETOF3	400mm	4.92	1.811	1.26	.472
CL-GBK-500-SETOF3	500mm	6.30	2.402	1.77	.709
CL-GBK-630-SETOF3	630mm	7.87			

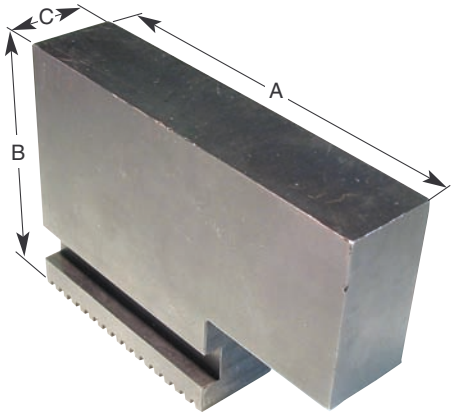

SMW KNCS Half-Soft Monoblock Jaws

UVB Monoblock Jaws mount directly on SMW KNCS power chucks without an intermediate base jaw. Teeth are induction hardened and precision ground, with the top left soft. These jaws can be flame hardened after machining, or left soft. High-carbon steel.

SMW KNCS HALF-SOFT MONOBLOCK JAWS

PART NO. (SINGLE JAW)	CHUCK SIZE	A	B	C
CL-UVB-140	140mm	2.28	2.36	.79
CL-UVB-160	160mm	2.71	2.36	.79
CL-UVB-175	175mm	2.71	2.36	.79
CL-UVB-200	200mm	3.31	2.75	.87
CL-UVB-250	250mm	4.21	3.54	1.02
CL-UVB-315	315mm	4.65	3.94	1.26
CL-UVB-400	400mm	5.71	3.94	1.26
CL-UVB-500	500mm	6.89	5.28	1.77
CL-UVB-630	630mm	9.06	5.28	1.77

Carr Lane®
MANUFACTURING CO.
4200 Carr Lane Ct., P.O. Box 191970
St. Louis, Missouri 63119-7970 USA
Phone: 314-647-6200, FAX: 314-647-5736
Web Site: www.carrlane.com

(Rev. 10-06)

JAWS FOR NORTHFIELD AND MICROCENTRIC HIGH-PRECISION CHUCKS

NEW!

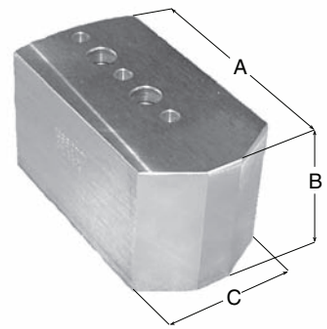

Pointed Soft Jaws

These jaws have precision locating holes to fit on round locating pins, for mounting on Northfield and MicroCentric chucks. Pointed Soft Jaws are ideal for small-diameter parts, as well as large-diameter parts, because the point allows closing nearer to the center of the chuck. Standard point is a 120º included angle (with a slight flat at the tip). Aluminum material is standard (2024) with steel available as an option (1018). Steel jaws can be case hardened after machining, or left soft.

POINTED SOFT JAWS — NORTHFIELD (SET OF 3)

PART NO. (MATCHED SET OF 3 JAWS) STEEL	ALUMINUM	CHUCK SIZE	A LENGTH	B HEIGHT	C WIDTH	EXTERNAL CHUCKING RANGE	INTERNAL CHUCKING RANGE
CL-ST-1-4.75-SETOF3	CL-AL-1-4.75-SETOF3	4"	1.895	3/4	3/4	.130-3.750	.250-3.750
CL-ST-1-4-1.5-SETOF3	CL-AL-1-4-1.5-SETOF3			1-1/2			
CL-ST-1-4-3-SETOF3	CL-AL-1-4-3-SETOF3			3			
CL-ST-1-6-1-SETOF3	CL-AL-1-6-1-SETOF3	6"	2.895	1	1	.130-5.750	.250-5.750
CL-ST-1-6-1.5-SETOF3	CL-AL-1-6-1.5-SETOF3			1-1/2			
CL-ST-1-6-2-SETOF3	CL-AL-1-6-2-SETOF3			2			
CL-ST-1-6-3-SETOF3	CL-AL-1-6-3-SETOF3			3			
CL-ST-1-6-4-SETOF3	CL-AL-1-6-4-SETOF3			4			
CL-ST-1-8-2-SETOF3	CL-AL-1-8-2-SETOF3	8"	3.687	2	2	.750-7.750	1.000-7.750
CL-ST-1-8-3-SETOF3	CL-AL-1-8-3-SETOF3			3			
CL-ST-1-8-4-SETOF3	CL-AL-1-8-4-SETOF3			4			
CL-ST-1-10-2-SETOF3	CL-AL-1-10-2-SETOF3	10"	4.687	2	2	.750-9.750	1.000-9.750
CL-ST-1-10-3-SETOF3	CL-AL-1-10-3-SETOF3			3			
CL-ST-1-10-4-SETOF3	CL-AL-1-10-4-SETOF3			4			
CL-ST-1-12-3-SETOF3	CL-AL-1-12-3-SETOF3	12"	5.687	3	2	.750-11.750	1.000-11.750

POINTED SOFT JAWS — MICROCENTRIC (SET OF 3)

PART NO. (MATCHED SET OF 3 JAWS) STEEL	ALUMINUM	CHUCK SIZE	A LENGTH	B HEIGHT	C WIDTH	EXTERNAL CHUCKING RANGE	INTERNAL CHUCKING RANGE
CL-MC-4150S-SETOF3	CL-MC-4150A-SETOF3	4"	1.930	1-1/2	3/4	.130-3.750	.250-3.750
CL-MC-4300S-SETOF3	CL-MC-4300A-SETOF3			3			
CL-MC-6200S-SETOF3	CL-MC-6200A-SETOF3	6"	2.955	2	1	.130-5.750	.250-5.750
CL-MC-6300S-SETOF3	CL-MC-6300A-SETOF3			3			
CL-MC-6400S-SETOF3	CL-MC-6400A-SETOF3			4			
CL-MC-8200S-SETOF3	CL-MC-8200A-SETOF3	8"	3.750	2	1-1/2	.750-7.750	1.000-7.750
CL-MC-8300S-SETOF3	CL-MC-8300A-SETOF3			3			
CL-MC-8400S-SETOF3	CL-MC-8400A-SETOF3			4			
CL-MC-10200S-SETOF3	CL-MC-10200A-SETOF3	10"	4.750	2	1-1/2	.750-9.750	1.000-9.750
CL-MC-10300S-SETOF3	CL-MC-10300A-SETOF3			3			
CL-MC-10400S-SETOF3	CL-MC-10400A-SETOF3			4			

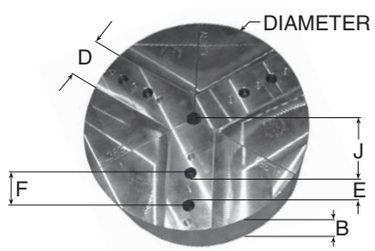

Pie-Shaped Soft Jaws

Full-grip jaws provide increased surface contact on large diameter or thinwall parts, to prevent distortion and marring. Also ideal for fixturing non-cylindrical parts. Aluminum material is standard (2024 aluminum on sizes up to 8" diameter. 6061 aluminum on sizes 10" diameter and above.), with steel available as an option. Steel jaws can be case hardened after machining, or left soft.

PIE-SHAPED SOFT JAWS — NORTHFIELD (SET OF 3)

PART NO. (MATCHED SET OF 3 JAWS) STEEL	ALUMINUM	CHUCK SIZE	DIAMETER	B HEIGHT	EXTERNAL CHUCKING RANGE	INTERNAL CHUCKING RANGE
CL-ST-3-4-2-SETOF3	CL-AL-3-4-2-SETOF3	4"	3.92	2	.750-3.750	.750-3.750
CL-ST-3-4-3-SETOF3	CL-AL-3-4-3-SETOF3			3		
CL-ST-3-6-2-SETOF3	CL-AL-3-6-2-SETOF3	6"	5.92	2	.750-5.750	.750-5.750
CL-ST-3-6-3-SETOF3	CL-AL-3-6-3-SETOF3			3		
CL-ST-3-6-4-SETOF3	CL-AL-3-6-4-SETOF3			4		
CL-ST-3-7-2-SETOF3	CL-AL-3-7-2-SETOF3	6 & 8"	7	2	.750-6.750	1.000-6.750
CL-ST-3-7-3-SETOF3	CL-AL-3-7-3-SETOF3			3		
CL-ST-3-8-2-SETOF3	CL-AL-3-8-2-SETOF3	8"	8	2	.750-7.750	1.000-7.750
CL-ST-3-8-3-SETOF3	CL-AL-3-8-3-SETOF3			3		
CL-ST-3-8-4-SETOF3	CL-AL-3-8-4-SETOF3			4		
CL-ST-3-10-2-SETOF3	CL-AL-3-10-2-SETOF3	10"	10	2	.750-9.750	1.000-9.750
CL-ST-3-10-3-SETOF3	CL-AL-3-10-3-SETOF3			3		
CL-ST-3-10-4-SETOF3	CL-AL-3-10-4-SETOF3			4		
CL-ST-3-12-10-3-SETOF3	CL-AL-3-12-10-3-SETOF3		12	3	.750-11.750	1.000-11.750
CL-ST-3-14-10-2-SETOF3	CL-AL-3-14-10-2-SETOF3		14	2	.750-13.750	1.000-13.750
CL-ST-3-14-10-4-SETOF3	CL-AL-3-14-10-4-SETOF3			4		
CL-ST-3-16-10-4-SETOF3	CL-AL-3-16-10-4-SETOF3		16	4	.750-15.750	1.000-15.750
CL-ST-3-12-2-SETOF3	CL-AL-3-12-2-SETOF3	12"	12	2	.750-11.750	1.000-11.750
CL-ST-3-12-3-SETOF3	CL-AL-3-12-3-SETOF3			3		
CL-ST-3-12-4-SETOF3	CL-AL-3-12-4-SETOF3			4		
CL-ST-3-12-6-SETOF3	CL-AL-3-12-6-SETOF3			6		
CL-ST-3-18-12-3-SETOF3	CL-AL-3-18-12-3-SETOF3		18	3	.750-17.750	1.000-17.750

MANUFACTURING CO.
4200 Carr Lane Ct., P.O. Box 191970
St. Louis, Missouri 63119-7970 USA
Phone: 314-647-6200, FAX: 314-647-5736
Web Site: www.carrlane.com

JAWS FOR NORTHFIELD AND MICROCENTRIC HIGH-PRECISION CHUCKS

PIE-SHAPED SOFT JAWS — MICROCENTRIC (SET OF 3)

PART NO. (MATCHED SET OF 3 JAWS) STEEL	ALUMINUM	CHUCK SIZE	DIA-METER	B HEIGHT	EXTERNAL CHUCKING RANGE	INTERNAL CHUCKING RANGE
CL-ST-MC-3-4-2-SETOF3	CL-MC-3-4-2-SETOF3	4"	3.92	2	.750-3.750	.750-3.750
CL-ST-MC-3-4-3-SETOF3	CL-MC-3-4-3-SETOF3			3		
CL-ST-MC-3-6-2-SETOF3	CL-MC-3-6-2-SETOF3	6"	5.92	2	.750-5.750	.750-5.750
CL-ST-MC-3-6-3-SETOF3	CL-MC-3-6-3-SETOF3			3		
CL-ST-MC-3-6-4-SETOF3	CL-MC-3-6-4-SETOF3			4		
CL-ST-MC-3-8-2-SETOF3	CL-MC-3-8-2-SETOF3	8"	8	2	.750-7.750	1.000-7.750
CL-ST-MC-3-8-3-SETOF3	CL-MC-3-8-3-SETOF3			3		
CL-ST-MC-3-8-4-SETOF3	CL-MC-3-8-4-SETOF3			4		
CL-ST-MC-3-10-2-SETOF3	CL-MC-3-10-2-SETOF3	10"	10	2	.750-9.750	1.000-9.750
CL-ST-MC-3-10-3-SETOF3	CL-MC-3-10-3-SETOF3			3		
CL-ST-MC-3-10-4-SETOF3	CL-MC-3-10-4-SETOF3			4		

POT CHUCKS

A713 TENZALOY ALUMINUM ALLOY, AGED TO T-6 CONDITION

NEW!

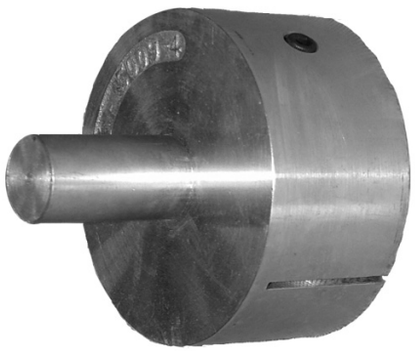

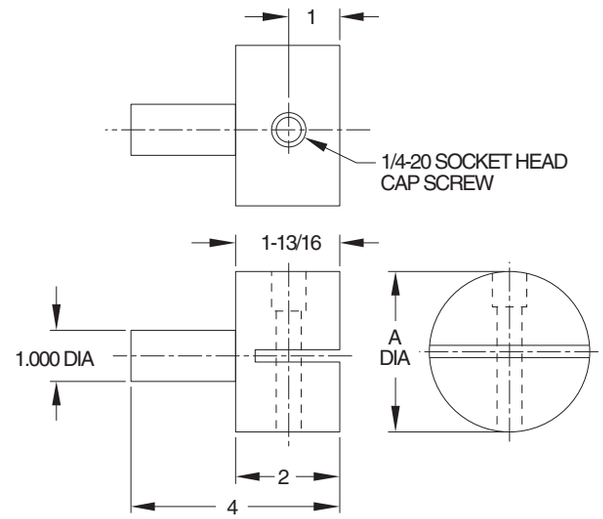

Machinable blank mini-chuck with a 1"-diameter shaft for mounting in a collet or chuck. This quick and handy tool is ideal for holding small cylindrical and non-cylindrical parts. After machining the Pot Chuck to fit the workpiece, clamp by tightening the socket-head cap screw. Available in four chuck sizes, all with a 1" diameter shaft.

PART NO.	A DIA	WEIGHT (LBS)
CL-SCP5009-3	3	1.8
CL-SCP5009-4	4	3
CL-SCP5009-5	5	4
CL-SCP5009-6	6	6

Carr Lane®
MANUFACTURING CO.
4200 Carr Lane Ct., P.O. Box 191970
St. Louis, Missouri 63119-7970 USA
Phone: 314-647-6200, FAX: 314-647-5736
Web Site: www.carrlane.com

(Rev. 4-07)

MASTER PLATES

NEW!

MASTER PLATES: A713 TENZALOY ALUMINUM ALLOY, AGED TO T-6 CONDITION
JAW SEGMENTS: 319 ALUMINUM ALLOY

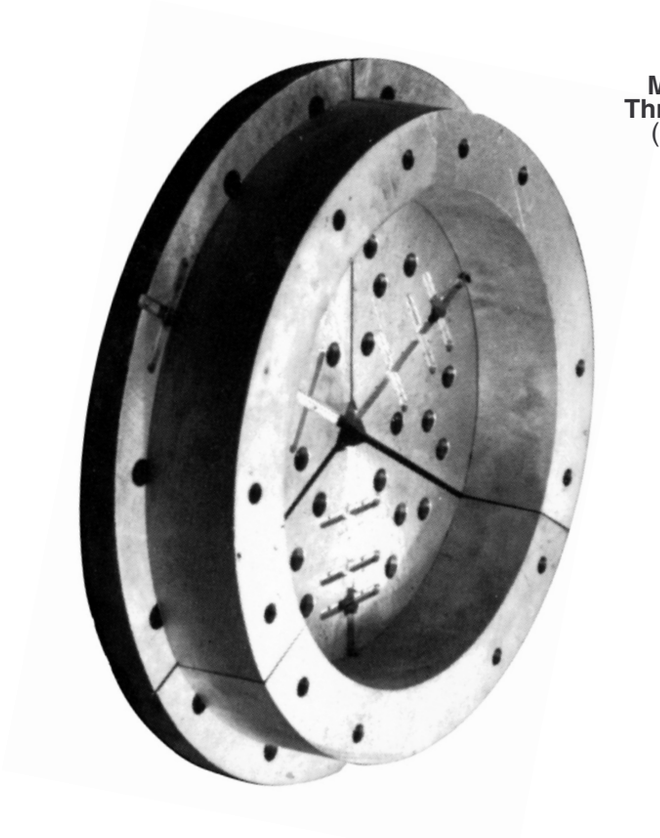

Master Plate with Three Jaw Segments
(order separately)

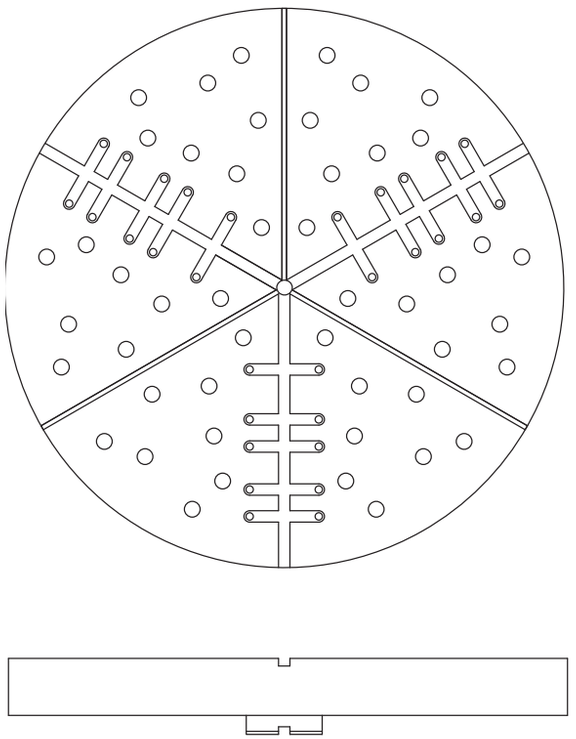

This universal face-plate fixture is ideal for machining large thin-walled parts. Master Plates are made in 3 sections that mount on a chuck like top jaws and accept a wide variety of machinable jaw segments (also available in 4 sections for 4-jaw chucks). The mounting pattern is machined to your chuck specifications – please specify make and size of chuck when ordering (for vertical turret lathes, a drawing of the chuck or worktable showing sizes and mounting pattern is required). Patent number 3,747,945. Master Plates are available for chuck sizes from 10" to 60" diameter. Jaw Segments are available in a wide range of ODs and IDs, in standard height and extra high.

MASTER PLATES FOR 3-JAW CHUCKS (SET OF 3 PLATE SECTIONS)

PART NO. (SET OF 3 PLATE SECTIONS)	PLATE DIAMETER	CHUCK SIZES	SEGMENT DIAMETER RANGE	WEIGHT PER SECTION (LBS)
CL-18MP-SETOF3	18	10"+	1" ID up to 19" OD	17
CL-21MP-SETOF3	21	12"+	1" ID up to 22" OD	23
CL-24MP-SETOF3	24	12"+	1" ID up to 26" OD	30
CL-30MP-SETOF3	30	15"+	1" ID up to 32" OD	47
CL-36MP-SETOF3	36	18"+	1" ID up to 36" OD	67
CL-48MP-SETOF3	48	24"+	1" ID up to 50" OD	117
CL-60MP-SETOF3	60	30"+	1" ID up to 60" OD	183

Carr Lane®
MANUFACTURING CO.
4200 Carr Lane Ct., P.O. Box 191970
St. Louis, Missouri 63119-7970 USA
Phone: 314-647-6200, FAX: 314-647-5736
Web Site: www.carrlane.com

MASTER PLATES

JAW SEGMENTS FOR MASTER PLATES (3-JAW CHUCKS)

PART NO. (SINGLE JAW SEGMENT)	PLATE DIAMETER	JAW O.D.	JAW I.D.	JAW HEIGHT
CL-10SP2	18+	10	2	2
CL-10SP4				4
CL-10SP6				6
CL-10SP8				8
CL-11-1SP2.5		11	1	2-1/2
CL-12-1SP2.5		12	1	2-1/2
CL-13-1SP2.5		13	1	2-1/2
CL-14-4SP3		14	4	3
CL-14-5SP3			5	3
CL-15-7SP2		15	7	2
CL-15-7SP4				4
CL-15-7SP6				6
CL-15-9SP2			9	2
CL-15-9SP4				4
CL-15-9SP6				6
CL-16-1SP4		16	1	4
CL-16-7SP3			7	3
CL-18-12SP2		18	12	2
CL-18-12SP4				4
CL-18-12SP6				6
CL-18-12SP8				8
CL-19-9SP3		19	9	3
CL-21-12SP2	21+	21	12	2
CL-22-10SP2		22	10	2
CL-22-10SP3				3
CL-22-16SP2			16	2
CL-22-16SP4				4
CL-24-15SP2	24+	24	15	2
CL-24-15SP4				4
CL-24-18SP2			18	2
CL-24-18SP4				4
CL-24-18SP6				6
CL-26-18SP2		26	18	2
CL-26-18SP4				4
CL-30-24SP2	30+	30	24	2
CL-30-24SP4				4
CL-32-26SP4		32	26	4
CL-36-28SP4	36+	36	28	4
CL-36-28SP6				6
CL-36-30SP2			30	2
CL-36-30SP4				4
CL-38-30SP4	48+	38	30	4
CL-40-30SP2		40	30	2
CL-40-30SP4				4
CL-40-32SP4			32	4
CL-42-36SP2		42	36	2
CL-42-36SP4				4
CL-44-34SP2		44	34	2
CL-44-34SP2				4
CL-48-38SP2		48	38	2
CL-48-42SP2			42	2
CL-48-42SP4				4
CL-50-40SP2		50	40	2
CL-50-40SP4				4
CL-54-40SP2	60+	54	40	2
CL-60-50SP2		60	50	2

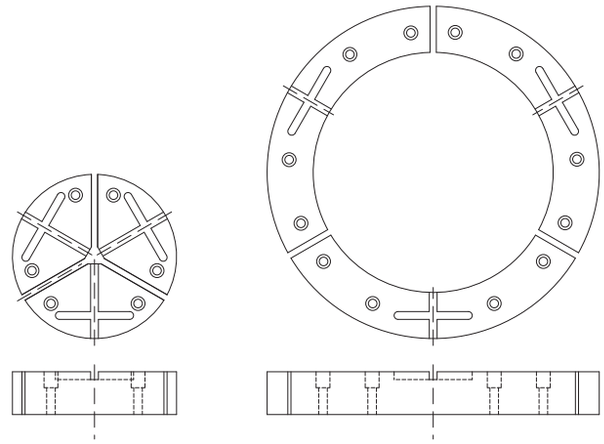

Jaw segments are available for a wide range of diameters from small to large.

CarrLane® MANUFACTURING CO.
4200 Carr Lane Ct., P.O. Box 191970
St. Louis, Missouri 63119-7970 USA
Phone: 314-647-6200, FAX: 314-647-5736
Web Site: www.carrlane.com

(Rev. 7-05)

SPECIAL CHUCK JAWS

For special top jaws not shown in this catalog, please contact factory. If possible, refer to one of the figures on these two pages. Fill in the desired dimensions on the table below and/or on the drawing. We will use standard dimensions and tolerances unless otherwise requested.

Quantity required: _____

Figure (circle one): A B C D E F G H J K

Shape: ❑ Standard ❑ Pointed ***

Material: ❑ Standard steel ❑ _____

A	B**	C**	CRITICAL DIMENSIONS				G	TAP SIZE	J	N	T
			D*	E*	F*	SCREW SIZE					

* Standard tolerances will be supplied unless otherwise requested.
** Standard dimensions will be supplied unless otherwise requested.
*** Pointed jaws will have a 120° included angle unless otherwise requested.

FIGURE A

AMERICAN STANDARD TONGUE & GROOVE

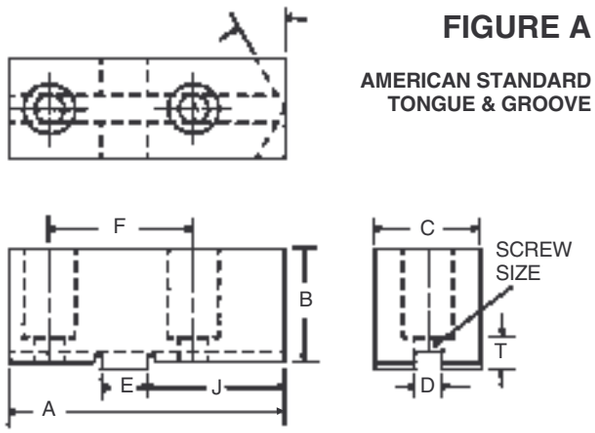

FIGURE B

SQUARE SERRATED

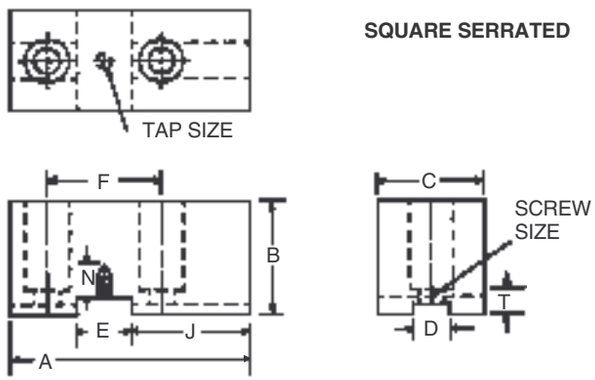

FIGURE C

ACME SERRATED

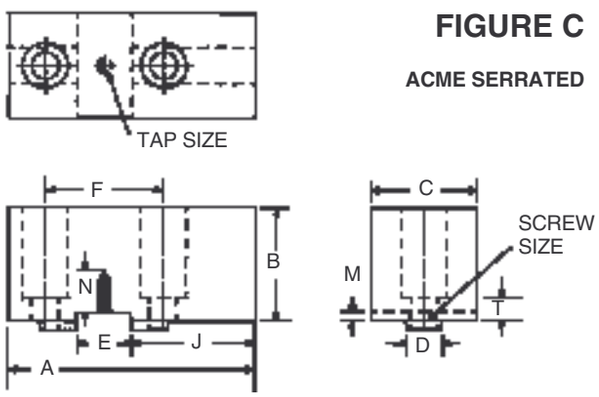

FIGURE D

SERRATIONS ON JAW ARE 1/16 PITCH x 90°

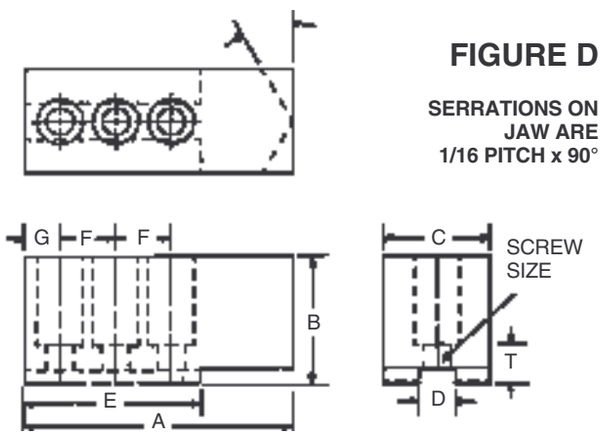

CarrLane®
MANUFACTURING CO.
4200 Carr Lane Ct., P.O. Box 191970
St. Louis, Missouri 63119-7970 USA
Phone: 314-647-6200, FAX: 314-647-5736
Web Site: www.carrlane.com

SPECIAL CHUCK JAWS

FIGURE E

SERRATIONS
3mm x 60° (.1181)

E - LENGTH OF SERRATION

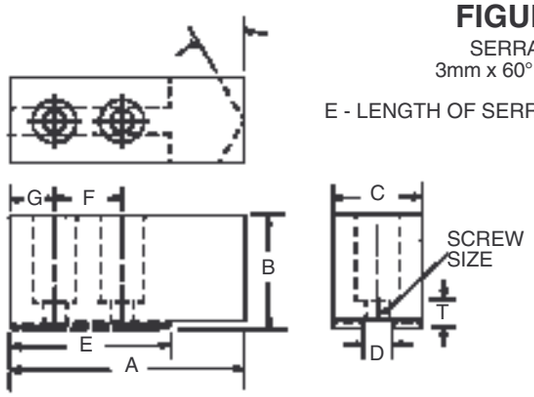

FIGURE F

SERRATIONS
1.5mm x 60° (.0591)

E - LENGTH OF SERRATION

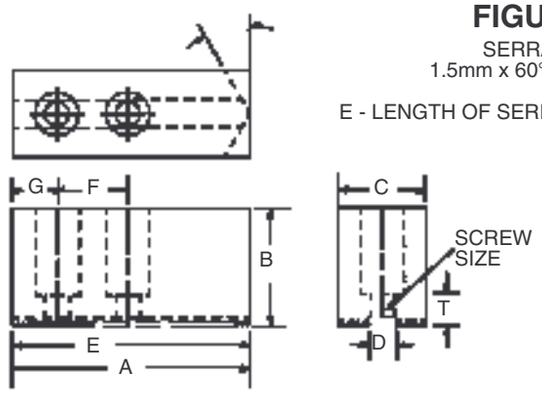

FIGURE G

SERRATED HARD JAW

E - LENGTH OF SERRATION

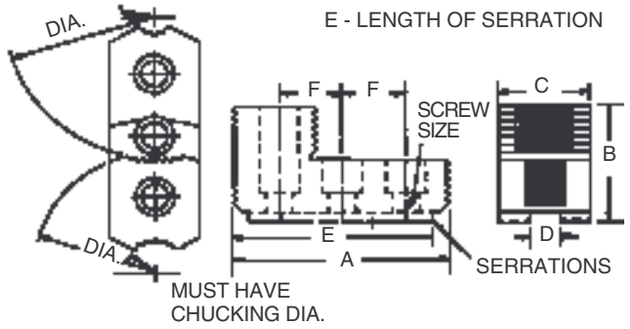

FIGURE H

ACME SERRATED HARD JAW

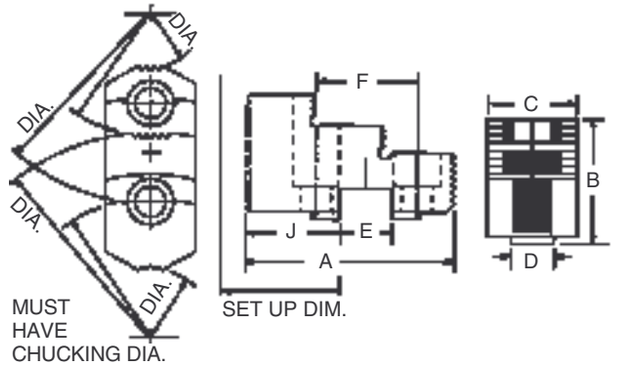

FIGURE J

AMERICAN STANDARD
TONGUE & GROOVE
HARD JAW

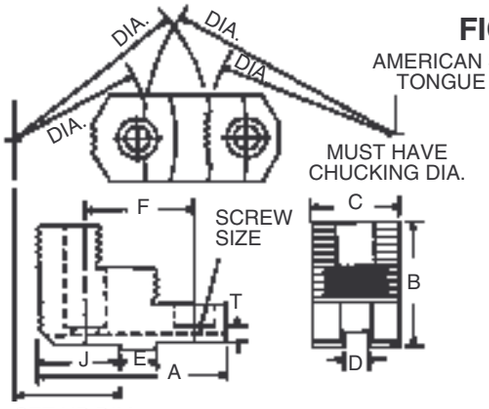

FIGURE K

SQUARE
SERRATED
HARD
JAW

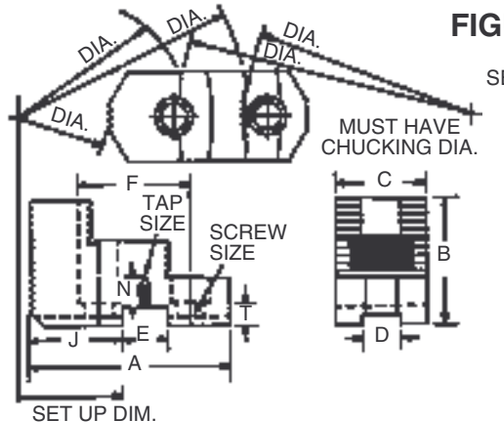

Carr Lane®
MANUFACTURING CO.
4200 Carr Lane Ct., P.O. Box 191970
St. Louis, Missouri 63119-7970 USA
Phone: 314-647-6200, FAX: 314-647-5736
Web Site: www.carrlane.com

Visit us on the web at www.carrlane.com

Carr Lane's Complete Line

of tooling components for jigs and fixtures

- Alignment Pins
- Spring-Loaded Devices
- Hoist Rings
- Screw Clamps
- Knobs and Handles
- Clamp Straps
- Supports, Rests, Feet
- Toggle Clamps
- Chuck Jaws
- Nuts, Bolts, Washers
- Locators
- Modular Fixturing
- Machine Vises
- SWIFTSURE® Power Workholding
- Drill Jig Bushings
- Threaded Inserts
- Plug Gages

Whatever your tooling component needs are, we deliver on time... at your doorstep...to your specifications.

NEW! Toggle Clamps With Safety Locks

Carr Lane offers standard components to help you increase quality and productivity.

Visit our web site, carrlane.com

ISO 9001-2000 CERTIFIED

FM 35617

Carr Lane® MANUFACTURING CO.
4200 Carr Lane Ct., P.O. Box 191970
St. Louis, Missouri 63119-7970 USA
Phone: 314-647-6200, FAX: 314-647-5736
Web Site: www.carrlane.com

When you need it!
Where you need it!
How you need it!

MODULAR FIXTURING

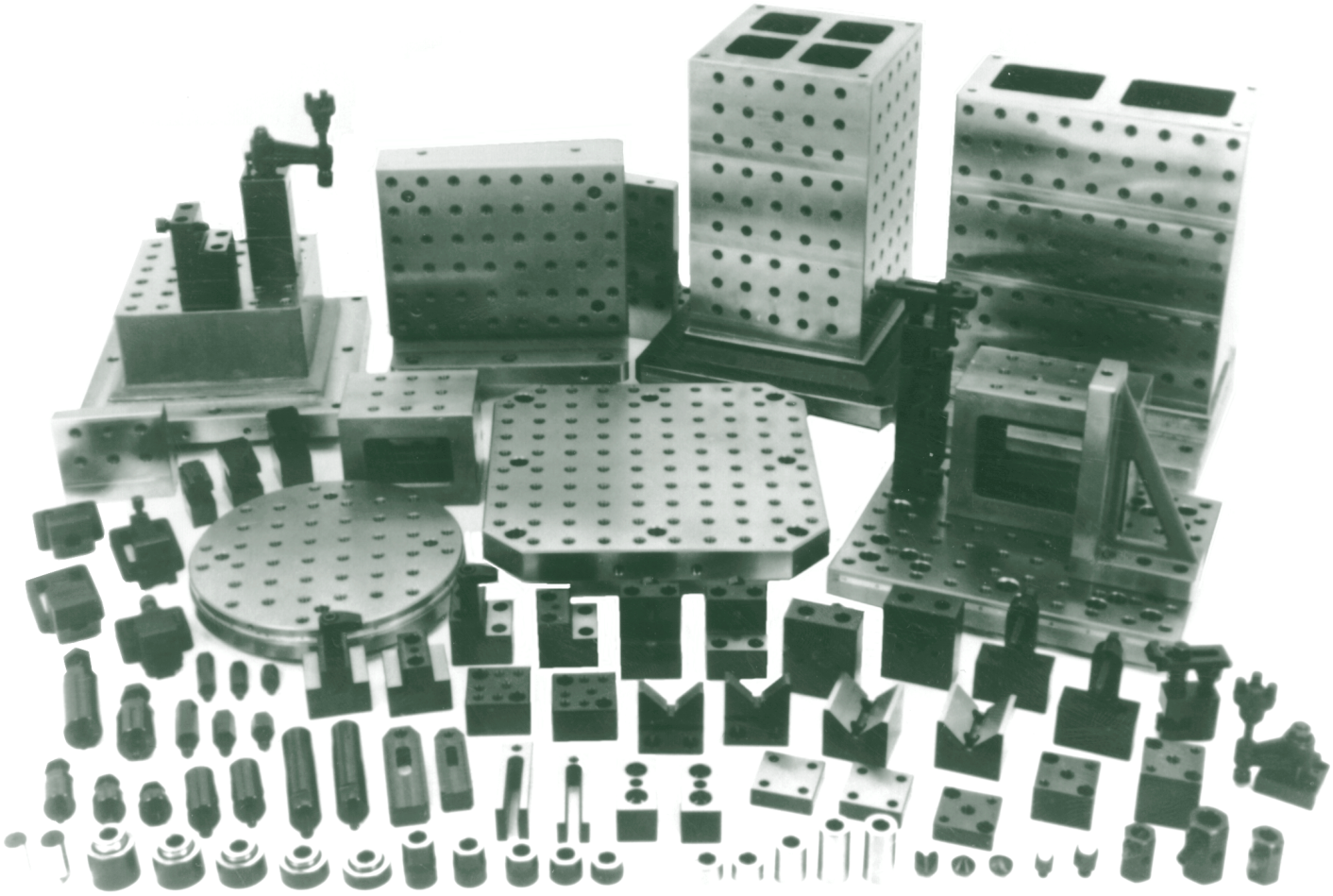

Authorized Distributor:

MANUFACTURING CO.
4200 Carr Lane Ct., P.O. Box 191970
St. Louis, Missouri 63119-7970 USA
Phone: 314-647-6200, FAX: 314-647-5736
Web Site: www.carrlane.com

Printed in U.S.A. © COPYRIGHT 1997 CARR LANE MANUFACTURING CO. 8304-897

ALPHA-NUMERICAL INDEX

BC	Block Push Clamps	See website
CS	Clamp Straps	50-51, 53
DLT	Diamond Locating Pins	43
EC	Edge Clamps	See website
EX	Extending Clamps	See website
F	Distribution Manifolds	See website
FAC	Forged Adjustable Clamps	58
FH	Fixture Hose	64
HTC	Horizontal Toggle Clamps	63
KSA	Knob Shoe Assemblies	62
KSJ	Knurled Screw Jacks	46
PC	Push/Pull Toggle Clamps	63
PD	Pallet Decouplers	See website
PPC	Push/Pull Toggle Clamps	63
RLT	Round Locating Pins	43
SA	Standard-Adjustable Spindles	55
SAC	Serrated Adjustable Clamps	60-61
SC	Swing Clamps	See website
SCH	Swing Clamps	See website
SHCS	Socket-Head Cap Screws	32
SHS	Swivel Head Screws	62
SPC	Push/Pull Toggle Clamps	63
SSXX	Toolroom Starter Sets	8-13
SSC	Swivel Screw Clamps	62
TSB	Adjustable-Torque Thumb Screws	62
TSJ	Torque Screw Jacks	47
V	Sequence Valves	See website
WS	Work Supports	See website
0001	Protection Plugs	33
0101	Precision Bushings	5
010X	Rectangular Tooling Plates, Regular	14
015X	Rectangular Tooling Plates, Extra Long	15
020X	Vertical Tooling Plates	25
030X	Round Tooling Plates	16
040X	Angle Plates, Tall	27
045X	Angle Tooling Plates	20
050X	Angle Plates, Short	27
060X	Two-Sided Tooling Blocks	21
065X	Window Tooling Blocks	24
070X	Four-Sided Tooling Blocks	22
080X	Platform Tooling Plates	19
080X	Square Pallet Tooling Plates	17
085X	Rectangular Pallet Tooling Plates	18
090X	Riser Plates	26
100X	Pivoting Edge Clamps	59
110X	Downthrust Backstops	59
125X	Screw-Clamp Adaptors	62
141X	Support Riser Blocks	35
146X	Multipurpose Riser Blocks	35
15XX	Swing Clamp Assemblies	56
160X	Clamp Riser Blocks	34
165X	Sideways Mounting Blocks	34
180X	Adjustable Swing Stops	48
190X	High-Rise Clamps, Adaptor Bases	53
200X	High-Rise Clamps, Tapped-Nose	52
205X	High-Rise Clamps, Standard-Nose	52
210X	High-Rise Clamps, Gooseneck	52
220X	High-Rise Clamps, Tapped-Nose	54
230X	Narrow Riser Blocks	54
235X	Spacer Blocks	54
240X	Support Holders	54
250X	Swivel Contact Bolts	55
260X	Contact-Bolt Extensions	55
290X	Adjustable Stops	48
31XX	Support Cylinders	40
315X	Relieved Support Cylinders	41
320X	Shoulder Support Cylinders	41
330X	Extension Supports	36
340X	Heavy-Duty Screw Jacks	46
350X	Screw-Jack Tips	46
360X	Halfway Extension Supports	37
370X	Edge Supports, Single	39
380X	Edge Supports, Double	39
390X	Spring-Stop-Button Adaptors	49
400X	Locating Gages	33
410X	Locating-Pin Adaptors, Fixed	42
420X	Locating-Pin Adaptors, Adjustable	42
430X	Locating Bushings	32
430X	Locating Screws	32
431X	Hex-Head Cap Screws	33
450X	Locating Pins, Round	33
460X	Locating Pins, Diamond	33
475X	Multipurpose Extension Supports	37
480X	Screw Rest Pads	44
49XX	Quick-Change Tooling Plates	23
500X	Hook Clamps, Long-Arm	57
501X	Hook Clamps, Tapped Long-Arm	57
510X	Hook-Clamp Holders	57
520X	Riser Cylinders	38
530X	Up-Thrust Clamps	56
540X	Toggle-Clamp Adaptors	63
55XX	Pallet Decoupler Adaptors	See website
550X	Clamp Adaptors	See website
550X	Manifold-and-Valve Adaptors	See website
550X	Swing-Clamp Adaptors	See website
550X	Work Support Adaptors	See website
561X	Cam Edge Clamps	58
570X	Manual Work Supports	47
600X	Horizontal V Blocks	45
610X	Vertical V Blocks	44
7XXX	Height Shims	38

Carr Lane®
MANUFACTURING CO.
4200 Carr Lane Ct., P.O. Box 191970
St. Louis, Missouri 63119-7970 USA
Phone: 314-647-6200, FAX: 314-647-5736
Web Site: www.carrlane.com

(Rev. 8-94)

INTRODUCTION

What exactly is modular fixturing? In many ways modular fixturing is just like permanent fixturing, except for a few key differences. First, modular fixtures can be assembled entirely from reusable off-the-shelf components, without machining. Next, many modular components are adjustable and universal. Finally, specially designed tooling plates and blocks, with a standard grid pattern, are the foundation of a good modular system.

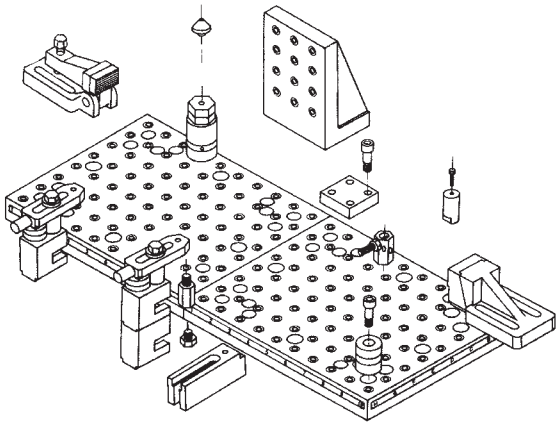

A VALUABLE TOOL FOR EVERY MACHINE SHOP:

Most metal-machining manufacturers have good applications for temporary fixturing every day! The leadtime and expense required to build a permanent fixture are often difficult to justify. This is especially true when production runs are small and do not repeat on a regular basis. General-purpose workholders — such as vises, chucks, and table mounted clamps — can be ready for production on short notice, but they are primarily suited for short runs of basic parts. Fortunately, there is now another alternative: modular fixturing. When a company adds modular fixturing to its options, even job-shop-type production can benefit from quality fixturing.

GOOD APPLICATIONS FOR MODULAR FIXTURING:

Modular fixturing is an ideal answer to many workholding problems. One-time jobs, found especially in job shops, are ideal for modular fixturing; with modular fixturing, a workholder can be economically built even for a one-part run. Jobs that do not repeat on a regular basis are well suited to modular fixturing; modular fixturing permits rapid setup of short-notice production runs. Modular fixturing is also ideal for prototype parts; since prototypes are often changed or redesigned, the cost of building a permanent fixture for each new variation would be prohibitive. Replacement parts are another perfect application; modular fixturing allows a company to respond to orders as they are received, instead of shipping parts from an inventory. Trial fixturing is also an excellent application; modular workholders allow a designer to fine tune tooling ideas before a final production workholder is built. Finally, modular fixturing is valuable while permanent fixtures are built or repaired.

THE WIDEST SELECTION OF TOOLING PLATES & BLOCKS:

Tooling plates and blocks are the main structural elements of any modular-fixturing system. The type, style, and number of plates and blocks available determine the variety of fixtures that can be built, and also the number of machine tools that can be used. The Carr Lane modular system has the largest selection of tooling plates and blocks available anywhere.

GRID HOLES VS. EARLIER T-SLOT SYSTEMS:

The two primary forms of modular systems available today are those with grid-pattern holes and earlier types with T slots to mount components. Grid holes offer many advantages over T slots. Modular systems with grid holes have greater positional accuracy and strength than those with T slots. T-slot systems permit movement along the slot, so nothing but friction holds components in place. Wherever T slots cross each other, a weak point exists.

MULTIPURPOSE GRID HOLES OFFER MAXIMUM FLEXIBILITY:

Grid-pattern modular-fixturing systems come in two styles: those with alternating dowel holes and tapped holes and those with multipurpose holes. The alternating-hole style does not offer as many advantages as the Carr Lane multipurpose-hole style. Multipurpose holes have both an alignment bushing and threaded insert in the same hole. This arrangement permits each hole to serve as an alignment hole, mounting hole, or both. Multipurpose holes are laid out in a standard 1" or 2" grid pattern (depending on the size) to allow the maximum number of mounting locations.

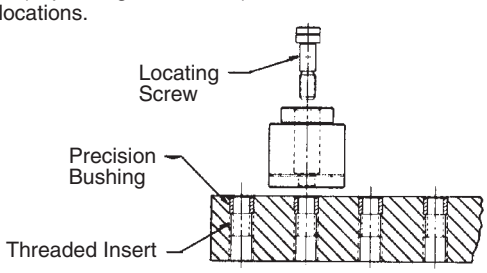

POWER WORKHOLDING CAPABILITY:

The ability to use hydraulic power workholding is another consideration in the selection of a modular-workholding system. A modular system should treat power workholding as an integral part of the complete fixturing plan. Instead of requiring special power components, a good modular system uses standard, off-the-shelf power workholding components. Adapting standard power components to modular workholders both reduces cost and expands design options. SWIFTSURE power clamps and work supports are the finest available, and work hand-in-hand with the Carr Lane modular system. Also, our HILMA precision hydraulic vises work perfectly with modular tooling plates and blocks.

CHOICE OF THREE SYSTEM SIZES:

A good modular fixturing system needs to accommodate a wide range of workpiece sizes. Only Carr Lane offers a full line of modular components in three system sizes. As a comparison to choose the proper system size, the table below shows typical clamping force exerted by clamp straps in each size (2-to-1 lever ratio).

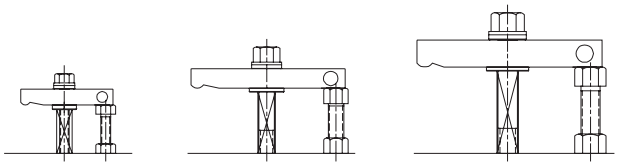

Mini 5/16-18 **Standard 1/2-13** **Heavy 5/18-11**

SIZE	STUD SIZE	RECOMMENDED TORQUE (FT-LBS)	CLAMPING FORCE (LBS)
MINI	5/16-18	9	900
STANDARD	1/2-13	38	2300
HEAVY	5/8-11	77	3700

Carr Lane®
MANUFACTURING CO.
4200 Carr Lane Ct., P.O. Box 191970
St. Louis, Missouri 63119-7970 USA
Phone: 314-647-6200, FAX: 314-647-5736
Web Site: www.carrlane.com

(Rev. 3-07)

PICTORIAL INDEX

TOOLING PLATES & BLOCKS

Rectangular
p. 14-15

Round
p. 16

Square Pallet
p. 17

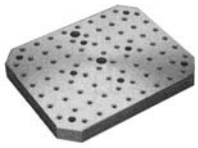
Rectangular Pallet
p. 18

Platform
p. 19

Angle
p. 20

Two-Sided
Blocks
p. 21

Four-Sided
Blocks
p. 22

Quick-Change Plates
p. 23

Window Tooling
Blocks
p. 24

Vertical Plates
p. 25

Riser Plates
p. 26

Angle Plates
p. 27

MOUNTING ACCESSORIES

Locating Screws
and Bushings
p. 32

Socket-Head
Cap Screws
p. 32

Locating
Gages
p. 33

Locating
Pins
p. 33

Hex-Head
Cap Screws
p. 33

Protection
Plugs
p. 33

SUPPORTS & LOCATORS

Clamp Riser
Blocks
p. 34

Sideways
Mounting Blocks
p. 34

Support Riser
Blocks
p. 35

Extension
Supports
p. 36-37

Height
Shims
p. 38

Riser Cylinders
p. 38

Edge Supports
p. 39

Support
Cylinders
p. 40-41

Locating-Pin
Adaptors
p. 42-43

Screw Rest Pads
p. 44

V Blocks
p. 44-45

Screw Jacks
p. 46-47

Manual Work
Supports
p. 47

Adjustable Stops
p. 48

Stop-Spring-Button
Adaptors
p. 49

CarrLane®
MANUFACTURING CO.
4200 Carr Lane Ct., P.O. Box 191970
St. Louis, Missouri 63119-7970 USA
Phone: 314-647-6200, FAX: 314-647-5736
Web Site: www.carrlane.com

(Rev. 3-07)

PICTORIAL INDEX

CLAMPS

Slotted-Heel Clamp Straps
p. 50

Double-End Clamp Straps
p. 51

High-Rise Clamps
p. 52-54

Contact Bolts
p. 55

Up-Thrust Clamps
p. 56

Swing Clamp Assemblies
p. 56

Hook Clamps
p. 57

Forged Adjustable Clamps
p. 58

Cam Edge Clamps
p. 58

Pivoting Edge Clamps
p. 59

Serrated Adjustable Clamps
p. 60-61

Screw Clamp Adaptors
p. 62

Toggle-Clamp Adaptors
p. 63

POWER WORKHOLDING

Power Units
p. 64

Fixture Hose and Accessories
p. 64

Extending Clamps
See website

Edge Clamps
See website

Block Push Clamps
See website

Swing Clamps
See website

Work Supports
See website

Distribution Manifolds
See website

Pallet Decouplers
See website

Sequence Valves
See website

Carr Lane®
MANUFACTURING CO.
4200 Carr Lane Ct., P.O. Box 191970
St. Louis, Missouri 63119-7970 USA
Phone: 314-647-6200, FAX: 314-647-5736
Web Site: www.carrlane.com

(Rev. 4-93)

TECHNICAL INFORMATION

MULTIPURPOSE HOLES

Mini

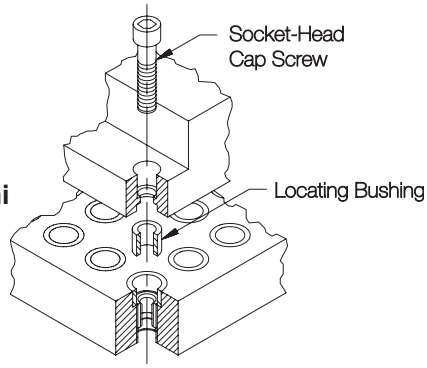

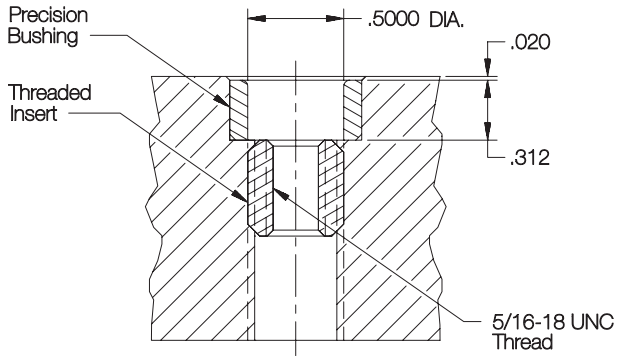

Standard

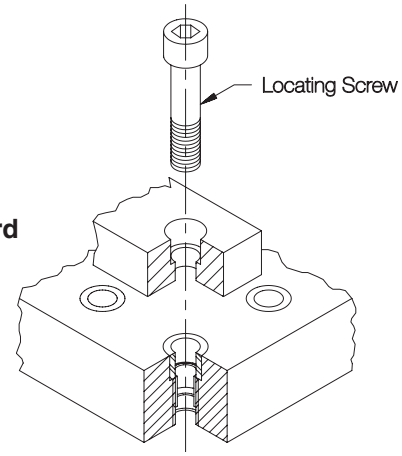

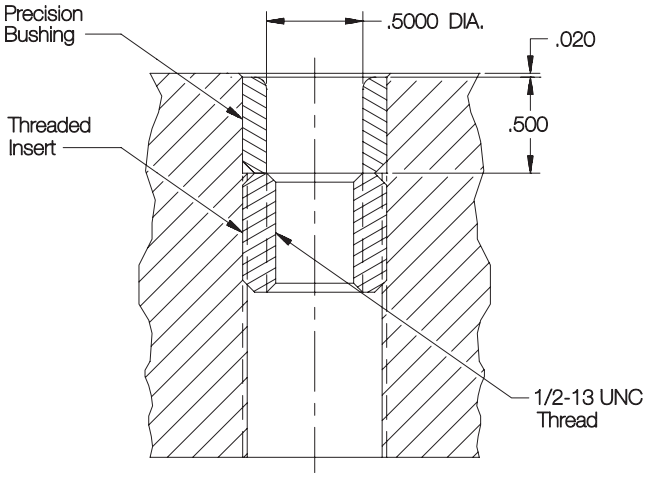

Heavy

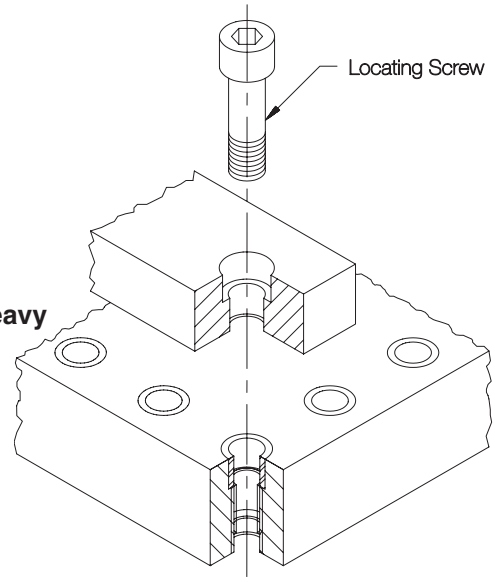

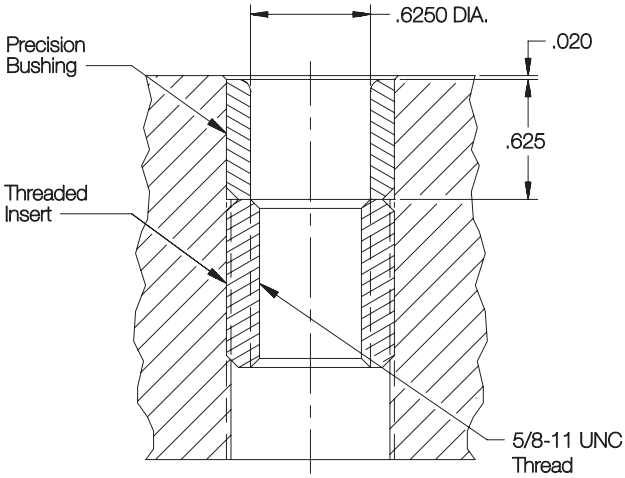

Every multipurpose hole on a tooling plate or block has a precision alignment bushing on top, with a threaded insert below it. Multipurpose holes will accept Locating Screws, socket-head cap screws, studs, and many other threaded components. The proper mounting screw for each component is listed in its table of dimensions. Locating screws are used to locate and fasten at the same time. Note: mini-size systems use a Locating Bushing together with a socket-head cap screw for extra strength, instead of a Locating Screw.

Carr Lane®
MANUFACTURING CO.
4200 Carr Lane Ct., P.O. Box 191970
St. Louis, Missouri 63119-7970 USA
Phone: 314-647-6200, FAX: 314-647-5736
Web Site: www.carrlane.com

(Rev. 8-98)

TECHNICAL INFORMATION

GRID ADDRESS SYSTEM

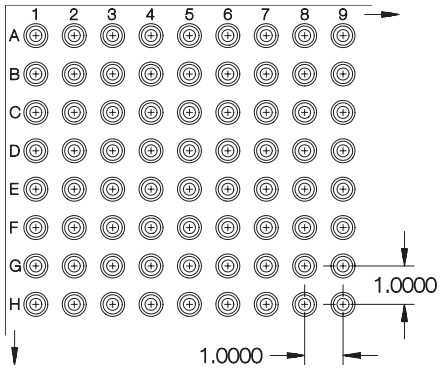

Mini

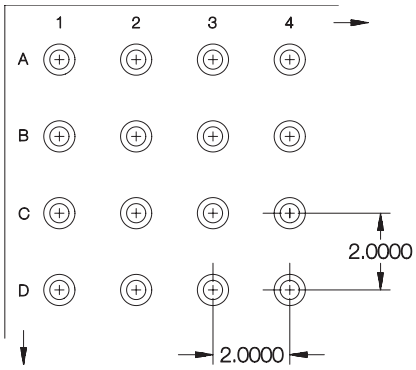

Standard

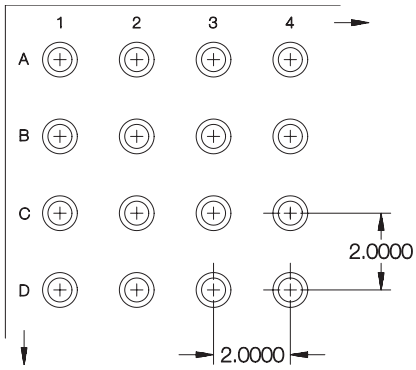

Heavy

The grid pattern of multipurpose holes on every tooling plate and tooling block face is labelled with letters in one direction and numbers in the perpendicular direction. Tooling-block faces are numbered (counterclockwise) with Roman numerals. This allows recording the mounting-hole location of each component (e.g., A2, B3, D7, etc.) as part of permanent documentation. See the bill-of-material sheet on page 9 as a sample.

Multipurpose holes are spaced within ±.0008 inches of true position on all tooling plates and blocks. The mini system is even more accurate, with all holes spaced within ±.0004 inches.

CUSTOM TOOLING PLATES

To build your own custom tooling plates with multipurpose mounting holes, we offer precision bushings and threaded inserts separately. See hole locations and tolerances above (holes must be jig bored), and page 4 for proper counterbore depth to install bushings. The threaded insert's locking keys can be driven down by the bushing as it is pressed into the tooling plate.

Precision Bushing

PRECISION BUSHINGS

SIZE	PART NO.	ID	OD	LENGTH
MINI	CL-MF25-0101-02	.5003/.5005	.6247/.6244	.312
STANDARD	CL-MF40-0101-02	.5006/.5013	.8122/.8119	.500
HEAVY	CL-MF50-0101-02	.6256/.6263	.9060/.9056	.625

Key Insert

KEY INSERTS

SIZE	PART NO.	ID THREAD	OD THREAD	LENGTH
MINI	CL-51618-KS	5/16-18	1/2-13	7/16
STANDARD	CL-1213-KS	1/2-13	3/4-16	5/8
HEAVY	CL-5811-KS	5/8-11	7/8-14	7/8

Carr Lane MANUFACTURING CO.
4200 Carr Lane Ct., P.O. Box 191970
St. Louis, Missouri 63119-7970 USA
Phone: 314-647-6200, FAX: 314-647-5736
Web Site: www.carrlane.com

(Rev. 3-07)

TECHNICAL INFORMATION

MOUNTING TOOLING PLATES ON T-SLOTTED TABLES

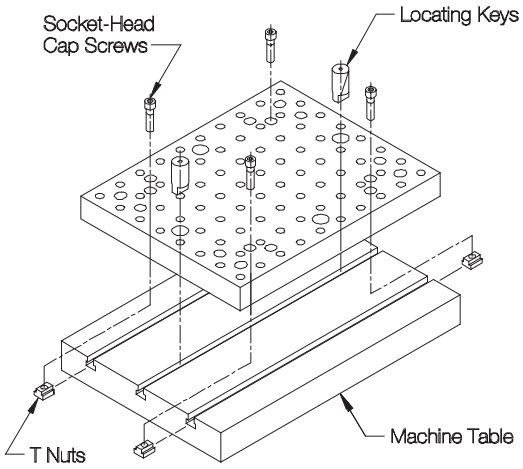

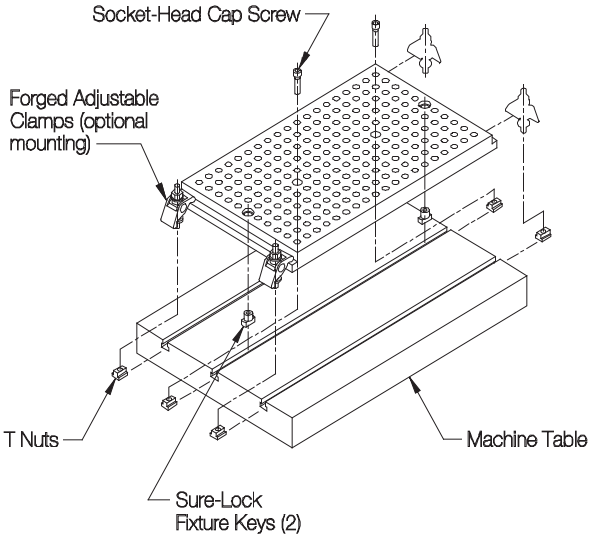

Standard and Heavy

Standard and heavy Rectangular Tooling Plates are accurately located on T-slotted tables using two Locating Keys (page 177 of tooling-component catalog section) in the center table slot. These plates are fastened to the machine table using four or six socket-head cap screws (page 32) and T Nuts (page 225 of tooling-component catalog section). Swivel Hoist Rings are recommended for lifting large tooling plates (page 36 of tooling-component catalog section).

Mini Only

Mini-size Rectangular Tooling Plates are accurately located on T-slotted tables using two Sure-Lock Fixture Keys (page 176 of tooling-component catalog section) in the center table slot. These plates are normally fastened to the machine table using two or three socket-head cap screws (page 32) and T Nuts (page 225 of tooling-component catalog section). Alternatively, four Forged Adjustable Clamps (page 213 of tooling-component catalog section) can be used for greater holding force.

MOUNTING TOOLING PLATES ON SUBPLATES

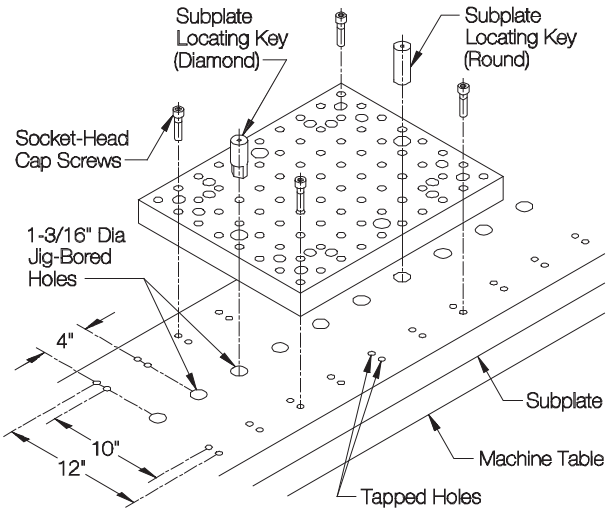

Mini, Standard, and Heavy

All Rectangular Tooling Plates can be mounted as quick-change fixture plates on a subplate, as well as directly on a T-slotted machine table. Instead of the Locating Keys and Sure-Lock Fixture Keys used above for two-axis location, Subplate Locating Keys (page 177 of tooling-component catalog section) are used for three-axis location. A round key and a diamond (relieved) key are used together for precise location without binding. The subplate hole pattern shown here allows mounting any size and combination of standard or heavy Rectangular Tooling Plates, either lengthwise or widthwise.

Carr Lane®
MANUFACTURING CO.
4200 Carr Lane Ct., P.O. Box 191970
St. Louis, Missouri 63119-7970 USA
Phone: 314-647-6200, FAX: 314-647-5736
Web Site: www.carrlane.com

(Rev. 3-07)

TECHNICAL INFORMATION

MOUNTING TOOLING PLATES & BLOCKS ON PALLETS

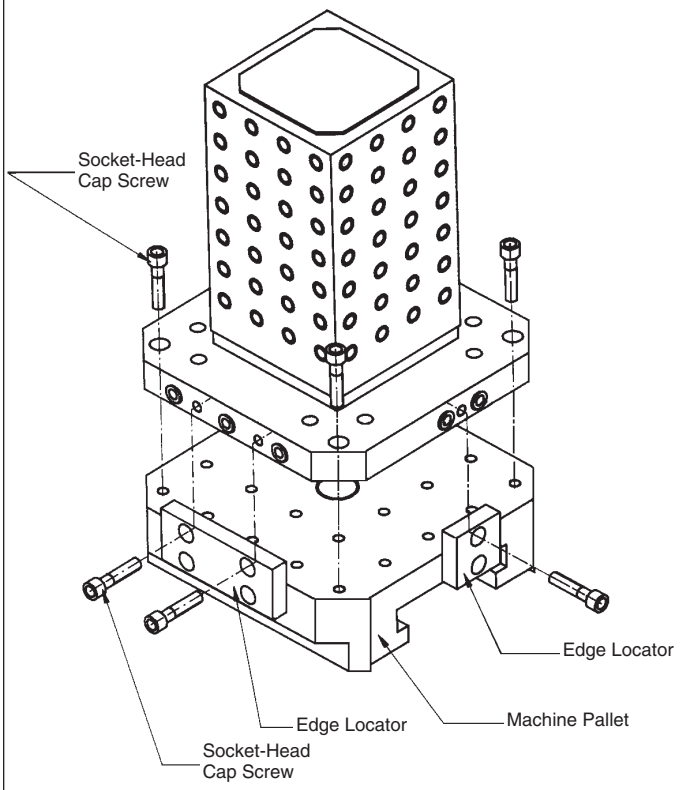

JIS Mounting

JIS-type mounting is the most-common way to mount tooling plates and blocks on a machining-center pallet. Here the plate or block is located from two precisely ground reference edges at 90° to each other. The plate or block is pulled against the pallet's edge locators using three socket-head cap screws (page 32) and also fastened down with four to eight socket-head cap screws, depending on the size. Swivel Hoist Rings are recommended for lifting tooling blocks and large tooling plates (page 36 of tooling-component catalog section).

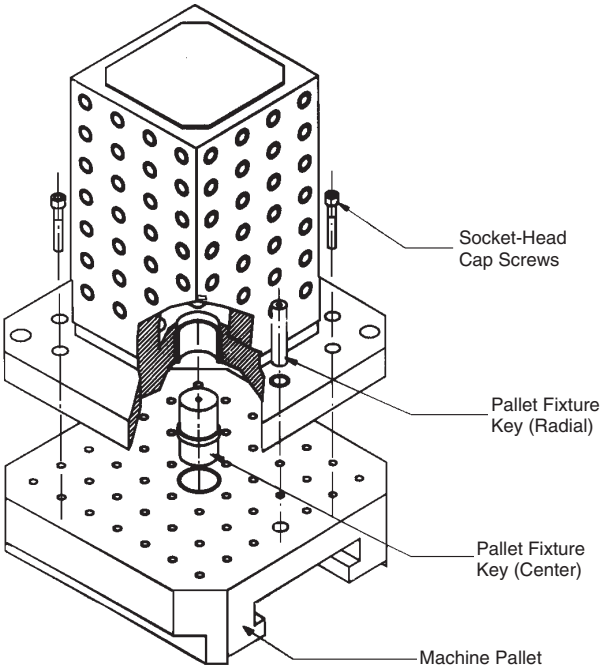

DIN Mounting

Most of our modular tooling plates and blocks also incorporate DIN-mounting capability. Here the plate or block is located using a center hole, and oriented using a radial hole. Two Pallet Fixture Keys, a center pin and a radial pin, are required (page 178 of tooling-component catalog section). The plate or block is fastened down with four to eight socket-head cap screws, depending on the size.

PALLET SIZE	PALLET CENTER-HOLE DIA	PALLET RADIAL-HOLE DIA	DISTANCE BETWEEN CENTER AND RADIAL HOLES
320mm	50mm	20mm	100mm
400mm			150mm
500mm			200mm
630mm		25mm	200mm
800mm			300mm

CarrLane®
MANUFACTURING CO.
4200 Carr Lane Ct., P.O. Box 191970
St. Louis, Missouri 63119-7970 USA
Phone: 314-647-6200, FAX: 314-647-5736
Web Site: www.carrlane.com

(Rev. 3-07)

TOOLROOM STARTER SETS

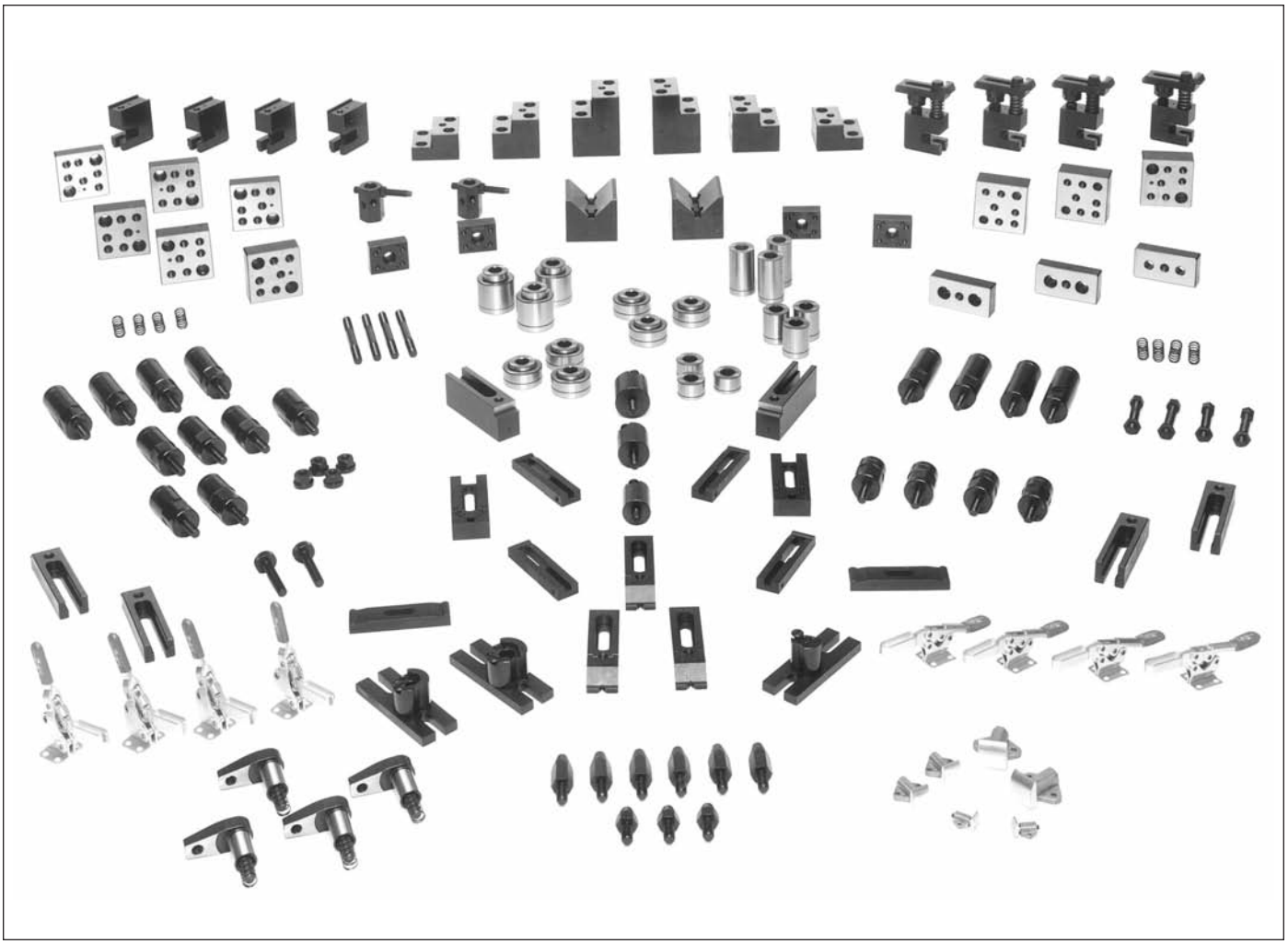

BASIC STARTER SET

Economical starter sets to build one fixture at a time on a typical milling machine. This set includes matching sizes of our most-popular components, plus all necessary mounting screws. Order a tooling plate and Locating Keys separately to fit specific machines. For a complete listing of components, see pages 11-13.

10% OFF INDIVIDUAL PRICES WHEN ORDERED IN THESE SETS!

ONE-FIXTURE SETS

SIZE	PART NO.	NUMBER OF PIECES
MINI	CL-MF25-SS1B	533
STANDARD	CL-MF40-SS1B	481
HEAVY	CL-MF50-SS1B	411

Carr Lane®
MANUFACTURING CO.
4200 Carr Lane Ct., P.O. Box 191970
St. Louis, Missouri 63119-7970 USA
Phone: 314-647-6200, FAX: 314-647-5736
Web Site: www.carrlane.com

(Rev. 3-07)

TOOLROOM STARTER SETS

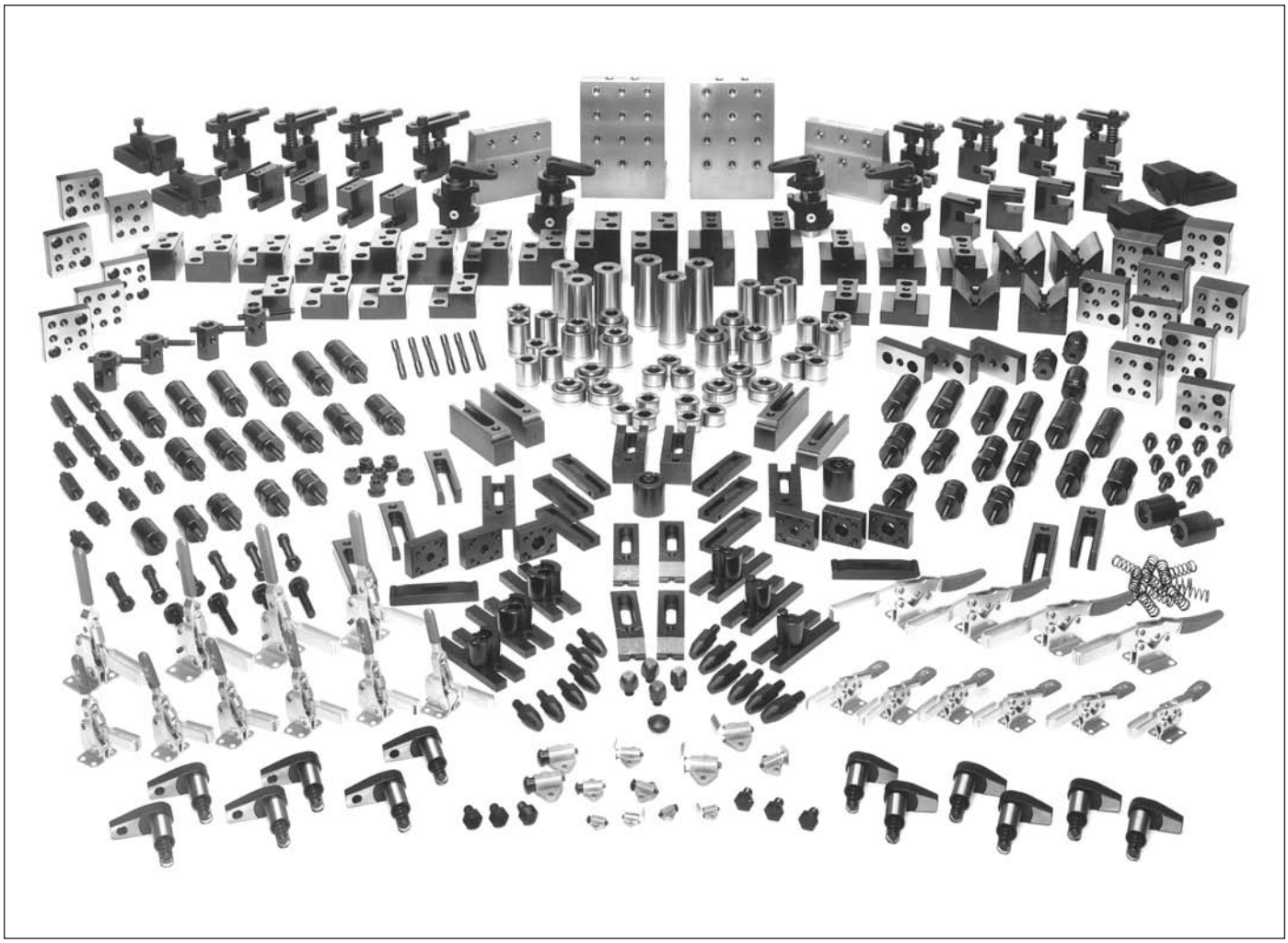

COMPLETE STARTER SET

Comprehensive starter sets that allow fixturing almost any part. The one-fixture set (shown above) is ideal for building any one fixture at a time on most milling machines and machining centers. The four-fixture set (not shown) contains enough of most components to build four identical fixtures, ideal for tooling blocks on horizontal machining centers. Order tooling plates, tooling blocks, and Locating Keys separately to fit specific machines. For a complete listing of components, see pages 11-13.

10% OFF INDIVIDUAL PRICES WHEN ORDERED IN THESE SETS!

ONE-FIXTURE SETS

SIZE	PART NO.	NUMBER OF PIECES
MINI	CL-MF25-SS1C	1196
STANDARD	CL-MF40-SS1C	1161
HEAVY	CL-MF50-SS1C	892

FOUR-FIXTURE SETS

MINI	CL-MF25-SS4C	3275
STANDARD	CL-MF40-SS4C	3076
HEAVY	CL-MF50-SS4C	2428

Carr Lane®
MANUFACTURING CO.
4200 Carr Lane Ct., P.O. Box 191970
St. Louis, Missouri 63119-7970 USA
Phone: 314-647-6200, FAX: 314-647-5736
Web Site: www.carrlane.com

(Rev. 3-07)

TOOLROOM STARTER SETS

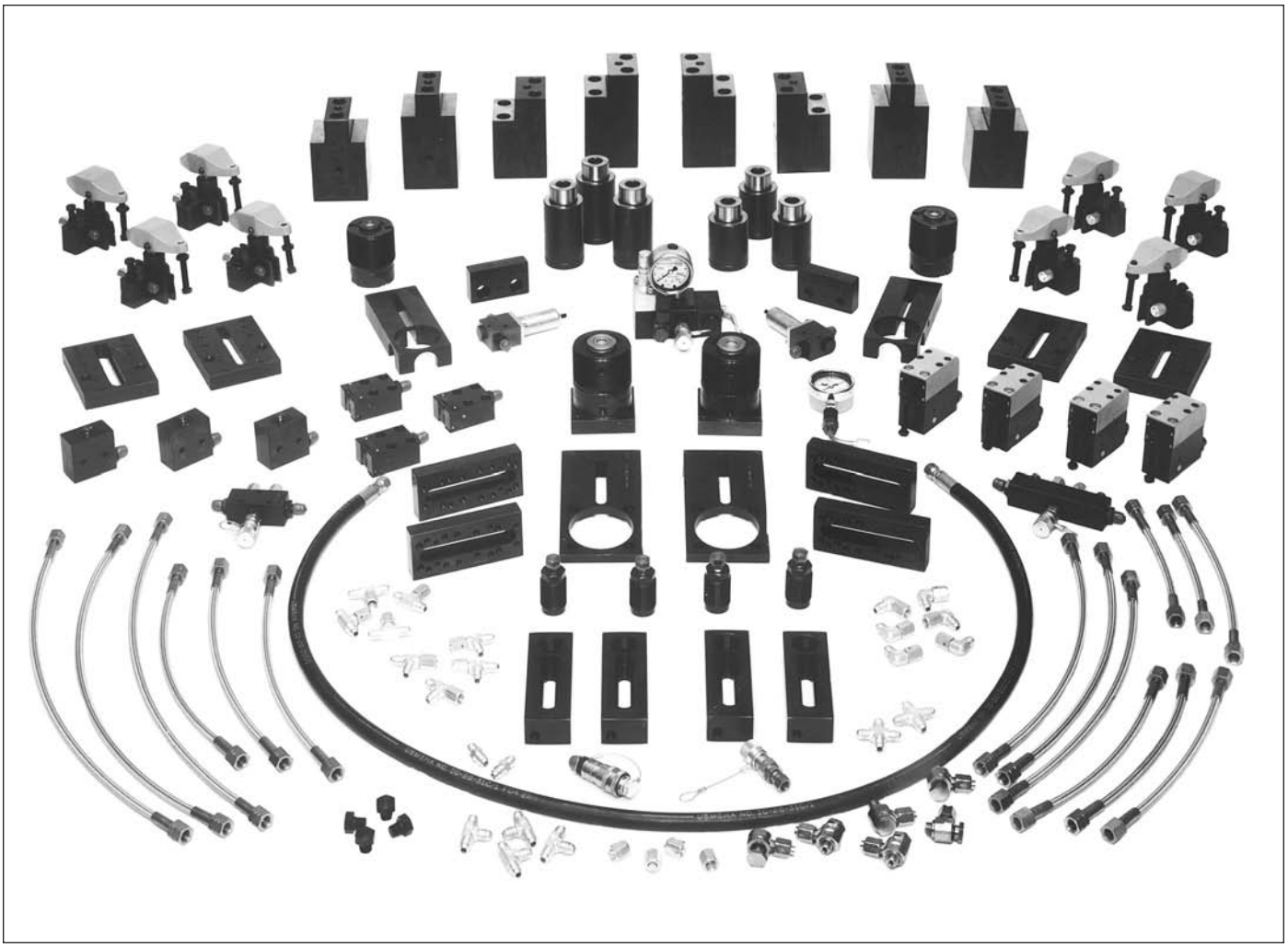

POWER-WORKHOLDING ADD-ON SET

Adds power-workholding capability to the starter sets shown on the previous two pages. These fully reusable hydraulic components include clamps, work supports, valves, fixture hoses, fittings, and other accessories. The one-fixture add-on set adds power to either the one-fixture basic starter set, or the one-fixture complete starter set. The four-fixture add-on set (not shown) complements the four-fixture complete starter set. Order hydraulic power unit separately (see SWIFTSURE catalog section.) For a complete list of components, see pages 11-13.

10% OFF INDIVIDUAL PRICES WHEN ORDERED IN THESE SETS!

ONE-FIXTURE SETS

SIZE	PART NO.	NUMBER OF PIECES
MINI	—	—
STANDARD	CL-MF40-SS1P	307
HEAVY	CL-MF50-SS1P	238

FOUR-FIXTURE SETS

MINI	—	—
STANDARD	CL-MF40-SS4P	932
HEAVY	CL-MF50-SS4P	704

Carr Lane®
MANUFACTURING CO.
4200 Carr Lane Ct., P.O. Box 191970
St. Louis, Missouri 63119-7970 USA
Phone: 314-647-6200, FAX: 314-647-5736
Web Site: www.carrlane.com

(Rev. 8-98)

TOOLROOM STARTER SETS

COMPONENTS IN STARTER SET			QTY. IN SET*				
			SS1B	SS1C	SS4C	SS1P	SS4P
Angle Plates	MINI		—	—	—	—	—
	STANDARD	CL-MF40-0511	—	2	4	—	—
		CL-MF40-0512	—	2	2	—	—
	HEAVY	CL-MF50-0501	—	2	4	—	—
		CL-MF50-0502	—	2	2	—	—
Riser Plates	MINI	CL-MF25-0900	—	1	1	—	—
	STANDARD		—	—	—	—	—
	HEAVY	—	—	—	—	—	—
Pivoting Edge Clamps	MINI	—	—	—	—	—	—
	STANDARD	CL-MF40-1001	—	2	8	—	—
	HEAVY	CL-MF50-1001	—	2	8	—	—
Downthrust Backstops	MINI	—	—	—	—	—	—
	STANDARD	CL-MF40-1101	—	2	8	—	—
	HEAVY	CL-MF50-1101	—	2	8	—	—
Screw-Clamp Adaptors	MINI	CL-MF25-1251	3	3	12	—	—
	STANDARD	CL-MF40-1251	3	3	12	—	—
	HEAVY	CL-MF50-1251	3	3	12	—	—
Support Riser Blocks	MINI	CL-MF25-1411	3	4	12	—	—
		CL-MF25-1412	3	4	12	—	—
		CL-MF25-1413	3	4	12	—	—
		CL-MF25-1414	—	4	12	—	—
	STANDARD	CL-MF40-1411	3	4	12	—	—
		CL-MF40-1412	3	4	12	—	—
		CL-MF40-1413	3	4	12	—	—
		CL-MF40-1414	—	4	12	—	—
	HEAVY	CL-MF50-1411	3	4	12	—	—
		CL-MF50-1412	3	4	12	—	—
		CL-MF50-1413	3	4	12	—	—
		CL-MF50-1414	—	4	12	—	—
Multipurpose Riser Blocks	MINI	CL-MF25-1461	4	8	16	—	—
		CL-MF25-1462	4	8	16	—	—
	STANDARD	CL-MF40-1462	4	8	16	—	—
		CL-MF40-1463	4	8	16	—	—
	HEAVY	CL-MF50-1463	4	8	16	—	—
Sideways Mounting Blocks	MINI	CL-MF25-1650	2	4	8	—	—
	STANDARD	CL-MF40-1650	2	4	8	—	—
	HEAVY	CL-MF50-1650	2	4	8	—	—
High-Rise Clamps, Tapped-Nose	MINI	CL-MF25-2001	—	4	8	—	—
	STANDARD	CL-MF40-2001	—	4	8	—	—
	HEAVY	CL-MF50-2001	—	4	8	—	—
High-Rise Clamps, Standard-Nose	MINI	CL-MF25-2051	4	4	8	—	—
		CL-MF25-2052	—	4	8	—	—
	STANDARD	—	—	—	—	—	—
	HEAVY	—	—	—	—	—	—
High-Rise Clamps, Gooseneck	MINI	—	—	—	—	—	—
	STANDARD	CL-MF40-2101	4	4	8	—	—
	HEAVY	CL-MF50-2101	4	4	8	—	—
Narrow Riser Blocks	MINI	CL-MF25-2301	4	8	8	—	—
	STANDARD	CL-MF40-2301	4	8	8	—	—
	HEAVY	CL-MF50-2301	4	4	8	—	—
Spacer Blocks	MINI	CL-MF25-2351	4	8	16	—	—
	STANDARD	CL-MF40-2351	4	8	16	—	—
	HEAVY	CL-MF50-2351	4	8	16	—	—
Swivel Contact Bolts	MINI	CL-MF25-2502	—	4	8	—	—
	STANDARD	CL-MF40-2501	—	4	8	—	—
	HEAVY	CL-MF50-2501	—	4	8	—	—

* No substitutions please.

Contact-Bolt Extensions	MINI	CL-MF25-2601	—	4	8	—	—
		CL-MF25-2602	—	4	8	—	—
		CL-MF25-2603	—	4	8	—	—
	STANDARD	CL-MF40-2601	—	4	8	—	—
		CL-MF40-2602	—	4	8	—	—
		CL-MF40-2603	—	4	8	—	—
	HEAVY	CL-MF50-2601	—	4	8	—	—
		CL-MF50-2602	—	4	8	—	—
		CL-MF50-2603	—	4	8	—	—
Adjustable Stops	MINI	CL-MF25-2901	2	4	8	—	—
	STANDARD	CL-MF40-2901	2	4	8	—	—
	HEAVY	CL-MF50-2901	2	4	8	—	—
Support Cylinders	MINI	CL-MF25-3101	6	12	24	—	—
		CL-MF25-3102	—	3	12	—	—
		CL-MF25-3103	6	12	24	—	—
		CL-MF25-3104	—	3	12	—	—
		CL-MF25-3105	—	3	12	—	—
		CL-MF25-3106	—	3	12	—	—
		CL-MF25-3107	3	6	12	—	—
	STANDARD	CL-MF40-3101	3	6	12	—	—
		CL-MF40-3102	3	6	12	—	—
		CL-MF40-3103	3	3	12	—	—
		CL-MF40-3104	—	3	12	—	—
		CL-MF40-3105	—	3	12	—	—
		CL-MF40-3112	—	3	12	—	—
		CL-MF40-3113	—	3	12	—	—
		CL-MF40-3114	—	3	12	—	—
	HEAVY	CL-MF50-3101	3	6	24	—	—
		CL-MF50-3102	3	3	12	—	—
		CL-MF50-3103	—	3	12	—	—
		CL-MF50-3104	—	3	12	—	—
		CL-MF50-3112	3	6	24	—	—
		CL-MF50-3113	—	3	12	—	—
		CL-MF50-3114	—	3	12	—	—
		CL-MF50-3115	—	—	—	3	6
Relieved Support Cylinders	MINI	CL-MF25-3152	—	3	12	—	—
		CL-MF25-3154	—	3	12	—	—
	STANDARD	CL-MF40-3152	3	3	12	—	—
		CL-MF40-3154	—	3	12	—	—
		CL-MF40-3155	3	3	12	—	—
	HEAVY	CL-MF50-3153	3	3	12	—	—
		CL-MF50-3155	3	3	12	—	—
Shoulder Support Cylinders	MINI	CL-MF25-3200	6	12	24	—	—
		CL-MF25-3202	—	6	12	—	—
		CL-MF25-3204	—	6	12	—	—
		CL-MF25-3206	3	6	12	—	—
	STANDARD	CL-MF40-3202	3	6	12	—	—
		CL-MF40-3204	3	6	12	—	—
		CL-MF40-3205	3	6	12	—	—
		CL-MF40-3207	—	—	—	3	12
		CL-MF40-3208	—	—	—	3	12
	HEAVY	CL-MF50-3202	3	6	12	—	—
		CL-MF50-3204	3	6	12	—	—
Extension Supports	MINI	CL-MF25-3301	2	3	12	—	—
		CL-MF25-3302	—	3	12	—	—
		CL-MF25-3303	2	3	12	—	—
		CL-MF25-3305	2	3	12	—	—
	STANDARD	CL-MF40-3300	2	3	12	—	—
		CL-MF40-3301	2	3	12	—	—
		CL-MF40-3302	2	3	12	—	—
	HEAVY	CL-MF50-3301	2	3	12	—	—
		CL-MF50-3302	2	3	12	—	—
Heavy-Duty Screw Jacks	MINI	—	—	—	—	—	—
	STANDARD	CL-MF40-3401	—	1	1	—	—
		CL-MF40-3402	—	1	1	—	—
		CL-MF40-3403	—	1	1	—	—
	HEAVY	CL-MF50-3401	—	1	1	—	—
		CL-MF50-3402	—	1	1	—	—
		CL-MF50-3403	—	1	1	—	—
Screw-Jack Tips	MINI	—	—	—	—	—	—
	STANDARD	CL-MF10-3501	—	1	1	—	—
	HEAVY	CL-MF10-3501	—	1	1	—	—
Halfway Extension Supports	MINI	CL-MF25-3601	4	4	16	—	—
		CL-MF25-3603	—	4	16	—	—
		CL-MF25-3605	—	4	16	—	—
	STANDARD	CL-MF40-3601	3	3	12	—	—
	HEAVY	CL-MF50-3602	4	4	16	—	—
Edge Supports, Single	MINI	CL-MF25-3700	4	4	16	—	—
		CL-MF25-3702	—	4	16	—	—
	STANDARD	CL-MF40-3702	2	4	8	—	—
		CL-MF40-3704	—	4	8	—	—
		CL-MF40-3705	2	4	8	—	—
		CL-MF40-3707	—	—	—	2	8
		CL-MF40-3708	—	—	—	2	8
		CL-MF40-3709	—	—	—	2	4
	HEAVY	CL-MF50-3702	2	4	8	—	—
		CL-MF50-3704	2	4	8	—	—
		CL-MF50-3708	—	—	—	2	4

CONTINUED ON NEXT PAGE

CarrLane MANUFACTURING CO.
4200 Carr Lane Ct., P.O. Box 191970
St. Louis, Missouri 63119-7970 USA
Phone: 314-647-6200, FAX: 314-647-5736
Web Site: www.carrlane.com

(Rev. 8-97)

CONTINUED FROM PRECEDING PAGE

Edge Supports, Double	MINI	CL-MF25-3800	2	3	12	—	—
		CL-MF25-3802	—	3	12	—	—
	STANDARD	CL-MF40-3802	—	2	4	—	—
		CL-MF40-3804	—	2	4	—	—
		CL-MF40-3805	—	2	4	—	—
		CL-MF40-3807	—	—	—	2	4
		CL-MF40-3808	—	—	—	2	4
		CL-MF40-3809	—	—	—	2	4
	HEAVY	CL-MF50-3802	—	2	4	—	—
		CL-MF50-3804	—	2	4	—	—
		CL-MF50-3808	—	—	—	2	4
Spring-Stop-Button Adaptors	MINI	CL-MF25-3901	2	4	16	—	—
	STANDARD	CL-MF40-3902	2	2	8	—	—
		CL-MF40-3904	—	2	8	—	—
	HEAVY	CL-MF50-3903	2	2	8	—	—
Locating-Pin Adaptors	MINI	CL-MF25-4101	1	4	8	—	—
		CL-MF25-4102	1	4	8	—	—
		CL-MF25-4103	1	4	8	—	—
		CL-MF25-4104	1	4	8	—	—
	STANDARD	CL-MF40-4102	1	2	4	—	—
		CL-MF40-4103	1	2	4	—	—
		CL-MF40-4105	1	2	4	—	—
		CL-MF40-4112	—	—	—	2	2
		CL-MF40-4114	—	—	—	2	2
		CL-MF40-4116	—	—	—	2	2
	HEAVY	CL-MF50-4102	1	2	4	—	—
		CL-MF50-4103	1	2	4	—	—
		CL-MF50-4105	1	2	4	—	—
Adjustable Locating-Pin Adaptors	MINI	—	—	—	—	—	—
	STANDARD	CL-MF40-4202	1	2	4	—	—
		CL-MF40-4203	1	2	4	—	—
		CL-MF40-4205	1	2	4	—	—
	HEAVY	CL-MF50-4202	1	2	4	—	—
		CL-MF50-4203	1	2	4	—	—
		CL-MF50-4205	1	2	4	—	—
Locating Bushings	MINI	CL-MF25-4300	36	78	242	—	—
	STANDARD	—	—	—	—	—	—
	HEAVY	—	—	—	—	—	—
Locating Screws	MINI	—	—	—	—	—	—
	STANDARD	CL-MF40-4301	34	74	140	—	—
		CL-MF40-4302	12	58	172	6	24
		CL-MF40-4303	8	16	32	24	64
	HEAVY	CL-MF50-4301	20	43	116	—	—
		CL-MF50-4302	15	52	124	3	6
		CL-MF50-4303	—	3	12	8	16
Hex-Head Cap Screws	MINI	CL-MF25-4311	4	12	24	—	—
		CL-MF25-4312	8	20	32	—	—
		CL-MF25-4313	4	8	8	—	—
	STANDARD	CL-MF40-4311	8	16	24	—	—
		CL-MF40-4312	4	8	8	—	—
		CL-MF40-4313	4	8	8	—	—
	HEAVY	CL-MF50-4311	8	12	24	—	—
		CL-MF50-4312	4	4	8	—	—
		CL-MF50-4313	4	4	8	—	—
Multipurpose Extension Supports	MINI	CL-MF25-4751	2	2	8	—	—
	STANDARD	CL-MF40-4751	2	2	8	—	—
	HEAVY	CL-MF50-4751	2	2	8	—	—
Screw Rest Pads	MINI	CL-MF25-4801	—	6	24	—	—
		CL-MF25-4803	6	12	24	—	—
		CL-MF25-4804	—	6	24	—	—
		CL-MF25-4805	6	12	24	—	—
		CL-MF25-4806	—	6	24	—	—
		CL-MF25-4807	6	12	24	—	—
	STANDARD	CL-MF40-4801	—	3	12	—	—
		CL-MF40-4803	—	3	12	—	—
		CL-MF40-4804	—	3	12	—	—
		CL-MF40-4805	3	6	12	—	—
		CL-MF40-4807	—	6	12	—	—
		CL-MF40-4808	3	6	12	—	—
	HEAVY	CL-MF50-4803	—	3	12	—	—
		CL-MF50-4804	—	3	12	—	—
		CL-MF50-4805	—	3	12	—	—
		CL-MF50-4806	3	6	24	—	—
		CL-MF50-4807	—	3	12	—	—
		CL-MF50-4808	3	6	24	—	—
Hook Clamps	MINI	CL-MF25-5002	6	8	24	—	—
		CL-MF25-5013	6	8	24	—	—
	STANDARD	CL-MF40-5002	—	6	24	—	—
		CL-MF40-5013	4	6	24	—	—
	HEAVY	CL-MF50-5002	—	6	24	—	—
		CL-MF50-5014	4	6	24	—	—
Hook-Clamp Holders	MINI	CL-MF25-5101	6	8	24	—	—
	STANDARD	CL-MF40-5101	4	6	24	—	—
		CL-MF40-5102	4	6	24	—	—
	HEAVY	CL-MF50-5101	4	6	24	—	—
		CL-MF50-5102	4	6	24	—	—
Riser Cylinders	MINI	CL-MF25-5201	4	6	16	—	—
		CL-MF25-5203	4	6	16	—	—
	STANDARD	CL-MF40-5201	4	6	16	—	—
		CL-MF40-5203	—	6	6	—	—
		CL-MF40-5204	4	6	6	—	—
	HEAVY	CL-MF50-5201	4	6	16	—	—
		CL-MF50-5203	—	6	6	—	—
		CL-MF50-5204	4	6	6	—	—

Up-Thrust Clamps	MINI	—	—	—	—	—	—
	STANDARD	CL-MF40-5301	—	4	12	—	—
	HEAVY	—	—	—	—	—	—
Toggle-Clamp Adaptors	MINI	CL-MF25-5401	4	6	16	—	—
	STANDARD	CL-MF40-5401	4	6	16	—	—
	HEAVY	—	—	—	—	—	—
Clamp Adaptors	MINI	—	—	—	—	—	—
	STANDARD	CL-MF40-5501	—	—	—	4	12
	HEAVY	CL-MF50-5501	—	—	—	4	12
Swing-Clamp Adaptors	MINI	—	—	—	—	—	—
	STANDARD	CL-MF40-5502	—	—	—	4	8
	HEAVY	CL-MF50-5502	—	—	—	4	8
Work-Support Adaptors	MINI	—	—	—	—	—	—
	STANDARD	CL-MF40-5504	—	—	—	4	12
		CL-MF40-5505	—	—	—	2	8
		CL-MF40-5507	—	—	—	2	2
	HEAVY	CL-MF50-5507	—	—	—	2	4
Manifold-and-Valve Adaptors	MINI	—	—	—	—	—	—
	STANDARD	CL-MF40-5508	—	—	—	2	8
	HEAVY	CL-MF50-5508	—	—	—	2	8
Cam Edge Clamps	MINI	CL-MF25-5611	3	3	12	—	—
	STANDARD	CL-MF40-5611	3	3	12	—	—
	HEAVY	—	—	—	—	—	—
Manual Work Supports	MINI	CL-MF25-5701	2	4	8	—	—
	STANDARD	CL-MF40-5701	1	2	8	—	—
	HEAVY	CL-MF50-5701	1	2	8	—	—
Horizontal V Blocks	MINI	CL-MF25-6001	2	4	16	—	—
		CL-MF25-6002	2	4	16	—	—
	STANDARD	CL-MF40-6002	2	4	16	—	—
	HEAVY	CL-MF50-6002	2	4	8	—	—
Height Shims	MINI	CL-MF25-7002	—	10	10	—	—
		CL-MF25-7003	—	10	10	—	—
		CL-MF25-7004	—	10	10	—	—
		CL-MF25-7005	—	10	10	—	—
		CL-MF25-7010	—	10	10	—	—
		CL-MF25-7020	—	10	10	—	—
		CL-MF25-7062	—	10	10	—	—
		CL-MF25-7125	—	10	10	—	—
	STANDARD	CL-MF40-7002	—	10	10	—	—
		CL-MF40-7003	—	10	10	—	—
		CL-MF40-7004	—	10	10	—	—
		CL-MF40-7005	—	10	10	—	—
		CL-MF40-7010	—	10	10	—	—
		CL-MF40-7020	—	10	10	—	—
		CL-MF40-7062	—	10	10	—	—
		CL-MF40-7125	—	10	10	—	—
	HEAVY	CL-MF50-7002	—	10	10	—	—
		CL-MF50-7003	—	10	10	—	—
		CL-MF50-7004	—	10	10	—	—
		CL-MF50-7005	—	10	10	—	—
		CL-MF50-7010	—	10	10	—	—
		CL-MF50-7020	—	10	10	—	—
		CL-MF50-7062	—	10	10	—	—
		CL-MF50-7125	—	10	10	—	—
Clamp Rests	MINI	CL-1A-CR	8	12	32	—	—
		CL-1B-CR	8	12	32	—	—
	STANDARD	CL-4-CR	4	6	16	—	—
		CL-5-CR	4	6	16	—	—
	HEAVY	CL-6-CR	4	6	16	—	—
		CL-7-CR	4	6	16	—	—
Clamp Straps	MINI	CL-1A-CS	8	12	32	—	—
		CL-1B-CS	8	12	32	—	—
		CL-23D-CS	2	4	8	—	—
	STANDARD	CL-8-CS	4	6	16	—	—
		CL-10-CS	4	6	16	—	—
		CL-30-CS	2	2	8	—	—
	HEAVY	CL-16-CS	4	6	16	—	—
		CL-18-CS	4	6	16	—	—
		CL-33-CS	2	2	8	—	—
Forged Adjustable Clamps	MINI	—	—	—	—	—	—
	STANDARD	CL-8-FAC	4	4	16	—	—
	HEAVY	CL-10-FAC	4	4	16	—	—
Flat Washers	MINI	CL-14-FW	8	12	32	—	—
	STANDARD	CL-2-FW	4	6	16	—	—
	HEAVY	CL-3-FW	4	6	16	—	—
Horizontal Toggle Clamps	MINI	CL-450-HTC	4	6	16	—	—
	STANDARD	CL-450-HTC	4	6	16	—	—
		CL-550-HTC	—	4	16	—	—
	HEAVY	—	—	—	—	—	—
Jam Nuts	MINI	CL-5-JN	8	12	32	—	—
	STANDARD	CL-8-JN	4	6	16	—	—
	HEAVY	CL-10-JN	4	6	16	—	—
Knob Shoe Assemblies	MINI	CL-4-KSA	3	3	12	—	—
	STANDARD	CL-9-KSA	3	3	12	—	—
	HEAVY	CL-11-KSA	3	3	12	—	—

CONTINUED ON NEXT PAGE

MANUFACTURING CO.
4200 Carr Lane Ct., P.O. Box 191970
St. Louis, Missouri 63119-7970 USA
Phone: 314-647-6200, FAX: 314-647-5736
Web Site: www.carrlane.com

(Rev. 3-06)

CONTINUED FROM PRECEDING PAGE

Knurled Screw Jacks	MINI	CL-0-KSJ	2	4	8	—	—
	STANDARD	CL-7-KSJ	2	2	8	—	—
	HEAVY	CL-10-KSJ	2	2	8	—	—
Push/Pull Toggle Clamps	MINI	CL-200-PC	—	3	8	—	—
	STANDARD	CL-200-PC	—	3	8	—	—
	HEAVY	—	—	—	—	—	—
Standard Adjustable Spindles	MINI	CL-516212-SA	8	12	32	—	—
		CL-38314-SA	—	3	8	—	—
	STANDARD	CL-12314-SA	4	6	24	—	—
		CL-38314-SA	—	14	48	—	—
		CL-516212-SA	8	12	32	—	—
	HEAVY	CL-58438-SA	4	6	24	—	—
Serrated Adjustable Clamps	MINI	CL-00-SAC	—	4	12	—	—
		CL-5-SAC	3	4	12	—	—
	STANDARD	CL-50-SAC	—	4	12	—	—
		CL-55-SAC	3	4	12	—	—
	HEAVY	CL-90-SAC	—	4	12	—	—
		CL-95-SAC	3	4	12	—	—
Socket-Head Cap Screws	MINI	CL-6-32X.50-SHCS	8	16	64	—	—
		CL-1/4-20X.62-SHCS	16	24	64	—	—
		CL-5/16-18X.62-SHCS	23	30	104	—	—
		CL-5/16-18X.75-SHCS	25	60	200	—	—
		CL-5/16-18X1.00-SHCS	33	58	192	—	—
		CL-5/16-18X1.12-SHCS	57	139	388	—	—
		CL-5/16-18X1.38-SHCS	34	72	216	—	—
		CL-5/16-18X1.50-SHCS	20	37	148	—	—
		CL-5/16-18X1.75-SHCS	—	4	4	—	—
		CL-5/16-18X2.00-SHCS	—	8	24	—	—
		CL-5/16-18X2.50-SHCS	4	16	40	—	—
	STANDARD	CL-6-32X.50-SHCS	4	8	32	—	—
		CL-10-32X.50-SHCS	28	90	204	6	24
		CL-1/4-20X.62-SHCS	16	24	64	—	—
		CL-1/4-20X.75-SHCS	4	8	32	—	—
		CL-1/4-20X2.00-SHCS	—	—	—	14	56
		CL-5/16-18X.62-SHCS	—	16	64	—	—
		CL-5/16-18X.75-SHCS	—	12	32	—	—
		CL-5/16-18X1.00-SHCS	—	—	—	4	4
		CL-5/16-18X1.50-SHCS	—	—	—	12	48
		CL-5/16-18X2.00-SHCS	—	—	—	16	32
		CL-5/16-18X3.50-SHCS	—	—	—	8	16
		CL-1/2-13X1.00-SHCS	8	8	32	—	—
		CL-1/2-13X1.25-SHCS	43	66	208	20	56
		CL-1/2-13X1.50-SHCS	43	62	208	20	56
		CL-1/2-13X1.75-SHCS	34	62	160	4	12
		CL-1/2-13X2.00-SHCS	6	38	120	6	20
		CL-1/2-13X2.25-SHCS	8	37	130	16	50
		CL-1/2-13X2.75-SHCS	8	17	60	14	26
		CL-1/2-13X4.50-SHCS	4	8	16	—	—
	HEAVY	CL-6-32X.50-SHCS	4	8	32	—	—
		CL-10-32X.50-SHCS	26	68	156	3	6
		CL-10-32X1.50-SHCS	—	—	—	4	16
		CL-1/4-20X.75-SHCS	4	8	32	—	—
		CL-1/4-20X2.00-SHCS	—	—	—	8	32
		CL-5/16-18X1.00-SHCS	—	—	—	4	8
		CL-5/16-18X2.50-SHCS	—	—	—	18	72
		CL-5/16-18X3.50-SHCS	—	—	—	8	16
		CL-3/8-16X4.00-SHCS	—	—	—	8	16
		CL-5/8-11X1.00-SHCS	—	—	—	4	16
		CL-5/8-11X1.25-SHCS	26	35	108	16	40
		CL-5/8-11X1.50-SHCS	40	59	188	4	16
		CL-5/8-11X2.00-SHCS	63	96	288	20	48
		CL-5/8-11X2.25-SHCS	6	16	48	2	4
		CL-5/8-11X2.50-SHCS	10	27	92	16	32
		CL-5/8-11X3.00-SHCS	6	26	86	6	12
		CL-5/8-11X5.00-SHCS	4	8	16	—	—
Spring Locating Pins	MINI	CL-7A-SLP-1	—	4	16	—	—
	STANDARD	—	—	—	—	—	—
	HEAVY	—	—	—	—	—	—
Spherical Nuts & Washers	MINI	CL-9-SNW	8	12	32	—	—
	STANDARD	CL-3-SNW	4	6	16	—	—
	HEAVY	CL-4-SNW	4	6	16	—	—
Push/Pull Toggle Clamps	MINI	—	—	—	—	—	—
	STANDARD	CL-350-SPC	—	3	8	—	—
	HEAVY	—	—	—	—	—	—
Clamp Springs	MINI	CL-6-SPG	16	24	64	—	—
	STANDARD	CL-9-SPG	8	12	32	—	—
	HEAVY	CL-11-SPG	8	12	32	—	—
Spring Stop Buttons	MINI	CL-10A-SSB	2	4	16	—	—
		CL-10C-SSB	2	4	16	—	—
	STANDARD	CL-10A-SSB	—	2	8	—	—
		CL-20A-SSB	—	2	8	—	—
		CL-30A-SSB	—	2	8	—	—
		CL-10C-SSB	2	2	8	—	—
		CL-20C-SSB	2	2	8	—	—
		CL-30C-SSB	2	2	8	—	—
	HEAVY	CL-10A-SSB	—	2	8	—	—
		CL-20A-SSB	—	2	8	—	—
		CL-30A-SSB	—	2	8	—	—
		CL-10C-SSB	2	2	8	—	—
		CL-20C-SSB	2	2	8	—	—
		CL-30C-SSB	2	2	8	—	—
Studs	MINI	CL-5/16-18X3.00-STUD	8	12	32	—	—
		CL-5/16-18X3.50-STUD	8	12	32	—	—
	STANDARD	CL-1/2-13X4.00-STUD	4	6	16	—	—
		CL-1/2-13X5.50-STUD	4	6	16	—	—
	HEAVY	CL-5/8-11X4.50-STUD	4	6	16	—	—
		CL-5/8-11X5.50-STUD	4	6	16	—	—

Knurled Check Nuts	MINI	CL-51618-TSJN	2	4	8	—	—
	STANDARD	CL-1213-TSJN	2	2	8	—	—
	HEAVY	CL-5811-TSJN	2	2	8	—	—
Vertical Toggle Clamps	MINI	CL-450-VTC	4	6	16	—	—
	STANDARD	CL-450-VTC	4	6	16	—	—
		CL-650-VTC	—	4	16	—	—
	HEAVY	—	—	—	—	—	—
Block Push Clamps	MINI	—	—	—	—	—	—
	STANDARD	CLR-100-BC	—	—	—	3	12
	HEAVY	CLR-300-BC	—	—	—	3	12
Contact Bolts	MINI	—	—	—	—	—	—
	STANDARD	CLR-109-CB	—	—	—	4	12
		CLR-400-CB	—	—	—	3	12
		CLR-405-CB	—	—	—	4	12
	HEAVY	CLR-402-CB	—	—	—	3	12
		CLR-405-CB	—	—	—	2	4
Edge Clamps	MINI	—	—	—	—	—	—
	STANDARD	CLR-110-EC	—	—	—	3	12
	HEAVY	CLR-310-EC	—	—	—	3	12
	MINI	—	—	—	—	—	—
	STANDARD	CLR-720-EX	—	—	—	4	8
		CLR-720-EX	—	—	—	4	8
Distribution Manifolds	MINI	—	—	—	—	—	—
	STANDARD	CLR-104-F	—	—	—	1	4
		CLR-106-F	—	—	—	1	4
	HEAVY	CLR-104-F	—	—	—	1	4
		CLR-106-F	—	—	—	1	4
Fittings	MINI	—	—	—	—	—	—
	STANDARD	CLR-200-F	—	—	—	1	4
		CLR-202-F	—	—	—	1	4
		CLR-301-F	—	—	—	2	8
		CLR-303-F	—	—	—	4	16
		CLR-304-F	—	—	—	2	8
		CLR-402-F	—	—	—	6	24
		CLR-403-F	—	—	—	4	16
		CLR-404-F	—	—	—	4	16
		CLR-501-F	—	—	—	4	16
		CLR-814-F	—	—	—	6	24
	HEAVY	CLR-200-F	—	—	—	1	4
		CLR-202-F	—	—	—	1	4
		CLR-301-F	—	—	—	2	8
		CLR-303-F	—	—	—	4	16
		CLR-304-F	—	—	—	2	8
		CLR-402-F	—	—	—	6	24
		CLR-403-F	—	—	—	4	16
		CLR-404-F	—	—	—	4	16
		CLR-501-F	—	—	—	4	16
		CLR-814-F	—	—	—	6	24
Fixture Hose	MINI	—	—	—	—	—	—
	STANDARD	CLR-9-FH	—	—	—	3	12
		CLR-12-FH	—	—	—	3	12
		CLR-15-FH	—	—	—	3	12
		CLR-18-FH	—	—	—	3	12
		CLR-24-FH	—	—	—	3	12
	HEAVY	CLR-9-FH	—	—	—	3	12
		CLR-12-FH	—	—	—	3	12
		CLR-15-FH	—	—	—	3	12
		CLR-18-FH	—	—	—	3	12
		CLR-24-FH	—	—	—	3	12
Hydraulic Fluid	MINI	—	—	—	—	—	—
	STANDARD	CLR-2-FL	—	—	—	2	2
	HEAVY	CLR-2-FL	—	—	—	2	2
Gauges	MINI	—	—	—	—	—	—
	STANDARD	CLR-102-GA	—	—	—	1	4
	HEAVY	CLR-102-GA	—	—	—	1	4
Heavy-Duty Hose	MINI	—	—	—	—	—	—
	STANDARD	CLR-72-H	—	—	—	1	4
	HEAVY	CLR-72-H	—	—	—	1	4
Pallet Decouplers	MINI	—	—	—	—	—	—
	STANDARD	CLR-9425-012-PD	—	—	—	1	4
	HEAVY	CLR-9425-012-PD	—	—	—	1	4
Swing Clamps	MINI	—	—	—	—	—	—
	STANDARD	CLR-311-SC	—	—	—	4	8
		CLR-321-SC	—	—	—	4	8
	HEAVY	CLR-511-SC	—	—	—	4	8
		CLR-521-SC	—	—	—	4	8
Sequence Valves	MINI	—	—	—	—	—	—
	STANDARD	CLR-440-V	—	—	—	2	8
	HEAVY	CLR-440-V	—	—	—	2	8
Work Supports	MINI	—	—	—	—	—	—
	STANDARD	CLR-121-WS	—	—	—	2	2
		CLR-201-WS	—	—	—	4	12
		CLR-410-WS	—	—	—	2	8
	HEAVY	CLR-121-WS	—	—	—	2	4

Carr Lane MANUFACTURING CO.
4200 Carr Lane Ct., P.O. Box 191970
St. Louis, Missouri 63119-7970 USA
Phone: 314-647-6200, FAX: 314-647-5736
Web Site: www.carrlane.com

(Rev. 3-07)

RECTANGULAR TOOLING PLATES

GRAY CAST IRON, ASTM CLASS 40

12x16

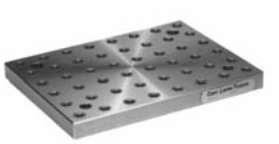

Standard

16x20

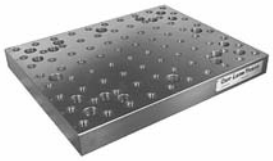

Standard Heavy

20x24

Standard Heavy

24x32

Standard Heavy

Ideal tooling plate for most milling machines. Finish ground to tight tolerances, with all multipurpose holes located within .0008 inches of true position. Available in a full range of standard fixture sizes, with mounting holes to fit almost any USA or metric slot spacing. See page 6 for mounting information. Plates can be accurately connected to create many length and width combinations. Also available as blanks, without multipurpose holes (page 261 of tooling-component catalog section).

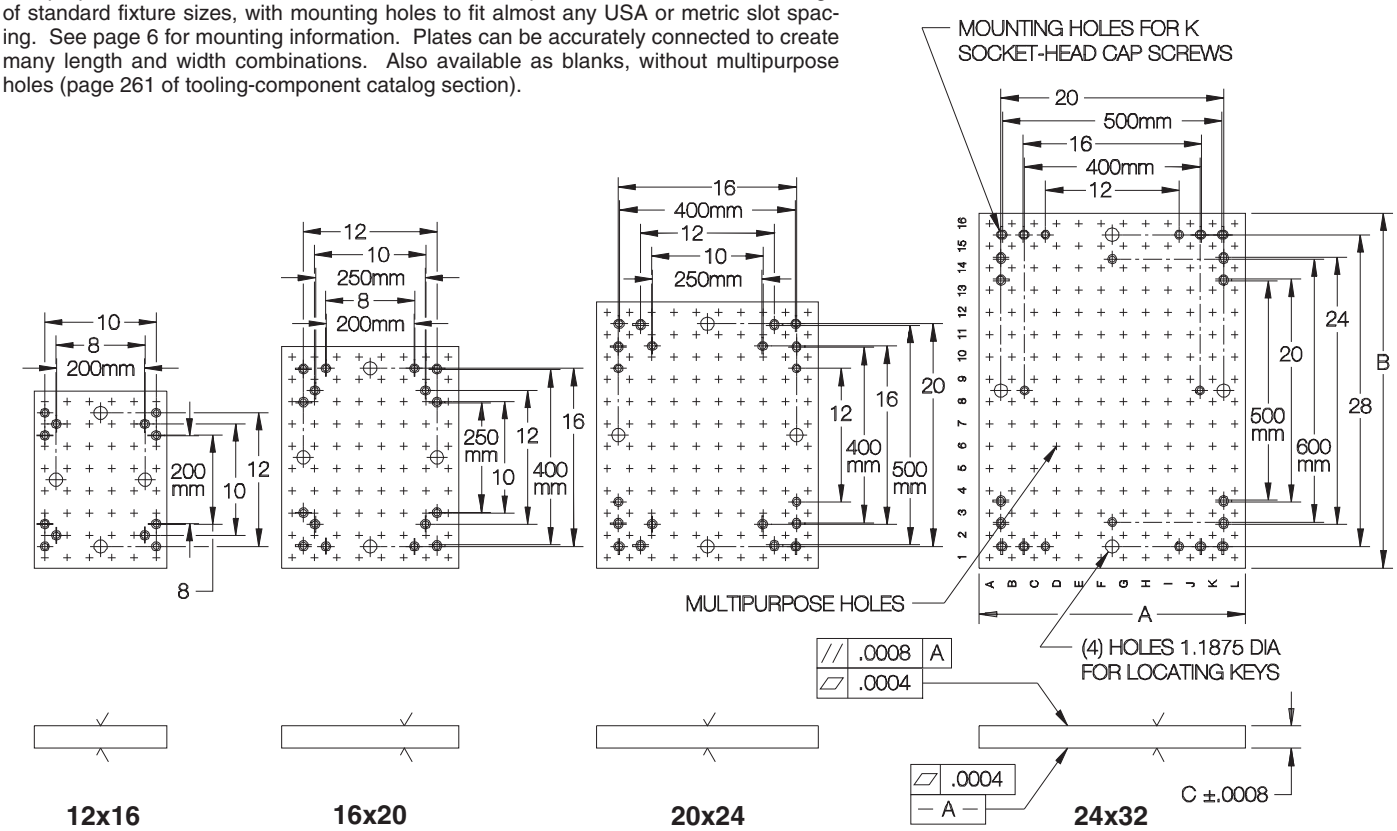

REGULAR

SIZE	PART NO.	MULTIPURPOSE HOLES THREAD	ID	SPACING	PATTERN	A NOMINAL	A ACTUAL	B NOMINAL	B ACTUAL	C	K	NO. OF MOUNTING SCREWS REQUIRED	APPROX WEIGHT (LBS)
STANDARD	CL-MF40-0110	1/2-13	.5000	2.0000	6x8	12	11.875	16	15.875	2.0000	1/2-13 or M12	4	88
	CL-MF40-0111				8x10	16	15.875	20	19.875				145
	CL-MF40-0112				10x12	20	19.875	24	23.875				220
	CL-MF40-0113				12x16	24	23.875	32	31.875			6	360
HEAVY	CL-MF50-0111	5/8-11	.6250	2.0000	8x10	16	15.875	20	19.875	2.0000	5/8-11 or M16	4	140
	CL-MF50-0112				10x12	20	19.875	24	23.875				215
	CL-MF50-0113				12x16	24	23.875	32	31.875			6	345

Carr Lane MANUFACTURING CO.
4200 Carr Lane Ct., P.O. Box 191970
St. Louis, Missouri 63119-7970 USA
Phone: 314-647-6200, FAX: 314-647-5736
Web Site: www.carrlane.com

(Rev. 3-07)

RECTANGULAR TOOLING PLATES

GRAY CAST IRON, ASTM CLASS 40

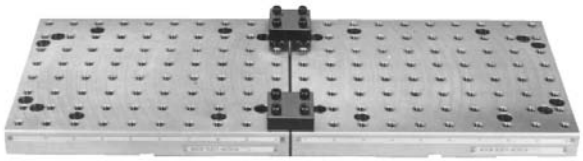

For large machine tables, connect two or more plates to form a single baseplate, using Locating Gages (page 33) as shown above to maintain accuracy. Gages are removed once plates are fastened to the machine table.

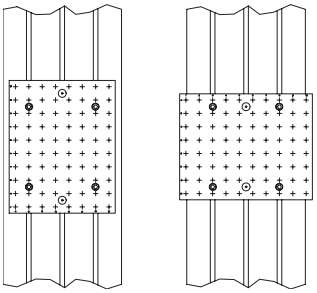

Two sets of Locating-Key holes allow mounting plates either lengthwise or widthwise on a machine table.

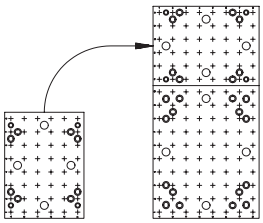

The length of each Rectangular Tooling Plate is the same as the width of the next-larger size, allowing many possible combinations by turning plates 90°.

12x20

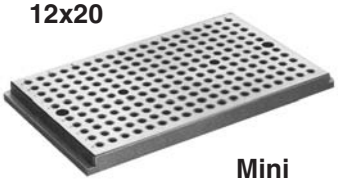

Mini (Extra Long)

16x24

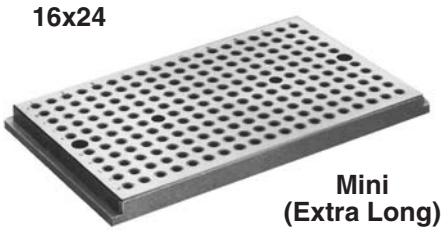

Mini (Extra Long)

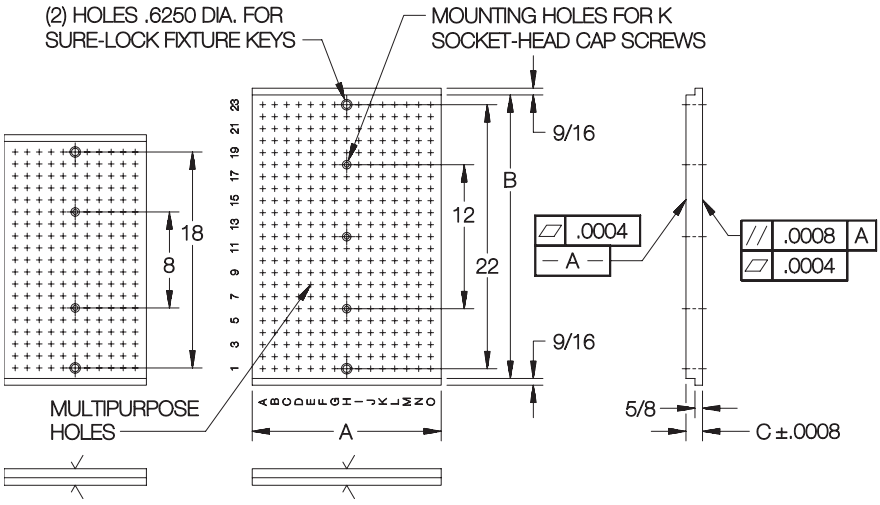

Extra-long Rectangular Tooling Plate that mounts lengthwise on a machine table (mini size only). Finish ground to tight tolerances, with all multipurpose holes spaced within .0004 of true position. See page 6 for mounting information.

EXTRA LONG

SIZE	PART NO.	MULTIPURPOSE HOLES				A		B		C	K	NO. OF MOUNTING SCREWS REQUIRED	APPROX WEIGHT (LBS)
		THREAD	ID	SPACING	PATTERN	NOMINAL	ACTUAL	NOMINAL	ACTUAL				
MINI	CL-MF25-0151	5/16-18	.5000	1.0000	11x19	12	11.875	20	19.750	1.3750	3/8-16	2	79
	CL-MF25-0152				15x23	16	15.750	24	23.625	1.5000	or M10	3	140

Carr Lane®
MANUFACTURING CO.
4200 Carr Lane Ct., P.O. Box 191970
St. Louis, Missouri 63119-7970 USA
Phone: 314-647-6200, FAX: 314-647-5736
Web Site: www.carrlane.com

(Rev. 10-07)

ROUND TOOLING PLATES

GRAY CAST IRON, ASTM CLASS 40

400mm

Standard

500mm

Standard
Heavy

600mm

Heavy

Round tooling plates are perfect for rotary or indexing machine tables. Finish ground to tight tolerances, with all multipurpose holes spaced within .0008 inches of true position. Locate on machine table using Locating Keys, like a Rectangular Tooling Plate.

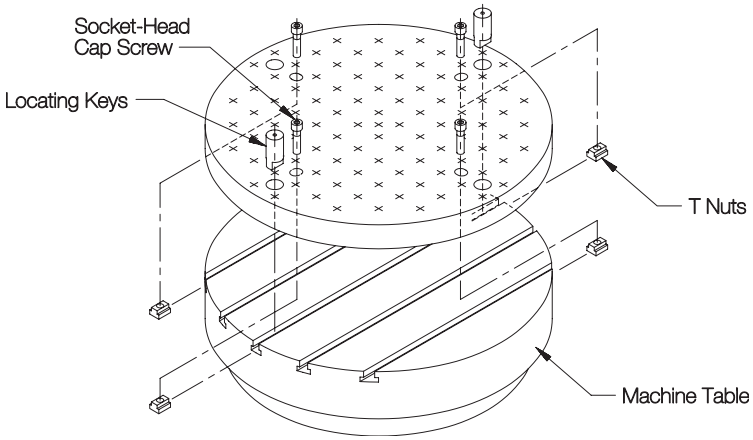

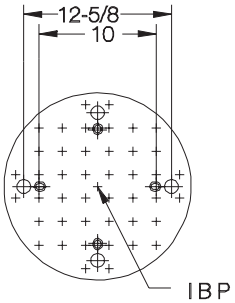

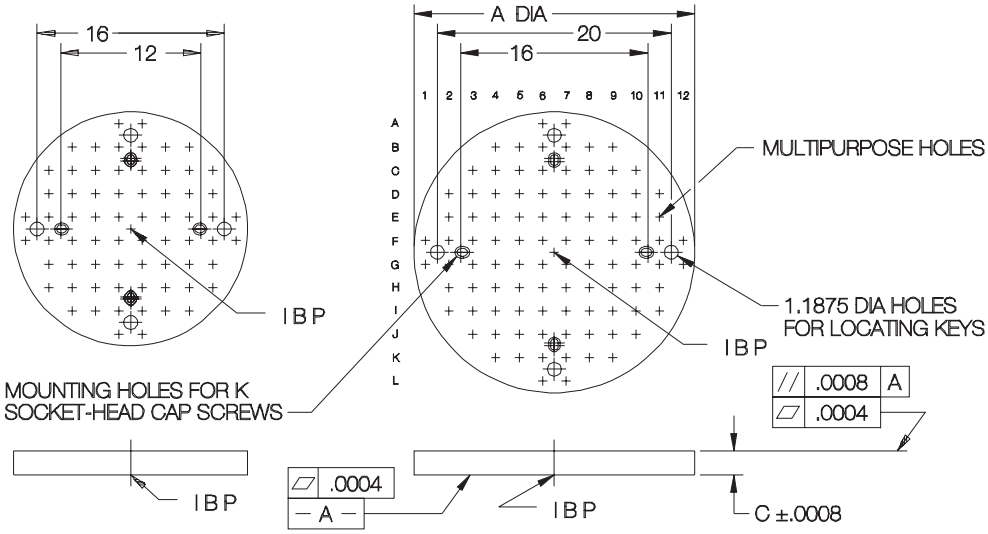

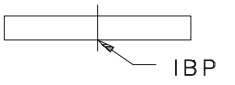

400mm

500mm

600mm

SIZE	PART NO.	MULTIPURPOSE HOLES				A DIA		C	K	APPROX WEIGHT (LBS)
		THREAD	ID	SPACING	PATTERN	NOMINAL	ACTUAL			
STANDARD	CL-MF40-0311	1/2-13	.5000	2.0000	8x8	400mm	15.75	2.0000	1/2-13 or M12	92
	CL-MF40-0312				10x10	500mm	19.69		5/8-11 or M16	145
HEAVY	CL-MF50-0312	5/8-11	.6250	2.0000	10x10	500mm	19.69	2.0000	5/8-11 or M16	141
	CL-MF50-0313				12x12	600mm	23.62			205

MANUFACTURING CO.
4200 Carr Lane Ct., P.O. Box 191970
St. Louis, Missouri 63119-7970 USA
Phone: 314-647-6200, FAX: 314-647-5736
Web Site: www.carrlane.com

(Rev. 3-07)

SQUARE PALLET TOOLING PLATES

GRAY CAST IRON, ASTM CLASS 40

300mm**

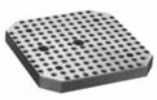

Mini

400mm

Mini Standard

500mm

Mini Standard Heavy

630mm

Standard Heavy

800mm

Standard* Heavy

Ideal tooling plate for machining-center pallets. Finish ground to tight tolerances. Available in a full range of standard pallet sizes, with mounting holes to fit almost any USA or metric slot spacing. Dual mounting capability allows both JIS mounting (locating from two reference edges) and DIN mounting (locating from center and radial holes) with excellent accuracy. See page 7 for mounting information. Also available as blanks, without multipurpose holes (page 263 of tooling-component catalog section).

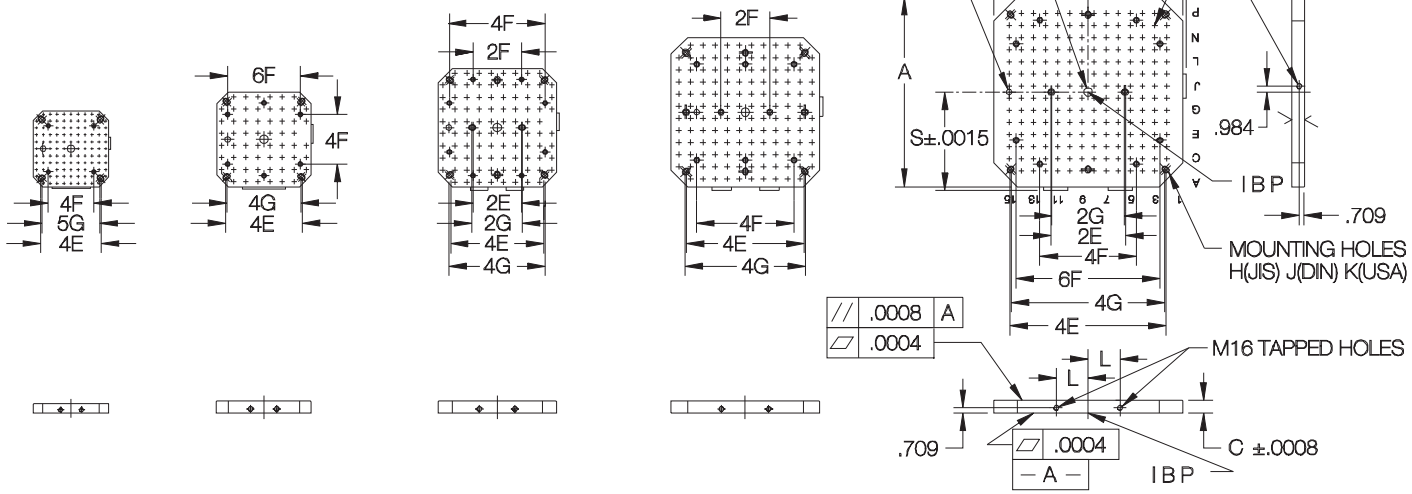

300mm** **400mm** **500mm** **630mm** **800mm**

SIZE	PART NO.	MULTIPURPOSE HOLES THREAD	ID	SPACING	PATTERN	A NOMINAL	ACTUAL	C	E (JIS)	F (DIN)	G (USA)	H (JIS)	J (DIN)	K (USA)	L	N DIA	P DIA	S	APPROX. WEIGHT (LBS)
MINI	CL-MF25-0800	5/16-18	.5000	1.0000	11x11	300mm	11.81	1.3750	63mm	50mm	50mm	M16	M10	5/8-11 or M16	1.969	25mm	20mm	6.2992	51
	CL-MF25-0801				15x15	400mm	15.20	1.5000	80mm	50mm	3.000		M12		2.165			7.8740	79
	CL-MF25-0802				19x19	500mm	19.13		100mm	100mm	4.000				2.953			9.8425	130
STANDARD	CL-MF40-0801	1/2-13	.5000	2.0000	8x8	400mm	15.20	2.0000	80mm	50mm	3.000	M16	M12	5/8-11 or M16	2.165	30mm	20mm	7.8740	115
	CL-MF40-0802				10x10	500mm	19.13		100mm	100mm	4.000				2.953			9.8425	180
	CL-MF40-0803				12x12	630mm	24.25	2.0000	125mm	100mm	5.000		M16		3.937		25mm	12.4016	290
	CL-MF40-0804*				14x14	800mm	30.94	2.3750	160mm		6.000				5.315			15.7480	560
HEAVY	CL-MF50-0822	5/8-11	.6250	2.0000	10x10	500mm	19.13	2.0000	100mm	100mm	4.000	M16	M12	5/8-11 or M16	2.953	30mm	20mm	9.8425	175
	CL-MF50-0823				12x12	630mm	24.25	2.0000	125mm		5.000		M16		3.937		25mm	12.4016	280
	CL-MF50-0824				14x14	800mm	30.94	2.3750	160mm		6.000				5.315			15.7480	540

* Limited-production item — please contact factory for delivery leadtime.

** 300mm size also fits 320mm pallets with the 10mm-thick edge pads furnished.

Carr Lane®
MANUFACTURING CO.
4200 Carr Lane Ct., P.O. Box 191970
St. Louis, Missouri 63119-7970 USA
Phone: 314-647-6200, FAX: 314-647-5736
Web Site: www.carrlane.com

(Rev. 3-07)

RECTANGULAR PALLET TOOLING PLATES

GRAY CAST IRON, ASTM CLASS 40

300x400mm**

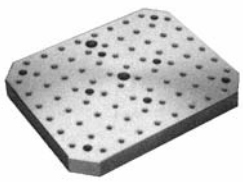

Mini*

400x500mm

Mini*
Standard*

500x630mm

Standard*

630x800mm

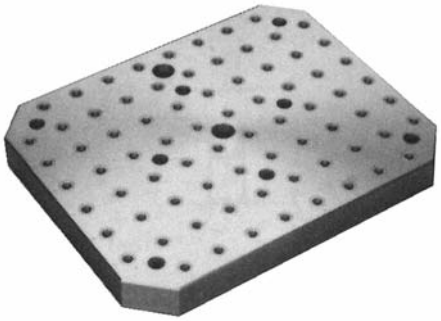

Standard*

Tooling plate for rectangular machining-center pallets. Finish ground to tight tolerances, with all multipurpose holes spaced within .0008 inches of true position (.0004 for mini). Available in a full range of standard pallet sizes, with mounting holes to fit almost any USA or metric slot spacing. Dual mounting capability allows both JIS mounting (locating from two reference edges) and DIN mounting (locating from center and radial holes) with excellent accuracy. See page 7 for mounting information. Also available as blanks, without multipurpose holes (page 264 of tooling-component catalog section).

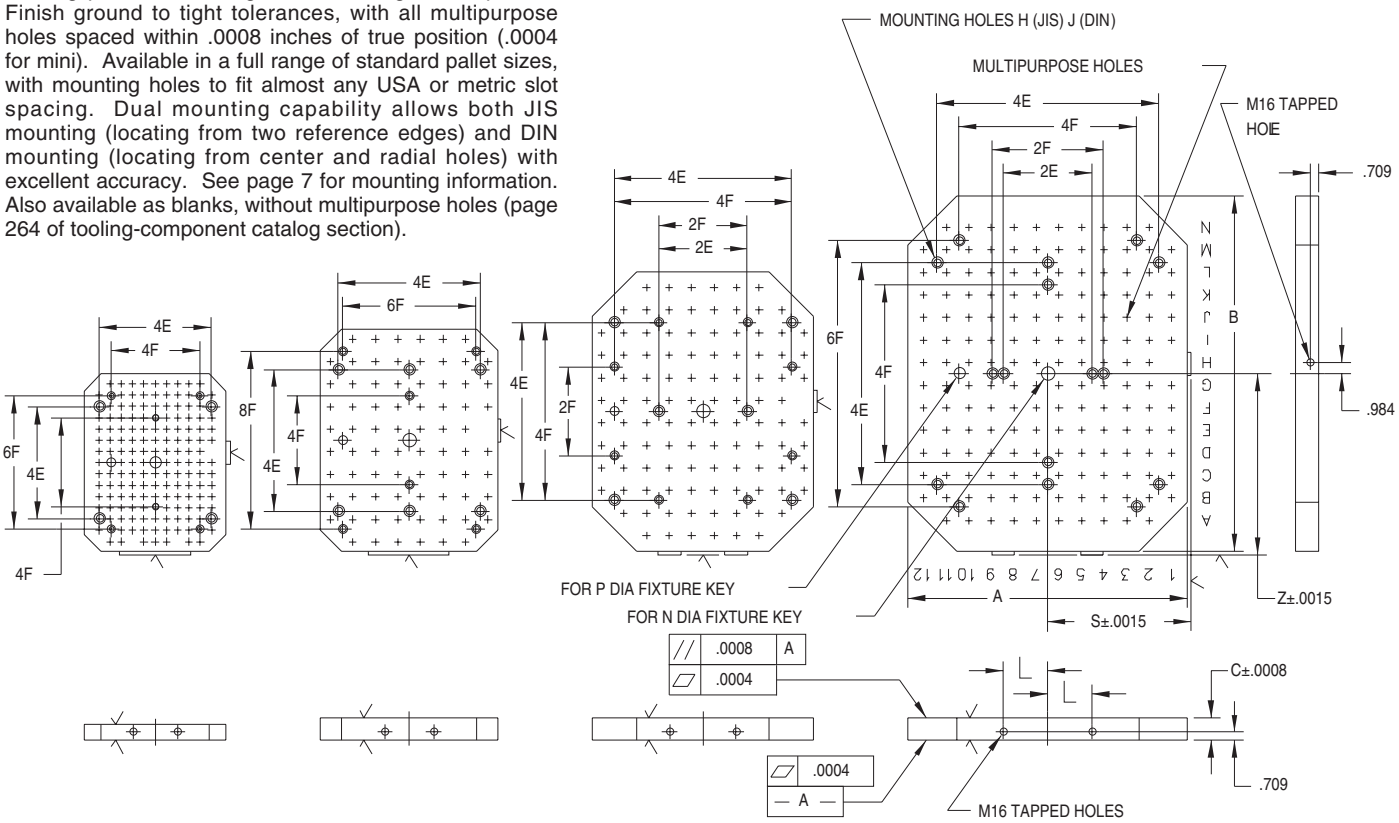

300x400mm** **400x500mm** **500x630mm** **630x800mm**

SIZE	PART NO.	MULTIPURPOSE HOLES THREAD	ID	SPACING	PATTERN	A NOMINAL	A ACTUAL	B NOMINAL	B ACTUAL	C	E (JIS)	F (DIN)	H (JIS)	J (DIN)	L	N DIA	P DIA	S	Z	APPROX WEIGHT (LBS)
MINI	CL-MF25-0850*	5/16-18	.5000	1.0000	11x15	300mm	11.81	400mm	15.20	1.3750	63mm	50mm	M16	M10	1.969	25mm	20mm	6.2992	7.8740	46
	CL-MF25-0851*				15x19	400mm	15.20	500mm	19.13	1.5000	80mm			M12	2.165			7.8740	9.8425	110
STANDARD	CL-MF40-0851*	1/2-13	.5000	2.0000	8x10	400mm	15.20	500mm	19.13	2.0000	80mm	50mm	M16	M12	2.165	30mm	20mm	7.8740	9.8425	150
	CL-MF40-0852*				10x12	500mm	19.13	630mm	24.25		100mm	100mm			2.953			9.8425	12.4016	235
	CL-MF40-0853*				12x14	630mm	24.25	800mm	30.94		125mm	100mm		M16	3.937		25mm	12.4016	15.7480	385

*Limited-production item — please contact factory for delivery leadtime.
**300mm size also fits 320mm pallets with the 10mm-thick edge pads furnished.

Carr Lane®
MANUFACTURING CO.
4200 Carr Lane Ct., P.O. Box 191970
St. Louis, Missouri 63119-7970 USA
Phone: 314-647-6200, FAX: 314-647-5736
Web Site: www.carrlane.com

(Rev. 12-04)

PLATFORM TOOLING PLATES

GRAY CAST IRON, ASTM CLASS 45

500mm

Standard
Heavy*

630mm

Standard
Heavy

800mm

Standard*
Heavy

Raised tooling plate for machining-center pallets. Allows tool access to low workpieces below minimum spindle height on horizontal machining centers. Top and bottom surfaces are finish ground to tight tolerances. All multipurpose holes are spaced within .0008 inches of true position. Available in the three largest pallet sizes, with mounting holes to fit almost any USA or metric slot spacing. Incorporates JIS mounting (locating from two reference edges) … see page 7 for mounting information.

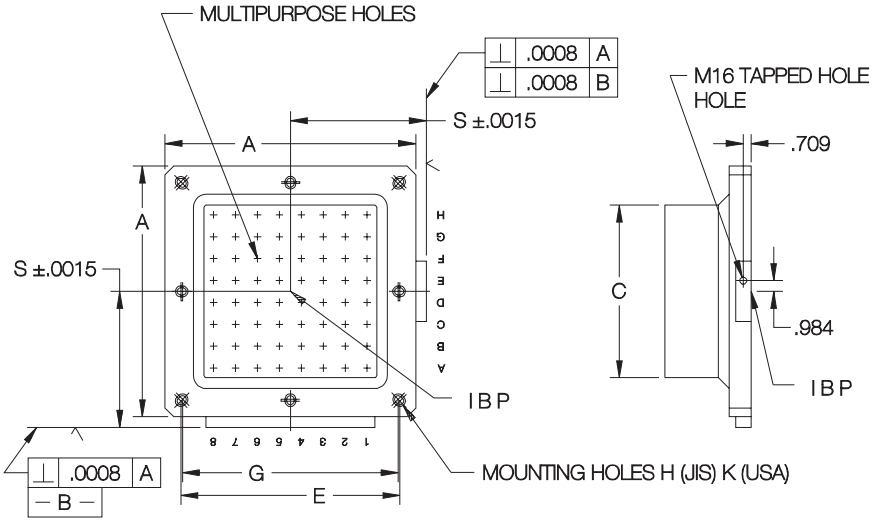

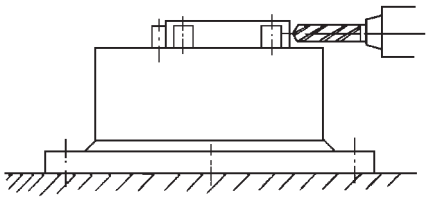

SIZE	PART NO.	MULTIPURPOSE HOLES THREAD	ID	SPACING	PATTERN	A NOMINAL	A ACTUAL	B	C	E (JIS)	G (USA)	H (JIS)	K (USA)	L	S	T	APPROX WEIGHT (LBS)
STANDARD	CL-MF40-0832	1/2-13	.5000	2.0000	6x6	500mm	17.75	7.8750	11.81	400mm	16	M16	5/8-11 or M16	2.953	9.8425	1.75	265
	CL-MF40-0833				8x8	630mm	22.88		15.75	500mm	20			3.937	12.4016	2.00	365
	CL-MF40-0834*				10x10	800mm	29.12		19.69	640mm	24			5.315	15.7480	2.19	600
HEAVY	CL-MF50-0832*	5/8-11	.6250	2.0000	6x6	500mm	17.75	7.8750	11.81	400mm	16	M16	5/8-11 or M16	2.953	9.8425	1.75	260
	CL-MF50-0833				8x8	630mm	22.88		15.75	500mm	20			3.937	12.4016	2.00	360
	CL-MF50-0834				10x10	800mm	29.12		19.69	640mm	24			5.315	15.7480	2.19	590

* Limited-production item — please contact factory for delivery leadtime.

MANUFACTURING CO.
4200 Carr Lane Ct., P.O. Box 191970
St. Louis, Missouri 63119-7970 USA
Phone: 314-647-6200, FAX: 314-647-5736
Web Site: www.carrlane.com

(Rev. 12-04)

ANGLE TOOLING PLATES

GRAY CAST IRON, ASTM CLASS 45

400mm

Standard

500mm

Standard

630mm

Standard
Heavy

800mm

Standard*
Heavy

Precision angle plate for machining-center pallets. Large working face is accurately finish ground to tight tolerances, and qualified to the base. All multipurpose holes are spaced within .0008 inches of true position. Gussetted back provides excellent strength and rigidity while keeping weight to a minimum. One-piece cast construction provides superior accuracy, dimensional stability, and vibration dampening. Available in a full range of standard pallet sizes, with mounting holes to fit almost any USA or metric slot spacing. Dual mounting capability allows both JIS mounting (locating from two reference edges) and DIN mounting (locating from center and radial holes) with excellent accuracy. See page 7 for mounting information. Also available as blanks, without multipurpose holes (page 253 of tooling-component catalog section).

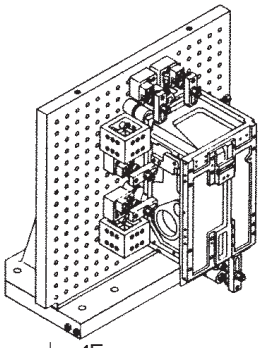

These vertical plates are ideal for extremely large parts.

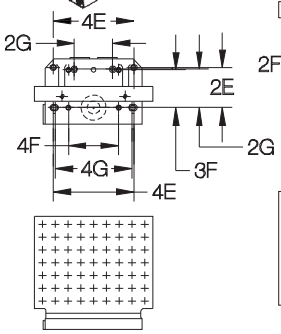

400mm **500mm**

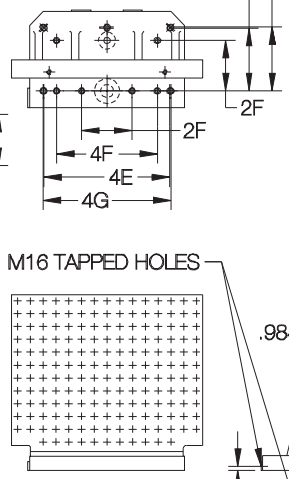

630mm

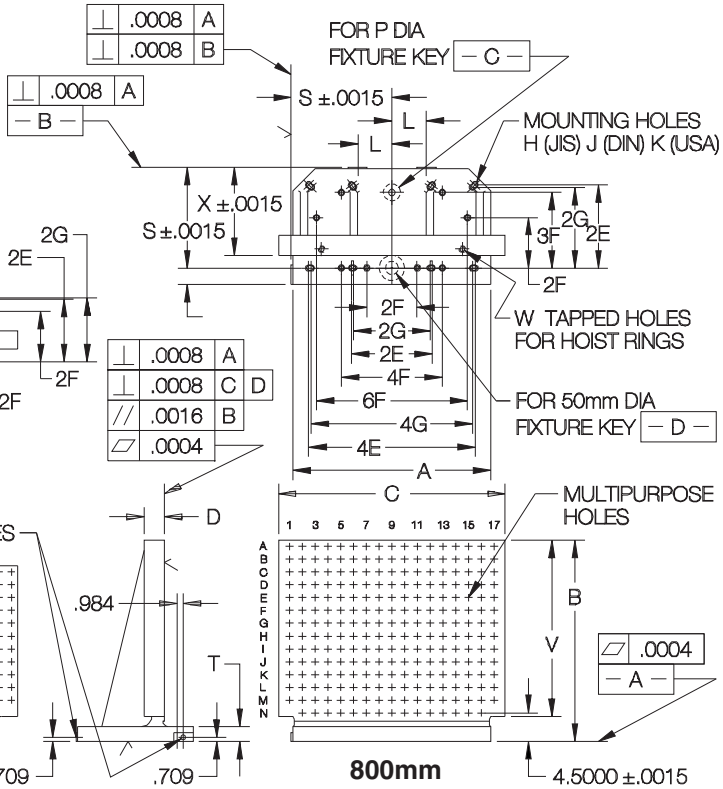

800mm

SIZE	PART NO.	MULTIPURPOSE HOLES THREAD	ID	SPACING	PATTERN	A NOMINAL	A ACTUAL	B	C	D	E (JIS)	F (DIN)	G (USA)	H (JIS)	J (DIN)	K (USA)	L	P DIA	S	T	V	W	X	APPROX WEIGHT (LBS)
STANDARD	CL-MF40-0451	1/2-13	.5000	2.0000	9x7	400mm	15.20	17.72	18.50	2.36	80mm	50mm	3.000	M16	M12	5/8-11 or M16	2.165	20mm	7.8740	1.77	14.39	5/8-11	6.8898	210
	CL-MF40-0452				11x9	500mm	19.13	21.65	22.83	2.56	100mm	100mm	4.000				2.953		9.8425	1.97	17.88		8.8583	345
	CL-MF40-0453				15x12	630mm	24.25	27.56	29.92	2.95	125mm	100mm	5.000		M16		3.937	25mm	12.4016	2.17	23.60	3/4-10	10.4331	665
	CL-MF40-0454*				17x14	800mm	30.94	31.50	35.43	3.15	160mm		6.000				5.315		15.7480	2.36	27.55	1-8	13.7795	1000
HEAVY	CL-MF50-0453	5/8-11	.6250	2.0000	15x12	630mm	24.25	27.56	29.92	2.95	125mm	100mm	5.000	M16	M16	5/8-11 or M16	3.937	25mm	12.4016	2.17	23.60	3/4-10	10.4331	655
	CL-MF50-0454				17x14	800mm	30.94	31.50	35.43	3.15	160mm		6.000				5.315		15.7480	2.36	27.55	1-8	13.7795	990

* Limited-production item — please contact factory for delivery leadtime.

Carr Lane®
MANUFACTURING CO.
4200 Carr Lane Ct., P.O. Box 191970
St. Louis, Missouri 63119-7970 USA
Phone: 314-647-6200, FAX: 314-647-5736
Web Site: www.carrlane.com

(Rev. 10-07)

TWO-SIDED TOOLING BLOCKS

GRAY CAST IRON, ASTM CLASS 45

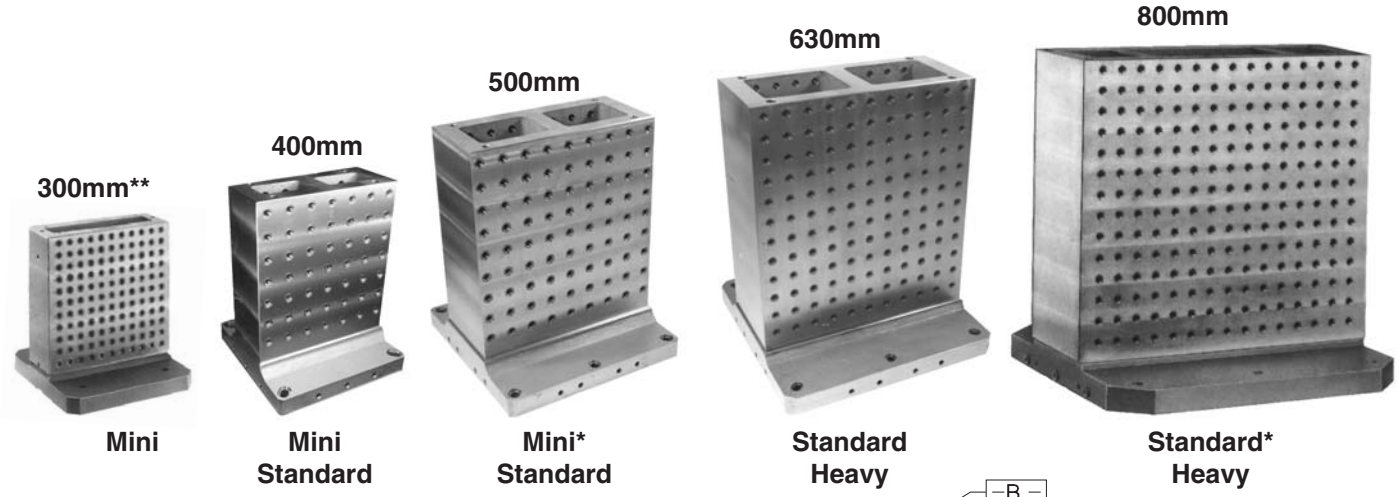

Precision tooling block for machining-center pallets. Both faces are accurately finish ground to tight tolerances, and qualified to the base. All multipurpose holes are spaced within .0008 inches of true position (.0004 for mini). One-piece cast construction provides superior accuracy, dimensional stability, and vibration dampening. Available in a full range of standard pallet sizes, with mounting holes to fit almost any USA or metric slot spacing. Dual mounting capability allows both JIS mounting (locating from two reference edges) and DIN mounting (locating from center and radial holes) with excellent accuracy. See page 7 for mounting information. Also available as blanks, without multipurpose holes.

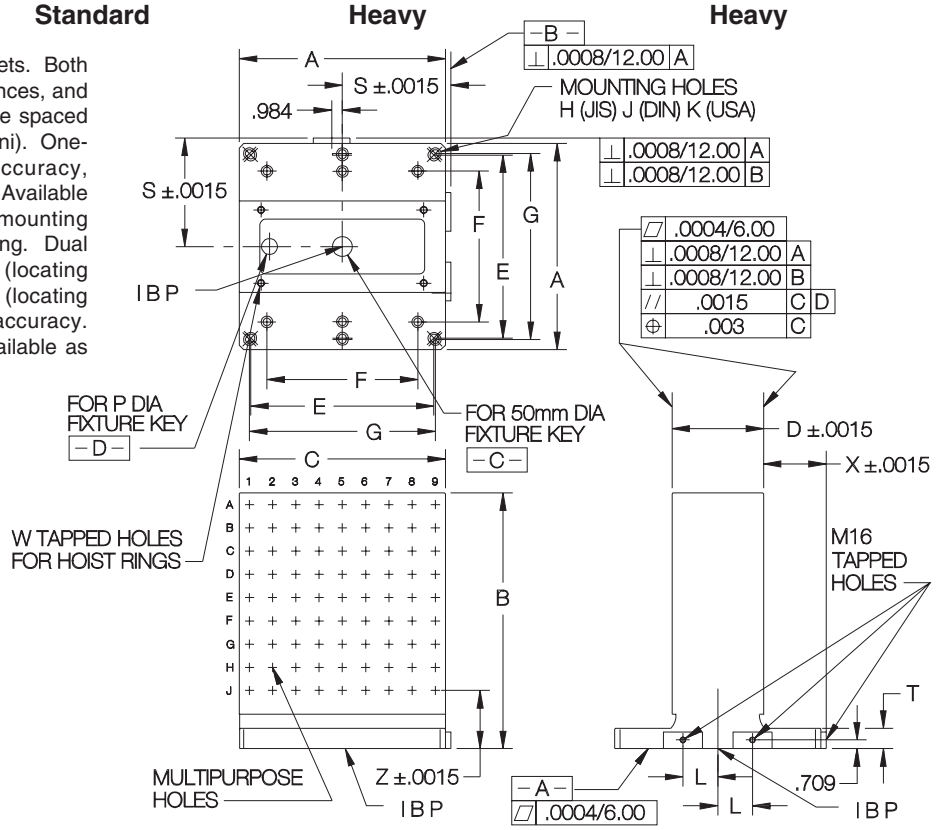

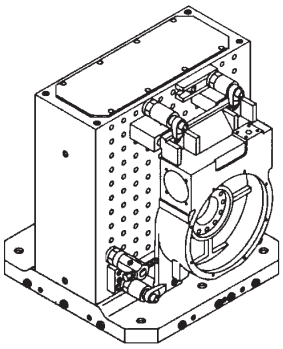

These tooling blocks have two identical wide faces to allow fixturing large parts.

SIZE	PART NO.	MULTIPURPOSE HOLES THREAD	ID	SPACING	PATTERN	A NOMINAL	ACTUAL	B	C	D	E (JIS)	F (DIN)	G (USA)	H (JIS)	J (DIN)	K (USA)	L	P DIA	S	T	W	X	Z	APPROX WEIGHT (LBS)
MINI	CL-MF25-0600	5/16-18	.5000	1.0000	11x11	300mm	11.81	13.19	11.81	3.9370	252mm	200mm	250mm	M16	M10	5/8-11 or M16	1.969	20mm	6.2992	1.38	3/8-16	4.3307	2.7500	120
	CL-MF25-0601				15x14	400mm	15.20	17.72	15.75	5.9055	320mm	200&300mm	12		M12		2.165		7.8740	1.97	5/8-11	4.9213	4.0000	290
	CL-MF25-0602*				19x18	500mm	19.13	21.65	19.69	7.8740	400mm	200&400mm	16				2.953		9.8425			5.9055		470
STANDARD	CL-MF40-0611	1/2-13	.5000	2.0000	7x7	400mm	15.20	17.72	15.75	5.8750	320mm	200&300mm	12	M16	M12	5/8-11 or M16	2.165	20mm	7.8740	1.97	5/8-11	4.9365	5.0000	340
	CL-MF40-0612				9x9	500mm	19.13	21.65	19.69	7.8750	400mm	200&400mm	16				2.953		9.8425			5.9050		560
	CL-MF40-0613				11x11	630mm	24.25	27.56	24.80	9.8750	500mm	400mm	20		M16		3.937	25mm	12.4016	2.17	3/4-10	7.4641	5.0000	1040
	CL-MF40-0614*				15x14	800mm	30.94	31.50	31.50	11.8110	640mm	400&600mm	24				5.315		15.7480	2.36	1-8	9.8425	4.5000	1500
HEAVY	CL-MF50-0603	5/8-11	.6250	2.0000	11x11	630mm	24.25	27.56	24.80	9.8425	500mm	400mm	20	M16	M16	5/8-11 or M16	3.937	25mm	12.4016	2.17	3/4-10	7.4803	5.0000	1020
	CL-MF50-0604				15x14	800mm	30.94	31.50	31.50	11.8110	640mm	400&600mm	24				5.315		15.7480	2.36	1-8	9.8425	4.5000	1480

* Limited-production item — please contact factory for delivery leadtime.

** 300mm size also fits 320mm pallets with the 10mm-thick edge pads furnished.

Carr Lane MANUFACTURING CO.
4200 Carr Lane Ct., P.O. Box 191970
St. Louis, Missouri 63119-7970 USA
Phone: 314-647-6200, FAX: 314-647-5736
Web Site: www.carrlane.com

(Rev. 10-07)

FOUR-SIDED TOOLING BLOCKS

GRAY CAST IRON, ASTM CLASS 45

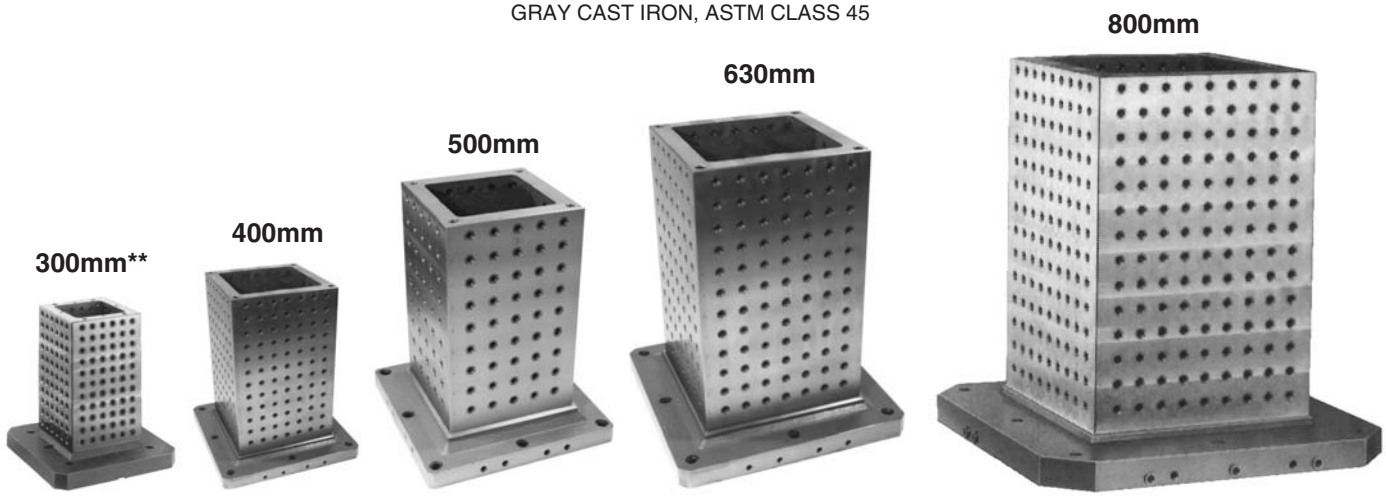

Mini | **Mini Standard** | **Mini* Standard** | **Standard Heavy** | **Standard* Heavy**

Precision four-sided tooling block for machining-center pallets. All four faces are accurately finish ground to tight tolerances, and qualified to the base. All multipurpose holes are spaced within .0008 inches of true position (.0004 for mini). One-piece cast construction provides superior accuracy, dimensional stability, and vibration dampening. Available in a full range of standard pallet sizes, with mounting holes to fit almost any USA or metric slot spacing. Dual mounting capability allows both JIS mounting (locating from two reference edges) and DIN mounting (locating from center and radial holes) with excellent accuracy. See page 7 for mounting information. Also available as blanks, without multipurpose holes.

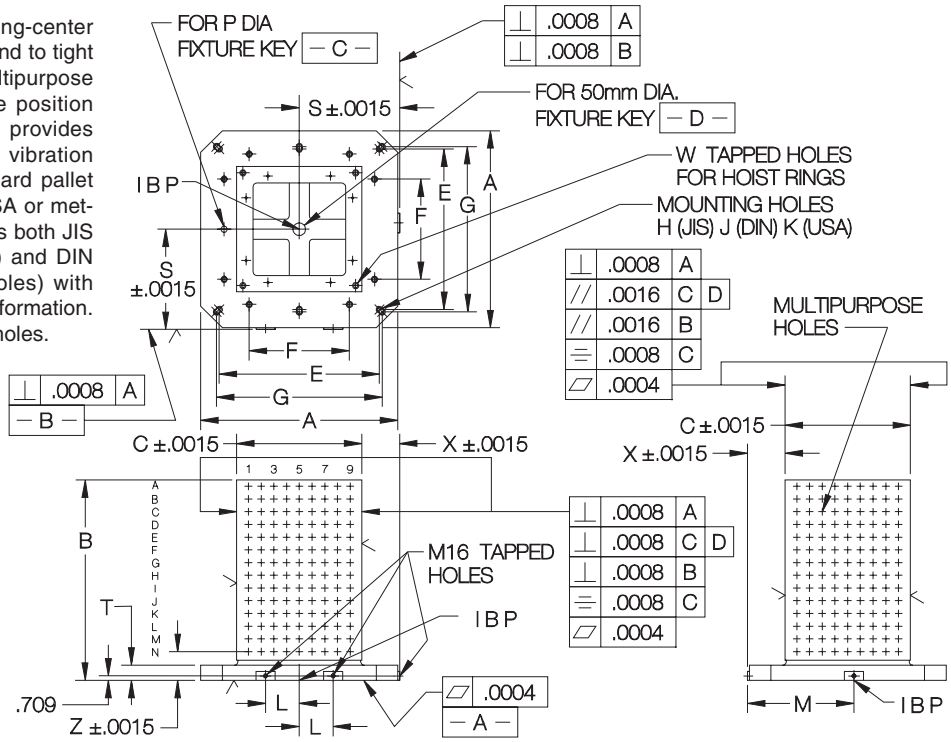

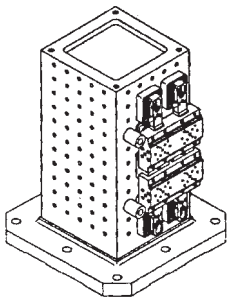

With four identical faces, these tooling blocks are ideal for loading a large number of medium-size parts on a pallet.

SIZE	PART NO.	MULTIPURPOSE HOLES THREAD	ID	SPACING	PATTERN	A NOMINAL	A ACTUAL	B	C	E (JIS)	F (DIN)	G (USA)	H (JIS)	J (DIN)	K (USA)	L	P DIA	S	T	W	X	Z	APPROX WEIGHT (LBS)
MINI	CL-MF25-0700	5/16-18	.5000	1.0000	5x11	300mm	11.81	13.19	6.8898	252mm	200mm	250mm	M16	M10	5/8-11 or M16	1.969	20mm	6.2992	1.38	3/8-16	2.8543	2.7500	120
	CL-MF25-0711				8x14	400mm	15.20	17.72	9.8425	320mm	200&300mm	12		M12		2.165		7.8740	1.97	5/8-11	2.9528	4.0000	265
	CL-MF25-0702*				10x18	500mm	19.13	21.65	11.8110	400mm	200&400mm	16				2.953		9.8425			3.9370		515
STANDARD	CL-MF40-0711	1/2-13	.5000	2.0000	4x7	400mm	15.20	17.72	9.8425	320mm	200&300mm	12	M16	M12	5/8-11 or M16	2.165	20mm	7.8740	1.97	5/8-11	2.9528	5.0000	325
	CL-MF40-0712				5x9	500mm	19.13	21.65	11.8125	400mm	200&400mm	16				2.953		9.8425			3.9363		515
	CL-MF40-0713				7x11	630mm	24.25	27.56	15.7500	500mm	400&600mm	20		M16		3.937	25mm	12.4016	2.17	3/4-10	4.5266	5.0000	875
	CL-MF40-0714*				9x14	800mm	30.94	31.50	19.6850	640mm	400&600mm	24				5.315		15.7480	2.36	1-8	5.9055	4.5000	1380
HEAVY	CL-MF50-0703	5/8-11	.6250	2.0000	7x11	630mm	24.25	27.56	15.7480	500mm	400&600mm	20	M16	M16	5/8-11 or M16	3.937	25mm	12.4016	2.17	3/4-10	4.5276	5.0000	870
	CL-MF50-0704				9x14	800mm	30.94	31.50	19.6850	640mm	400&600mm	24				5.315		15.7480	2.36	1-8	5.9055	4.5000	1350

* Limited-production item — please contact factory for delivery leadtime.

** 300mm size also fits 320mm pallets with the 10mm-thick edge pads furnished.

Carr Lane®
MANUFACTURING CO.
4200 Carr Lane Ct., P.O. Box 191970
St. Louis, Missouri 63119-7970 USA
Phone: 314-647-6200, FAX: 314-647-5736
Web Site: www.carrlane.com

(Rev. 3-07)

QUICK-CHANGE TOOLING PLATES

GRAY CAST IRON, ASTM CLASS 40 (MULTIPURPOSE HOLES)
1045 STEEL (BLANKS)

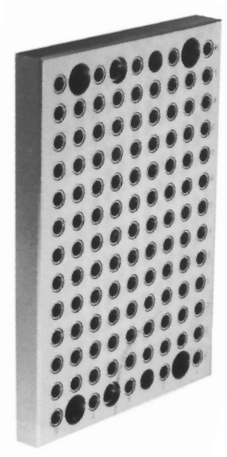

Mini/Standard

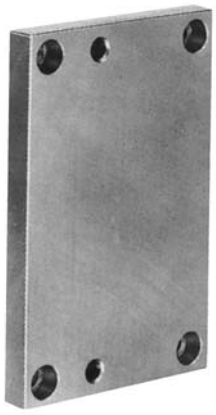

Blank/Standard

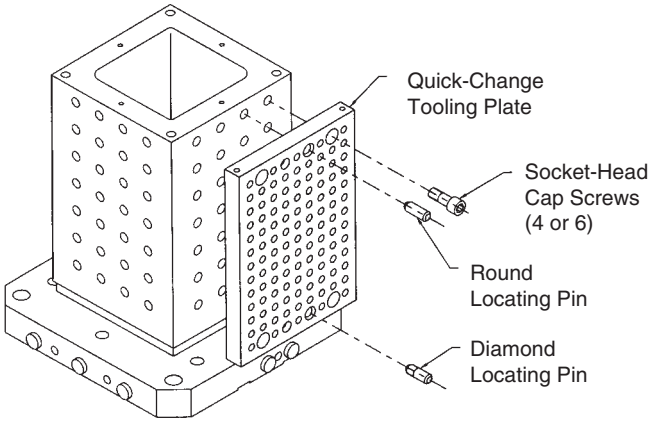

Precision lightweight tooling plates that mount on a modular tooling block. Finish ground to tight tolerances. Plates are available either with multipurpose holes to build modular fixtures (mini size), or as blanks to build permanent fixtures. Multipurpose holes are spaced within .0004 inches of true position. To mount plates on a tooling block, first locate them with Round and Diamond Locating Pins (page 33), then fasten them with socket-head cap screws (page 32).

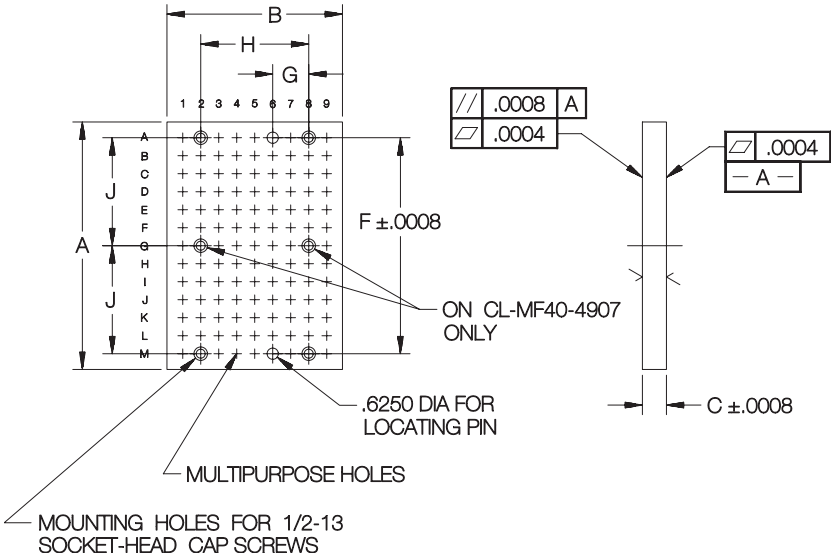

MINI MULTIPURPOSE HOLES

SIZE			MULTIPURPOSE HOLES				MINIMUM PALLET SIZE								APPROX WEIGHT (LBS)	LOCATING PINS (1 EA REQD)	SOCKET-HEAD CAP SCREWS (4 0R 6 REQD)
PLATE	MOUNTING	PART NO.	THREAD	ID	SPACING	PATTERN		A	B	C	F	G	H	J			
MINI	STANDARD	CL-MF25-4905	5/16-18	.5000	1.0000	9x13	400mm	13.75	9.75	1.1875	12.0000	2	6	—	33	CL-MF40-4501	CL-1/2-13x2.00-SHCS
		CL-MF25-4907				11x17	500mm	17.75	11.75		16.0000	4	8		57	CL-MF40-4601	

BLANK

BLANK	STANDARD	CL-MF40-4901	—	—	—	—	400mm	7.50	5.50	1.0000	6.0000	2	4	—	12	CL-MF40-4501 CL-MF40-4601	CL-1/2-13x2.00-SHCS
		CL-MF40-4902						9.50			8.0000				14		
		CL-MF40-4903						9.50	7.50	1.0000	8.0000	2	6	—	20		
		CL-MF40-4904						11.50			10.0000				24		
		CL-MF40-4905						13.50			12.0000				28		
		CL-MF40-4906					500mm	13.50	9.50	1.0000	12.0000	4	8	—	35		
		CL-MF40-4907						17.50		1.1875	16.0000			8	55		

Carr Lane®
MANUFACTURING CO.
4200 Carr Lane Ct., P.O. Box 191970
St. Louis, Missouri 63119-7970 USA
Phone: 314-647-6200, FAX: 314-647-5736
Web Site: www.carrlane.com

(Rev. 3-07)

WINDOW TOOLING BLOCKS

GRAY CAST IRON, ASTM CLASS 45

400mm

Standard

500mm

Standard

630mm

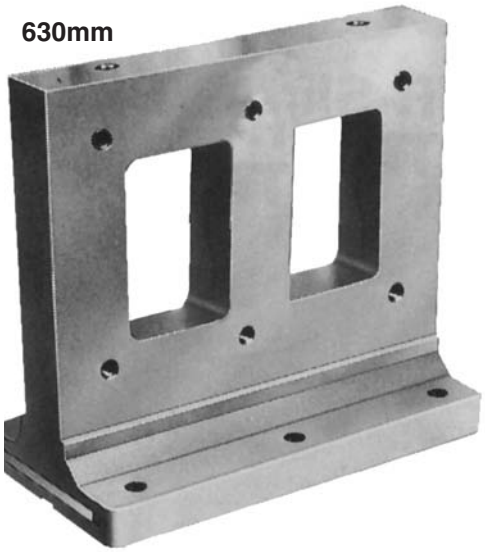

Standard

Precision two-sided frame for mounting Vertical Tooling Plates (page 25), allowing quick fixture changes. Also, the center opening can be used to machine a workpiece from the back side. Both faces are accurately finish ground to tight tolerances, and qualified to the base. One-piece cast construction provides superior accuracy, dimensional stability, and vibration dampening. Available in three popular pallet sizes, with mounting holes to fit almost any USA or metric slot spacing. Dual mounting capability allows both JIS mounting (locating from two reference edges) and DIN mounting (locating from center and radial holes) with excellent accuracy. See page 7 for mounting information.

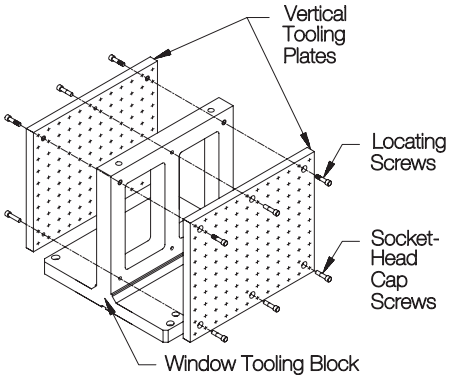

Each Vertical Tooling Plate is accurately mounted on a Window Tooling Block using two Locating Screws at the top corners, and two socket-head cap screws (four on 630mm size).

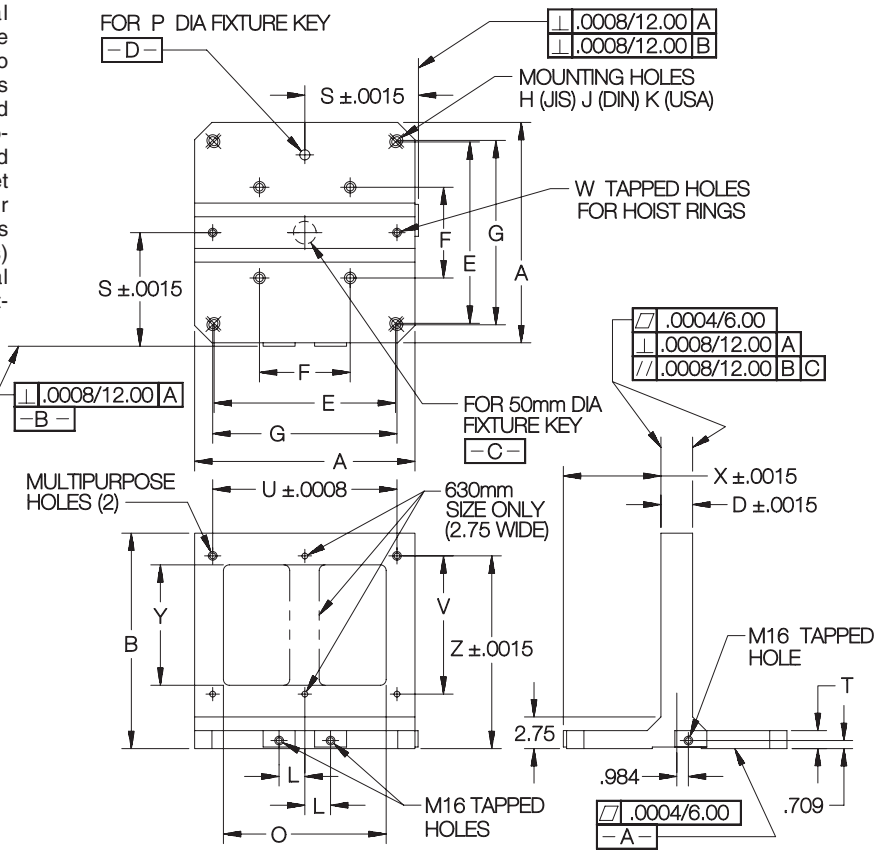

SIZE	PART NO.	MULTIPURPOSE HOLES THREAD	MULTIPURPOSE HOLES ID	A NOMINAL	A ACTUAL	B	D	E (JIS)	F (DIN)	G (USA)	H (JIS)	J (DIN)	K (USA)	L	O	P DIA	S	T	U	V	W	X	Y	Z	APPROX WEIGHT (LBS)
STANDARD	CL-MF40-0651	1/2-13	.5000	400mm	15.20	14.76	2.3622	320mm	200 & 300mm	12	M16	M12	5/8-11 or M16	2.165	10.24	20mm	7.8740	1.97	12.0000	8	5/8-11	6.6929	6.30	12.7500	155
	CL-MF40-0652			500mm	19.13	18.70	2.7559	400mm	200 & 400mm	16				2.953	14.17		9.8425		16.0000	12	7/8-9	8.4646	10.24	16.7500	245
	CL-MF40-0653			630mm	24.25	22.64	5.9055	500mm	200 & 400mm	20		M16		3.937	18.11	25mm	12.4016	2.17	20.0000	16	7/8-9	9.4488	14.17	20.7500	450

Carr Lane®
MANUFACTURING CO.
4200 Carr Lane Ct., P.O. Box 191970
St. Louis, Missouri 63119-7970 USA
Phone: 314-647-6200, FAX: 314-647-5736
Web Site: www.carrlane.com

VERTICAL TOOLING PLATES

GRAY CAST IRON, ASTM CLASS 40

12x16
400mm Pallet

Standard

16x20
500mm Pallet

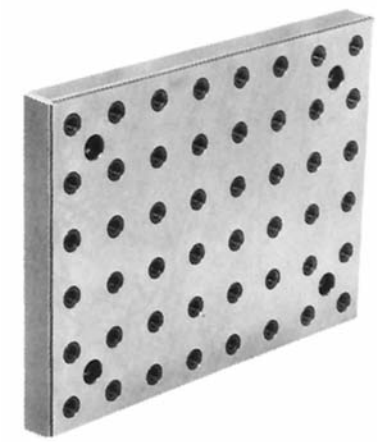

Standard

20x24
630mm Pallet

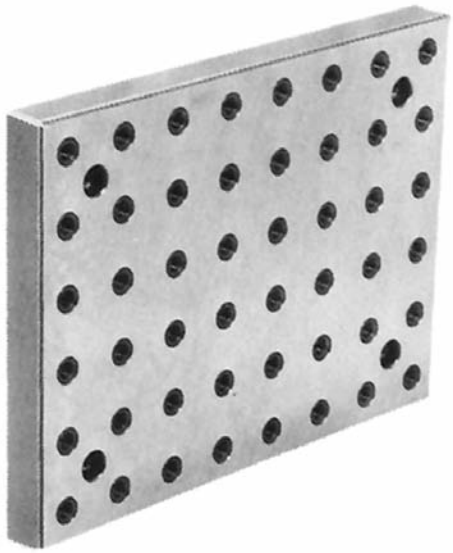

Standard

Precision tooling plates that mount vertically on Window Tooling Blocks for quick-change fixturing on machining centers. Finish ground to tight tolerances, with all multipurpose holes spaced within .0008 inches of true position. Available to fit the three most-popular standard pallet sizes. Each plate is accurately mounted on a Window Tooling Block using two Locating Screws at the top corners, and two socket-head cap screws (four on 630mm size). Also available as blanks, without multipurpose holes (page 262 of tooling-component catalog section).

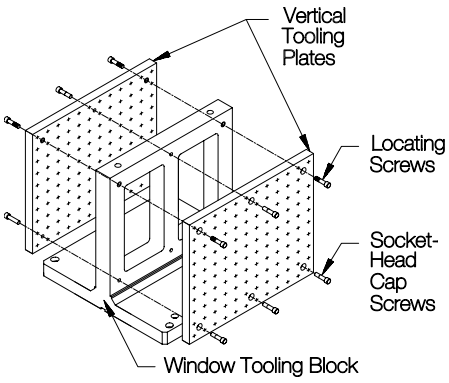

Each Vertical Tooling Plate is accurately mounted on a Window Tooling Block (page 24) using two Locating Screws (page 32) and socket-head cap screws (page 32).

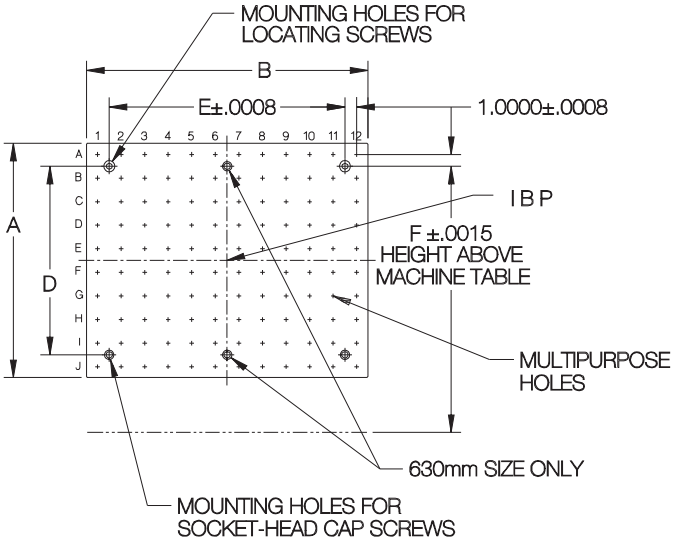

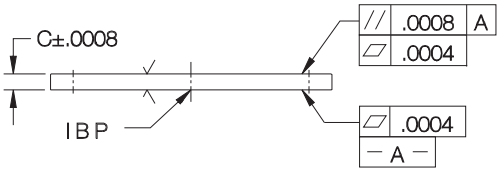

SIZE	PART NO.	MULTIPURPOSE HOLES THREAD	ID	SPACING	PATTERN	PALLET SIZE	A NOMINAL	A ACTUAL	B NOMINAL	B ACTUAL	C	D	E	F	APPROX WEIGHT (LBS)	LOCATING SCREWS (2 REQD)	SOCKET-HEAD CAP SCREWS (2 OR 4 REQD)
STANDARD	CL-MF40-0211	1/2-13	.5000	2.0000	6x8	400mm	12	11.875	16	15.875	1.3750	8	12.0000	12.7500	64	CL-MF40-4301	CL-1/2-13x1.75-SHCS
	CL-MF40-0212				8x10	500mm	16	15.875	20	19.875		12	16.0000	16.7500	105		
	CL-MF40-0213				10x12	630mm	20	19.875	24	23.875		16	20.0000	20.7500	160		

Carr Lane®
MANUFACTURING CO.
4200 Carr Lane Ct., P.O. Box 191970
St. Louis, Missouri 63119-7970 USA
Phone: 314-647-6200, FAX: 314-647-5736
Web Site: www.carrlane.com

(Rev.10-07)

RISER PLATES

GRAY CAST IRON, ASTM CLASS 45

Mini

Standard Heavy

Standard Heavy

Use for raising clamps and locators up to reach a workpiece, parallel to the tooling plate. Riser Plates can be mounted either the short way or the tall way. Two sides have bushed locating-screw holes for accurately mounting the riser plate to the tooling plate. The other two sides have multipurpose holes for mounting clamps and locators.

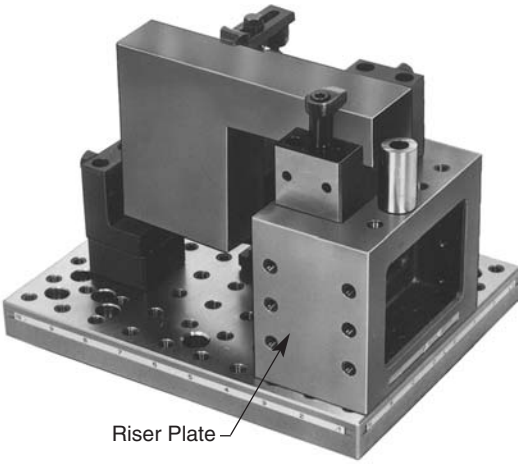

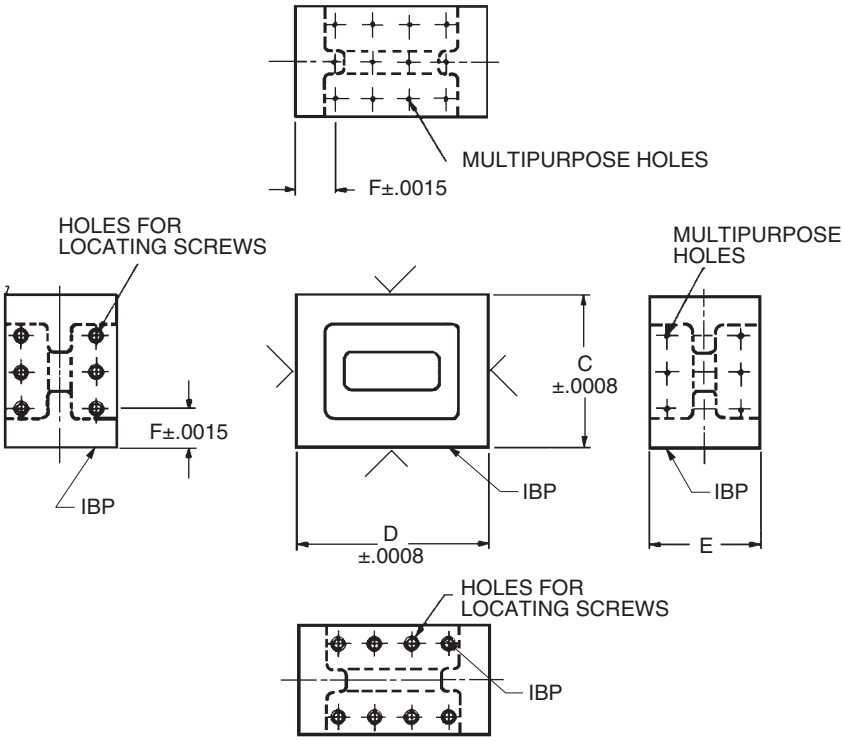

SIZE	PART NO.	MULTIPURPOSE HOLES THREAD	ID	SPACING	PATTERN	C	D	E	F	APPROX WEIGHT (LBS)	LOCATING SCREWS (2 REQD)	SOCKET-HEAD CAP SCREWS (2 REQD)
MINI	CL-MF25-0900	5/16-18	.5000	1.0000	5x5 and 5x3	5.1250	6.1250	5-1/2	1.5625	26	CL-MF25-4300 + CL-5/16-18x1.75-SHCS	CL-5/16-18x1.75-SHCS
STANDARD	CL-MF40-0911	1/2-13	.5000	2.0000	3x3 and 3x2	6.2500	8.2500	5-7/8	2.1250	57	CL-MF40-4302	CL-1/2-13x2.25-SHCS
	CL-MF40-0912				3x4 and 3x3	8.2500	10.2500			81		
HEAVY	CL-MF50-0901	5/8-11	.6250	2.0000	3x3 and 3x2	6.2500	8.2500	5-7/8	2.1250	55	CL-MF50-4302	CL-5/8-11x3.00-SHCS
	CL-MF50-0902				3x4 and 3x3	8.2500	10.2500			79		

Carr Lane®
MANUFACTURING CO.
4200 Carr Lane Ct., P.O. Box 191970
St. Louis, Missouri 63119-7970 USA
Phone: 314-647-6200, FAX: 314-647-5736
Web Site: www.carrlane.com

(Rev. 10-07)

ANGLE PLATES

GRAY CAST IRON, ASTM CLASS 45

Mini Standard Heavy

Standard Heavy

Standard Heavy

Tall

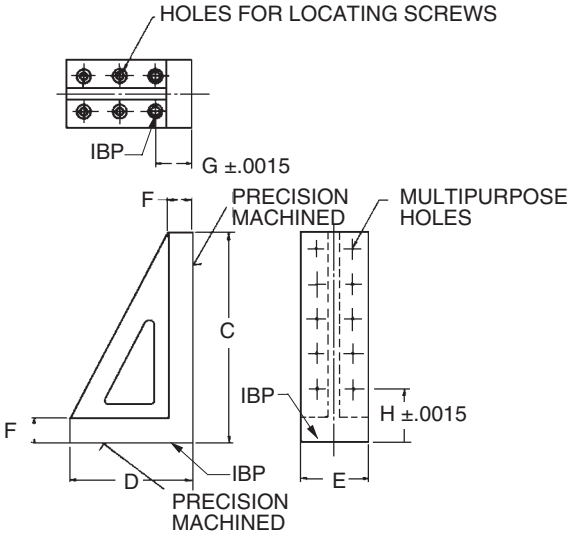

Tall

Standard Heavy

Standard Heavy

Short

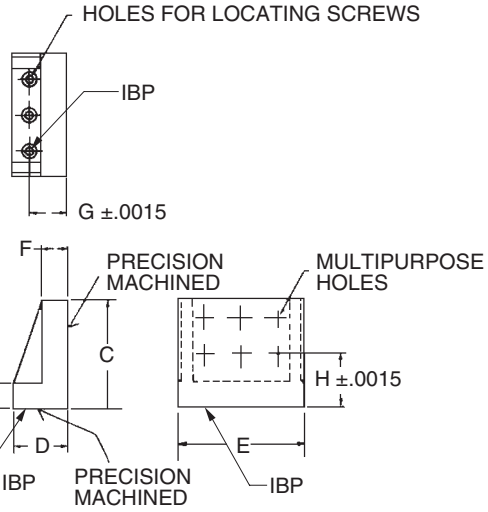

Short

Versatile way to hold workpieces, clamps or locators perpendicular to the tooling surface. Bottom has bushed locating-screw holes for accurately mounting the angle plate to the tooling plate. Vertical side has multipurpose holes for mounting clamps, locators or vertical tooling plates.

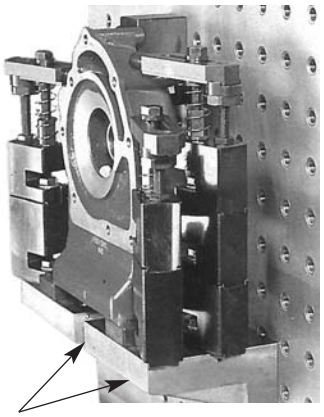

Short Angle Plates

TALL

SIZE	PART NO.	MULTIPURPOSE HOLES THREAD	ID	SPACING	PATTERN	C	D	E	F	G	H	APPROX WEIGHT (LBS)	LOCATING SCREWS (2 REQD)	SOCKET-HEAD CAP SCREWS (1 TO 2 REQD)
MINI	CL-MF25-0401	5/16-18	.5000	1.0000	3x10	11-13/16	5-7/8	3-1/8	1	1.5000	1.5000	22	CL-MF25-4300 + CL-5/16-18x1.75-SHCS	CL-5/16-18x1.75-SHCS
STANDARD	CL-MF40-0411	1/2-13	.5000	2.0000	2x5	11-13/16	6-7/8	3-7/8	1-3/8	2.0000	3.0000	26	CL-MF40-4302	CL-1/2-13x2.25-SHCS
	CL-MF40-0412				2x7	15-3/4	8-13/16					37		
	CL-MF40-0413				2x9	19-11/16	10-13/16					51		
HEAVY	CL-MF50-0401	5/8-11	.6250	2.0000	2x5	11-13/16	7-1/16	3-7/8	1-9/16	2.1875	3.0000	29	CL-MF50-4302	CL-5/8-11x3.00-SHCS
	CL-MF50-0402				2x7	15-3/4	9					41		
	CL-MF50-0403				2x9	19-11/16	11					55		

SHORT

STANDARD	CL-MF40-0511	1/2-13	.5000	2.0000	3x2	5-7/8	2-15/16	6-11/16	1-3/8	2.0000	3.0000	18	CL-MF40-4302	CL-1/2-13x2.25-SHCS
	CL-MF40-0512				3x4	9-13/16	4-7/8					30		
HEAVY	CL-MF50-0501	5/8-11	.6250	2.0000	3x2	5-7/8	3-1/8	6-11/16	1-9/16	2.1875	3.0000	19	CL-MF50-4302	CL-5/8-11x3.00-SHCS
	CL-MF50-0502				3x4	9-13/16	5-1/16					35		

Carr Lane MANUFACTURING CO.
4200 Carr Lane Ct., P.O. Box 191970
St. Louis, Missouri 63119-7970 USA
Phone: 314-647-6200, FAX: 314-647-5736
Web Site: www.carrlane.com

(Rev. 3-07)

QUICK-CHANGE PALLET TOOLING PLATES

MODULAR PLATES: GRAY CAST IRON, ASTM CLASS 40
BLANK PLATES: 1050 STEEL

400mm

Standard Blank

500mm

Standard Heavy Blank

630mm

Standard Heavy Blank

800mm

Heavy Blank

An important new quick-change tooling system (US Patent No. 5,788,225). Fixtures can be assembled off of the machine tool, then quickly mounted on a specially designed pallet subplate, with excellent locating repeatability. The same subplate accepts modular tooling plates, blank tooling plates for permanent fixtures, and subplate tooling blocks. Accurate location is provided by two tapered pins in the subplate, together with mating tapered receiver bushings in the tooling plate, similar to the way that a machine pallet itself is located in a horizontal machining center. Pins and receiver bushings are made from hardened tool steel. Minimal contact area between tooling plate and subplate allows quick cleaning when changing fixtures. Tooling plates are available in a full range of standard pallet sizes, either modular or blank. Modular plates are finish ground to tight tolerances, with a grid of multipurpose holes (hole spacing +/-.0008, hole location from receiver bushings +/-.0016). See pages 30 and 31 for pallet subplates and subplate tooling blocks.

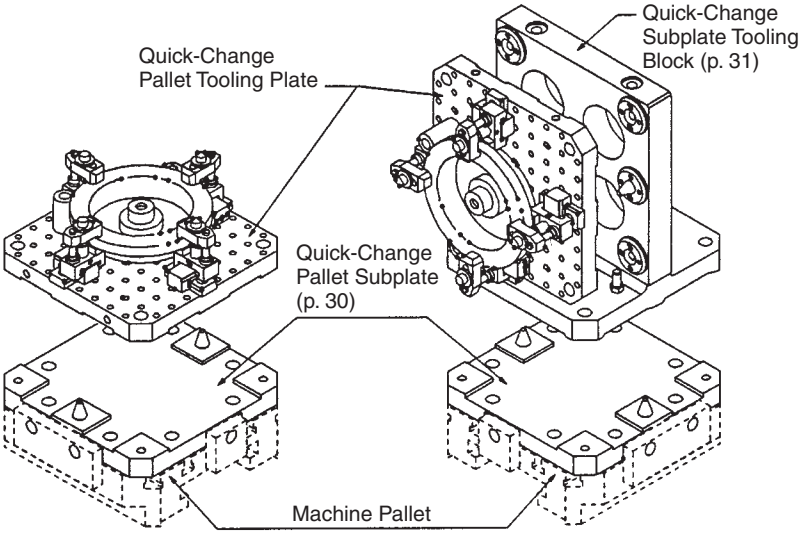

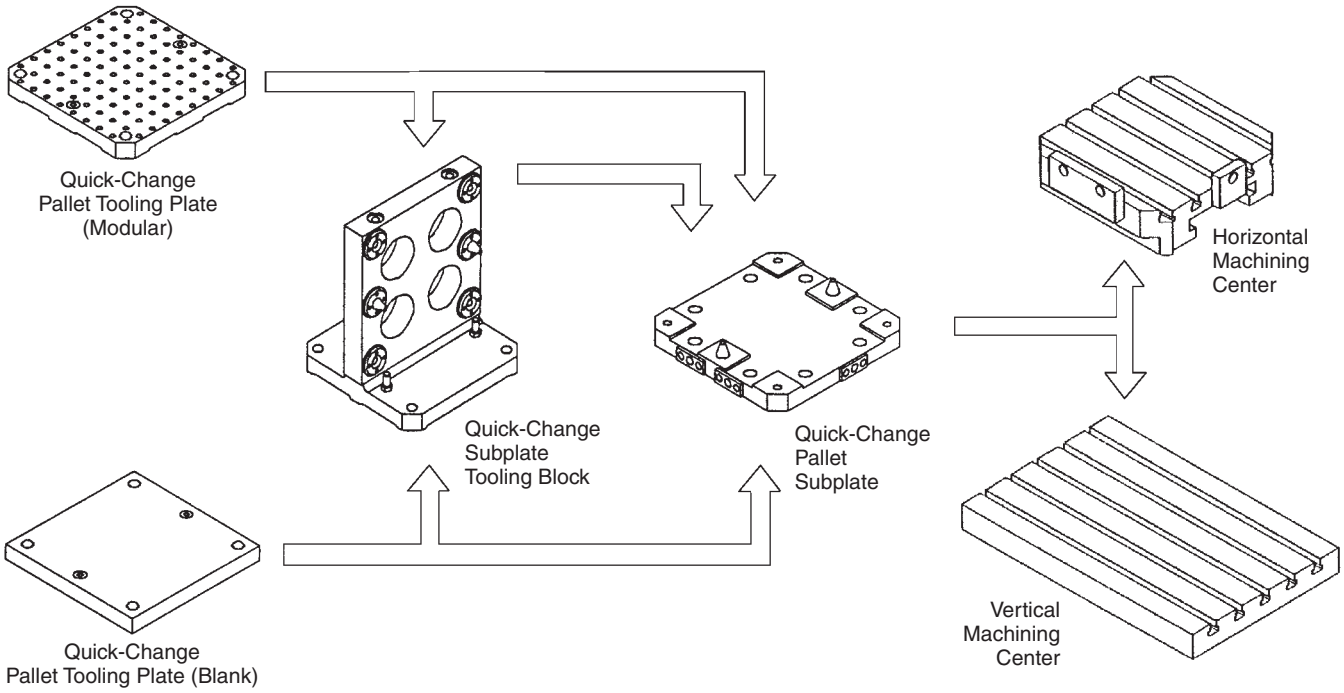

CarrLane®
MANUFACTURING CO.
4200 Carr Lane Ct., P.O. Box 191970
St. Louis, Missouri 63119-7970 USA
Phone: 314-647-6200, FAX: 314-647-5736
Web Site: www.carrlane.com

(Rev. 5-99)

QUICK-CHANGE PALLET TOOLING PLATES

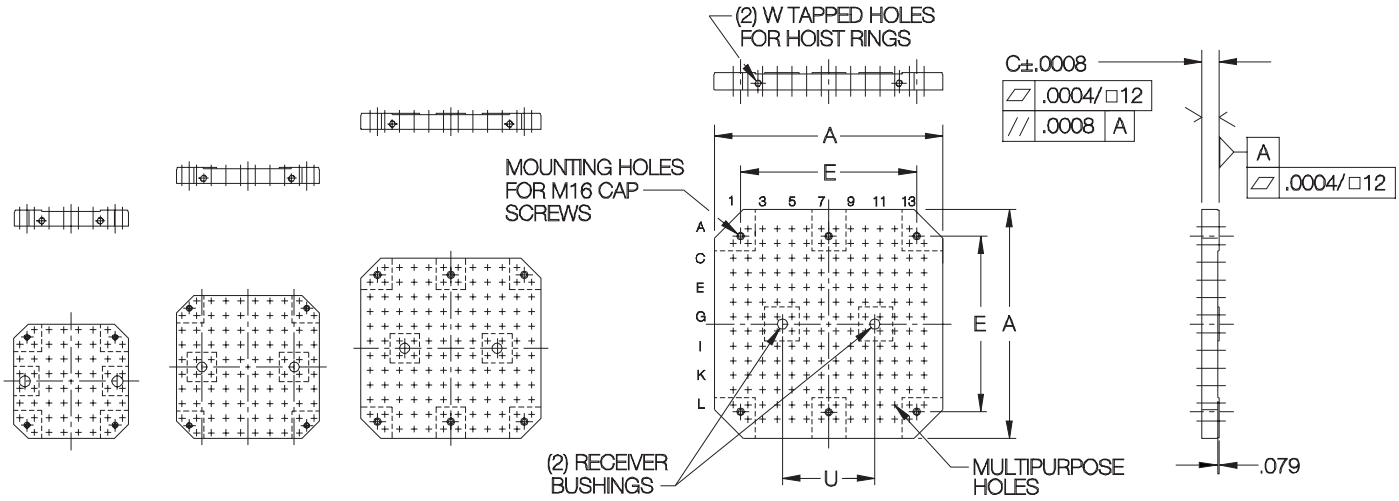

400mm 500mm 630mm 800mm

MODULAR — MULTIPURPOSE HOLES

SIZE	PART NO.	MULTIPURPOSE HOLES THREAD	ID	SPACING	PATTERN	A NOMINAL	A ACTUAL	C NOMINAL	C ACTUAL	E	U	W	APPROX. WEIGHT (LBS)
STANDARD	CL-MF40-0881	1/2 - 13	.5000	2.0000	8x8	400mm	15.20	40mm	1.5748	320mm	320mm	M16	85
	CL-MF40-0882				10x10	500mm	19.13			400mm			130
	CL-MF40-0883				12x12	630mm	24.25			500mm			215
HEAVY	CL-MF50-0882	5/8-11	.6250	2.0000	10x10	500mm	19.13	40mm	1.5748	400mm	320mm	M16	130
	CL-MF50-0883				12x12	630mm	24.25			500mm			210
	CL-MF50-0884				14x14	800mm	30.94	45mm	1.7717	640mm			340

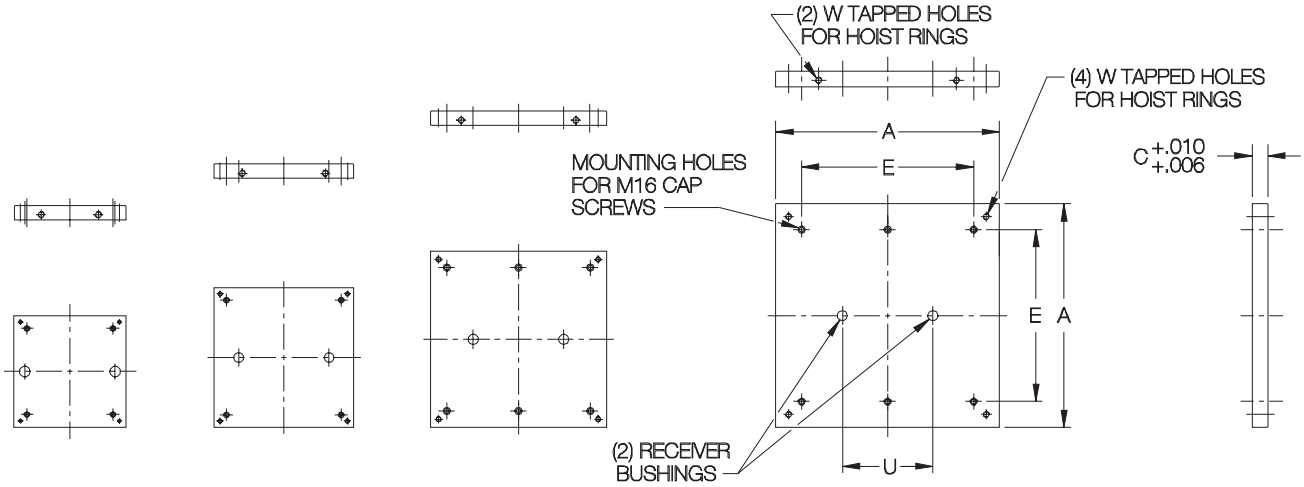

400mm 500mm 630mm 800mm

BLANK

SIZE	PART NO.	A NOMINAL	A ACTUAL	C NOMINAL	C ACTUAL	E	U	W	APPROX. WEIGHT (LBS)
BLANK	CL-BF00-0891	400mm	15.75	40mm	1.575	320mm	320mm	M12	110
	CL-BF00-0892	500mm	19.69			400mm			170
	CL-BF00-0893	630mm	24.80			500mm		M16	275
	CL-BF00-0894	800mm	31.50	45mm	1.772	640mm			495

Note: Do not regrind the bottom of a Pallet Tooling Plate (to preserve the accurate fit of its receiver bushings with the tapered pins of the subplate).

Carr Lane®
MANUFACTURING CO.
4200 Carr Lane Ct., P.O. Box 191970
St. Louis, Missouri 63119-7970 USA
Phone: 314-647-6200, FAX: 314-647-5736
Web Site: www.carrlane.com

(Rev. 3-07)

QUICK-CHANGE PALLET SUBPLATES

GRAY CAST IRON, ASTM CLASS 40

400mm

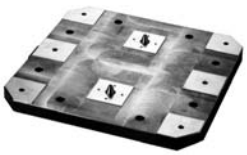

500mm

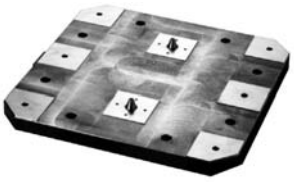

630mm

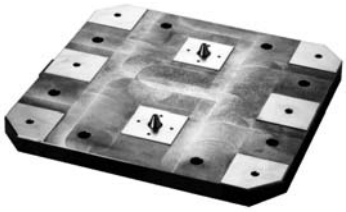

800mm

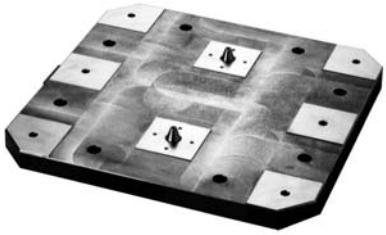

These subplates are the foundation of our new quick-change tooling system. Fixtures can be assembled off of the machine tool, then quickly mounted on the subplate, with excellent locating repeatability. The same subplate accepts modular tooling plates, blank tooling plates for permanent fixtures, and subplate tooling blocks…see pages 28, 29, and 31. Accurate location is provided by two tapered pins in the subplate, together with mating tapered receiver bushings in the tooling plate, similar to the way that a machine pallet itself is located in a horizontal machining center. Pins and receiver bushings are made from hardened tool steel. Pin locations are held +/-.0016 from the subplate's side locating pads. Minimal contact area between tooling plate and subplate allows quick cleaning when changing fixtures. Subplates are available in a full range of standard horizontal-machining-center pallet sizes, and can also be mounted on vertical machining centers by adding appropriate mounting holes. Dual mounting capability allows both JIS mounting (locating from two reference edges) and DIN mounting (locating from center and radial holes) with excellent accuracy.

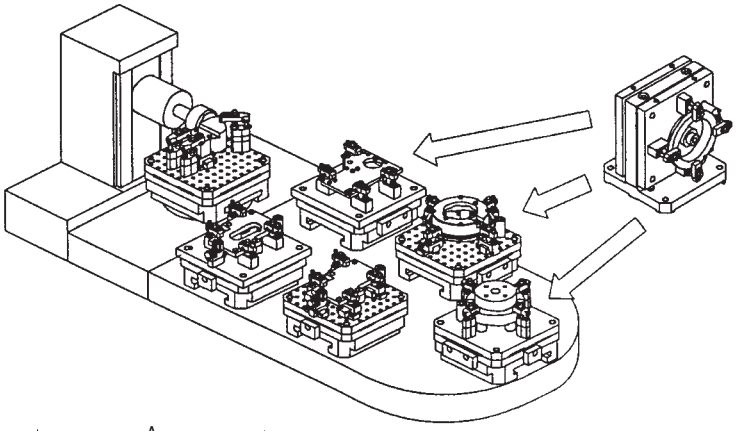

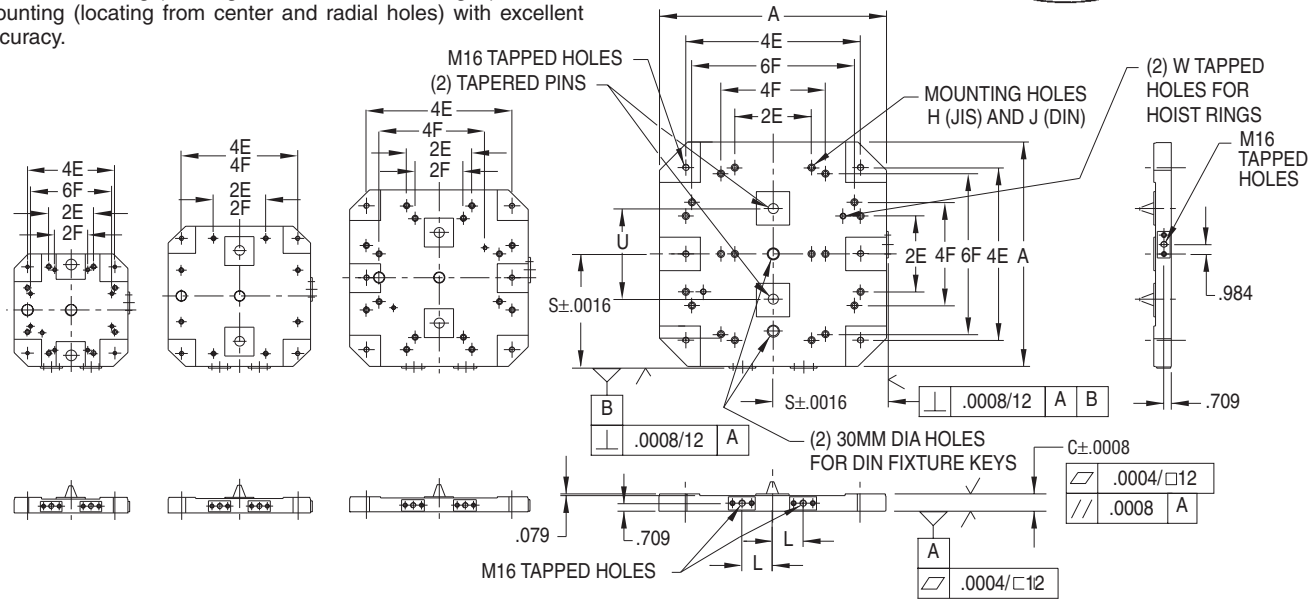

400mm **500mm** **630mm** **800mm**

SIZE	PART NO.	A NOMINAL	A ACTUAL	C NOMINAL	C ACTUAL	E (JIS)	F (DIN)	H (JIS)	J (DIN)	L	S	U	W	APPROX. WEIGHT (LBS)
ALL	CL-MF00-0841	400mm	15.20	40mm	1.5748	80mm	50mm	M16	M12	2.165	7.8740	320mm	M16	95
	CL-MF00-0842	500mm	19.13			100mm	100mm			2.953	9.8425			145
	CL-MF00-0843	630mm	24.25			125mm	100mm		M16	3.937	12.4016			235
	CL-MF00-0844	800mm	30.94	45mm	1.7717	160mm				5.315	15.7480			380

Carr Lane®
MANUFACTURING CO.
4200 Carr Lane Ct., P.O. Box 191970
St. Louis, Missouri 63119-7970 USA
Phone: 314-647-6200, FAX: 314-647-5736
Web Site: www.carrlane.com

(Rev. 3-07)

QUICK-CHANGE SUBPLATE TOOLING BLOCKS

GRAY CAST IRON, ASTM CLASS 45

400mm

500mm

630mm

800mm

Subplate tooling blocks are important components of our new quick-change tooling system. These two-sided tooling blocks mount on a Quick-Change Pallet Subplate (page 30), and accept Quick-Change Pallet Tooling Plates, either modular or blank (pages 28-29). This allows tooling-block fixtures to be assembled off of the machine tool, either as individual plates or the entire tooling block, then quickly mounted on a pallet subplate, with excellent locating repeatability. Subplate tooling blocks have two tapered pins on each face for accurately mounting tooling plates, and also have two receiver bushings of their own underneath to provide accurate location on a subplate. Pin and receiver locations are held to +/-.0016.

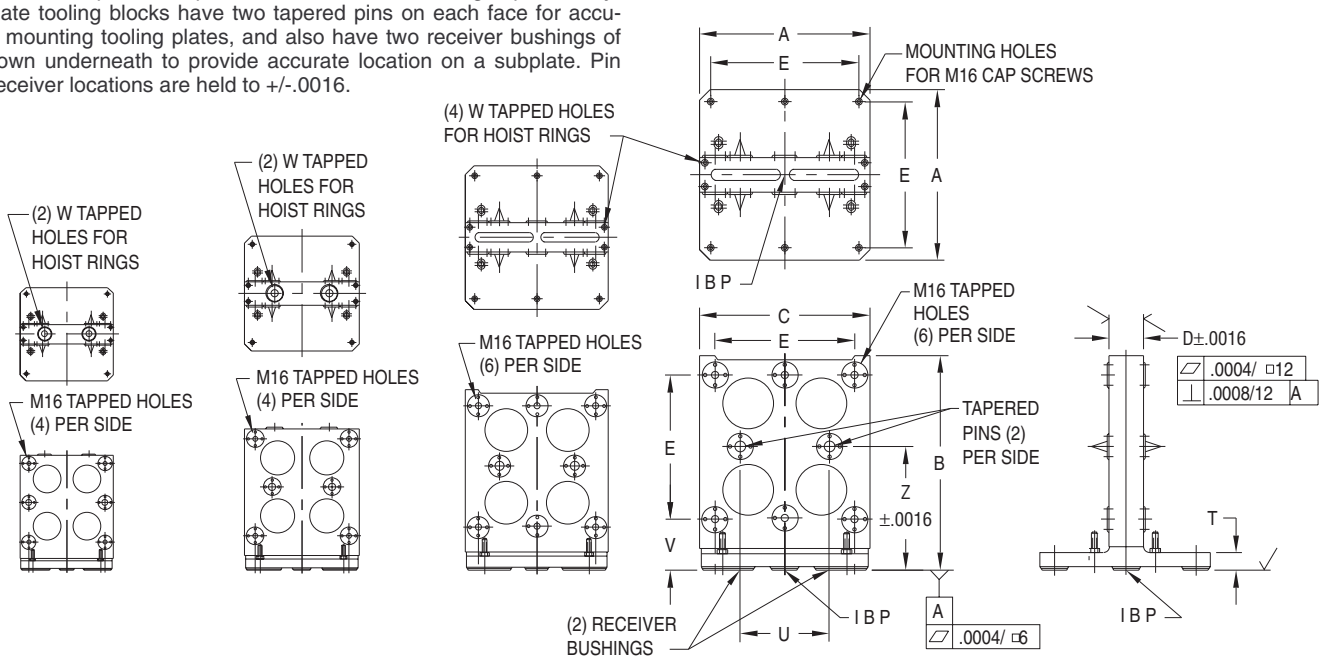

400mm 500mm 630mm 800mm

SIZE	PART NO.	A NOMINAL	A ACTUAL	B NOMINAL	B ACTUAL	C NOMINAL	C ACTUAL	D NOMINAL	D ACTUAL	E	T	U	V	W	Z	APPROX. WEIGHT (LBS)
ALL	CL-MF00-0641	400mm	15.35	465mm	18.31	400mm	15.75	80mm	3.1496	320mm	1.57	320mm	3.9370	M16	10.2362	210
	CL-MF00-0642	500mm	19.13	585mm	23.03	500mm	19.69	100mm	3.9370	400mm	1.77		5.3150	M20	13.1890	415
	CL-MF00-0643	630mm	24.25	730mm	28.74	630mm	24.80	150mm	5.9055	500mm	2.17		6.2992	M20	16.1417	780
	CL-MF00-0644	800mm	30.94	930mm	36.61	800mm	31.50	200mm	7.8740	640mm	2.36		8.2677	M24	20.8661	1420

Carr Lane MANUFACTURING CO.
4200 Carr Lane Ct., P.O. Box 191970
St. Louis, Missouri 63119-7970 USA
Phone: 314-647-6200, FAX: 314-647-5736
Web Site: www.carrlane.com

(Rev. 3-07)

LOCATING SCREWS

4130 STEEL, HEAT TREATED RC 33-39, BLACK OXIDE FINISH

Standard
Heavy

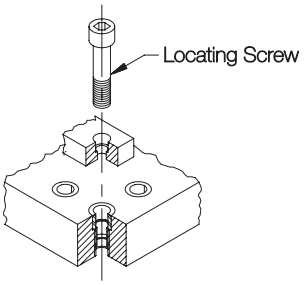

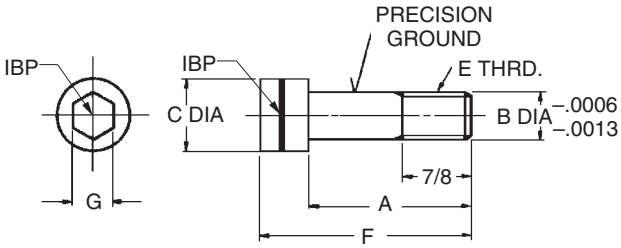

Locating Screws are used to mount all locators in multi-purpose grid holes (standard and heavy sizes). These specially designed, precision shoulder screws accurately locate and fasten at the same time.

SIZE	PART NO.	A	B DIA	C DIA	E	F	G
STANDARD	CL-MF40-4301	1-3/4	.5000	3/4	1/2-13	2-1/4	3/8
	CL-MF40-4302	2-1/4				2-3/4	
	CL-MF40-4303	2-3/4				3-1/4	
HEAVY	CL-MF50-4301	2	.6250	15/16	5/8-11	2-5/8	1/2
	CL-MF50-4302	2-1/2				3-1/8	
	CL-MF50-4303	3				3-5/8	

LOCATING BUSHINGS

1144 STEEL, HEAT TREATED RC 58-64, BLACK OXIDE FINISH

Mini

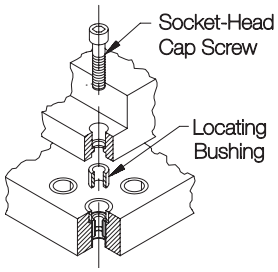

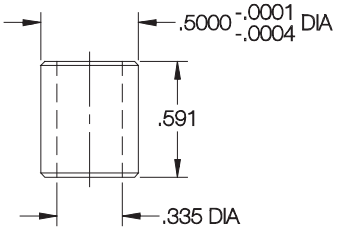

Used in mini-sized systems only. A Locating Bushing used together with a socket-head cap screw works similarly to a Locating Screw. This construction adds extra strength to mini components despite their small size.

SIZE	PART NO.	FITS SOCKET-HEAD CAP SCREWS
MINI	CL-MF25-4300	5/16-18

SOCKET-HEAD CAP SCREWS

GRADE 8, BLACK OXIDE FINISH

Mini
Standard
Heavy

Socket-head cap screws (grade 8) are used for fastening components whenever precise location is not needed. The starter-set listings on pages 11-13 show part numbers and quantities of screws typically used with mini, standard, and heavy systems. Metric sizes are used to fasten plates and blocks to machine pallets.

USA

PART NO.	THREAD SIZE	LENGTH UNDER HEAD
CL-6-32x.50-SHCS	#6-32	.50
CL-10-32x.50-SHCS	#10-32	.50
CL-10-32x1.50-SHCS		1.50
CL-1/4-20x.62-SHCS	1/4-20	.62
CL-1/4-20x.75-SHCS		.75
CL-1/4-20x1.50-SHCS		1.50
CL-1/4-20x2.00-SHCS		2.00
CL-1/4-20x2.50-SHCS		2.50
CL-5/16-18x.62-SHCS	5/16-18	.62
CL-5/16-18x.75-SHCS		.75
CL-5/16-18x1.00-SHCS		1.00
CL-5/16-18x1.12-SHCS		1.12
CL-5/16-18x1.38-SHCS		1.38
CL-5/16-18x1.50-SHCS		1.50
CL-5/16-18x1.75-SHCS		1.75
CL-5/16-18x2.00-SHCS		2.00
CL-5/16-18x2.50-SHCS		2.50
CL-5/16-18x3.50-SHCS		3.50
CL-3/8-16x4.00-SHCS	3/8-16	4.00
CL-1/2-13x1.00-SHCS	1/2-13	1.00
CL-1/2-13x1.25-SHCS		1.25
CL-1/2-13x1.50-SHCS		1.50
CL-1/2-13x1.75-SHCS		1.75
CL-1/2-13x2.00-SHCS		2.00
CL-1/2-13x2.25-SHCS		2.25
CL-1/2-13x2.75-SHCS		2.75
CL-1/2-13x4.50-SHCS		4.50
CL-5/8-11x1.00-SHCS	5/8-11	1.00
CL-5/8-11x1.25-SHCS		1.25
CL-5/8-11x1.50-SHCS		1.50
CL-5/8-11x2.00-SHCS		2.00
CL-5/8-11x2.25-SHCS		2.25
CL-5/8-11x2.50-SHCS		2.50
CL-5/8-11x3.00-SHCS		3.00
CL-5/8-11x5.00-SHCS		5.00
CL-3/4-10x1.50-SHCS	3/4-10	1.50
CL-1-8x1.50-SHCS	1-8	1.50

METRIC

CLM-16x40-SHCS	M16	1.57
CLM-16x50-SHCS		1.97
CLM-16x65-SHCS		2.56

Carr Lane®
MANUFACTURING CO.
4200 Carr Lane Ct., P.O. Box 191970
St. Louis, Missouri 63119-7970 USA
Phone: 314-647-6200, FAX: 314-647-5736
Web Site: www.carrlane.com

(Rev. 10-07)

LOCATING GAGES

1045 STEEL, BLACK OXIDE FINISH

Standard
Heavy

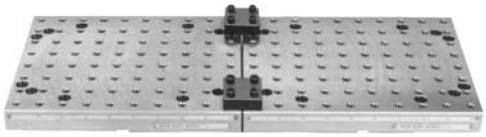

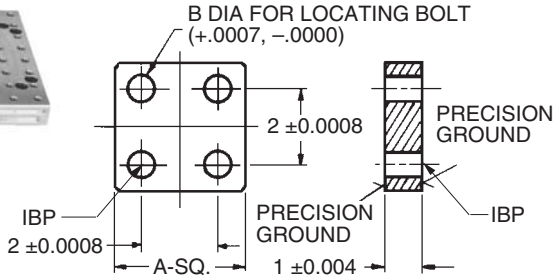

Use when connecting two tooling plates, to hold tolerances. Remove after fastening plates to machine.

SIZE	PART NO.	A	B DIA	LOCATING SCREW (4 REQD)
STANDARD	CL-MF40-4001	3-1/8	.5000	CL-MF40-4302
HEAVY	CL-MF50-4001	3-3/8	.6250	CL-MF50-4302

LOCATING PINS

1144 STEEL, HEAT TREATED RC 50-55, BLACK OXIDE FINISH

Round

Diamond

Standard
Heavy

Round and Diamond Locating Pins are used together to align Quick-Change Tooling Plates or vises on a modular plate or block.

ROUND

SIZE	PART NO.	HEAD DIA	SHANK DIA
STANDARD	CL-MF40-4501	.6250	.5000
HEAVY	CL-MF50-4501		.6250

DIAMOND

STANDARD	CL-MF40-4601	.6250	.5000
HEAVY	CL-MF50-4601		.6250

HEX-HEAD CAP SCREWS

GRADE 8, BLACK OXIDE FINISH

Mini
Standard
Heavy

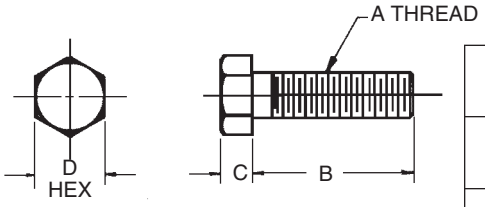

Mounting screws for high-rise clamps, where access to a socket-head screw is difficult.

SIZE	PART NO.	A	B	C	D
MINI	CL-MF25-4311	5/16-18	.75	13/64	1/2
	CL-MF25-4312		1.25		
	CL-MF25-4313		1.50		
STANDARD	CL-MF40-4311	1/2-13	1.75	5/16	3/4
	CL-MF40-4312		2.75		
	CL-MF40-4313		3.00		
HEAVY	CL-MF50-4311	5/8-11	2.00	25/64	15/16
	CL-MF50-4312		3.00		
	CL-MF50-4313		3.50		

SPARE PROTECTION PLUGS

PLASTIC

Mini
Standard
Heavy

Durable screw-in plugs to keep dirt and chips out of holes that are not used for a particular setup. Note: a complete set of protection plugs is furnished with each tooling plate and block.

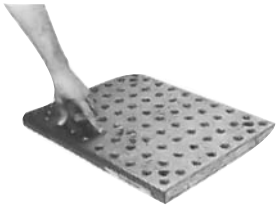

SIZE	PART NO.
MINI	CL-MF25-0001
STANDARD	CL-MF40-0001
HEAVY	CL-MF50-0001

Carr Lane®
MANUFACTURING CO.
4200 Carr Lane Ct., P.O. Box 191970
St. Louis, Missouri 63119-7970 USA
Phone: 314-647-6200, FAX: 314-647-5736
Web Site: www.carrlane.com

(Rev. 3-07)

CLAMP RISER BLOCKS

1041 STEEL, BLACK OXIDE FINISH

Standard
Heavy

Stackable block for raising clamps up a workpiece. Especially useful for mounting Swing Clamp Assemblies (page 56), Screw Clamp Adaptors (page 62) and Toggle Clamp Adaptors (page 63).

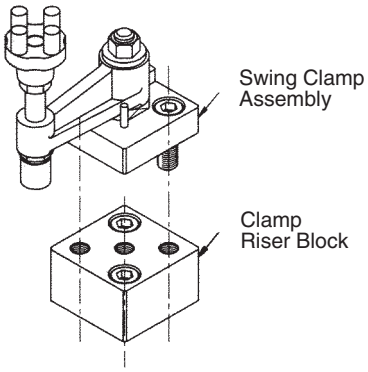

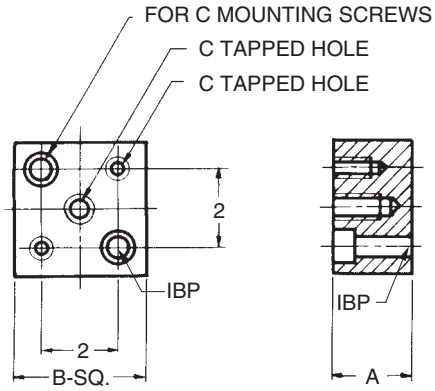

SIZE	PART NO.	A	B	C DIA	SOCKET-HEAD CAP SCREW (2 REQD)
STANDARD	CL-MF40-1601	1	2-15/16	1/2-13	CL-1/2-13x1.50-SHCS
	CL-MF40-1602	2			CL-1/2-13x2.75-SHCS
HEAVY	CL-MF50-1601	1	3-3/8	5/8-11	CL-5/8-11x2.00-SHCS
	CL-MF50-1602	2			CL-5/8-11x3.00-SHCS

SIDEWAYS MOUNTING BLOCKS

1045 STEEL, BLACK OXIDE FINISH

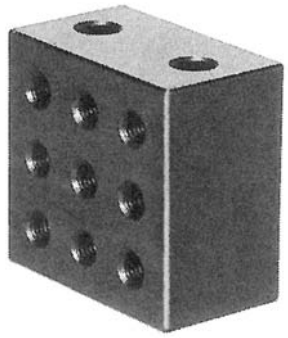

Mini
Standard
Heavy

Versatile block that allows mounting a clamp, or other component, sideways. Note: Riser Plates (page 26 also can be used for sideways mounting when additional strength and rigidity are required.

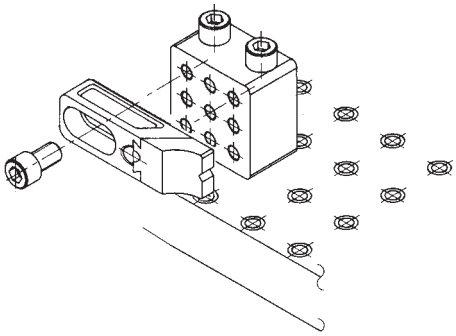

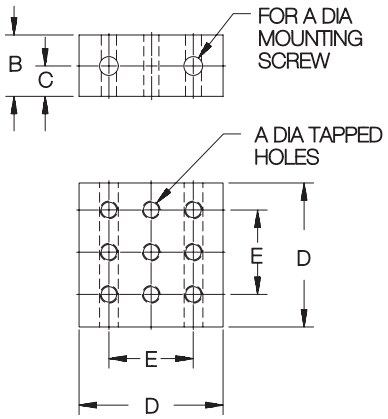

SIZE	PART NO.	A	B	C	D	E	SOCKET-HEAD CAP SCREW (2 REQD)
MINI	CL-MF25-1650	5/16-18	1	5/8	1-7/8	1	CL-5/16-18x2.50-SHCS
STANDARD	CL-MF40-1650	1/2-13	2	1	3-3/8	2	CL-1/2-13x4.50-SHCS
HEAVY	CL-MF50-1650	5/8-11	2	1-1/4	3-3/8	2	CL-5/8-11x5.00-SHCS

Carr Lane®
MANUFACTURING CO.
4200 Carr Lane Ct., P.O. Box 191970
St. Louis, Missouri 63119-7970 USA
Phone: 314-647-6200, FAX: 314-647-5736
Web Site: www.carrlane.com

(Rev. 3-07)

SUPPORT RISER BLOCKS

1045 STEEL, BLACK OXIDE FINISH

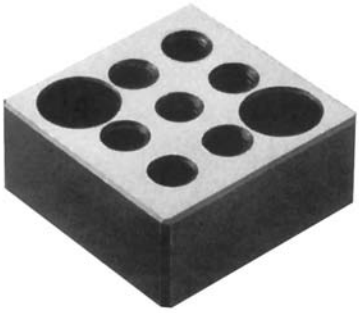

Mini
Standard
Heavy

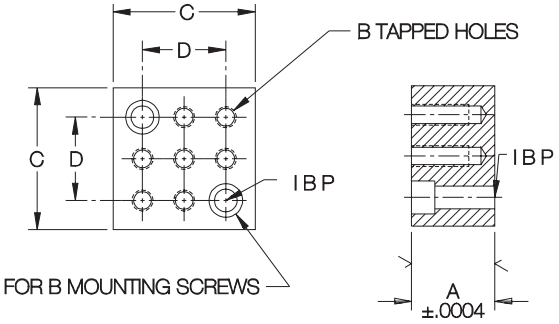

Stackable block with precision ground top and bottom surfaces for accurate height location. Ideal for raising supports up to a workpiece. A choice of seven tapped holes allows mounting the support at any position between grid points.

SIZE	PART NO.	A	B	C	D	SOCKET-HEAD CAP SCREW (2 REQD)
MINI	CL-MF25-1411	.5000	5/16-18	1-3/4	1	CL-5/16-18x1.00-SHCS
	CL-MF25-1412	.7500				CL-5/16-18x1.12-SHCS
	CL-MF25-1413	1.0000				CL-5/16-18x1.38-SHCS
	CL-MF25-1414	2.0000				CL-5/16-18x2.50-SHCS
STANDARD	CL-MF40-1411	1.0000	1/2-13	3-3/8	2	CL-1/2-13x1.50-SHCS
	CL-MF40-1412	1.2500				CL-1/2-13x1.75-SHCS
	CL-MF40-1413	1.5000				CL-1/2-13x2.00-SHCS
	CL-MF40-1414	2.0000				CL-1/2-13x2.50-SHCS
HEAVY	CL-MF50-1411	1.0000	5/8-11	3-3/8	2	CL-5/8-11x2.00-SHCS
	CL-MF50-1412	1.2500				
	CL-MF50-1413	1.5000				CL-5/8-11x2.25-SHCS
	CL-MF50-1414	2.0000				CL-5/8-11x3.00-SHCS

MULTIPURPOSE RISER BLOCKS

1045 STEEL, BLACK OXIDE FINISH

Mini
Standard
Heavy

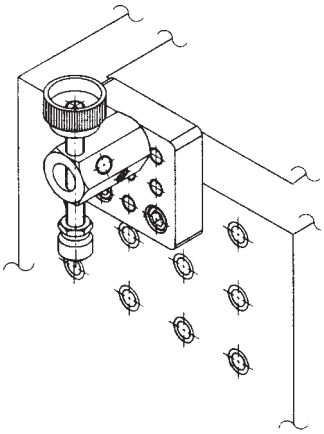

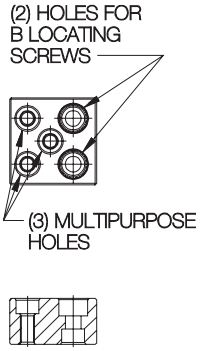

Mini

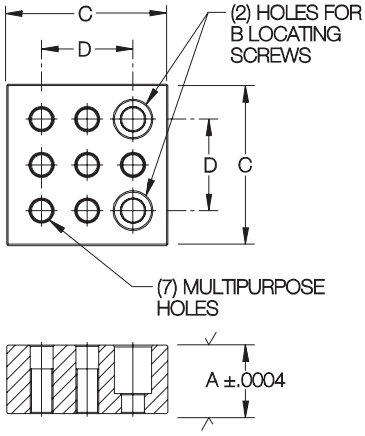

Standard
Heavy

A stackable, precision riser block with multipurpose holes instead of plain tapped holes. This unique feature allows raising any locator that mounts with Locating Screws, including Edge Supports (page 39), Support Cylinders (page 40-41), Locating Pin Adaptors (page 42-43), and V Blocks (page 44-45 These blocks can also be used to extend some components beyond the edge of a tooling plate, as shown in the example.

SIZE	PART NO.	MULTIPURPOSE HOLES THREAD	MULTIPURPOSE HOLES ID	A	B	C	D	LOCATING SCREWS (2 REQD)
MINI	CL-MF25-1461	5/16-18	.5000	1.0000	5/16-18	1.98	1.0000	CL-MF25-4300+ CL-5/16-18x1.38-SHCS
	CL-MF25-1462			1.5000				CL-MF25-4300+ CL-5/16-18x1.38-SHCS
STANDARD	CL-MF40-1462	1/2-13	.5000	1.5000	1/2-13	3.46	2.0000	CL-MF40-4301
	CL-MF40-1463			2.0000				
HEAVY	CL-MF50-1463	5/8-11	.6250	2.0000	5/8-11	3.46	2.0000	CL-MF50-4301

MANUFACTURING CO.
4200 Carr Lane Ct., P.O. Box 191970
St. Louis, Missouri 63119-7970 USA
Phone: 314-647-6200, FAX: 314-647-5736
Web Site: www.carrlane.com

(Rev. 3-07)

EXTENSION SUPPORTS

1045 STEEL, HEAT TREATED, BLACK OXIDE FINISH

Mini

Standard Heavy

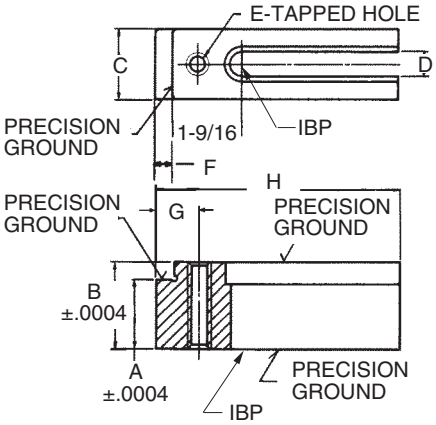

Extension Supports have a precision ground top and bottom surface for accurate height location. Standard and heavy sizes also have a precision ground step, for simultaneous height and edge location. Available in many support heights to match other types of height locators. The tapped hole is ideal for positioning components between grid points.

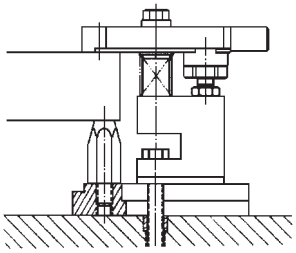

Screw Rest Pads (page 44) can be positioned anywhere between grid points when mounted on an Extension Support.

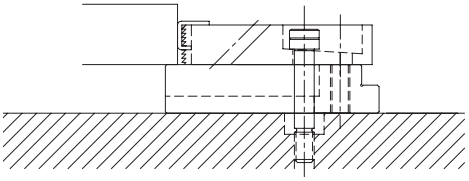

Extension Supports are a perfect height locator to mount underneath Serrated Adjustable Clamps (page 60).

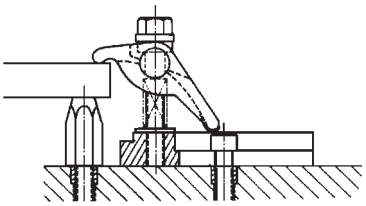

Forged Adjustable Clamps (page 58) can be placed anywhere between grid points when mounted in an Extension Support's tapped hole.

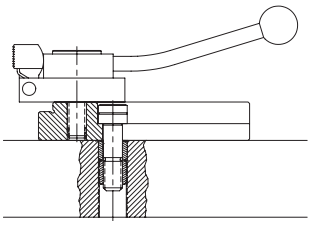

Cam Edge Clamps (page 58) can be placed anywhere between grid points when mounted in an Extension Support's tapped hole.

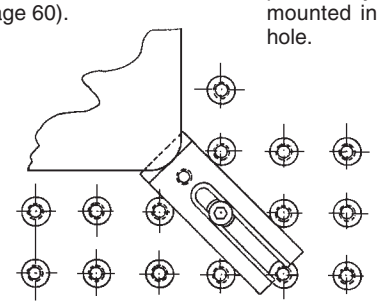

Extension Supports allow precise edge location anywhere between grid points.

SIZE	PART NO.	A	B	C	D	E	F	G	H	SOCKET-HEAD CAP SCREW (1 REQD)
MINI	CL-MF25-3301	—	.5000	7/8	11/32	5/16-18	—	5/16	2-1/2	CL-5/16-18x1.00-SHCS
	CL-MF25-3302		.7500							
	CL-MF25-3303		1.0000							
	CL-MF25-3304		1.2500							CL-5/16-18x1.50-SHCS
	CL-MF25-3305		1.5000							
	CL-MF25-3306		2.0000							
STANDARD	CL-MF40-3300	.7500	1.0000	1-1/2	17/32	1/2-13	3/8	1	5-1/2	CL-1/2-13x1.50-SHCS
	CL-MF40-3301	1.0000	1.2500							
	CL-MF40-3302	1.5000	2.0000							CL-1/2-13x2.75-SHCS
HEAVY	CL-MF50-3301	1.0000	1.2500	2	21/32	5/8-11	1/2	1-1/8	5-1/2	CL-5/8-11x2.00-SHCS
	CL-MF50-3302	1.5000	2.0000							CL-5/8-11x2.50-SHCS

Carr Lane®
MANUFACTURING CO.
4200 Carr Lane Ct., P.O. Box 191970
St. Louis, Missouri 63119-7970 USA
Phone: 314-647-6200, FAX: 314-647-5736
Web Site: www.carrlane.com

(Rev. 3-07)

MULTIPURPOSE EXTENSION SUPPORTS

1018 STEEL, CASE HARDENED, BLACK OXIDE FINISH

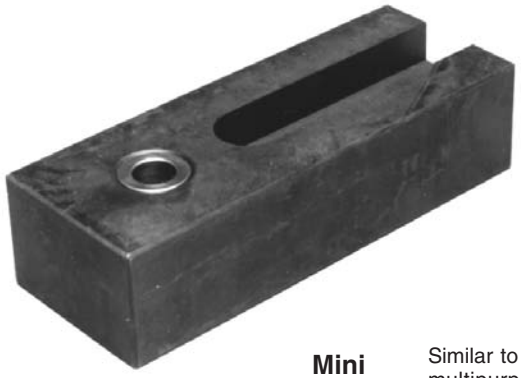

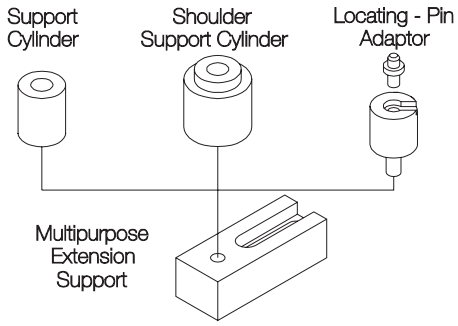

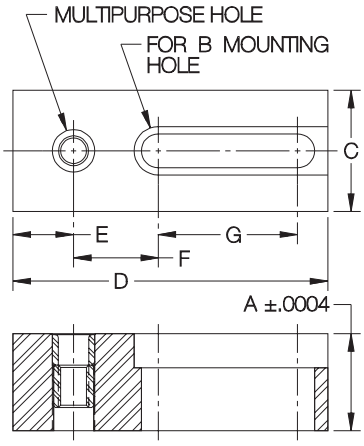

Mini
Standard
Heavy

Similar to the Extension Supports on page 36, but with a multipurpose hole instead of a plain tapped hole (and slightly larger). This allows attaching any fixed-position locator that mounts with a Locating Screw, enabling that locator to be used between grid points. Such locators include Support Cylinders (page 40), Shoulder Support Cylinders (page 41), and Locating-Pin Adaptors (pages 42-43). Top and bottom surfaces are precision ground for accurate height location.

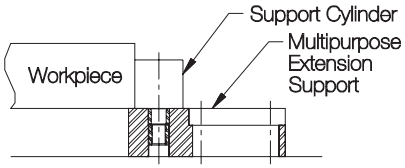

Can be used with a Support Cylinder for simultaneous horizontal and vertical location, using the top surface of the Multipurpose Extension Support as a height locator.

SIZE	PART NO.	MULTIPURPOSE HOLE THREAD	MULTIPURPOSE HOLE ID	A	B	C	D	E	F	G	SOCKET-HEAD CAP SCREW (1 REQD)
MINI	CL-MF25-4751	5/16-18	.5000	1.0000	5/16-18	1-1/2	3-5/8	3/4	1	1-1/2	CL-5/16-18x1.00-SHCS
STANDARD	CL-MF40-4751	1/2-13	.5000	1.5000	1/2-13	2-1/4	6	1-1/4	1-3/8	2-7/8	CL-1/2-13x2.00-SHCS
HEAVY	CL-MF50-4751	5/8-11	.6250	2.0000	5/8-11	2-1/2	6-1/2	1-1/4	1-3/4	2-7/8	CL-5/8-11x2.50-SHCS

HALFWAY EXTENSION SUPPORTS

1045 STEEL, HEAT TREATED, BLACK OXIDE FINISH

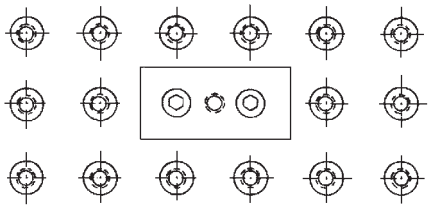

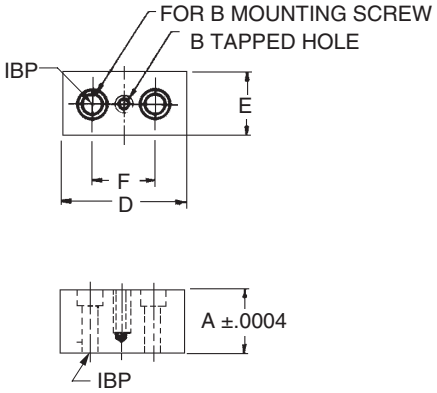

Mini
Standard
Heavy

Precision ground top and bottom surface for accurate height location. Ideal for positioning components exactly halfway between two multipurpose holes. Also useful as a large rest pad.

SIZE	PART NO.	A	B	D	E	F	SOCKET-HEAD CAP SCREWS (2 REQD)
MINI	CL-MF25-3601	.5000	5/16-18	2	7/8	1	CL-5/16-18x1.00-SHCS
	CL-MF25-3602	.7500					
	CL-MF25-3603	1.0000					
	CL-MF25-3604	1.2500					CL-5/16-18x1.38-SHCS
	CL-MF25-3605	1.5000					
	CL-MF25-3606	2.0000					
STANDARD	CL-MF40-3601	1.0000	1/2-13	4	2	2	CL-1/2-13x1.50-SHCS
	CL-MF40-3602	1.2500					
	CL-MF40-3603	1.5000					
HEAVY	CL-MF50-3601	1.0000	5/8-11	4	2	2	CL-5/8-11x2.00-SHCS
	CL-MF50-3602	1.2500					
	CL-MF50-3603	1.5000					

CarrLane®
MANUFACTURING CO.
4200 Carr Lane Ct., P.O. Box 191970
St. Louis, Missouri 63119-7970 USA
Phone: 314-647-6200, FAX: 314-647-5736
Web Site: www.carrlane.com

(Rev. 3-07)

HEIGHT SHIMS

1144 STEEL, HEAT TREATED, BLACK OXIDE FINISH

Mini
Standard
Heavy

Precision shims that allow raising a height locator by a small, exact amount. Ideal when supporting at different levels underneath a workpiece, as in the example shown using Support Cylinders. Shims are stackable to obtain any height in .001-inch increments. Thickness tolerance is ±.0003 on .062 and .125 sizes, ± 10% on smaller sizes.

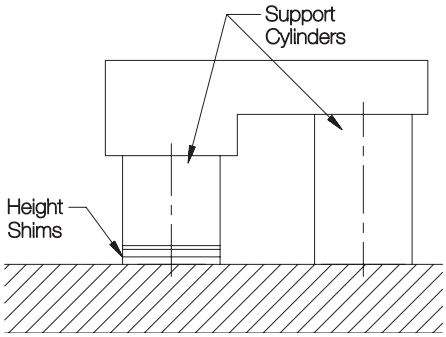

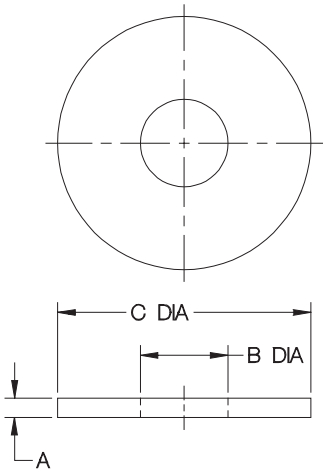

SIZE	PART NO.	A	B DIA	C DIA
MINI	CL-MF25-7002	.002	9/16	15/16
	CL-MF25-7003	.003		
	CL-MF25-7004	.004		
	CL-MF25-7005	.005		
	CL-MF25-7010	.010		
	CL-MF25-7020	.020		
	CL-MF25-7062	.062		
	CL-MF25-7125	.125		
STANDARD	CL-MF40-7002	.002	9/16	1-5/8
	CL-MF40-7003	.003		
	CL-MF40-7004	.004		
	CL-MF40-7005	.005		
	CL-MF40-7010	.010		
	CL-MF40-7020	.020		
	CL-MF40-7062	.062		
	CL-MF40-7125	.125		
HEAVY	CL-MF50-7002	.002	11/16	1-7/8
	CL-MF50-7003	.003		
	CL-MF50-7004	.004		
	CL-MF50-7005	.005		
	CL-MF50-7010	.010		
	CL-MF50-7020	.020		
	CL-MF50-7062	.062		
	CL-MF50-7125	.125		

RISER CYLINDERS

1045 STEEL, BLACK OXIDE FINISH

Mini
Standard
Heavy

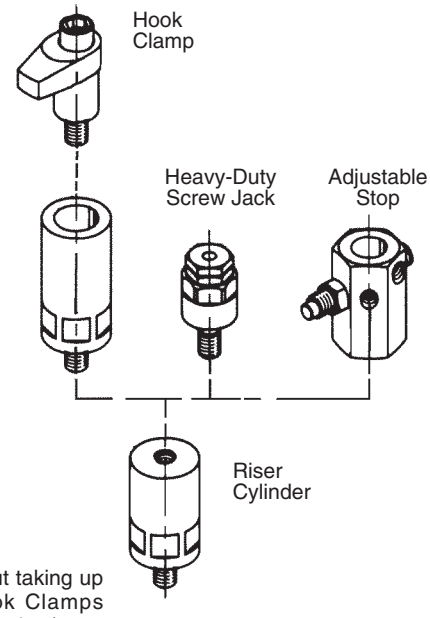

Provides additional height without taking up much space. Useful with Hook Clamps (page 59), Heavy-Duty Screw Jacks (page 48), and Adjustable Stops (page 48).

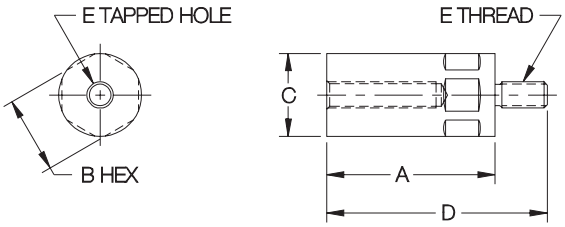

SIZE	PART NO.	A	B	C DIA	D	E
MINI	CL-MF25-5201	1-1/4	7/8	1	2	5/16-18
	CL-MF25-5202	1-1/2			2-1/4	
	CL-MF25-5203	2			2-3/4	
STANDARD	CL-MF40-5201	2	1-7/16	1-9/16	3-1/4	1/2-13
	CL-MF40-5203	3-1/8			4-3/8	
	CL-MF40-5204	4			5-1/4	
HEAVY	CL-MF50-5201	2	1-13/16	2	3-1/4	5/8-11
	CL-MF50-5203	3-1/8			4-3/8	
	CL-MF50-5204	4			5-1/4	

Carr Lane®
MANUFACTURING CO.
4200 Carr Lane Ct., P.O. Box 191970
St. Louis, Missouri 63119-7970 USA
Phone: 314-647-6200, FAX: 314-647-5736
Web Site: www.carrlane.com

(Rev. 3-07)

EDGE SUPPORTS

1045 STEEL, HEAT TREATED, BLACK OXIDE FINISH

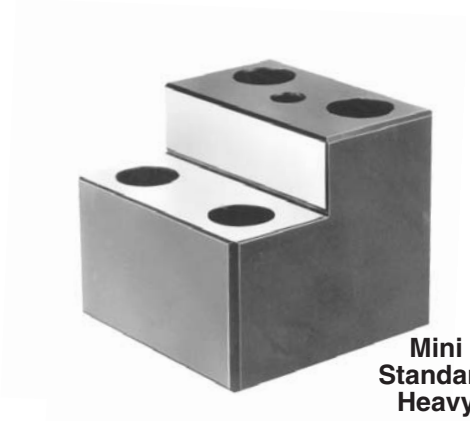

Single

Mini
Standard
Heavy

Double

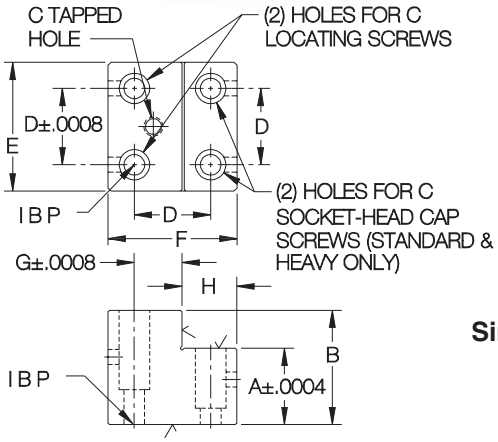

Single

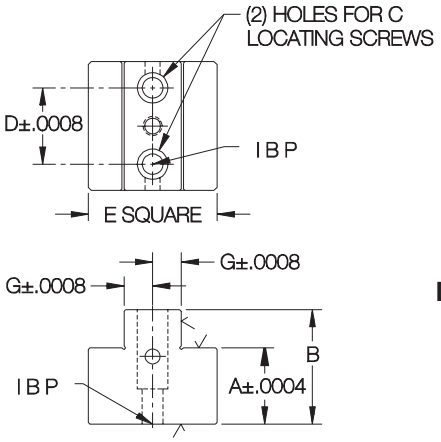

Double

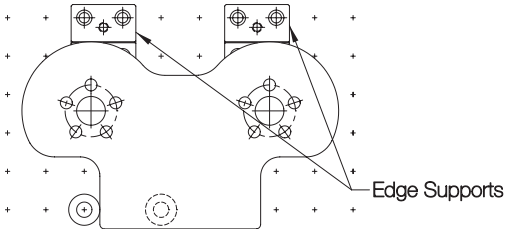

Precision edge locator with a ground step for simultaneous horizontal and vertical location. Large contact area is ideal for supporting heavy workpieces and locating curved surfaces. Available in many support heights to match other types of height locators. For additional height, use Multipurpose Riser Blocks (page 35).

SINGLE

SIZE	PART NO.	A	B	C	D	E	F	G	H	LOCATING SCREWS (2 REQD)	SOCKET-HEAD CAP SCREWS (0 OR 2 REQD)
MINI	CL-MF25-3700	.5000	1	5/16-18	1.0000	1-3/4	1-3/8	.5000	3/8	CL-MF25-4300+ CL-5/16-18x1.50-SHCS	—
	CL-MF25-3701	.7500	1-1/4								
	CL-MF25-3702	1.0000	1-1/2								
	CL-MF25-3703	1.2500	2								
STANDARD	CL-MF40-3701	.7500	1-3/4	1/2-13	2.0000	3-3/8	3-3/8	1.2500	1-7/16	CL-MF40-4302	CL-1/2-13x1.50-SHCS
	CL-MF40-3702	1.0000	2								CL-1/2-13x2.00-SHCS
	CL-MF40-3703	1.2500	2-1/4								
	CL-MF40-3704	1.5000	2-1/2								
	CL-MF40-3705	2.0000	3								
	CL-MF40-3706	2.5000	3-1/2								
	CL-MF40-3707	3.0000	4-1/2							CL-MF40-4303	CL-1/2-13x2.25-SHCS
	CL-MF40-3708	4.0000	5-1/2								
	CL-MF40-3709	5.0000	6-1/2								
HEAVY	CL-MF50-3701	1.0000	2	5/8-11	2.0000	3-3/8	3-3/8	1.2500	1-7/16	CL-MF50-4302	CL-5/8-11x2.00-SHCS
	CL-MF50-3702	1.2500	2-1/4								
	CL-MF50-3703	1.5000	2-1/2								
	CL-MF50-3704	2.0000	3								
	CL-MF50-3705	2.5000	3-1/2								
	CL-MF50-3706	3.0000	4-1/2							CL-MF50-4303	CL-5/8-11x2.00-SHCS
	CL-MF50-3707	4.0000	5-1/2								
	CL-MF50-3708	5.0000	6-1/2								

DOUBLE

SIZE	PART NO.	A	B	C	D	E	G	LOCATING SCREWS (2 REQD)
MINI	CL-MF25-3800	.5000	1	5/16-18	1.0000	1-3/4	.5000	CL-MF25-4300+ CL-5/16-18x1.50-SHCS
	CL-MF25-3801	.7500	1-1/4					
	CL-MF25-3802	1.0000	1-1/2					
	CL-MF25-3803	1.2500	2					
STANDARD	CL-MF40-3801	.7500	1-3/4	1/2-13	2.0000	3-3/8	.7500	CL-MF40-4302
	CL-MF40-3802	1.0000	2					
	CL-MF40-3803	1.2500	2-1/4					
	CL-MF40-3804	1.5000	2-1/2					
	CL-MF40-3805	2.0000	3					
	CL-MF40-3806	2.5000	3-1/2					
	CL-MF40-3807	3.0000	4-1/2					CL-MF40-4303
	CL-MF40-3808	4.0000	5-1/2					
	CL-MF40-3809	5.0000	6-1/2					
HEAVY	CL-MF50-3801	1.0000	2	5/8-11	2.0000	3-3/8	.7500	CL-MF50-4302
	CL-MF50-3802	1.2500	2-1/4					
	CL-MF50-3803	1.5000	2-1/2					
	CL-MF50-3804	2.0000	3					
	CL-MF50-3805	2.5000	3-1/2					
	CL-MF50-3806	3.0000	4-1/2					CL-MF50-4303
	CL-MF50-3807	4.0000	5-1/2					
	CL-MF50-3808	5.0000	6-1/2					

Carr Lane MANUFACTURING CO.
4200 Carr Lane Ct., P.O. Box 191970
St. Louis, Missouri 63119-7970 USA
Phone: 314-647-6200, FAX: 314-647-5736
Web Site: www.carrlane.com

(Rev. 3-07)

SUPPORT CYLINDERS

1045 OR 1144 STEEL, HEAT TREATED, BLACK OXIDE FINISH

Mini
Standard
Heavy

Extremely versatile precision locator that can be used either as a support or for side location. Ground on top, bottom, and outside diameter. Available in many support heights to match other types of height locators. For additional height, use Multipurpose Riser Blocks (page 35). To position between grid points, use a Multipurpose Extension Support (page 37).

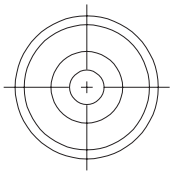

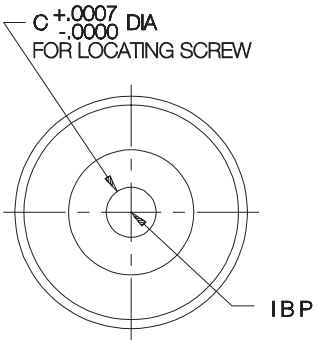

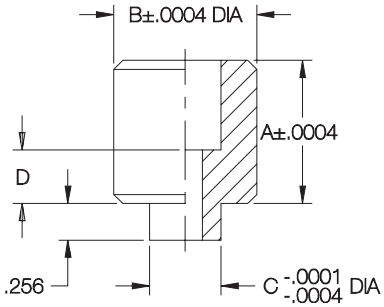

Mini

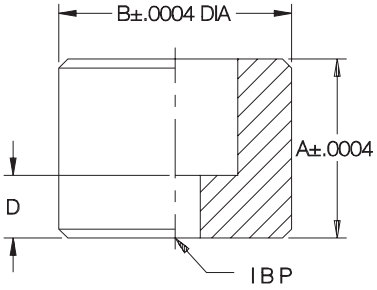

Standard
Heavy

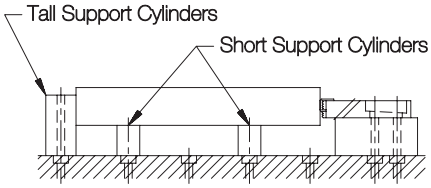

With the wide range of available heights, Support Cylinders can be used as both side locators and supports.

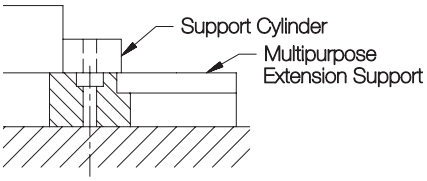

A Multipurpose Extension Support (page 37) can be used to mount a Support Cylinder anywhere between grid points.

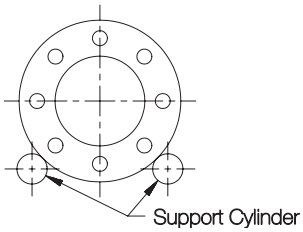

Two Support Cylinders can accurately locate a large diameter, similar to using a V Block.

SIZE	PART NO.	A	B DIA	C DIA	D	LOCATING SCREW (1 REQD)
MINI	CL-MF25-3101	.5000	1.0000	.5000	5/32	CL-5/16-18x1.00-SHCS
	CL-MF25-3102	.7500			3/8	CL-5/16-18x1.12-SHCS
	CL-MF25-3103	1.0000				
	CL-MF25-3104	1.2500				
	CL-MF25-3105	1.5000				
	CL-MF25-3106	2.0000				
	CL-MF25-3107	2.5000				
STANDARD	CL-MF40-3101	1.0000	1.6250	.5000	7/16	CL-MF40-4301
	CL-MF40-3112	1.2500				
	CL-MF40-3113	1.5000				
	CL-MF40-3102	2.0000				
	CL-MF40-3114	2.5000				
	CL-MF40-3103	3.0000				
	CL-MF40-3104	4.0000	2.0000		15/16	CL-MF40-4302
	CL-MF40-3115	4.5000				
	CL-MF40-3105	5.0000				
HEAVY	CL-MF50-3112	1.2500	2.0000	.6250	9/16	CL-MF50-4301
	CL-MF50-3113	1.5000				
	CL-MF50-3101	2.0000				
	CL-MF50-3114	2.5000			1-1/16	CL-MF50-4302
	CL-MF50-3102	3.0000				
	CL-MF50-3103	4.0000				
	CL-MF50-3115	4.5000				
	CL-MF50-3104	5.0000				

MANUFACTURING CO.
4200 Carr Lane Ct., P.O. Box 191970
St. Louis, Missouri 63119-7970 USA
Phone: 314-647-6200, FAX: 314-647-5736
Web Site: www.carrlane.com

(Rev. 3-07)

SHOULDER SUPPORT CYLINDERS

1045 OR 1144 STEEL, HEAT TREATED, BLACK OXIDE FINISH

Mini **Standard Heavy**

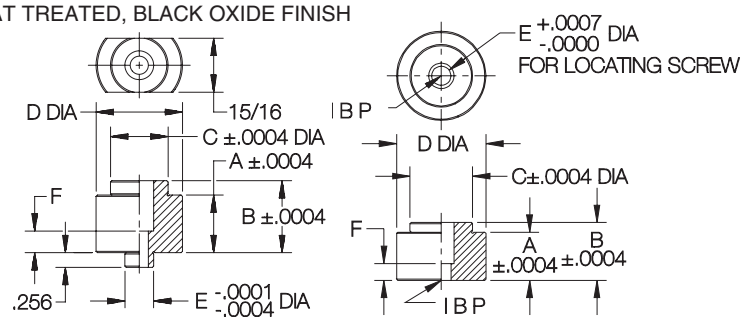

Mini **Standard and Heavy**

Precision edge locator with a ground shoulder for simultaneous horizontal and vertical location. Available in many support heights to match other types of height locators. For additional height, use Multipurpose Riser Blocks (page 35). To position between grid points, use a Multipurpose Extension Support (page 39).

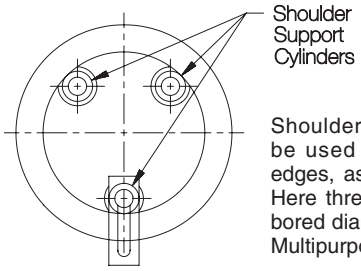

Shoulder Support Cylinders can be used to locate from internal edges, as well as external edges. Here three of them locate a large bored diameter, one mounted on a Multipurpose Extension Support.

SIZE	PART NO.	A	B	C DIA	D DIA	E DIA	F	LOCATING SCREW (1 REQD)
MINI	CL-MF25-3200	.5000	.7500	1.0000	1-1/2	.5000	3/8	CL-5/16-18x1.12-SHCS
	CL-MF25-3201	.7500	1.0000					
	CL-MF25-3202	1.0000	1.2500					
	CL-MF25-3203	1.2500	1.5000					
	CL-MF25-3204	1.5000	2.0000					
	CL-MF25-3205	2.0000	2.5000					
	CL-MF25-3206	2.5000	3.0000					
STANDARD	CL-MF40-3201	.7500	1.0000	1.6250	2-5/16	.5000	7/16	CL-MF40-4301
	CL-MF40-3202	1.0000	1.2500					
	CL-MF40-3203	1.2500	1.5000					
	CL-MF40-3204	1.5000	2.0000					
	CL-MF40-3205	2.0000	2.5000					
	CL-MF40-3206	2.5000	3.0000					
	CL-MF40-3207	3.0000	4.0000				15/16	CL-MF40-4302
	CL-MF40-3208	4.0000	5.0000					
HEAVY	CL-MF50-3201	1.0000	1.2500	2.0000	2-7/8	.6250	9/16	CL-MF50-4301
	CL-MF50-3202	1.2500	1.5000					
	CL-MF50-3203	1.5000	2.0000					
	CL-MF50-3204	2.0000	2.5000					
	CL-MF50-3205	2.5000	3.0000					
	CL-MF50-3206	3.0000	4.0000				1-1/16	CL-MF50-4302
	CL-MF50-3207	4.0000	5.0000					

RELIEVED SUPPORT CYLINDERS

1045 OR 1144 STEEL, HEAT TREATED, BLACK OXIDE FINISH

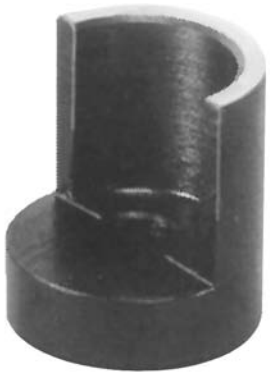

Mini Standard Heavy

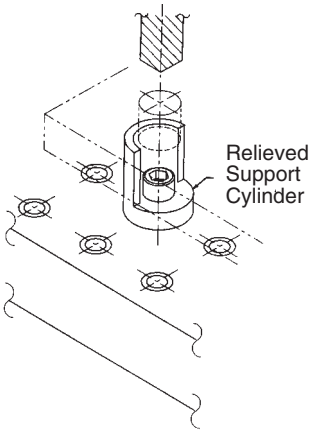

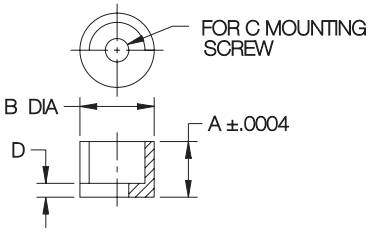

Ideal support underneath a drilled hole. This precision height locator provides full support, yet allows for drill clearance and chip cleanout. Available in many support heights to match other types of height locators. For additional height, use Support Riser Blocks (page 35). To position between grid points, use an Extension Support (page 36).

SIZE	PART NO.	A	B	C	D	SOCKET-HEAD CAP SCREW (1 REQD)
MINI	CL-MF25-3151	.7500	1	5/16-18	3/16	CL-5/16-18x1.00-SHCS
	CL-MF25-3152	1.0000			5/16	CL-5/16-18x1.12-SHCS
	CL-MF25-3153	1.2500				
	CL-MF25-3154	1.5000				
	CL-MF25-3155	2.0000				
STANDARD	CL-MF40-3152	1.0000	1-5/8	1/2-13	3/16	CL-1/2-13x1.25-SHCS
	CL-MF40-3153	1.2500			5/16	CL-1/2-13x1.50-SHCS
	CL-MF40-3154	1.5000			7/16	
	CL-MF40-3155	2.0000				
HEAVY	CL-MF50-3153	1.2500	2	5/8-11	5/16	CL-5/8-11x2.00-SHCS
	CL-MF50-3154	1.5000			7/16	
	CL-MF50-3155	2.0000				

Carr Lane®
MANUFACTURING CO.
4200 Carr Lane Ct., P.O. Box 191970
St. Louis, Missouri 63119-7970 USA
Phone: 314-647-6200, FAX: 314-647-5736
Web Site: www.carrlane.com

(Rev. 3-07)

LOCATING-PIN ADAPTORS

CARBON STEEL, HEAT TREATED, BLACK OXIDE FINISH
PATENT NO. 4,834,358

Mini
Standard
Heavy

Fixed

Adjustable

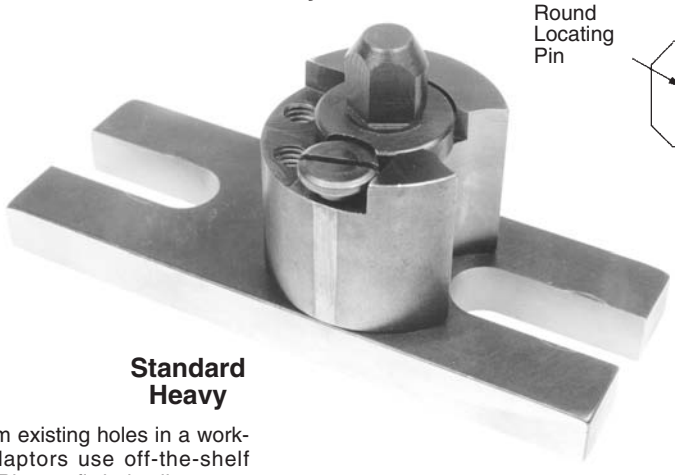

Standard
Heavy

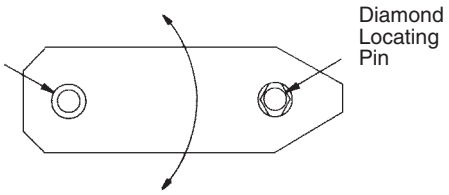

Round and Diamond Locating Pins are frequently used together for proper workpiece location without binding. The Round Locating Pin is usually mounted in the fixed adaptor.

Extremely useful for locating from existing holes in a workpiece. These Locating-Pin Adaptors use off-the-shelf Round and Diamond Locating Pins to fit hole diameters exactly. Fixed adaptors mount at grid points in multipurpose holes, to maintain full positional accuracy. To adjust for hole spacing, a second fixed adaptor can be mounted between grid points using a Multipurpose Extension Support (page 37). An adjustable-type adaptor can also be used if lower height is required. Note: Locating pins mounted between grid points must be indicated into correct x-and-y-axis position during mounting.

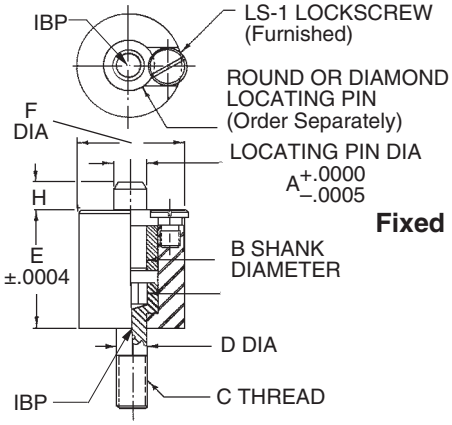

Fixed

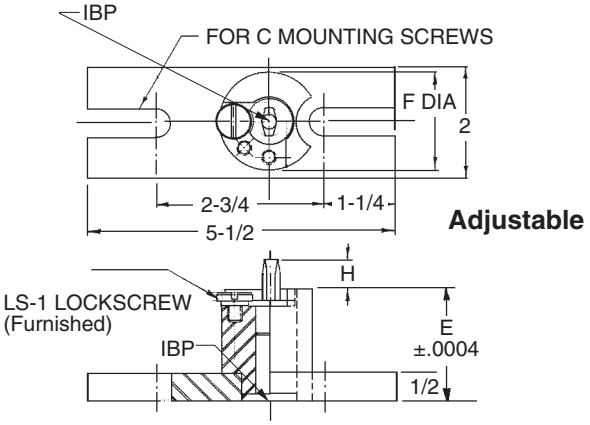

Adjustable

FIXED

SIZE	PART NO.	A LOCATING PIN DIA RANGE	B LOCATING PIN SHANK DIA	C	D DIA	E	F	H
MINI	CL-MF25-4101	1/8 to 5/16	5/16	5/16-18	.5000	1.5000	1-1/2	13/32
	CL-MF25-4102					2.5000		
	CL-MF25-4103	5/16 to 1/2	1/2			1.5000	1-3/4	15/32
	CL-MF25-4104					2.5000		
STANDARD	CL-MF40-4101	1/8 to 5/16	5/16	1/2-13	.5000	1.5000	1-1/2	13/32
	CL-MF40-4102					2.0000		
	CL-MF40-4111					2.5000		
	CL-MF40-4112					3.0000		
	CL-MF40-4113					4.0000		
	CL-MF40-4103	5/16 to 1/2	1/2			2.0000	1-3/4	15/32
	CL-MF40-4104					2.5000		
	CL-MF40-4114					3.0000		
	CL-MF40-4115					4.0000		
	CL-MF40-4105	1/2 to 3/4	3/4			2.0000	2	21/32
	CL-MF40-4106					2.5000		
	CL-MF40-4116					3.0000		
	CL-MF40-4117					4.0000		
HEAVY	CL-MF50-4101	1/8 to 5/16	5/16	5/8-11	.6250	1.5000	1-1/2	13/32
	CL-MF50-4102					2.0000		
	CL-MF50-4103	5/16 to 1/2	1/2			2.0000	1-3/4	15/32
	CL-MF50-4104					2.5000		
	CL-MF50-4105	1/2 to 3/4	3/4			2.0000	2	21/32
	CL-MF50-4106					2.5000		

ADJUSTABLE

SIZE	PART NO.	A LOCATING PIN DIA RANGE	B LOCATING PIN SHANK DIA	C	E	F DIA	H	SOCKET-HEAD CAP SCREWS (2 REQD)
STANDARD	CL-MF40-4201	1/8 to 5/16	5/16	1/2-13	1.5000	1-1/2	13/32	CL-1/2-13x1.75-SHCS
	CL-MF40-4202				2.0000			
	CL-MF40-4203	5/16 to 1/2	1/2		2.0000	1-3/4	15/32	
	CL-MF40-4204				2.5000			
	CL-MF40-4205	1/2 to 3/4	3/4		2.0000	2	21/32	
	CL-MF40-4206				2.5000			
HEAVY	CL-MF50-4201	1/8 to 5/16	5/16	5/8-11	1.5000	1-1/2	13/32	CL-5/8-11x2.00-SHCS
	CL-MF50-4202				2.0000			
	CL-MF50-4203	5/16 to 1/2	1/2		2.0000	1-3/4	15/32	
	CL-MF50-4204				2.5000			
	CL-MF50-4205	1/2 to 3/4	3/4		2.0000	2	21/32	
	CL-MF50-4206				2.5000			

Carr Lane®
MANUFACTURING CO.
4200 Carr Lane Ct., P.O. Box 191970
St. Louis, Missouri 63119-7970 USA
Phone: 314-647-6200, FAX: 314-647-5736
Web Site: www.carrlane.com

(Rev. 3-07)

LOCATING-PIN ADAPTORS

CARBON STEEL, HEAT TREATED, BLACK OXIDE FINISH
PATENT NO. 4,834,358

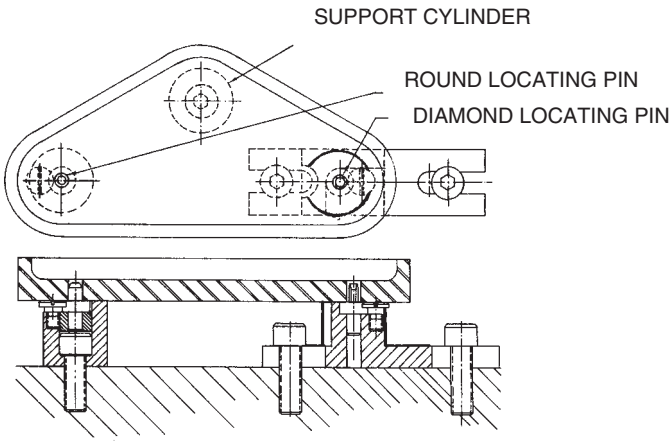

Locating-Pin Adaptors are precision ground on top and bottom to provide accurate height location. Usually just one additional rest is required for full three-point support.

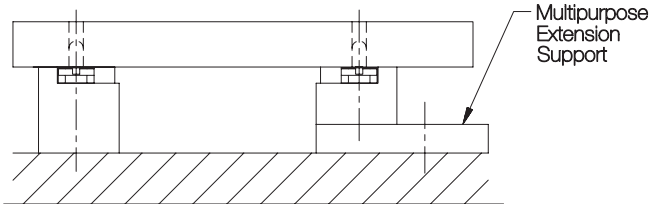

To mount a Fixed Locating-Pin Adaptor between grid points, use a Multipurpose Extension Support (page 37). Alternatively, an Adjustable Locating-Pin Adaptor could be used for lower height (standard and heavy sizes only).

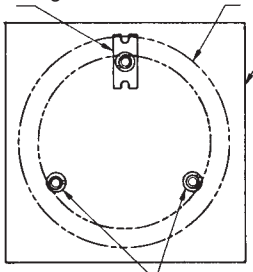

Three locating pins can be used in combination to locate workpieces with large internal diameters.

For additional locating-pin dimensions, see pages 168-171 of tooling-component catalog section. Special head diameters (A dimensions) are readily available.

Round Locating Pin

Diamond Locating Pin

5/16" SHANK STOCK PIN DIAMETERS USA

ROUND PIN PART NO.	DIAMOND PIN PART NO.	HEAD DIA (A) NOMINAL	HEAD DIA (A) ACTUAL
CL-123-RLT	CL-123-DLT	1/8	.1235
CL-124-RLT	CL-124-DLT		.1245
CL-154-RLT	CL-154-DLT	5/32	.1548
CL-155-RLT	CL-155-DLT		.1558
CL-186-RLT	CL-186-DLT	3/16	.1860
CL-187-RLT	CL-187-DLT		.1870
CL-217-RLT	CL-217-DLT	7/32	.2173
CL-218-RLT	CL-218-DLT		.2183
CL-248-RLT	CL-248-DLT	1/4	.2485
CL-249-RLT	CL-249-DLT		.2495
CL-279-RLT	CL-279-DLT	9/32	.2798
CL-280-RLT	CL-280-DLT		.2808
CL-311-RLT	CL-311-DLT	5/16	.3110
CL-312-RLT	CL-312-DLT		.3120

METRIC

CL-5-RLT-.2347	CL-5-DLT-.2347	6mm	.2347
CL-5-RLT-.2357	CL-5-DLT-.2357		.2357

1/2" SHANK STOCK PIN DIAMETERS USA

ROUND PIN PART NO.	DIAMOND PIN PART NO.	HEAD DIA (A) NOMINAL	HEAD DIA (A) ACTUAL
CL-310-RLT	CL-310-DLT	5/16	.3105
CL-3115-RLT	CL-3115-DLT		.3115
CL-341-RLT	CL-341-DLT	11/32	.3418
CL-342-RLT	CL-342-DLT		.3428
CL-373-RLT	CL-373-DLT	3/8	.3730
CL-374-RLT	CL-374-DLT		.3740
CL-404-RLT	CL-404-DLT	13/32	.4043
CL-405-RLT	CL-405-DLT		.4053
CL-435-RLT	CL-435-DLT	7/16	.4355
CL-436-RLT	CL-436-DLT		.4365
CL-466-RLT	CL-466-DLT	15/32	.4668
CL-467-RLT	CL-467-DLT		.4678
CL-498-RLT	CL-498-DLT	1/2	.4980
CL-499-RLT	CL-499-DLT		.4990

METRIC

CL-8-RLT-.3130	CL-8-DLT-.3130	8mm	.3130
CL-8-RLT-.3140	CL-8-DLT-.3140		.3140
CL-8-RLT-.3917	CL-8-DLT-.3917	10mm	.3917
CL-8-RLT-.3927	CL-8-DLT-.3927		.3927
CL-8-RLT-.4704	CL-8-DLT-.4704	12mm	.4704
CL-8-RLT-.4714	CL-8-DLT-.4714		.4714

3/4" SHANK STOCK PIN DIAMETERS USA

ROUND PIN PART NO.	DIAMOND PIN PART NO.	HEAD DIA (A) NOMINAL	HEAD DIA (A) ACTUAL
CL-4980-RLT	CL-4980-DLT	1/2	.4980
CL-4990-RLT	CL-4990-DLT		.4990
CL-529-RLT	CL-529-DLT	17/32	.5293
CL-530-RLT	CL-530-DLT		.5303
CL-560-RLT	CL-560-DLT	9/16	.5605
CL-561-RLT	CL-561-DLT		.5615
CL-591-RLT	CL-591-DLT	19/32	.5918
CL-592-RLT	CL-592-DLT		.5928
CL-623-RLT	CL-623-DLT	5/8	.6230
CL-624-RLT	CL-624-DLT		.6240
CL-654-RLT	CL-654-DLT	21/32	.6543
CL-655-RLT	CL-655-DLT		.6553
CL-685-RLT	CL-685-DLT	11/16	.6855
CL-686-RLT	CL-686-DLT		.6865
CL-716-RLT	CL-716-DLT	23/32	.7168
CL-717-RLT	CL-717-DLT		.7178
CL-748-RLT	CL-748-DLT	3/4	.7480
CL-749-RLT	CL-749-DLT		.7490

METRIC

CL-12-RLT-.5492	CL-12-DLT-.5492	14mm	.5492
CL-12-RLT-.5502	CL-12-DLT-.5502		.5502
CL-12-RLT-.6279	CL-12-DLT-.6279	16mm	.6279
CL-12-RLT-.6289	CL-12-DLT-.6289		.6289
CL-12-RLT-.7067	CL-12-DLT-.7067	18mm	.7067
CL-12-RLT-.7077	CL-12-DLT-.7077		.7077

Carr Lane MANUFACTURING CO.
4200 Carr Lane Ct., P.O. Box 191970
St. Louis, Missouri 63119-7970 USA
Phone: 314-647-6200, FAX: 314-647-5736
Web Site: www.carrlane.com

(Rev. 10-07)

SCREW REST PADS

1144 STEEL, HEAT TREATED, BLACK OXIDE FINISH

Mini
Standard
Heavy

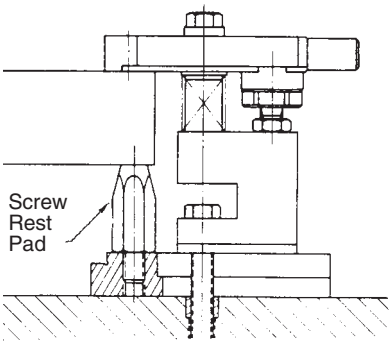

Precision height locator with a small contact area. Available in a wide range of heights, including very short sizes. This support can be installed in either a plain tapped hole or a multipurpose hole. For metric sizes, see page 159 of tooling-component catalog section.

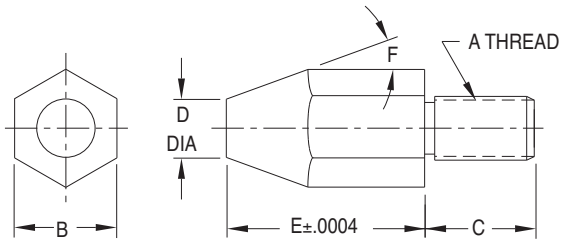

SIZE	PART NO.	A	B	C	D DIA	E	F
MINI	CL-MF25-4801	5/16-18	3/4	5/8	5/16	.2500	75°
	CL-MF25-4802					.3750	60°
	CL-MF25-4803					.5000	35°
	CL-MF25-4804					.7500	25°
	CL-MF25-4805					1.0000	20°
	CL-MF25-4806					1.2500	15°
	CL-MF25-4807					1.5000	
STANDARD	CL-MF40-4801	1/2-13	7/8	15/16	1/2	.2500	75°
	CL-MF40-4802					.3750	60°
	CL-MF40-4803					.5000	35°
	CL-MF40-4804					.7500	25°
	CL-MF40-4805					1.0000	20°
	CL-MF40-4806					1.2500	15°
	CL-MF40-4807					1.5000	
	CL-MF40-4808					2.0000	
HEAVY	CL-MF50-4801	5/8-11	1	1-1/4	5/8	.2500	75°
	CL-MF50-4802					.3750	60°
	CL-MF50-4803					.5000	35°
	CL-MF50-4804					.7500	25°
	CL-MF50-4805					1.0000	20°
	CL-MF50-4806					1.2500	15°
	CL-MF50-4807					1.5000	
	CL-MF50-4808					2.0000	

VERTICAL V BLOCKS

1045 STEEL, HEAT TREATED, BLACK OXIDE FINISH

Standard
Heavy

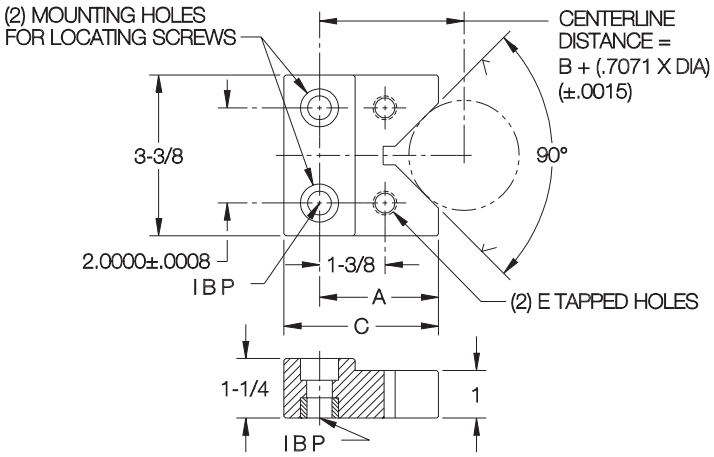

Ideal for mounting a cylindrical workpiece with its axis perpendicular to the tooling surface. Locating surfaces are precision ground and accurately qualified with respect to the mounting holes.

SIZE	PART NO.	WORKPIECE DIAMETER RANGE	A	B	C	E	LOCATING SCREWS (2 REQD)
STANDARD	CL-MF40-6101	9/16 to 3-1/8	2-1/2	1.3951	3-1/4	1/2-13	CL-MF40-4302
HEAVY	CL-MF50-6101	9/16 to 3-1/8	2-1/2	1.3951	3-1/4	5/8-11	CL-MF50-4302

MANUFACTURING CO.
4200 Carr Lane Ct., P.O. Box 191970
St. Louis, Missouri 63119-7970 USA
Phone: 314-647-6200, FAX: 314-647-5736
Web Site: www.carrlane.com

(Rev. 3-07)

HORIZONTAL V BLOCKS

1045 STEEL, HEAT TREATED, BLACK OXIDE FINISH

Small V

Mini (2 Holes)
Standard (2 Holes)
Heavy (2 Holes)

Large V

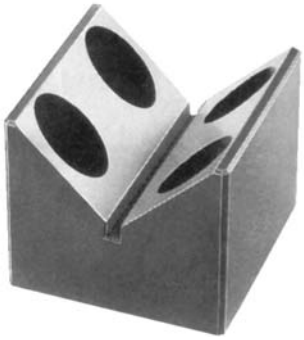

Mini (4 Holes)
Standard (2 Holes)
Heavy (2 Holes)

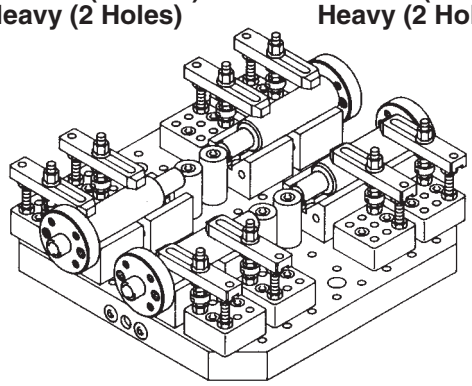

In the above example, Support Cylinders are used as end stops for shafts located in Horizontal V Blocks.

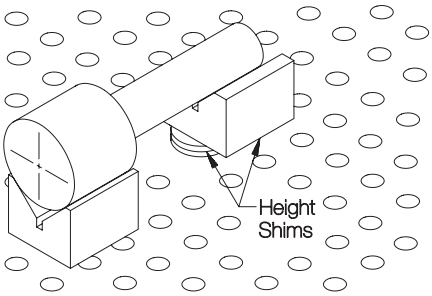

To locate a workpiece from two different diameters simultaneously, use Height Shims (page 38) and/or Multipurpose Riser Blocks (page 35) to raise one V block to the proper level.

Extremely versatile locator for cylindrical workpieces. Locating surface is precision ground and accurately qualified with respect to the mounting holes. Two tapped holes in the side (standard and heavy sizes only) can be used to mount end stops or clamps. Available in two types: one for small diameters, and one for larger diameters.

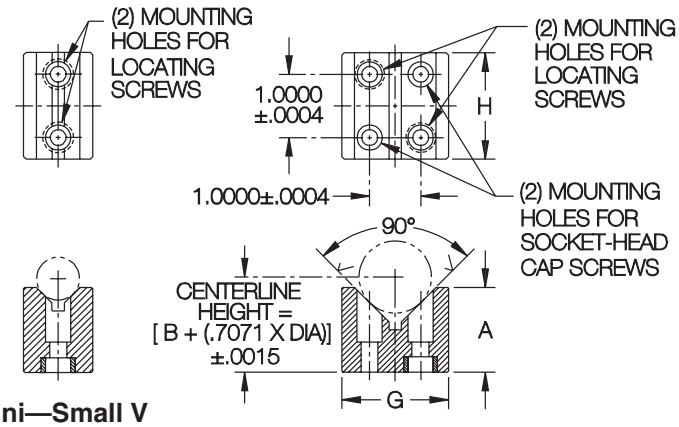

Mini—Small V

Mini—Large V

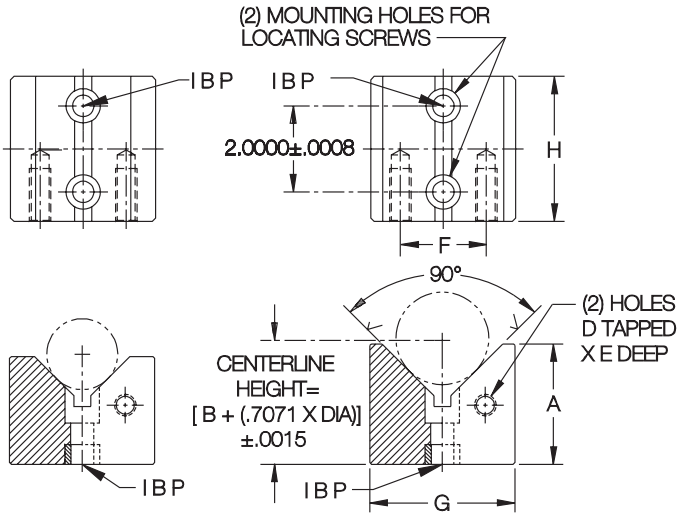

Standard—Small V
Heavy—Small V

Standard—Large V
Heavy—Large V

SMALL V

SIZE	PART NO.	WORKPIECE DIAMETER RANGE	A	B	D	E	F	G	H	LOCATING SCREWS (2 REQD)	SOCKET-HEAD CAP SCREWS (0 OR 2 REQD)
MINI	CL-MF25-6001	3/8 to 1	1-1/4	.8750	—	—	—	1	1-3/4	CL-MF25-4300 + CL-5/16-18x1.38-SHCS	—
STANDARD	CL-MF40-6001	9/16 to 3-1/8	2-1/2	1.3951	1/2-13	1-1/8	2	3-3/8	3-3/8	CL-MF40-4302	—
HEAVY	CL-MF50-6001	9/16 to 3-1/8	2-1/2	1.3951	5/8-11	1-3/8	2	3-3/8	3-3/8	CL-MF50-4302	—

LARGE V

MINI	CL-MF25-6002	9/16 to 2	1-1/2	.7500	—	—	—	1-3/4	1-3/4	CL-MF25-4300 + CL-5/16-18x1.38-SHCS	CL-5/16-18x1.38-SHCS
STANDARD	CL-MF40-6002	9/16 to 4	3	1.5858	1/2-13	1-1/8	2	3-3/8	3-3/8	CL-MF40-4302	—
HEAVY	CL-MF50-6002	9/16 to 4	3	1.5858	5/8-11	1-3/8	2	3-3/8	3-3/8	CL-MF50-4302	—

Carr Lane MANUFACTURING CO.
4200 Carr Lane Ct., P.O. Box 191970
St. Louis, Missouri 63119-7970 USA
Phone: 314-647-6200, FAX: 314-647-5736
Web Site: www.carrlane.com

(Rev. 3-07)

HEAVY-DUTY SCREW JACKS

JACK SCREW: 4135 STEEL, HEAT TREATED, BLACK OXIDE FINISH
TIP: 1144 OR 1045 STEEL, HEAT TREATED, BLACK OXIDE FINISH
BODY: 1045 STEEL, BLACK OXIDE FINISH

Standard Heavy

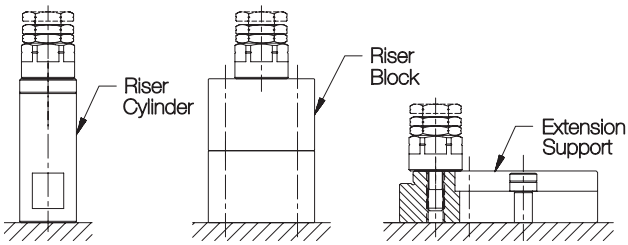

For additional height and/or mounting between grid points, use Riser Cylinders (page 38), Support Riser Blocks (page 35), or Extension Supports (page 36).

Heavy-duty adjustable support that accepts any of the three tips shown below. Choice of three heights in each size cover the full range of height possibilities. See page 164 of tooling-component catalog section for additional dimensions and additional sizes.

SCREW JACKS

SIZE	PART NO.	MOUNTING SCREW SIZE	OUTSIDE DIAMETER	RETRACTED HEIGHT	MAX SCREW TRAVEL
STANDARD	CL-MF40-3401	1/2-13	1-9/16	1-5/8	3/8
	CL-MF40-3402			2	3/4
	CL-MF40-3403			2-3/4	1-1/2
HEAVY	CL-MF50-3401	5/8-11	1-9/16	1-5/8	3/8
	CL-MF50-3402			2	3/4
	CL-MF50-3403			2-3/4	1-1/2

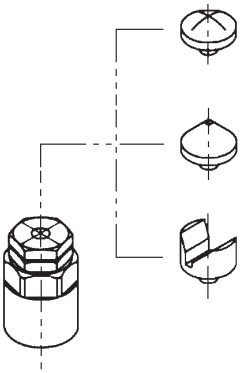

Radius Tip

Conical Tip

V-Shaped Tip

SCREW-JACK TIPS

SIZE	PART NO.	TYPE	OUTSIDE DIAMETER	OVERALL TIP HEIGHT
ALL	CL-MF10-3501	RADIUS	1-3/16	3/8
	CL-MF10-3502	CONICAL		11/16
	CL-MF10-3503	V-SHAPED		11/16

KNURLED SCREW JACKS

12L14 STEEL, CARBURIZED-HARDENED, BLACK OXIDE FINISH

Mini Standard Heavy

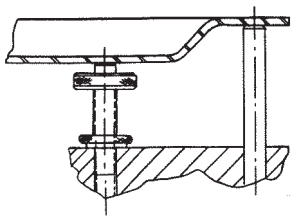

Knurled head allows quick, easy finger adjustment. Order Check Nut separately. See page 117 of tooling-component catalog section for additional dimensions and sizes.

SIZE	KNURLED SCREW JACK PART NO.	CHECK NUT PART NO.	THREAD SIZE	LENGTH UNDER HEAD
MINI	CL-0-KSJ	CL-51618-TSJN	5/16-18	1-5/8
STANDARD	CL-7-KSJ	CL-1213-TSJN	1/2-13	2-1/2
HEAVY	CL-10-KSJ	CL-5811-TSJN	5/8-11	2-1/2

Carr Lane®
MANUFACTURING CO.
4200 Carr Lane Ct., P.O. Box 191970
St. Louis, Missouri 63119-7970 USA
Phone: 314-647-6200, FAX: 314-647-5736
Web Site: www.carrlane.com

(Rev. 9-07)

MANUAL WORK SUPPORTS

BODY & PLUNGER: CARBON STEEL, CASE HARDENED, BLACK OXIDE FINISH
HANDLE: ZINC DIE CASTING, ENAMEL PAINT

Mini
Standard
Heavy

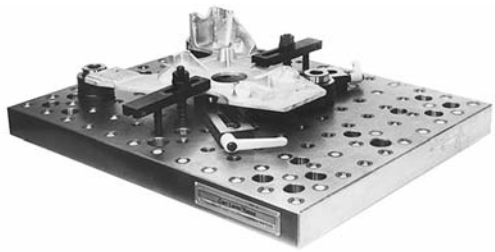

Ideal for supporting in hard-to-reach places, such as underneath this casting. Work supports can be positioned to allow convenient handle access.

Spring-extended manual work support with an extremely low profile. Plunger is locked at proper height by tightening handle. If desired, lock plunger in retracted position for easier loading of light parts, then release and retighten to extend and support. Adjustable handle can be reset to any convenient angle. See page 162 of tooling-component catalog section for complete dimensions.

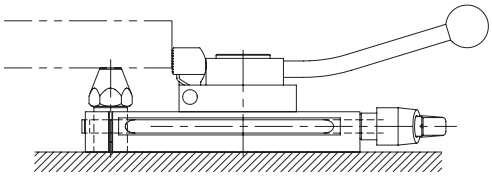

A Screw Rest Pad (page 44), available from 1/4" to 2" tall, is an ideal contact bolt to use in the support plunger. For an adjustable contact screw, use a Knurled Screw Jack (page 46). The mounting slot allows stacking other components, such as this Cam Edge Clamp, on top of the support.

SIZE	PART NO.	TAPPED HOLE IN PLUNGER	HEIGHT WITH PLUNGER FULLY RETRACTED	MAX PLUNGER STROKE	DISTANCE FROM PLUNGER TO SLOT	SLOT LENGTH	SOCKET-HEAD CAP SCREW (1 REQD.)
MINI	CL-MF25-5701	5/16-18	.709	.118	1-1/16	1-3/8	CL-5/16-18x1.12-SHCS
STANDARD	CL-MF40-5701	1/2-13	.945	.236	1-9/16	3-9/16	CL-1/2-13x1.50-SHCS
HEAVY	CL-MF50-5701	5/8-11	1.339	.433	1-3/4	3-15/16	CL-5/8-11x2.00-SHCS

TORQUE SCREW JACKS

12L14 STEEL, BLACK OXIDE FINISH

Mini
Standard
Heavy

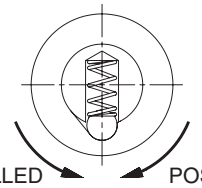

CONTROLLED TORQUE COUNTERCLOCKWISE

POSITIVE RETRACTION CLOCKWISE

A knurled-head screw jack that declutches at a preset torque. When the indicated end force is reached, the head disengages and turns freely. This eliminates the possibility of exerting excess force on thinwall parts. Knurled check nut is furnished. See page 145 of tooling-component catalog section for complete dimensions and additional sizes.

SIZE	PART NO.	THREAD SIZE	END FORCE (LBS)	LENGTH UNDER HEAD
MINI	CL-4A-TSJ	5/16-18	14-16	1-3/4
STANDARD	CL-6-TSJ	1/2-13	18-20	1-3/4
HEAVY	CL-8-TSJ	5/8-11	20-22	1-3/4

CarrLane®
MANUFACTURING CO.
4200 Carr Lane Ct., P.O. Box 191970
St. Louis, Missouri 63119-7970 USA
Phone: 314-647-6200, FAX: 314-647-5736
Web Site: www.carrlane.com

(Rev. 3-07)

ADJUSTABLE STOPS

BOLT: 4135 OR 1144 STEEL, HEAT TREATED, BLACK OXIDE FINISH
BODY: 1045 OR 1018 STEEL, BLACK OXIDE FINISH

Mini
Standard
Heavy

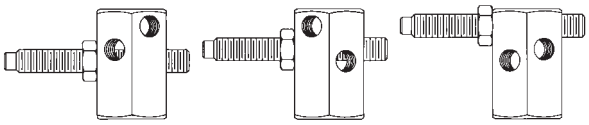

Three tapped crossholes allow setting the stop at different heights.

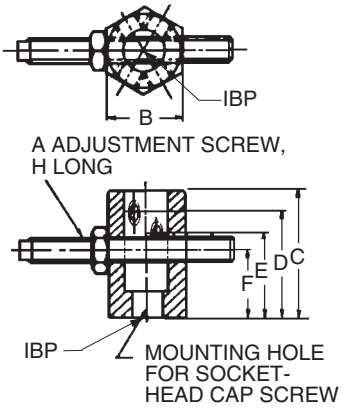

Versatile side stop with an adjustment screw that can be mounted at three different heights. For additional height, mount the Adjustable Stop on top of a Riser Cylinder (page 38) or Support Riser Block (page 35). To mount sideways, use a Sideways Mounting Block (page 34).

SIZE	PART NO.	A	B	C	D	E	F	H	SOCKET-HEAD CAP SCREW (1 REQD)
MINI	CL-MF25-2901	5/16-18	7/8	1-5/8	1-1/4	1	3/4	2	CL-5/16-18x1.00-SHCS
STANDARD	CL-MF40-2901	1/2-13	1-1/2	2-3/8	2	1-1/2	1-1/4	4	CL-1/2-13x1.50-SHCS
HEAVY	CL-MF50-2901	5/8-11	1-7/8	3-1/8	2-1/2	2	1-1/2	4	CL-5/8-11x2.00-SHCS

ADJUSTABLE SWING STOPS

BOLT: 4135 OR 1144 STEEL, HEAT TREATED, BLACK OXIDE FINISH
BODY: 1045 OR 1018 STEEL, BLACK OXIDE FINISH

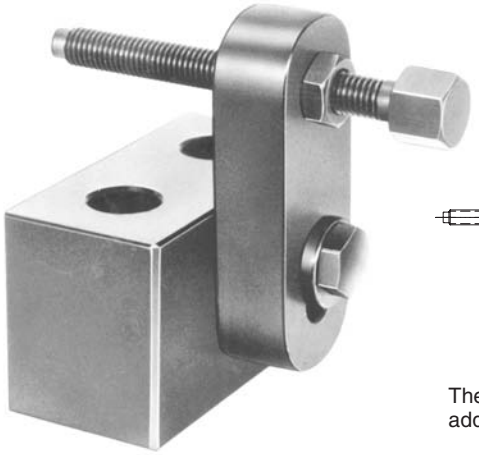

Standard
Heavy

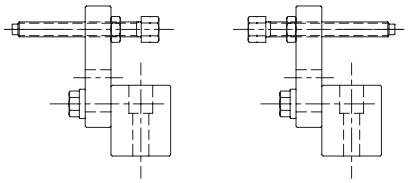

The contact screw can be reversed for additional mounting versatility.

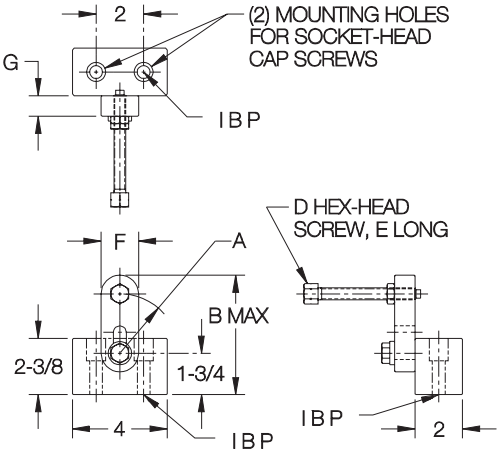

An adjustable side stop with considerable adjustment range. The long swing arm can be set at any angle, and is slotted to increase or decrease swing radius. Also, the arm can be swung out of the way after loading if desired.

SIZE	PART NO.	A	B	D	E	F	G	SOCKET-HEAD CAP SCREW (2 REQD)
STANDARD	CL-MF40-1801	2 to 2-1/2	5	1/2-13	4-3/8	1-9/16	7/8	CL-1/2-13x2.75-SHCS
	CL-MF40-1802	2-1/2 to 3-1/8	5-5/8					
	CL-MF40-1803	3-1/8 to 4	6-1/2					
HEAVY	CL-MF50-1801	2 to 2-1/2	5-1/4	5/8-11	4-3/8	1-3/4	1	CL-5/8-11x3.00-SHCS
	CL-MF50-1802	2-1/2 to 3-1/8	5-7/8					
	CL-MF50-1803	3-1/8 to 4	6-3/4					

Carr Lane®
MANUFACTURING CO.
4200 Carr Lane Ct., P.O. Box 191970
St. Louis, Missouri 63119-7970 USA
Phone: 314-647-6200, FAX: 314-647-5736
Web Site: www.carrlane.com

(Rev. 8-98)

SPRING-STOP-BUTTON ADAPTORS

CARBON STEEL, HEAT TREATED, BLACK OXIDE FINISH
PATENT NO. 4,832,325

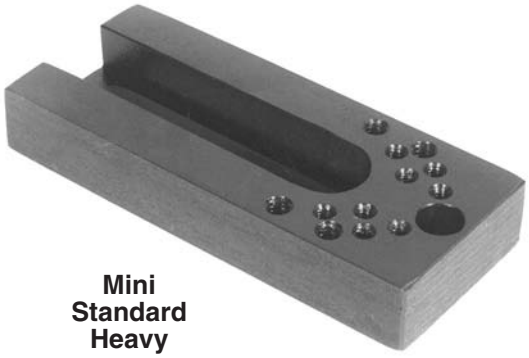

Mini
Standard
Heavy

Versatile adaptor for standard Spring Stop Buttons and Spring Locating Pins. Applies spring pressure to the workpiece to hold it against its locators. Fits three sizes of Spring Stop Buttons (one in mini size), both round and flat face, and two sizes of Spring Locating Pins.

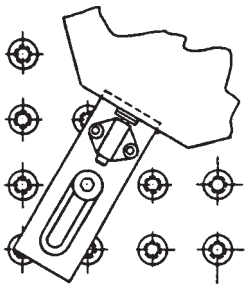

MOUNTING OPTIONS

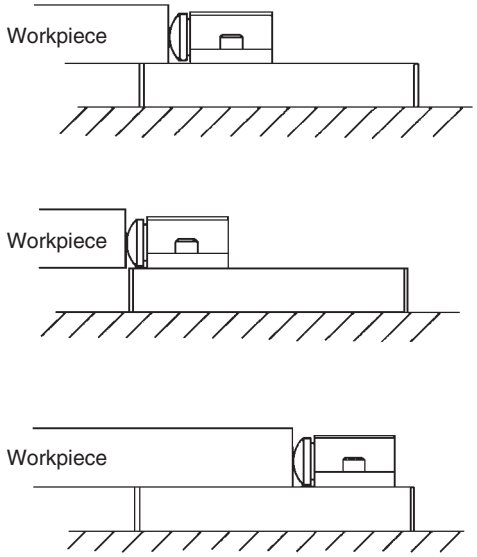

The adaptor can be used three ways:

1. As a height-locating point. Use rear mounting holes.
2. Without height locating. Use front mounting holes.
3. Reverse mounting. Use as a height-locating point with most of adaptor under workpiece.

Round-Face Spring Stop Buttons

Flat-Face Spring Stop Buttons

Spring Locating Pins

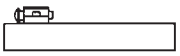

CL-10A-SSB

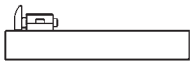

CL-10C-SSB

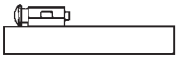

CL-20A-SSB

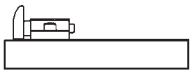

CL-20C-SSB

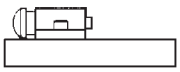

CL-30A-SSB

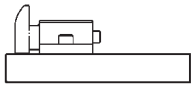

CL-30C-SSB

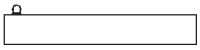

CL-7-SLP-1 Light
CL-7-SLP-2 Medium
CL-7-SLP-3 Heavy

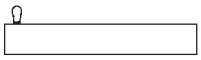

CL-7A-SLP-1 Light
CL-7A-SLP-2 Medium
CL-7A-SLP-3 Heavy

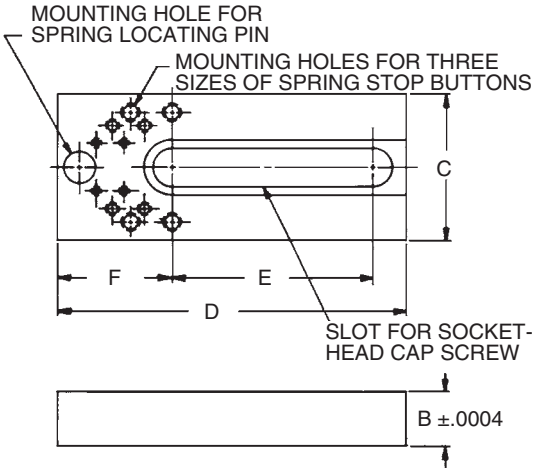

SIZE	PART NO.	FITS ROUND FACE STOP BUTTONS	FITS FLAT FACE STOP BUTTONS	FITS SPRING LOCATING PINS	B	C	D	E	F	SOCKET-HEAD CAP SCREW (1 REQD)	SOCKET-HEAD CAP SCREWS FOR SPRING STOP BUTTONS (2 REQD) SMALL	MEDIUM	LARGE
MINI	CL-MF25-3901	CL-10A-SSB	CL-10C-SSB	CL-7-SLP-1 CL-7-SLP-2 CL-7-SLP-3 CL-7A-SLP-1 CL-7A-SLP-2 CL-7A-SLP-3	.5000	1	3	1-7/16	1-5/16	CL-5/16-18x1.00-SHCS	CL-6-32x.50-SHCS	—	—
STANDARD	CL-MF40-3901	CL-10A-SSB CL-20A-SSB CL-30A-SSB	CL-10C-SSB CL-20C-SSB CL-30C-SSB		.7500	2	4-3/4	2-3/4	1-9/16	CL-1/2-13x1.25-SHCS	CL-6-32x.50-SHCS	CL-10-32x.50-SHCS	CL-1/4-20x.75-SHCS
	CL-MF40-3902				1.0000					CL-1/2-13x1.50-SHCS			
	CL-MF40-3903				1.2500					CL-1/2-13x1.75-SHCS			
	CL-MF40-3904				1.5000					CL-1/2-13x2.00-SHCS			
HEAVY	CL-MF50-3901	CL-10A-SSB CL-20A-SSB CL-30A-SSB	CL-10C-SSB CL-20C-SSB CL-30C-SSB		.7500	2	4-3/4	2-3/4	1-9/16	CL-5/8-11x1.50-SHCS	CL-6-32x.50-SHCS	CL-10-32x.50-SHCS	CL-1/4-20x.75-SHCS
	CL-MF50-3902				1.0000					CL-5/8-11x2.00-SHCS			
	CL-MF50-3903				1.2500								
	CL-MF50-3904				1.5000					CL-5/8-11x2.25-SHCS			

Carr Lane®
MANUFACTURING CO.
4200 Carr Lane Ct., P.O. Box 191970
St. Louis, Missouri 63119-7970 USA
Phone: 314-647-6200, FAX: 314-647-5736
Web Site: www.carrlane.com

(Rev. 3-07)

SLOTTED-HEEL CLAMP STRAPS

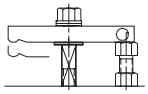

Short Clamp-Strap Assembly (see below)

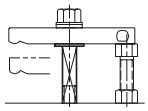

Tall Clamp-Strap Assembly (see below)

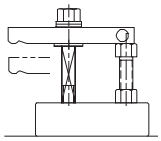

Tall Clamp-Strap Assembly on Riser Block (p. 35) or Riser Cylinders (p. 38)

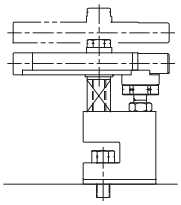

High-Rise Clamp (p. 52)

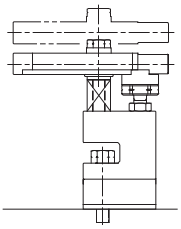

High-Rise Clamp on Spacer Block (p. 54)

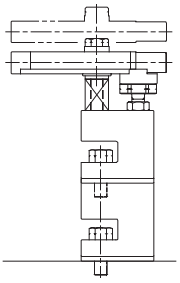

High-Rise Clamp on Narrow Riser Block (p. 54)

Our most-popular clamp strap, with a slot underneath to allow sliding it straight back for clear loading. Choose from three different fastening devices, each available in a short or tall version, and two clamp-strap lengths. Order components individually (page numbers listed are in the tooling-component catalog section).

Spherical Nut & Washer

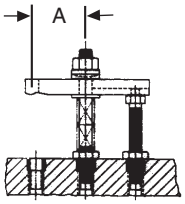

Mini
Standard
Heavy

SPHERICAL NUT & WASHER (SHORT)

SIZE	CLAMPING HEIGHT RANGE	CLAMP STRAP (p. 229) PART NO.	LENGTH	A	CLAMP REST (p. 204)	CLAMP SPRINGS (p. 205)	FLAT WASHER (p. 191)	JAM NUT (p. 188)	STUD (p. 194)	SPHER. NUT & WASHER (p. 190)
MINI	0 to 1-1/16	CL-1A-CS	2-1/2	27/32	CL-1A-CR	CL-6-SPG	CL-14-FW	CL-5-JN	CL-5/16-18x3.00	CL-9-SNW
		CL-1B-CS	3	1-11/32						
STANDARD	0 to 1-3/8	CL-8-CS	5	2-1/4	CL-4-CR	CL-9-SPG	CL-2-FW	CL-8-JN	CL-1/2-13x4.00	CL-3-SNW
		CL-10-CS	6	2-3/4						
HEAVY	0 to 1-3/8	CL-16-CS	5	2-3/16	CL-6-CR	CL-11-SPG	CL-3-FW	CL-10-JN	CL-5/8-11x4.50	CL-4-SNW
		CL-18-CS	6	2-11/16						

SPHERICAL NUT & WASHER (TALL)

MINI	1 to 1-3/4	CL-1A-CS	2-1/2	27/32	CL-1B-CR	(2) CL-6-SPG	CL-14-FW	CL-5-JN	CL-5/16-18x3.50	CL-9-SNW
		CL-1B-CS	3	1-11/32						
STANDARD	1-3/8 to 2-3/4	CL-8-CS	5	2-1/4	CL-5-CR	(2) CL-9-SPG	CL-2-FW	CL-8-JN	CL-1/2-13x5.50	CL-3-SNW
		CL-10-CS	6	2-3/4						
HEAVY	1-3/8 to 2-1/2	CL-16-CS	5	2-3/16	CL-7-CR	(2)CL-11-SPG	CL-3-FW	CL-10-JN	CL-5/8-11x5.50	CL-4-SNW
		CL-18-CS	6	2-11/16						

Hand Knob

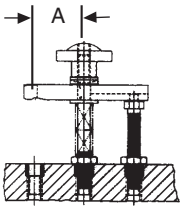

Mini
Standard
Heavy

HAND KNOB (SHORT)

SIZE	CLAMPING-HEIGHT RANGE	CLAMP STRAP (p. 229) PART NO.	LENGTH	A	CLAMP REST (p. 204)	CLAMP SPRINGS (p. 205)	FLAT WASHER (p. 191)	JAM NUT (p. 188)	STUD (p. 194)	HAND KNOB (p. 54)	SPHERICAL WASHER (p. 190)
MINI	0 to 1-1/16	CL-1A-CS	2-1/2	27/32	CL-1A-CR	CL-6-SPG	CL-14-FW	CL-5-JN	CL-5/16-18x3.00	CL-2-HK-2	CL-11-SW
		CL-1B-CS	3	1-11/32							
STANDARD	0 to 1-3/8	CL-8-CS	5	2-1/4	CL-4-CR	CL-9-SPG	CL-2-FW	CL-8-JN	CL-1/2-13x4.00	CL-4-HK-4	CL-3-SW
		CL-10-CS	6	2-3/4							
HEAVY	0 to 1-3/8	CL-16-CS	5	2-3/16	CL-6-CR	CL-11-SPG	CL-3-FW	CL-10-JN	CL-5/8-11x4.50	CL-10-HK-10	CL-4-SW
		CL-18-CS	6	2-11/16							

HAND KNOB (TALL)

MINI	1 to 1-3/4	CL-1A-CS	2-1/2	27/32	CL-1B-CR	(2) CL-6-SPG	CL-14-FW	CL-5-JN	CL-5/16-18x3.50	CL-2-HK-2	CL-11-SW
		CL-1B-CS	3	1-11/32							
STANDARD	1-3/8 to 2-3/4	CL-8-CS	5	2-1/4	CL-5-CR	(2) CL-9-SPG	CL-2-FW	CL-8-JN	CL-1/2-13x5.50	CL-4-HK-4	CL-3-SW
		CL-10-CS	6	2-3/4							
HEAVY	1-3/8 to 2-1/2	CL-16-CS	5	2-3/16	CL-7-CR	(2)CL-11-SPG	CL-3-FW	CL-10-JN	CL-5/8-11x5.50	CL-10-HK-10	CL-4-SW
		CL-18-CS	6	2-11/16							

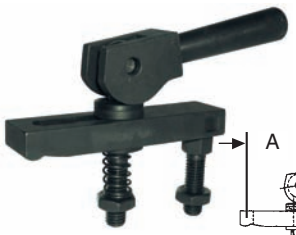

Cam Handle

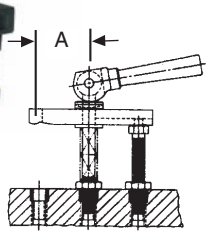

Mini
Standard
Heavy

CAM HANDLE (SHORT)

SIZE	CLAMPING-HEIGHT RANGE	CLAMP STRAP (p. 229) PART NO.	LENGTH	A	CLAMP REST (p. 204)	CLAMP SPRINGS (p. 205)	FLAT WASHER (p. 191)	JAM NUT (p. 188)	SPHERICAL WASHER (p. 190)	CAM HANDLE (p. 201)	EYE BOLT (p. 202)	CLEVIS PIN (p. 201)
MINI	0 to 1-1/16	CL-1A-CS	2-1/2	27/32	CL-1A-CR	CL-6-SPG	CL-14-FW	CL-5-JN	CL-11-SW	CL-11A-CH	CL-31-EB	CL-810-CLVP
		CL-1B-CS	3	1-11/32								
STANDARD	0 to 1-3/8	CL-8-CS	5	2-1/4	CL-4-CR	CL-9-SPG	CL-2-FW	CL-8-JN	CL-3-SW	CL-13-CH	CL-50-EB	CL-1218-CLVP
		CL-10-CS	6	2-3/4								
HEAVY	0 to 1-3/8	CL-16-CS	5	2-3/16	CL-6-CR	CL-11-SPG	CL-3-FW	CL-10-JN	CL-4-SW	CL-14-CH	CL-62-EB	CL-2020-CLVP
		CL-18-CS	6	2-11/16								

CAM HANDLE (TALL)

MINI	1 to 1-3/4	CL-1A-CS	2-1/2	27/32	CL-1B-CR	(2) CL-6-SPG	CL-14-FW	CL-5-JN	CL-11-SW	CL-11A-CH	CL-32-EB	CL-810-CLVP
		CL-1B-CS	3	1-11/32								
STANDARD	1-3/8 to 2-3/4	CL-8-CS	5	2-1/4	CL-5-CR	(2) CL-9-SPG	CL-2-FW	CL-8-JN	CL-3-SW	CL-13-CH	CL-51-EB	CL-1218-CLVP
		CL-10-CS	6	2-3/4								
HEAVY	1-3/8 to 2-1/2	CL-16-CS	5	2-3/16	CL-7-CR	(2)CL-11-SPG	CL-3-FW	CL-10-JN	CL-4-SW	CL-14-CH	CL-63-EB	CL-2020-CLVP
		CL-18-CS	6	2-11/16								

Carr Lane®
MANUFACTURING CO.
4200 Carr Lane Ct., P.O. Box 191970
St. Louis, Missouri 63119-7970 USA
Phone: 314-647-6200, FAX: 314-647-5736
Web Site: www.carrlane.com

(Rev. 11-09)

DOUBLE-END CLAMP STRAPS

A clamp-strap assembly with two clamping ends, for holding two workpieces simultaneously. Choose from three different fastening devices, each available in a short or tall version, and two clamp-strap lengths. Order components individually (page numbers listed are in the tooling-component catalog section).

Spherical Nut & Washer

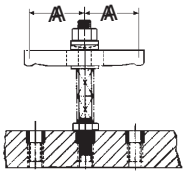

Mini
Standard
Heavy

SPHERICAL NUT & WASHER (SHORT)

SIZE	CLAMPING-HEIGHT RANGE	CLAMP STRAP (p. 228) PART NO.	LENGTH	A	CLAMP SPRINGS (p. 187)	FLAT WASHER (p. 185)	JAM NUT (p. 181)	STUD (p. 193)	SPHERICAL NUT & WASHER (p. 183)
MINI	0 to 1-1/16	CL-23C-CS	2	27/32	CL-6-SPG	CL-14-FW	CL-5-JN	CL-5/16-18x3.00	CL-9-SNW
		CL-23D-CS	3	1-11/32					
STANDARD	0 to 1-3/8	CL-28-CS	5	2-19/64	CL-9-SPG	CL-2-FW	CL-8-JN	CL-1/2-13x4.00	CL-3-SNW
		CL-30-CS	6	2-51/64					
HEAVY	0 to 1-3/8	CL-32A-CS	5	2-1/4	CL-11-SPG	CL-3-FW	CL-10-JN	CL-5/8-11x4.50	CL-4-SNW
		CL-33-CS	6	2-3/4					

SPHERICAL NUT & WASHER (TALL)

MINI	1 to 1-3/4	CL-23C-CS	2	27/32	(2) CL-6-SPG	CL-14-FW	CL-5-JN	CL-5/16-18x3.50	CL-9-SNW
		CL-23D-CS	3	1-11/32					
STANDARD	1-3/8 to 2-3/4	CL-28-CS	5	2-19/64	(2) CL-9-SPG	CL-2-FW	CL-8-JN	CL-1/2-13x5.50	CL-3-SNW
		CL-30-CS	6	2-51/64					
HEAVY	1-3/8 to 2-1/2	CL-32A-CS	5	2-1/4	(2)CL-11-SPG	CL-3-FW	CL-10-JN	CL-5/8-11x5.50	CL-4-SNW
		CL-33-CS	6	2-3/4					

Hand Knob

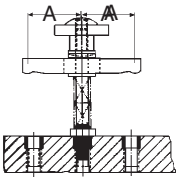

Mini
Standard
Heavy

HAND KNOB (SHORT)

SIZE	CLAMPING-HEIGHT RANGE	CLAMP STRAP (p. 228) PART NO.	LENGTH	A	CLAMP SPRINGS (p. 187)	FLAT WASHER (p. 185)	JAM NUT (p. 181)	STUD (p. 193)	HAND KNOB (p. 54)	SPHERICAL WASHER (p. 183)
MINI	0 to 1-1/16	CL-23C-CS	2	27/32	CL-6-SPG	CL-14-FW	CL-5-JN	CL-5/16-18x3.00	CL-2-HK-2	CL-11-SW
		CL-23D-CS	3	1-11/32						
STANDARD	0 to 1-3/8	CL-28-CS	5	2-19/64	CL-9-SPG	CL-2-FW	CL-8-JN	CL-1/2-13x4.00	CL-4-HK-4	CL-3-SW
		CL-30-CS	6	2-51/64						
HEAVY	0 to 1-3/8	CL-32A-CS	5	2-1/4	CL-11-SPG	CL-3-FW	CL-10-JN	CL-5/8-11x4.50	CL-10-HK-10	CL-4-SW
		CL-33-CS	6	2-3/4						

HAND KNOB (TALL)

MINI	1 to 1-3/4	CL-23C-CS	2	27/32	(2) CL-6-SPG	CL-14-FW	CL-5-JN	CL-5/16-18x3.50	CL-2-HK-2	CL-11-SW
		CL-23D-CS	3	1-11/32						
STANDARD	1-3/8 to 2-3/4	CL-28-CS	5	2-19/64	(2) CL-9-SPG	CL-2-FW	CL-8-JN	CL-1/2-13x5.50	CL-4-HK-4	CL-3-SW
		CL-30-CS	6	2-51/64						
HEAVY	1-3/8 to 2-1/2	CL-32A-CS	5	2-1/4	(2)CL-11-SPG	CL-3-FW	CL-10-JN	CL-5/8-11x5.50	CL-10-HK-10	CL-4-SW
		CL-33-CS	6	2-3/4						

Cam Handle

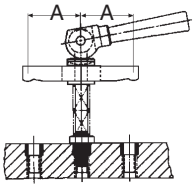

Mini
Standard
Heavy

CAM HANDLE (SHORT)

SIZE	CLAMPING-HEIGHT RANGE	CLAMP STRAP (p. 228) PART NO.	LENGTH	A	CLAMP SPRINGS (p. 187)	FLAT WASHERS (p. 185)	JAM NUT (p. 181)	SHERICAL WASHER (p. 183)	CAM HANDLE (p. 189)	EYE BOLT (p. 188)	DOWEL PIN (p. 189)
MINI	0 to 1-1/16	CL-23C-CS	2	27/32	CL-6-SPG	CL-14-FW	CL-5-JN	CL-11-SW	CL-11A-CH	CL-31-EB	CL-1/4x.62-CADP
		CL-23D-CS	3	1-11/32							
STANDARD	0 to 1-3/8	CL-28-CS	5	2-19/64	CL-9-SPG	CL-2-FW	CL-8-JN	CL-3-SW	CL-13-CH	CL-50-EB	CL-3/8x1.00-CADP
		CL-30-CS	6	2-51/64							
HEAVY	0 to 1-3/8	CL-32A-CS	5	2-1/4	CL-11-SPG	CL-3-FW	CL-10-JN	CL-4-SW	CL-14-CH	CL-62-EB	CL-5/8x1.25-CADP
		CL-33-CS	6	2-3/4							

CAM HANDLE (TALL)

MINI	1 to 1-3/4	CL-23C-CS	2	27/32	(2) CL-6-SPG	CL-14-FW	CL-5-JN	CL-11-SW	CL-11A-CH	CL-32-EB	CL-1/4x.62-CADP
		CL-23D-CS	3	1-11/32							
STANDARD	1-3/8 to 2-3/4	CL-28-CS	5	2-19/64	(2) CL-9-SPG	CL-2-FW	CL-8-JN	CL-3-SW	CL-13-CH	CL-51-EB	CL-3/8x1.00-CADP
		CL-30-CS	6	2-51/64							
HEAVY	1-3/8 to 2-1/2	CL-32A-CS	5	2-1/4	(2)CL-11-SPG	CL-3-FW	CL-10-JN	CL-4-SW	CL-14-CH	CL-63-EB	CL-5/8x1.25-CADP
		CL-33-CS	6	2-3/4							

Carr Lane®
MANUFACTURING CO.
4200 Carr Lane Ct., P.O. Box 191970
St. Louis, Missouri 63119-7970 USA
Phone: 314-647-6200, FAX: 314-647-5736
Web Site: www.carrlane.com

(Rev. 3-10)

HIGH-RISE CLAMPS

Slotted Heel

Mini
Standard
Heavy

For clamping taller workpieces. All-in-one clamp construction for quick, safe setups. Modular design allows stacking for height flexibility. Clamp straps slide back for loading clearance. Tapped-nose and gooseneck clamp straps can be reversed to use either end for clamping. The tapped-nose end accepts a contact bolt, while the cylindrical end is ideal for clamping in horizonal holes or narrow slots. The gooseneck strap provides a low clamp profile, and can also be reversed to use the plain end as a tapered-nose clamp.

High-Rise Clamps can be stacked on Narrow Riser Blocks and Spacer Blocks (page 54) to reach tall workpieces.

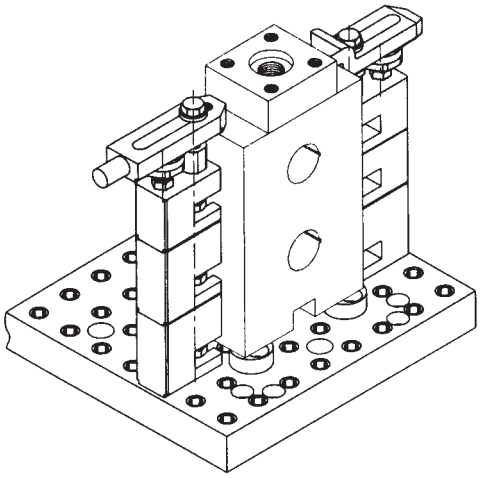

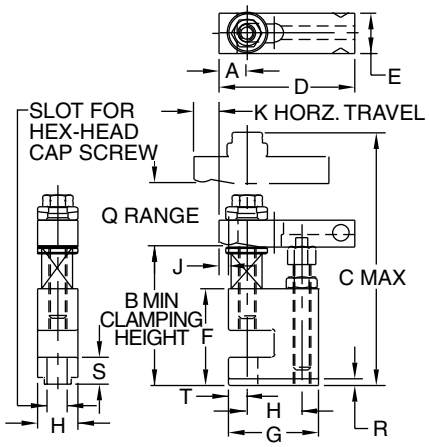

SLOTTED HEEL HIGH-RISE CLAMPS

SIZE	PART NO.	A	B	C	D	E	F	G	H	J	K	Q	R	S	T	HEX-HEAD CAP SCREW (1 REQD)
MINI	CL-MF25-2051	1/2	1-7/8	3-3/8	2-1/2	3/4	1-7/16	1-5/8	1	5/32	1/2	1/2	3/32	3/8	1/2	CL-MF25-4312*
	CL-MF25-2052				3						1					
STANDARD	CL-MF40-2051	23/32	3-5/8	5-3/4	4	1-1/4	2-3/4	2-3/4	1-9/16	13/64	1-9/32	1	3/16	13/16	9/16	CL-MF40-4311
HEAVY	CL-MF50-2051	29/32		7-1/4	5	1-1/2	2-15/16	3-9/16	2	1/4	1-19/32				13/16	CL-MF50-4311

* Use CL-MF25-4311 when mounted on a Narrow Riser Block.

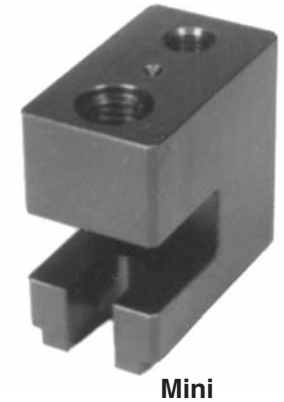

Adaptor Base

Mini
Standard
Heavy

Adaptor used in the assembly above. Also allows using other types of clamp straps as high-rise clamps.

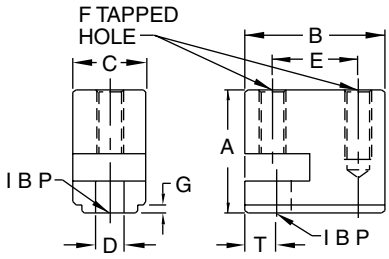

ADAPTOR BASES

SIZE	PART NO.	A	B	C	D	E	F	G	HEX-HEAD CAP SCREW (1 REQD)
MINI	CL-MF25-1902	1-7/16	1-5/8	1	11/32	1	5/16-18	3/32	CL-MF25-4312
STANDARD	CL-MF40-1901	2-3/4	2-3/4	1-9/16	9/16	1-9/16	1/2-13	3/16	CL-MF40-4311
HEAVY	CL-MF50-1901	2-15/16	3-9/16	2	11/16	2	5/8-11	3/16	CL-MF50-4311

Carr Lane®
MANUFACTURING CO.
4200 Carr Lane Ct., P.O. Box 191970
St. Louis, Missouri 63119-7970 USA
Phone: 314-647-6200, FAX: 314-647-5736
Web Site: www.carrlane.com

(Rev. 7-02)

HIGH-RISE CLAMPS

Tapped Nose

Mini
Standard
Heavy

Tapped-nose and gooseneck clamp straps can be reversed to use either end for clamping (except mini, which has no cylindrical end). The tapped-nose end accepts a contact bolt, while the cylindrical end is ideal for clamping in horizontal holes or narrow slots. The gooseneck strap provides a low clamp profile, and can also be reversed to use the plain end as a tapered-nose clamp.

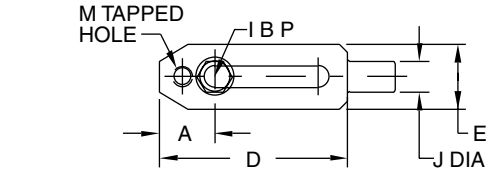

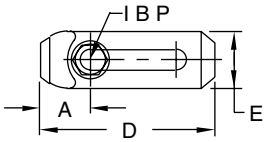

Gooseneck

Standard
Heavy

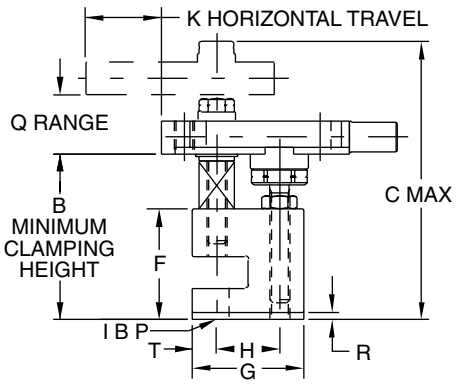

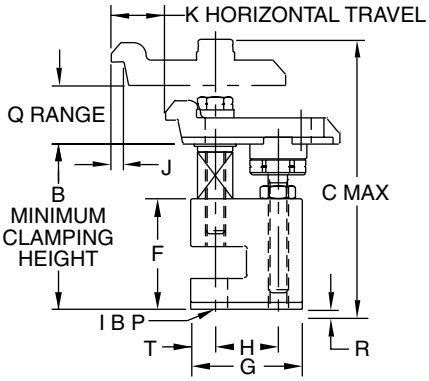

TAPPED-NOSE HIGH-RISE CLAMPS

SIZE	PART NO.	A	B	C	D	E	F	G	H	J	K	M	Q	R	S	T	HEX-HEAD CAP SCREW (1 REQD)
MINI	CL-MF25-2001	1	1-7/8	3-3/8	3-1/2	3/4	1-7/16	1-5/8	1	—	1	5/16-18	1/2	3/32	3/8	1/2	CL-MF25-4312
STANDARD	CL-MF40-2001	1-3/8	4-1/8	6-5/8	5-7/8	1-5/8	2-3/4	2-3/4	1-9/16	3/4	1-9/16	1/2-13	1-1/4	3/16	13/16	9/16	CL-MF40-4311
HEAVY	CL-MF50-2001	1-13/16	4-3/8	7-3/8	7-1/2	2	2-15/16	3-9/16	2	1	2	5/8-11	1-3/8	3/16	13/16	13/16	CL-MF50-4311

GOOSENECK HIGH-RISE CLAMPS

STANDARD	CL-MF40-2101	1-3/4	4-3/4	6-5/8	4-5/8	1-3/8	2-3/4	2-3/4	1-9/16	9/16	1-3/8	—	1-1/4	3/16	13/16	9/16	CL-MF40-4311
HEAVY	CL-MF50-2101	2-3/8	5-3/8	7-5/8	6-1/2	2	2-15/16	3-9/16	2	11/16	2	—	1-3/8	3/16	13/16	13/16	CL-MF50-4311

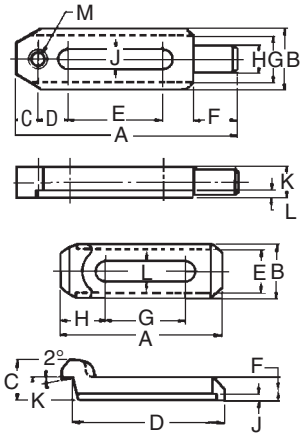

TAPPED-NOSE CLAMP STRAPS

SIZE	PART NO.	STUD SIZE	A	B	C	D	E	F	G	H DIA	J	K	L	M
MINI	CL-MF25-2201	5/16-18	3-1/2	3/4	3/8	5/8	1	—	—	—	11/32	1/2	—	5/16-18
STANDARD	CL-MF40-2201	1/2-13	5-7/8	1-5/8	9/16	13/16	2-9/16	1-3/16	1-3/16	3/4	17/32	13/16	5/32	1/2-13
HEAVY	CL-MF50-2201	5/8-11	7-1/2	2	13/16	1	3-1/8	1-7/16	1-9/16	1	11/16	1-1/8	3/16	5/8-11

GOOSENECK CLAMP STRAPS

SIZE	PART NO.	STUD SIZE	A	B	C	D	E	F	G	H	J	K	L
STANDARD	CL-MF40-2202	1/2-13	4-5/16	1-7/16	1-1/16	4	1-3/16	5/8	2-1/8	1-9/16	5/32	19/32	17/32
HEAVY	CL-MF50-2202	5/8-11	6-5/16	2	2	5-11/16	1-9/16	1	2-3/4	2-3/16	3/16	1	11/16

Carr Lane®
MANUFACTURING CO.
4200 Carr Lane Ct., P.O. Box 191970
St. Louis, Missouri 63119-7970 USA
Phone: 314-647-6200, FAX: 314-647-5736
Web Site: www.carrlane.com

(Rev. 3-07)

HIGH-RISE-CLAMP ACCESSORIES

CARBON STEEL, BLACK OXIDE FINISH

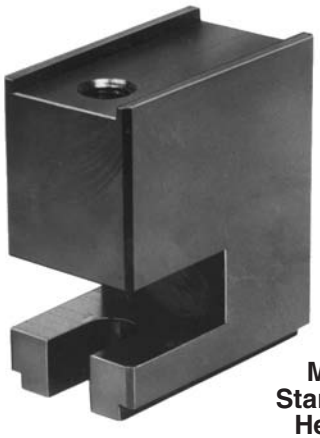

Narrow Riser Block

Mini
Standard
Heavy

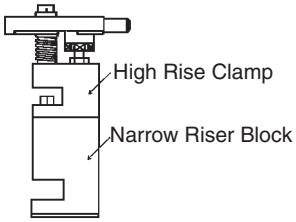

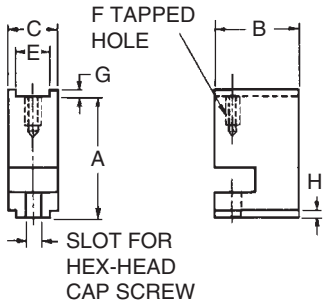

These Narrow Riser Blocks are used to raise up High-Rise Clamps to reach tall workpieces. Interlocking channels ensure that clamps and risers remain properly aligned when stacked up. Clamps and risers are fastened to the tapped hole on top of the riser block.

NARROW RISER BLOCKS

SIZE	PART NO.	A	B	C	E	F	G	H	HEX-HEAD CAP SCREW (1 REQD)
MINI	CL-MF25-2301	1	1-5/8	1	13/16	5/16-18	1/16	3/32	CL-MF25-4312
STANDARD	CL-MF40-2301	3	2-3/4	1-9/16	1-3/16	1/2-13	1/8	3/16	CL-MF40-4311
HEAVY	CL-MF50-2301	3	3-9/16	2	1-9/16	5/8-11	1/8	3/16	CL-MF50-4311

Spacer Block

Mini
Standard
Heavy

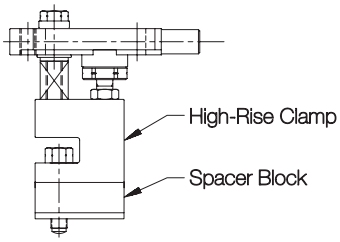

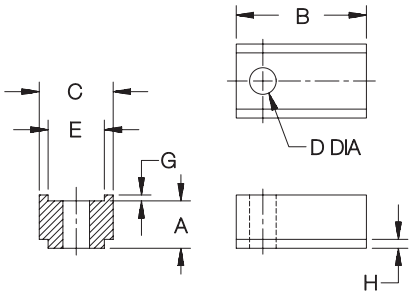

A shorter version of the Narrow Riser Block for raising height only slightly. These blocks also have interlocking channels and can be stacked. Note: A longer hex-head cap screw is required to mount the High-Rise Clamp when using a Spacer Block.

SPACER BLOCKS

SIZE	PART NO.	A	B	C	D DIA	E	G	H
MINI	CL-MF25-2351	1/2	1-5/8	1	11/32	13/16	1/16	3/32
STANDARD	CL-MF40-2351	1	2-3/4	1-9/16	17/32	1-3/16	1/8	3/16
HEAVY	CL-MF50-2351	1	3-9/16	2	11/16	1-9/16	1/8	3/16

Support Holder

Standard
Heavy

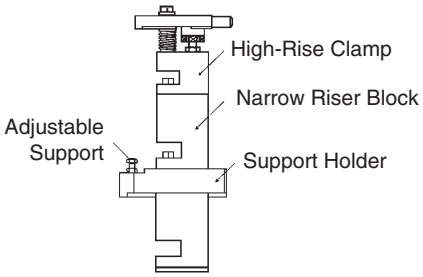

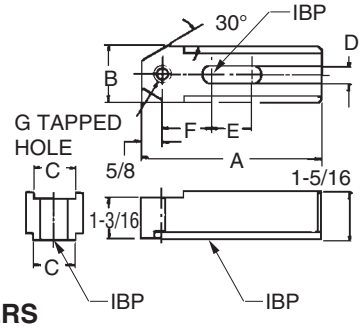

Support Holders allow using an adjustable support as part of a High-Rise-Clamp assembly. Slotted to allow positioning support anywhere within a range. For precision height location, an Extension Support (page 36) can be used instead (always used on mini size). Note: The longest standard hex-head cap screw is required to mount High-Rise Clamps when using a Support Holder.

SUPPORT HOLDERS

SIZE	PART NO.	A	B	C	D	E	F	G
STANDARD	CL-MF40-2401	5-1/8	1-9/16	1-3/16	17/32	1-3/16	1-3/16	1/2-13
HEAVY	CL-MF50-2401	6-3/8	2	1-9/16	11/16	1-9/16	1-3/8	5/8-11

Carr Lane®
MANUFACTURING CO.
4200 Carr Lane Ct., P.O. Box 191970
St. Louis, Missouri 63119-7970 USA
Phone: 314-647-6200, FAX: 314-647-5736
Web Site: www.carrlane.com

(Rev. 3-07)

SWIVEL CONTACT BOLTS

BALL: CHROME STEEL, HEAT TREATED RC 60-67
BODY: 1144 STEEL, HEAT TREATED RC 35-40, BLACK OXIDE FINISH

Mini
Standard
Heavy

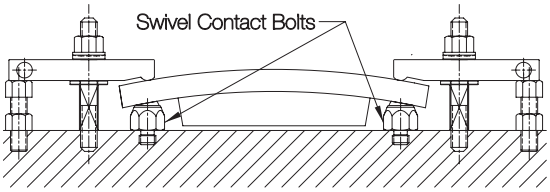

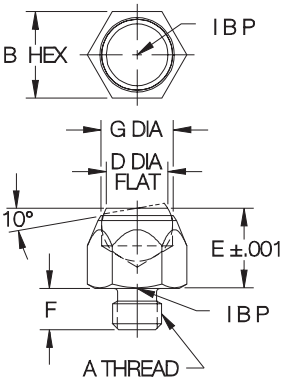

Swivel Contact Bolts are precision ground for accurate height location, even on sloped surfaces. See page 38 for Height Shims if additional heights are required.

Precision swivel ball that can be used as either a contact bolt or rest pad. Ideal for evenly distributing clamping pressure on sloped surfaces. For additional thread sizes, see tooling-component catalog section (page 157).

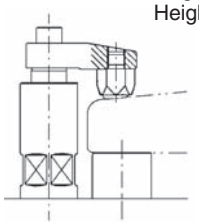

SIZE	PART NO.	A	B	D DIA	E	F	G DIA
MINI	CL-MF25-2502	5/16-18	9/16	13/32	.5000	.32	15/32
STANDARD	CL-MF40-2501	1/2-13	7/8	5/8	.8125	.41	23/32
HEAVY	CL-MF50-2501	5/8-11	1-1/16	13/16	1.0000	.61	29/32

CONTACT-BOLT EXTENSIONS

1045 OR 12L14 STEEL, BLACK OXIDE FINISH

Mini
Standard
Heavy

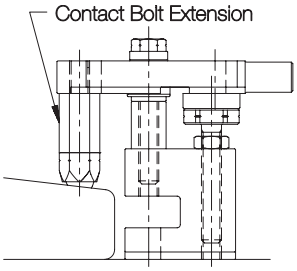

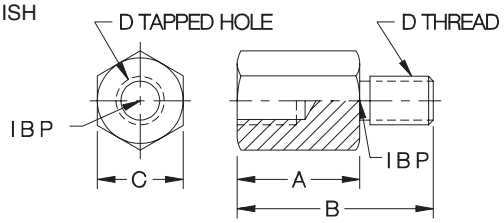

Use with Swivel Contact Bolts to extend their length. Extensions can be stacked to increase length even further.

CONTACT-BOLT EXTENSIONS

SIZE	PART NO.	A	B	C	D
MINI	CL-MF25-2601	1/2	13/16	9/16	5/16-18
	CL-MF25-2602	3/4	1-1/16		
	CL-MF25-2603	1	1-5/16		
STANDARD	CL-MF40-2601	1-1/4	2	7/8	1/2-13
	CL-MF40-2602	2	2-3/4		
	CL-MF40-2603	3	3-3/4		
HEAVY	CL-MF50-2601	1-1/4	2-1/4	1-1/16	5/8-11
	CL-MF50-2602	2	3		
	CL-MF50-2603	3	4		

STANDARD-ADJUSTABLE SPINDLES

CARBON STEEL, ZINC PLATED CLEAR CHROMATE

Mini
Standard
Heavy

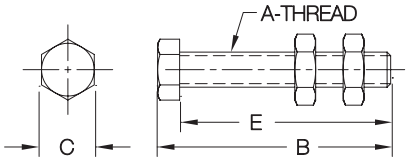

STANDARD-ADJUSTABLE SPINDLES

SIZE	PART NO.	A	B	C	E
MINI	CL-516212-SA	5/16-18	2-11/16	1/2	2-1/2
———	CL-38314-SA	3/8-16	3-1/4	9/16	3
STANDARD	CL-12314-SA	1/2-13	3-5/16	3/4	3
HEAVY	CL-58438-SA	5/8-11	4-3/8	15/16	4

Long hex-head contact bolt. Fully threaded for maximum adjustment range.

Carr Lane®
MANUFACTURING CO.
4200 Carr Lane Ct., P.O. Box 191970
St. Louis, Missouri 63119-7970 USA
Phone: 314-647-6200, FAX: 314-647-5736
Web Site: www.carrlane.com

(Rev. 10-07)

UP-THRUST CLAMPS

STEEL, WEAR SURFACES HARDENED, BLACK OXIDE FINISH

Standard

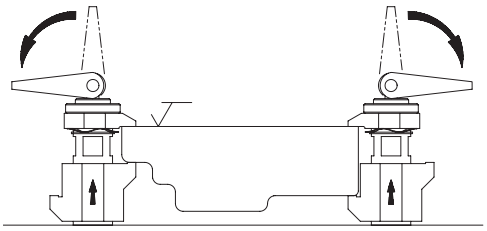

Up-Thrust Clamps locate off of the part's top surface and clamp up from below.

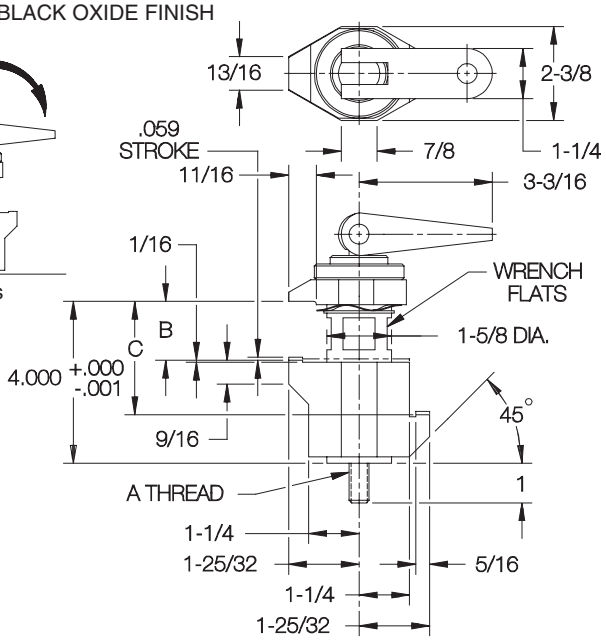

Combination clamp and locator with unique upward clamping action. Pushing down the cam handle pulls the lower jaw upward. This clamps the workpiece against the stationary upper jaw, whose bottom surface is a precision-ground locator.

The lower jaw has two clamping surfaces 180° apart, one for thinner parts, the other for thicker parts. The cam handle rotates to screw the lower jaw up or down for fine adjustment.

SIZE	PART NO.	A	B RANGE		C RANGE		MAX CLAMPING FORCE (LBS)
			MIN	MAX	MIN	MAX	
STANDARD	CL-MF40-5301	1/2-13	0	1-3/8	1-3/8	2-3/4	2200

SWING CLAMP ASSEMBLIES

ARM: DUCTILE IRON ASTM CLASS 60-45-10, ZINC PLATED
KNOB: CAST ALUMINUM, BALLS: BLACK PHENOLIC PLASTIC
OTHER COMPONENTS: MILD STEEL, BLACK OXIDE FINISH

Ball Handle

Knob Handle

Standard
Heavy

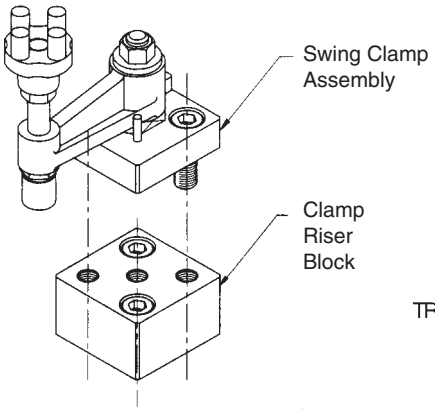

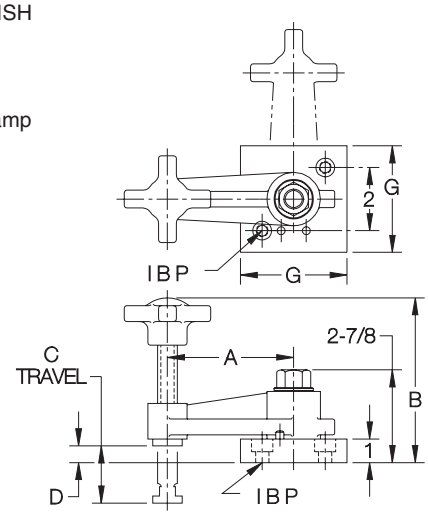

Long-reach swing clamp that can be hand tightened for medium clamping force. The stop pin furnished can be installed on either side for clockwise or counterclockwise rotation. For additional height, use Clamp Riser Blocks (page 34). For additional, non-modular sizes and more-complete dimensions, see page 212-213 of tooling-component catalog section.

BALL HANDLE

SIZE	PART NO.	A	B	C	D	E	G	SOCKET-HEAD CAP SCREWS (2 REQD)
STANDARD	CL-MF40-1511	2-1/2	3-3/4	13/16	1/2	1/2-13	3	CL-1/2-13x1.50-SHCS
HEAVY	CL-MF50-1511	4	4-3/4	1-13/16	1/2	5/8-11	3-3/8	CL-5/8-11x2.00-SHCS

KNOB HANDLE

STANDARD	CL-MF40-1521	2-1/2	3-1/2	13/16	1/2	1/2-13	3	CL-1/2-13x1.50-SHCS
HEAVY	CL-MF50-1521	4	4-1/2	1-13/16	1/2	5/8-11	3-3/8	CL-5/8-11x2.00-SHCS

Carr Lane®
MANUFACTURING CO.
4200 Carr Lane Ct., P.O. Box 191970
St. Louis, Missouri 63119-7970 USA
Phone: 314-647-6200, FAX: 314-647-5736
Web Site: www.carrlane.com

HOOK CLAMPS

CLAMP BODY: 4135 STEEL, HEAT TREATED, BLACK OXIDE FINISH
HOLDER: 1045 STEEL, BLACK OXIDE FINISH

Long Arm

Tapped Long Arm

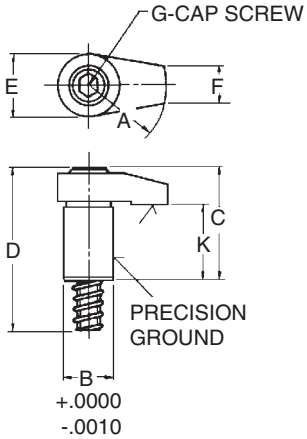

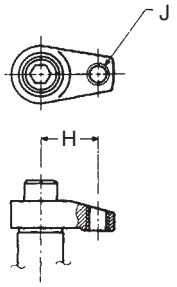

Versatile Hook Clamps available with either a plain or tapped arm. The tapped-arm version accepts a wide variety of contact bolts ar adjustment spindles to increase clamping range (the tapped arm is also slightly longer). For additional sizes and more-complete dimensions, see pages 203-204 of tooling component catalog section.

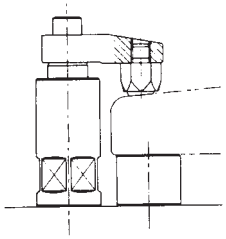

Hook Clamps work well in conjunctioo with Support Cylinders (page 40) or Screw Rest Pads (page 46) to allow clamping directly over a supported point. Also see tooling-component section p. 211 for Hook-Clamp Mounting Blocks.

LONG-ARM HOOK CLAMPS

SIZE	PART NO.	A	B DIA	C	D	E	F	G	H	J	K
MINI	CL-MF25-5002	1	.7500	1-7/16	2-5/16	7/8	3/8	5/16-18x2.00	—	—	29/32
STANDARD	CL-MF40-5002	2	1.0000	2-1/2	3-1/2	1-1/4	11/16	1/2-13x3.00	—	—	1-17/32
HEAVY	CL-MF50-5002	2	1.2500	2-7/8	3-7/8	1-7/16	7/8	5/8-11x3.25	—	—	1-17/32

TAPPED LONG-ARM HOOK CLAMPS

MINI	CL-MF25-5013	1-3/16	.7500	1-7/16	2-5/16	7/8	3/8	5/16-18x2.00	15/16	5/16-18	29/32
STANDARD	CL-MF40-5013	2-3/8	1.0000	2-1/2	3-1/2	1-1/4	11/16	1/2-13x3.00	1-13/16	1/2-13	1-17/32
HEAVY	CL-MF50-5014	2-3/8	1.2500	2-7/8	3-7/8	1-7/16	7/8	5/8-11x3.25	1-13/16	5/8-11	1-17/32

Hook-Clamp Holder

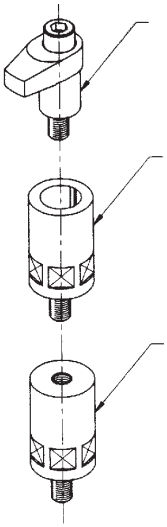

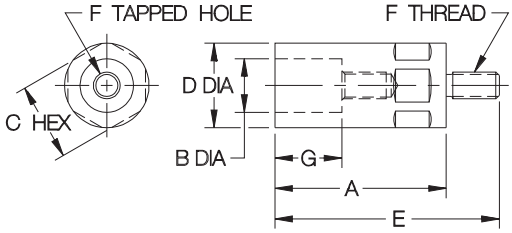

HOOK-CLAMP HOLDERS

SIZE	PART NO.	F THREAD SIZE	A	B DIA	C	D DIA	E	G
MINI	CL-MF25-5101	5/16-18	2-1/4	.7500	7/8	1	3	15/16
STANDARD	CL-MF40-5101	1/2-13	3-1/8	1.0000	1-7/16	1-9/16	4-3/8	1-9/16
	CL-MF40-5102		4				5-1/4	
HEAVY	CL-MF50-5101	5/8-11	3-1/8	1.2500	1-3/4	2	4-3/8	1-9/16
	CL-MF50-5102		4				5-1/4	

Carr Lane®
MANUFACTURING CO.
4200 Carr Lane Ct., P.O. Box 191970
St. Louis, Missouri 63119-7970 USA
Phone: 314-647-6200, FAX: 314-647-5736
Web Site: www.carrlane.com

(Rev. 7-10)

FORGED ADJUSTABLE CLAMPS

FORGED C1045 STEEL, BLACK OXIDE FINISH

Standard Heavy

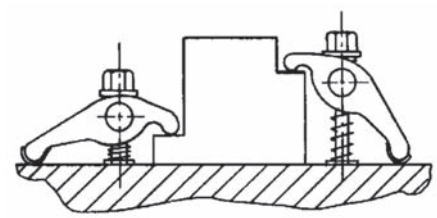

Rugged forged steel pivot clamp with an integral heel support. Order components individually (page numbers listed are in the tooling-component catalog section). For additional sizes, see page 179 of the tooling-component catalog section.

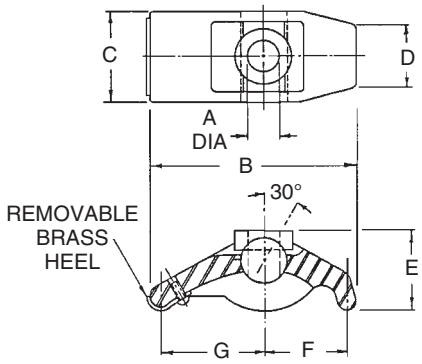

SIZE	PART NO. CLAMP (p. 224)	STUD (p. 216)	FLANGE NUT (p. 240)	CLAMP SPRING (p. 245)	JAM NUT (p. 239)	CLAMPING-HEIGHT RANGE	A DIA	B	C	D	E	F	G
MINI	CL-6-FAC	CL-5/16-18x3.50-STUD	CL-3-FN	CL-6-SPG	CL-5-JN	0 to 1-3/4	7/16	3-1/4	1-1/4	7/8	1	1-1/8	1-7/8
STANDARD	CL-8-FAC	CL-1/2-13x4.50-STUD	CL-3-FN	CL-9-SPG	CL-8-JN	0 to 2-1/16	9/16	4	1-5/8	1-1/8	1-7/16	1-7/16	2-5/16
HEAVY	CL-10-FAC	CL-5/8-11x6.00-STUD	CL-4-FN	CL-11-SPG	CL-10-JN	0 to 3	11/16	5-1/2	1-7/8	1-3/8	1-7/8	2	3-1/4

CAM EDGE CLAMPS

BODY: STEEL, WEAR SURFACES HARDENED, BLACK OXIDE FINISH
BALL HANDLE: BLACK PHENOLIC PLASTIC

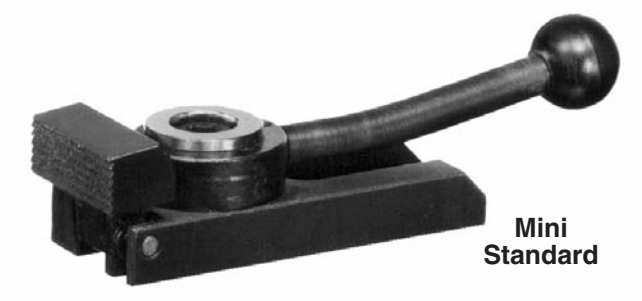

Mini Standard

Pivoting-nose edge clamp operated by a cam handle for fast action. Smooth spiral cam locks positively anywhere within its 180° throw. Choice of clockwise or counterclockwise handle rotation to clamp. For additional models, see page 207 of the tooling-component catalog section.

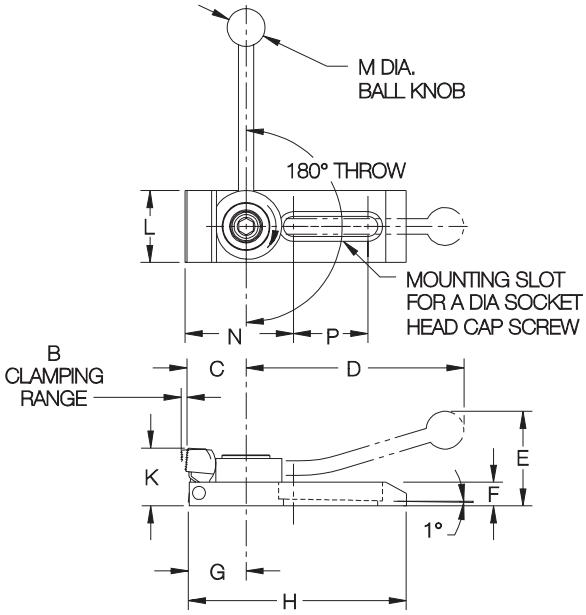

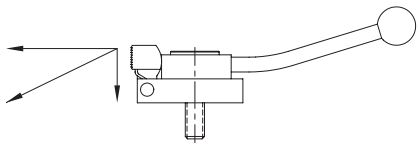

Nose pivots to exert clamping force forward and downward at the same time.

SIZE	PART NO.	CLAMPING DIRECTION	A	B	C	D	E	F	G	H	K MIN	K MAX	L	M	N	P	MAX CLAMPING FORCE (LBS) HORIZ.	MAX CLAMPING FORCE (LBS) VERT.	SOCKET-HEAD CAP SCREW (1 REQ'D)
MINI	CL-MF25-5611	CLOCKWISE	5/16-18	5/32	1-1/8	3-15/16	1-5/8	7/16	15/16	3-1/2	7/8	1	1-1/4	3/4	2	1	750	50	CL-5/16-18x1.00-SHCS
	CL-MF25-5612	CCW																	
STANDARD	CL-MF40-5611	CLOCKWISE	1/2-13	7/32	1-9/16	5-3/4	2-1/2	5/8	1-1/2	6	1-5/16	1-1/2	1-7/8	1	2-15/16	2	1500	100	CL-1/2-13x1.25-SHCS
	CL-MF40-5612	CCW																	

Carr Lane®
MANUFACTURING CO.
4200 Carr Lane Ct., P.O. Box 191970
St. Louis, Missouri 63119-7970 USA
Phone: 314-647-6200, FAX: 314-647-5736
Web Site: www.carrlane.com

(Rev. 10-07)

PIVOTING EDGE CLAMPS

BODY: GRAY CAST IRON, ASTM CLASS 40, BLACK OXIDE FINISH
JAW: 1045 STEEL, HEAT TREATED RC 40-45, BLACK OXIDE FINISH
BOLT: 4135 STEEL, HEAT TREATED, BLACK OXIDE FINISH

Standard

Large edge clamp that is ideal for tall workpieces. Pivoting nose pushes forward and downward simultaneously. Can be used to clamp against fixed locators, or against the Downthrust Backstops shown below. Replacement jaws are available.

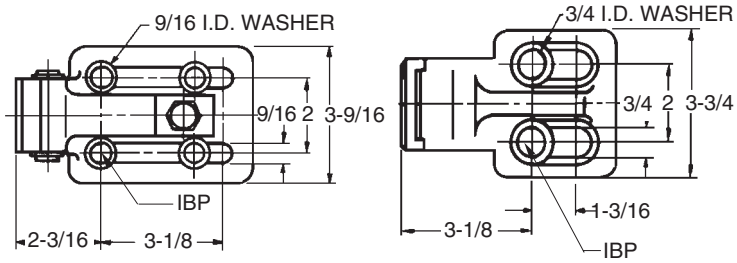

Heavy

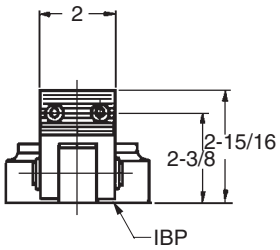

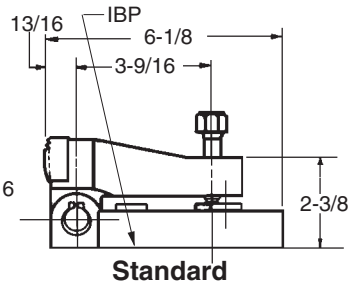

Standard

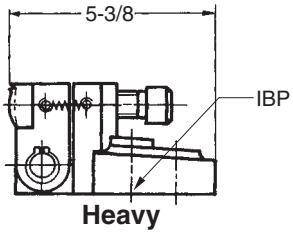

Heavy

Pivoting Edge Clamps

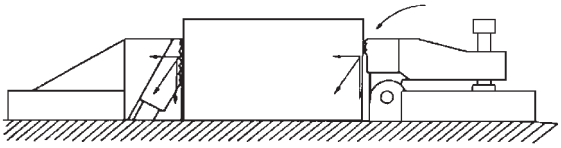

PIVOTING EDGE CLAMPS

SIZE	PART NO.	MAX. CLAMPING FORCE (LBS) HORIZONTAL	MAX. CLAMPING FORCE (LBS) VERTICAL	SOCKET-HEAD CAP SCREWS (2 OR 4 REQD)	REPLACEMENT JAW
STANDARD	CL-MF40-1001	2000	220	(4) CL-1/2-13x2.25-SHCS	CL-MF40-1011
HEAVY	CL-MF50-1001	4200	730	(2) CL-5/8-11x3.00-SHCS	CL-MF40-1011

Standard

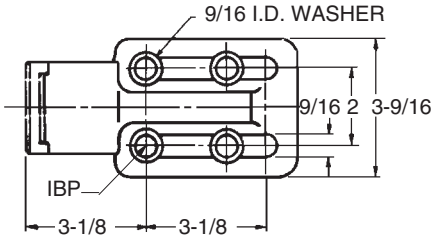

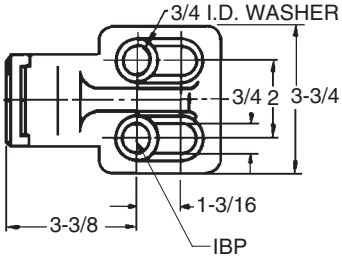

Heavy

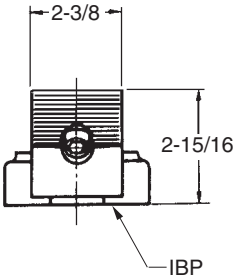

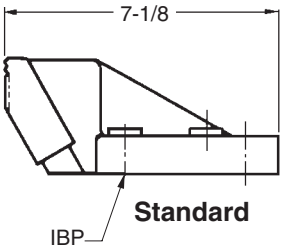

Standard

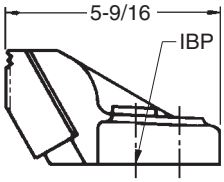

Heavy

Downthrust Backstops

These backstops slide back and downward to provide downholding force on both sides of the workpiece when used with a matching edge clamp. Use when precise horizontal location is not necessary. Replacement jaws are available.

DOWNTHRUST BACKSTOPS

SIZE	PART NO.	SOCKET-HEAD CAP SCREWS (2 OR 4 REQD)	REPLACEMENT JAW
STANDARD	CL-MF40-1101	(4) CL-1/2-13x2.25-SHCS	CL-MF40-1111
HEAVY	CL-MF50-1101	(2) CL-5/8-11x3.00-SHCS	CL-MF40-1111

Carr Lane®
MANUFACTURING CO.
4200 Carr Lane Ct., P.O. Box 191970
St. Louis, Missouri 63119-7970 USA
Phone: 314-647-6200, FAX: 314-647-5736
Web Site: www.carrlane.com

(Rev. 7-02)

SERRATED EDGE CLAMPS

BODY AND NOSE: 1018 STEEL, CARBURIZED-HARDENED, BLACK OXIDE FINISH
CLAMPING SCREW: 4140 STEEL, HEAT TREATED RC 43-45, BLACK OXIDE FINISH
NOSE COVER: ALUMINUM

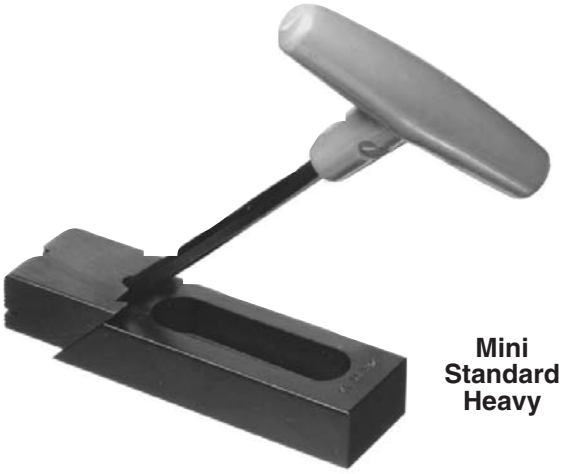

Mini
Standard
Heavy

This low-profile clamp is ideal for gripping the side of a workpiece to keep the top clear for machining. Clamps both forward and down simultaneously, by tightening the socket-head screw in the sliding nose with a hex wrench. V-groove in nose is excellent for clamping round parts or corners.

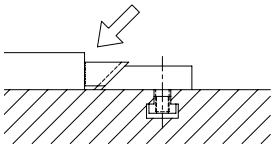

High Nose

High-nose version is best for most applications. Gripping high up on the workpiece, close to the machining plane, provides maximum clamping rigidity. A removable aluminum nose cover is furnished for clamping soft or machined parts without damage.

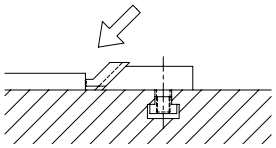

Low Nose

Low-nose version is ideal for thin parts, with its extra machining clearance.

ADJUSTABLE — HIGH NOSE

SIZE	PART NO.	A	B	C	D	E	F	G	H	J	K	L	M	N	P	Q	MOUNTING SCREWS (1 OR 2 REQD)
MINI	CL-1-SAC	2	5/8	1	—	—	—	1/4	9/32	7/16	1/4	1-1/2	5/32	—	—	1-3/8	(1) CL-5/16-18x1.12-SHCS
	CL-5-SAC	3						1-1/4				2-1/2					
STANDARD	CL-45-SAC	4	7/8	1-1/2	—	—	—	1-1/4	1/2	5/8	5/16	3-3/16	1/4	—	—	2-1/4	(1) CL-1/2-13x1.50-SHCS
	CL-55-SAC	5-1/2						2-1/8				4-11/16				2-1/2	
	CL-65-SAC	7-1/8						3				6-5/16				2-9/16	
HEAVY	CL-75-SAC	5-1/2	1-1/4	1-3/4	—	—	—	1-3/8	5/8	3/4	5/16	4-1/2	5/16	—	—	3-9/32	(1) CL-5/8-11x2.00-SHCS
	CL-95-SAC	8-1/4						4				7-1/4				3	(2) CL-5/8-11x2.00-SHCS

ADJUSTABLE — LOW NOSE

MINI	CL-0-SAC	2	5/8	1	—	—	—	1/4	9/32	—	1/4	1-1/2	5/32	1/8	1/8	1-3/8	(1) CL-5/16-18x1.12-SHCS
	CL-00-SAC	3						1-1/4				2-1/2					
STANDARD	CL-40-SAC	4	7/8	1-1/2	—	—	—	1-1/4	1/2	—	5/16	3-3/16	1/4	1/4	1/4	2-1/4	(1) CL-1/2-13x1.50-SHCS
	CL-50-SAC	5-1/2						2-1/8				4-11/16				2-1/2	
	CL-60-SAC	7-1/8						3				6-5/16				2-9/16	
HEAVY	CL-70-SAC	5-1/2	1-1/4	1-3/4	—	—	—	1-3/8	5/8	—	5/16	4-1/2	5/16	5/16	3/8	3-9/32	(1) CL-5/8-11x2.00-SHCS
	CL-90-SAC	8-1/4						4				7-1/4				3	(2) CL-5/8-11x2.00-SHCS

FIXED — HIGH NOSE

MINI	CL-5-SFC	1-13/16	5/8	1	1	1-3/4	11/16	—	—	7/16	1/4	1-5/16	5/32	—	—	1-15/32	(2) CL-5/16-18x1.00-FHSS
STANDARD	CL-45-SFC	2-11/16	7/8	1-1/2	2	3	1	—	—	5/8	5/16	1-7/8	1/4	—	—	2-3/16	(2) CL-1/2-13x1.38-FHSS
HEAVY	CL-75-SFC	3-1/2	1-1/4	1-3/4	2	3-1/4	1-1/4	—	—	3/4	5/16	2-1/2	5/16	—	—	2-7/8	(2) CL-5/8-11x2.00-FHSS

FIXED — LOW NOSE

MINI	CL-0-SFC	1-13/16	5/8	1	1	1-3/4	11/16	—	—	7/16	1/4	1-5/16	5/32	1/8	1/8	1-15/32	(2) CL-5/16-18x1.00-FHSS
STANDARD	CL-40-SFC	2-11/16	7/8	1-1/2	2	3	1	—	—	5/8	5/16	1-7/8	1/4	1/4	1/4	2-3/16	(2) CL-1/2-13x1.38-FHSS
HEAVY	CL-70-SFC	3-1/2	1-1/4	1-3/4	2	3-1/4	1-1/4	—	—	3/4	5/16	2-1/2	5/16	5/16	3/8	2-7/8	(2) CL-5/8-11x2.00-FHSS

DOUBLE — HIGH NOSE

MINI	CL-5-SDC	2-15/16	5/8	1	1	1-3/4	11/16	—	—	7/16	1/4	2	5/32	—	—	1-15/32	(2) CL-5/16-18x1.00-FHSS
STANDARD	CL-45-SDC	4-3/8	7/8	1-1/2	2	3	1	—	—	5/8	5/16	2-3/4	1/4	—	—	2-3/16	(2) CL-1/2-13x1.38-FHSS
HEAVY	CL-75-SDC	5-3/4	1-1/4	1-3/4	2	3-1/4	1-1/4	—	—	3/4	5/16	3-3/4	5/16	—	—	2-7/8	(2) CL-5/8-11x2.00-FHSS

DOUBLE — LOW NOSE

MINI	CL-0-SDC	2-15/16	5/8	1	1	1-3/4	11/16	—	—	7/16	1/4	2	5/32	1/8	1/8	1-15/32	(2) CL-5/16-18x1.00-FHSS
STANDARD	CL-40-SDC	4-3/8	7/8	1-1/2	2	3	1	—	—	5/8	5/16	2-3/4	1/4	1/4	1/4	2-3/16	(2) CL-1/2-13x1.38-FHSS
HEAVY	CL-70-SDC	5-3/4	1-1/4	1-3/4	2	3-1/4	1-1/4	—	—	3/4	5/16	3-3/4	5/16	5/16	3/8	2-7/8	(2) CL-5/8-11x2.00-FHSS

Carr Lane®
MANUFACTURING CO.
4200 Carr Lane Ct., P.O. Box 191970
St. Louis, Missouri 63119-7970 USA
Phone: 314-647-6200, FAX: 314-647-5736
Web Site: www.carrlane.com

(Rev. 7-02)

SERRATED EDGE CLAMPS

Serrated Adjustable Edge Clamp

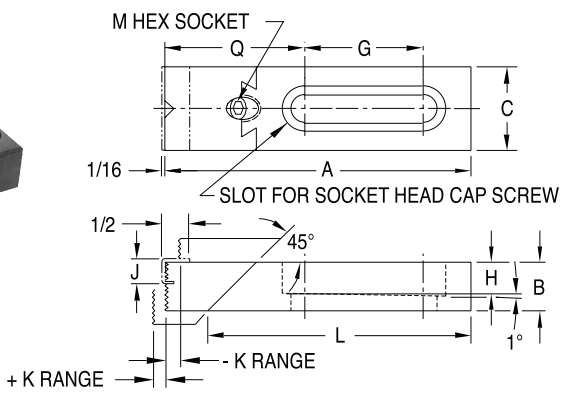

High Nose

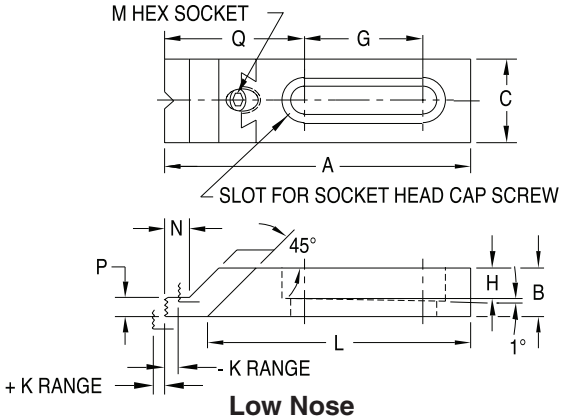

Low Nose

Serrated Fixed Edge Clamp

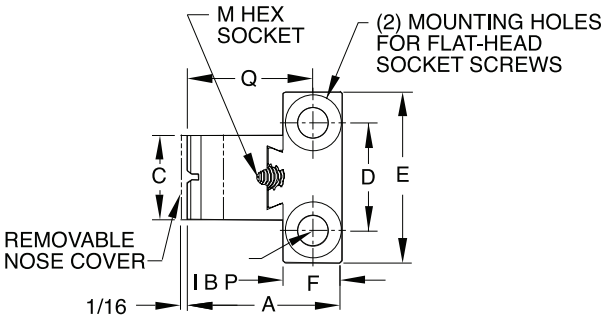

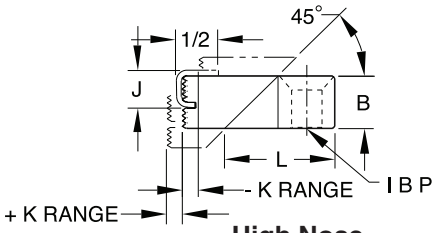

High Nose

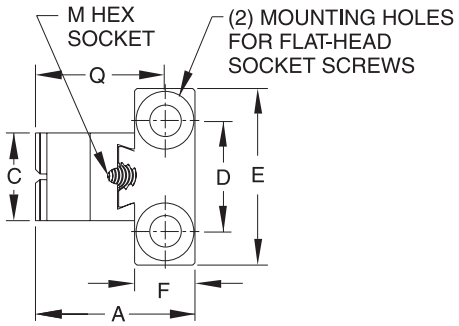

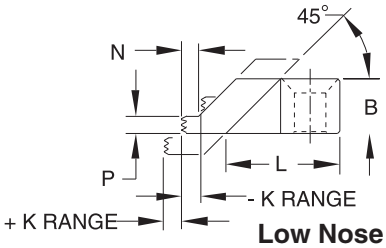

Low Nose

Serrated Double Edge Clamp

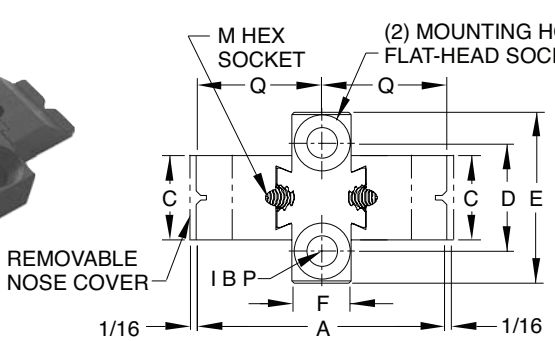

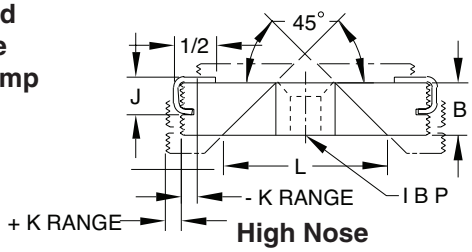

High Nose

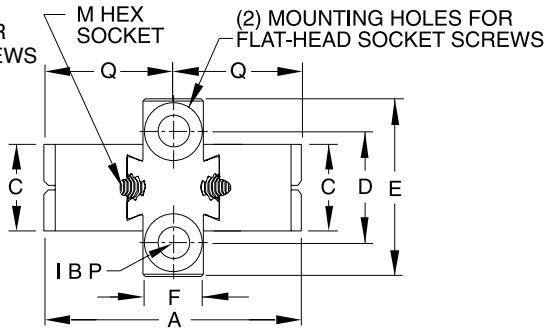

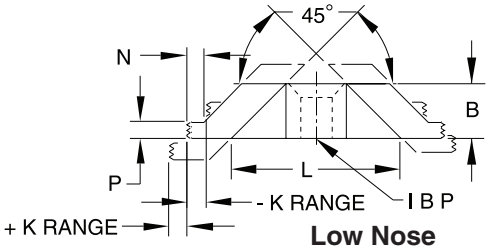

Low Nose

Carr Lane MANUFACTURING CO.
4200 Carr Lane Ct., P.O. Box 191970
St. Louis, Missouri 63119-7970 USA
Phone: 314-647-6200, FAX: 314-647-5736
Web Site: www.carrlane.com

(Rev. 3-07)

SCREW-CLAMP ADAPTORS

1018 STEEL, BLACK OXIDE FINISH

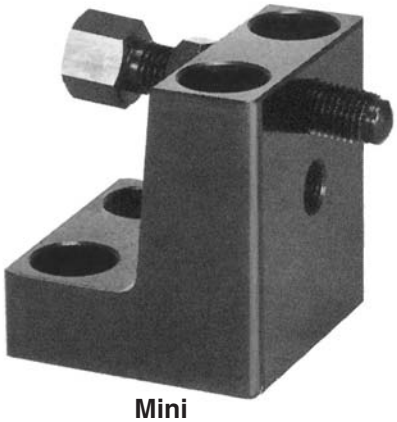

Screw-Clamp Adaptor

Mini
Standard
Heavy

Extremely useful mounting adaptor for screw clamps. Accepts any of the four types of screw clamp shown below (order separately). These screw clamps all use our patented left-hand-thread swivel feet (the ball end of the body screws into the foot for easy installation and removal). The adaptor has two tapped holes to allow installing a screw clamp at either of two heights. The tapped holes are angled slightly downward to provide some downthrust force. See pages 64, 66-67 and 70 of tooling-component catalog section for complete dimensions and additional sizes of screw clamps.

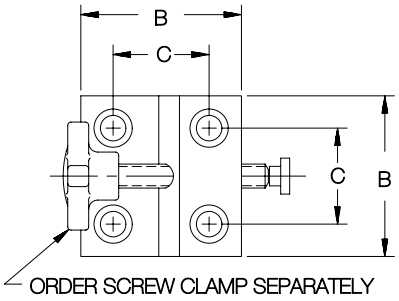

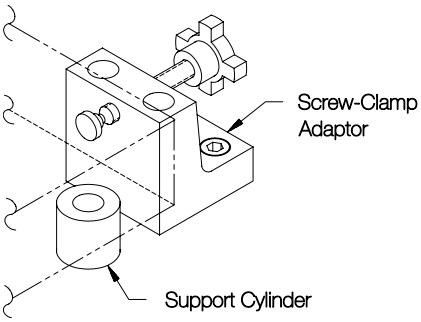

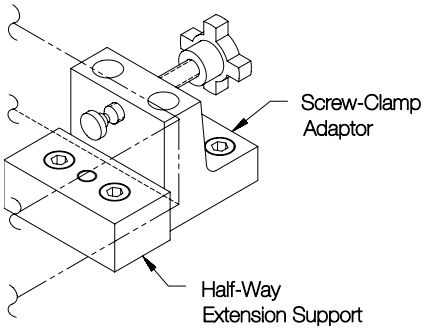

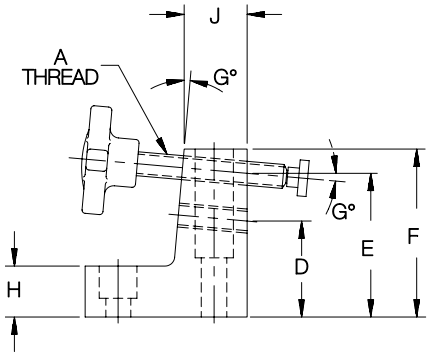

Almost any support can be used together with a Screw Clamp Adaptor. For additional height, a Support Riser Block can be used underneath the adaptor.

SCREW CLAMP ADAPTORS

SIZE	PART NO.	A	B	C	D	E	F	G	H	J	SOCKET-HEAD CAP SCREWS (2 EACH REQD)
MINI	CL-MF25-1251	5/16-18	1-3/4	1	1-1/4	1-3/4	2-1/4	3°	5/8	13/16	CL-5/16-18x1.12-SHCS CL-5/16-18x1.50-SHCS
STANDARD	CL-MF40-1251	1/2-13	3-3/8	2	2	3	3-5/8	5°	1-1/8	1-5/16	CL-1/2-13x1.75-SHCS CL-1/2-13x2.75-SHCS
HEAVY	CL-MF50-1251	5/8-11	3-3/8	2	2	3	3-5/8	5°	1-1/8	1-5/16	CL-5/8-11x2.00-SHCS CL-5/8-11x3.00-SHCS

Knob Shoe Assembly

KNOB SHOE ASSEMBLIES

SIZE	PART NO.	THREAD SIZE	LENGTH UNDER HEAD	HEAD HEIGHT	HEAD DIA	FOOT DIA
MINI	CL-4-KSA	5/16-18	2-1/4	3/4	1-3/4	1/2
STANDARD	CL-9-KSA	1/2-13	3-9/16	1-1/4	2-1/8	3/4
HEAVY	CL-11-KSA	5/8-11	3-5/16	1-1/2	2-3/4	15/16

Swivel Screw Clamp

SWIVEL SCREW CLAMPS

MINI	CL-27-SSC	5/16-18	2-3/32	—	—	1/2
STANDARD	CL-35-SSC	1/2-13	3-1/16	—	—	3/4
HEAVY	CL-38-SSC	5/8-11	3-3/64	—	—	15/16

Swivel Head Screw

SWIVEL HEAD SCREWS

MINI	CL-22-SHS	5/16-18	2-3/32	3/8	1-1/8	1/2
STANDARD	CL-29-SHS	1/2-13	3-1/16	1/2	1-1/4	3/4
HEAVY	CL-32-SHS	5/8-11	3-3/64	1/2	1-1/4	15/16

Adjustable-Torque Thumb Screw

ADJUSTABLE-TORQUE THUMB SCREWS

MINI	CL-527-TSB	5/16-18	2-7/8	21/32	7/8	1/2
STANDARD	CL-830-TSB	1/2-13	3-1/8	21/32	1-3/16	3/4
HEAVY	CL-1030-TSB	5/8-11	3-1/8	21/32	1-3/16	15/16

Carr Lane®
MANUFACTURING CO.
4200 Carr Lane Ct., P.O. Box 191970
St. Louis, Missouri 63119-7970 USA
Phone: 314-647-6200, FAX: 314-647-5736
Web Site: www.carrlane.com

(Rev. 3-07)

TOGGLE-CLAMP ADAPTORS

1018 STEEL, BLACK OXIDE FINISH

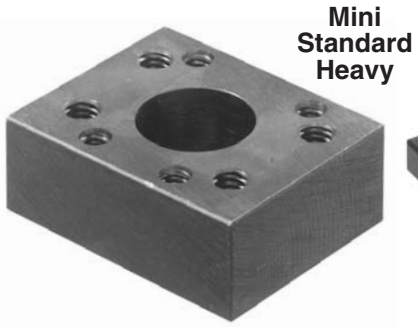

Fixed Adaptor

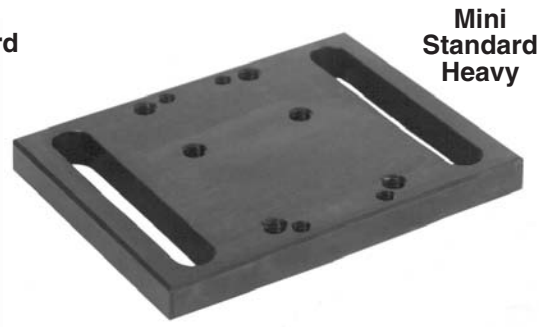

Slotted Adaptor

Either one of these adaptors holds all of the toggle clamps listed below. Fasten clamp to the adaptor using only two socket-head cap screws, the two nearest the clamping point. See page 55 for Standard Adjustable Spindles. For additional height, use Clamp or Support Riser Blocks (pages 34-35). To place a clamp between grid points, use an Extension Support (page 36). See toggle-clamp catalog for complete clamp dimensions and specifications.

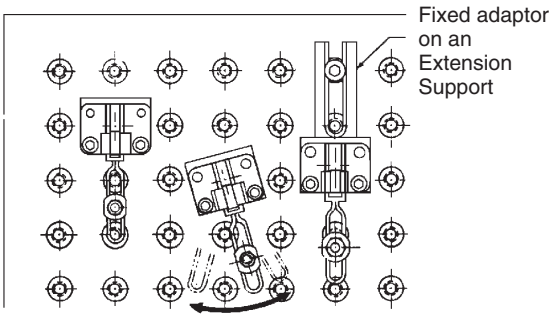

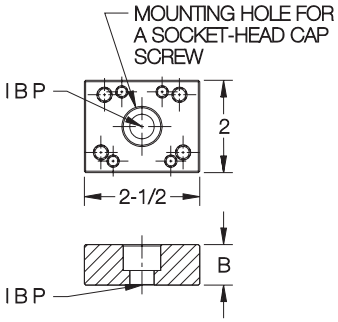

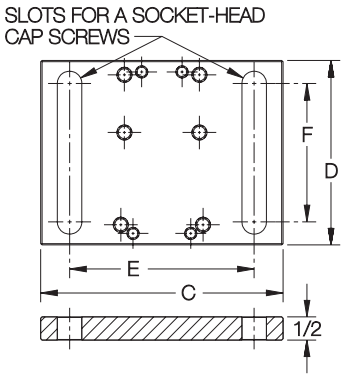

FIXED ADAPTORS

SIZE	PART NO.	A	B	SOCKET-HEAD CAP SCREW (1 REQD)
MINI	CL-MF25-5401	5/16-18	3/4	CL-5/16-18x1.12-SHCS
STANDARD	CL-MF40-5401	1/2-13	7/8	CL-1/2-13x1.50-SHCS
HEAVY	CL-MF50-5401	5/8-11	7/8	CL-5/8-11x1.50-SHCS

SLOTTED ADAPTORS

SIZE	PART NO.	A	C	D	E	F	SOCKET-HEAD CAP SCREWS (2 or 4 REQD)
MINI	CL-MF25-5402	5/16-18	3-3/4	2-3/4	3	2-1/8	(4) CL-5/16-18x1.38-SHCS
STANDARD	CL-MF40-5402	1/2-13	5-1/4	4	4	3	(2) CL-1/2-13x1.50-SHCS
HEAVY	CL-MF50-5402	5/8-11		4-1/4			(2) CL-5/8-11x2.00-SHCS

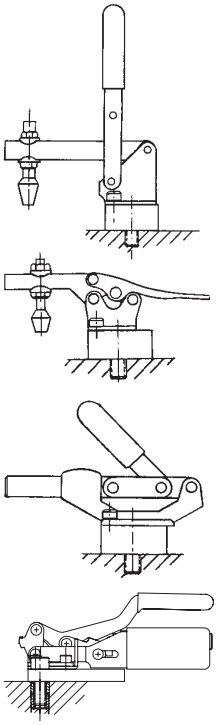

VERTICAL HANDLE TOGGLE CLAMPS

SIZE	PART NO.	MAXIMUM CAPACITY (LBS)	CATALOG PAGE	SOCKET-HEAD CAP SCREWS (2 REQD)	STANDARD ADJUSTABLE SPINDLE
ALL	CL-450-VTC	500	15TC	CL-1/4-20x.62-SHCS	CL-516212-SA
	CL-452-VTC				
	CL-453-VTC				
	CL-1000-PTC		48TC		
	CL-650-VTC	750	16TC	CL-5/16-18x.62-SHCS	CL-38314-SA
	CL-652-VTC				
	CL-650-ATC		19TC		
	CL-850-VTC	1000	17TC	CL-5/16-18x.75-SHCS	CL-12314-SA
	CL-2000-PTC		52TC		

HORIZONTAL HANDLE TOGGLE CLAMPS

ALL	CL-450-HTC	500	7TC	CL-1/4-20x.62-SHCS	CL-516212-SA
	CL-550-HTC	750	7TC	CL-5/16-18x.62-SHCS	CL-38314-SA
	CL-550-AHTC		9TC		
	CL-650-HTC	1000	8TC	CL-5/16-18x.62-SHCS	CL-12314-SA

PUSH/PULL TOGGLE CLAMPS

ALL	CL-275-SPC	600	34TC	CL-5/16-18x.75-SHCS	CL-38314-SA
	CL-250-SPC	800	32TC	CL-5/16-18x.75-SHCS	
	CL-200-PC	850	36TC	CL-5/16-18x.75-SHCS	
	CL-1500-PPC		54TC		
	CL-350-SPC	2500	32TC	CL-5/16-18x.75-SHCS	

TOGGLE EDGE CLAMPS

ALL	CL-550-ATEC	750	38TC	CL-5/16-18x.62-SHCS	—

Carr Lane®
MANUFACTURING CO.
4200 Carr Lane Ct., P.O. Box 191970
St. Louis, Missouri 63119-7970 USA
Phone: 314-647-6200, FAX: 314-647-5736
Web Site: www.carrlane.com

(Rev. 7-05)

POWER WORKHOLDING

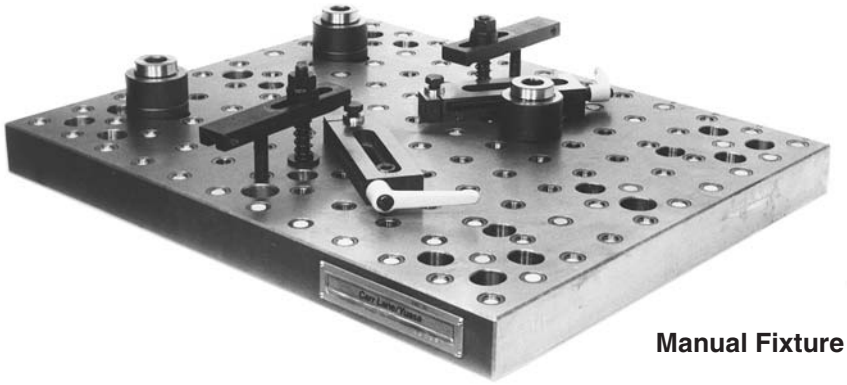

Manual Fixture

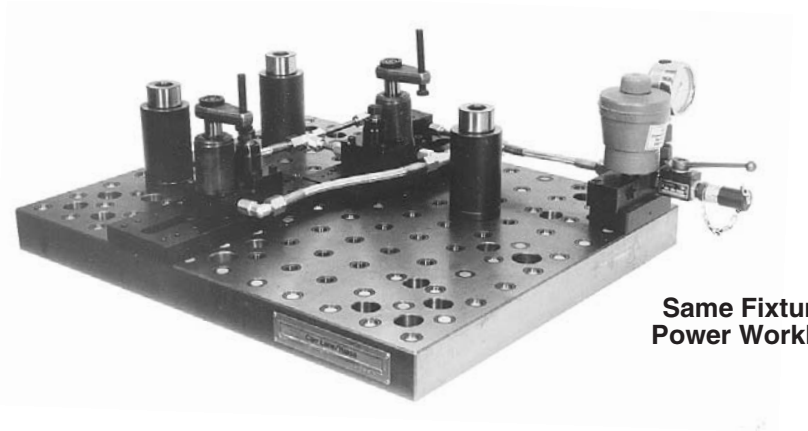

Same Fixture with Power Workholding

Power workholding and modular fixturing make an excellent combination. Power workholding is an obvious choice to reduce cycle time in high-volume and long-run production. Although clamping speed is an obvious and important advantage, power workholding's biggest payoff usually is improved workpiece accuracy and the elimination of scrap. The improved workpiece quality is due consistent, controlled clamping, combined with automatically adjusted precision work supports that resist workpiece deformation during machining. Since power clamps can be used easily on modular fixtures, even short-run jobs can greatly benefit from power workholding.

From these two examples, you can see that assembling a modular workholder for a power-workholding operation is basically the same process as that for a manual fixture. There are slight differences in the types of components used to position, clamp, and support the workpiece.

Power clamps, supports, and accessories used with modular fixtures can be reused, just as any other modular components. Therefore, modular fixturing is a very inexpensive way to achieve the significant benefits of power workholding: improved part quality and reduced manufacturing time.

See SWIFTSURE catalog section for electric and air power units. Once installed on a machine tool, one power unit can handle any modular power-workholding fixture on that machine.

Fixture hose is a unique small-diameter, braided-steel-covered hydraulic hose that is ideally suited for modular-fixturing applications. This hose can be installed in the same tight-fit areas as custom-bent tubing, yet installs as easily as conventional hydraulic hose. Keeping a variety of different-length fixture hoses on hand ensures that virtually any modular power-workholding fixture can be assembled without custom fabrication.

CLR-9-FH	9" long
CLR-12-FH	12" long
CLR-15-FH	15" long
CLR-18-FH	18" long
CLR-24-FH	24" long

For fittings, hoses, gauges, and other accessories, see SWIFTSURE catalog section.

Carr Lane MANUFACTURING CO.
4200 Carr Lane Ct., P.O. Box 191970
St. Louis, Missouri 63119-7970 USA
Phone: 314-647-6200, FAX: 314-647-5736
Web Site: www.carrlane.com

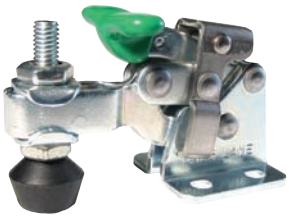

Carr Lane's TOGGLE CLAMPS

HORIZONTAL-HANDLE HOLD-DOWN CLAMPS, VERTICAL-HANDLE HOLD-DOWN CLAMPS, PUSH/PULL PLUNGER CLAMPS, LATCH-ACTION CLAMPS, TOGGLE PLIERS, AIR-POWERED CLAMPS, AND ACCESSORIES.

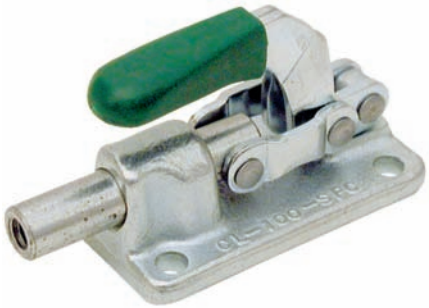

MANUFACTURING CO.
4200 Carr Lane Ct., P.O. Box 191970
St. Louis, Missouri 63119-7970 USA
Phone: 314-647-6200, FAX: 314-647-5736
Web Site: www.carrlane.com

Authorized distributor:

PRINTED IN U.S.A. 7308-796 COPYRIGHT 1996 CARR LANE MANUFACTURING CO.

GENERAL INFORMATION

TOGGLE-ACTION PRINCIPLES:

A toggle clamp is a quick-acting mechanical linkage where two of the elements make up a toggle action. Actuating the clamp first moves it into position, then applies clamping force by compressing or stretching the linkage elements after contacting the workpiece, then positively locks it by moving the toggle action's center pivot past the centerline of the other two pivots, against a stop.

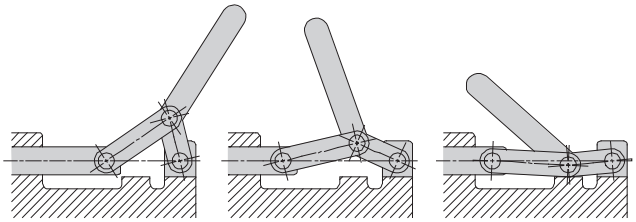

1 Moving into position — *2 Applying clamping force* — *3 Locking over center*

HOLDING CAPACITY:

The "holding capacity" listed for each clamp refers to the maximum external force that clamp can safely resist in its locked position without incurring any permanent deformation. For hold-down clamps, holding capacity is measured with the spindle as close as possible to the handle, and will be less at the end of the clamping arm.

Spindle position for maximum capacity — *Spindle position for maximum reach*

CLAMPING FORCE:

Clamping force, the amount of force actually applied to the workpiece by closing and locking the clamp, is generally less than the stated holding capacity. This allows the clamp to have ample capacity to resist external machining forces. Actual clamping force depends on many factors including: spindle position, proper spindle-height adjustment, spindle cushioning (uncushioned hex-head spindles provide the greatest force), workpiece material, and the clamp's mechanical advantage. In most cases, roughly 1/2 of the stated holding capacity can be applied by hand with medium effort.

OPEN-ARM CLAMPS:

Open-arm hold-down clamps offer maximum flexibility and adjustability. Two flanged washers hold the spindle in place anywhere along the arm by tightening the jam nuts.

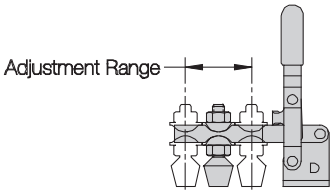

SOLID-ARM CLAMPS:

Solid-arm hold-down clamps are easily customized to a particular application. Using the weld-on bolt retainer, you can locate the spindle permanently in one place. The solid-arm version allows mounting the spindle at an angle, or shortening the clamping arm.

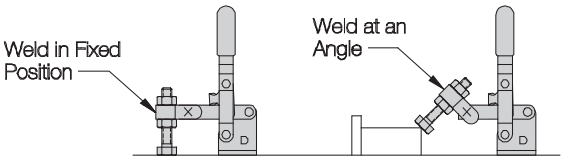

TOP-GRADE MATERIALS:

Carr Lane toggle clamps are made from only the finest-quality materials. Steel clamps are made from various types including 1008, 1010, 1018, and other fine steels. Pivot pins on most clamp models are 400-series stainless steel for extra durability. Many pivot points have hardened steel bushings for long life. Forged steel components, such as those on toggle pliers and push/pull clamps, are made from high-carbon steel. Many push/pull-clamp bases are made of nodular iron for wear resistance.

FINISHES:

Most steel clamps are zinc plated, unless otherwise noted. Virtually all clamps are also available with a black oxide finish as specials.

STAINLESS STEEL:

Many toggle-clamp models are available in 300-series stainless steel. These corrosion-resistant clamps are useful in chemical environments, plating operations, food processing, salt-spray environments, medical equipment, electronics fixturing, EDM fixturing, and marine environments. Various stainless steel grades, including 303 and 304, are used. Clamps normally furnished with a flat-cushion spindle in the steel version are supplied with a stainless steel hex-head spindle. Other clamps are available in stainless steel as specials.

AIR-POWERED CLAMPS:

The air cylinders on power toggle clamps have Buna N seals, rated for operating temperatures of -20° to +200° F. Note: Zinc plating also deteriorates at temperatures above 250°F.

MANUFACTURING CO.
4200 Carr Lane Ct., P.O. Box 191970
St. Louis, Missouri 63119-7970 USA
Phone: 314-647-6200, FAX: 314-647-5736
Web Site: www.carrlane.com

INDEX

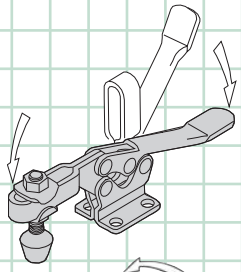

Horizontal-Handle Hold-Down Clamps . . 3-12

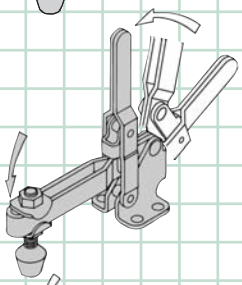

Vertical-Handle Hold-Down Clamps . . . 13-40

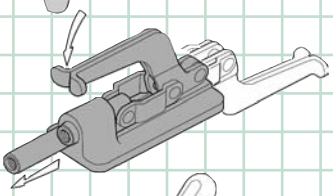

Push / Pull Clamps 41-53

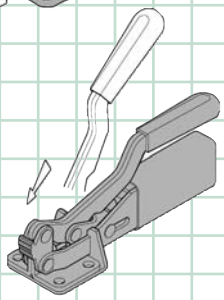

Toggle Edge Clamps 54-55

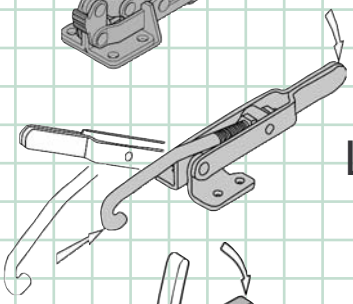

Latch-Action Clamps 56-63

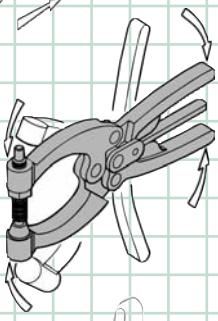

Toggle Pliers 64-68

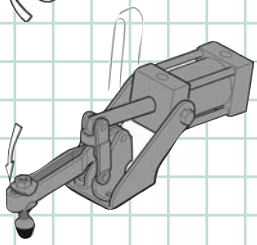

Air-Powered Clamps. 69-77

Toggle Clamp Accessories.....78-82

MANUFACTURING CO.
4200 Carr Lane Ct., P.O. Box 191970
St. Louis, Missouri 63119-7970 USA
Phone: 314-647-6200, FAX: 314-647-5736
Web Site: www.carrlane.com

TOGGLE CLAMP CONVERSION CHART

Reference Part No.	Carr Lane Part No.	Page No.
AO-100*	CL-1000-PTC	72
AO-1200*	CL-3000-PTC	74
AO-200*	CL-1000-PTC	72
AO-2000(HD)*	CL-3000-PTC	74
AO-400*	CL-2000-PTC	73
AO-800*	CL-2000-PTC	73
C-800	CL-850-VTC	22
GLBU1*	CL-111-HVTC	31
GLBU1-AW-HW*	CL-101-HVTC	29
GLBU3*	CL-311-HVTC	31
GLBU3-AW-HW*	CL-301-HVTC	29
GLBU5*	CL-511-HVTC	31
GLBU5-AW-HW*	CL-501-HVTC	29
GLBU6*	CL-611-HVTC	31
GLBU6-AW-HW*	CL-601-HVTC	29
GU1*	CL-120-HVTC	30
GU1-B*	CL-110-HVTC	30
GU3*	CL-320-HVTC	30
GU3-B*	CL-310-HVTC	31
GU5*	CL-520-HVTC	30
GU5-B*	CL-510-HVTC	30
GU6*	CL-620-HVTC	30
GU6-B*	CL-610-HVTC	30
H-100	CL-250-HTC	4
H-200	CL-350-HTC	6
H-200(SS)	CL-350-HTC-S	6
H-400*	CL-450-HTC	7
H-400(B)	CL-450-HTC	7
H-400(SS)*	CL-450-HTC-S	7
H-600	CL-550-HTC	7
H-600(SS)	CL-550-HTC-S	7
LUP-1203	CL-450-PL	67
LUP-800	CL-254-PL	66
LUP-800-2S	CL-254-PL-2	66
P-1200	CL-250-PL	66
P-1203	CL-450-PL	67
P-400*	CL-50-PL	65
P-400-1*	CL-50-PL	65
P-400-2*	CL-50-PL-2	65
P-400-2S*	CL-50-PL-3	65
P-800	CL-254-PL	66
P-800-2S	CL-254-PL-2	66
PCH-101	CL-250-PA	57
PCH-101(SS)	CL-250-PA-S	57
PCH-200	CL-250-PA	57
PH & PL-1600	CL-250-PL	66
S-100	CL-251-VTC	16
S-200*	CL-451-VTC	18
S-400*	CL-651-VTC	13
T-100	CL-252-VTC	16
T-200	CL-452-VTC	18
T-400	CL-652-VTC	20
V-100	CL-250-VTC	16
V-100(SS)	CL-250-VTC-S	16
V-1200*	CL-1050-VTC	24
V-200*	CL-453-VTC	18
V-200(SS)*	CL-450-VTC-S	18
V-400*	CL-650-VTC	20
V-400(SS)*	CL-650-VTC-S	20
VC-200*	CL-350-VTC	18
VC-400*	CL-550-VTC	20
102111	CL-3166-TW	82
102208	CL-832208-FC	82
102911	CL-3166-TW-S	82
105106	CL-832-TW	82
105203	CL-832203-SA	73
105208*	CL-832208-FC	79
105906	CL-832-TW-S	82
110122	CL-511000-BR	82
201	CL-150-VTC	15
201-B	CL-151-VTC	15
201-SS	CL-150-VTC-S	15
201-T	CL-152-VTC	15
201208	CL-316112-FC	79
201943	CL-316100-SA-S	78
202	CL-250-VTC	16
202-B	CL-251-VTC	16
202-SS	CL-250-VTC-S	16
202-T	CL-252-VTC	16
202-U*	CL-253-VTC	16
202-USS	CL-253-VTC-S	16
202203*	CL-14200-SA	78
202208	CL-14112-FC	79

Reference Part No.	Carr Lane Part No.	Page No.
202943*	CL-14112-SA-S	79
205-S	CL-150-HTC	4
205-SB	CL-151-HTC	4
205-SL	CL-153-HTC	4
205-SR	CL-152-HTC	4
205-SSS	CL-150-HTC-S	4
205-U	CL-250-HTC	4
205-UB	CL-251-HTC	4
205-UL	CL-253-HTC	4
205-UR	CL-252-HTC	4
205-USS	CL-250-HTC-S	4
205105	CL-142000-BR	82
205203	CL-14112-SA	78
205943*	CL-83234-SA-S	78
206-HSS*	CL-51-TC	5
206-SS*	CL-51-TC	5
207-L	CL-353-VTC	18
207-LB*	CL-351-VTC	18
207-LR*	CL-350-LVTC	18
207-S	CL-350-VTC	18
207-SB	CL-351-VTC	18
207-TL*	CL-352-VTC	18
207-TS	CL-352-VTC	18
207-TU	CL-452-VTC	18
207-TUL*	CL-452-VTC	18
207-U	CL-450-VTC	18
207-UB	CL-451-VTC	18
207-UL	CL-453-VTC	18
207-ULB*	CL-451-VTC	18
207-UR*	CL-450-LVTC	18
207105	CL-518000-BR	82
207203	CL-516212-SA	78
207206	CL-14200-SF	81
207943*	CL-516212-SA-S	78
210-S	CL-550-VTC	20
210-SB	CL-551-VTC	20
210-SR*	CL-550-LVTC	20
210-TS	CL-552-VTC	20
210-TU	CL-652-VTC	20
210-U	CL-650-VTC	20
210-UB	CL-651-VTC	20
210-UR*	CL-650-LVTC	20
210-USS	CL-650-VTC-S	20
210114	CL-316000-BR	81
210203*	CL-38314-SA	78
210206	CL-38314-SF	80
210208	CL-38314-CC	79
211208*	CL-14200-CC	79
213-U*	CL-260-HTC	5
213-USS*	CL-260-HTC-S	5
213208	CL-14200-CC	79
213943	CL-832203-SA-S	78
215-S	CL-300-HTC	6
215-U	CL-350-HTC	6
215-UB	CL-351-HTC	6
215-USS	CL-350-HTC-S	6
215105*	CL-148-TW	82
215208	CL-14200-FC	79
215905*	CL-148-TW-S	82
217-U*	CL-350-HTC	6
217-USS*	CL-350-HTC-S	6
220	CL-600-VTC	25
220203	CL-12314-SA	78
220208*	CL-38314-CC	79
225-U	CL-450-HTC	7
225-UB	CL-451-HTC	7
225-UR*	CL-451-HTC	7
225-USS	CL-450-HTC-S	7
225208	CL-518208-FC	79
227-U*	CL-450-HTC	7
227-USS*	CL-450-HTC-S	7
227943*	CL-516212-SA-S	78
228	CL-601-VTC	25
235-U	CL-550-HTC	7
235-UB	CL-551-HTC	7
235-UR*	CL-550-HTC	7
235-USS	CL-550-HTC-S	7
235106	CL-3811-TW	82
235906	CL-3811-TW-S	82
237-U*	CL-550-HTC	7
237-USS*	CL-550-HTC-S	7
237943*	CL-38314-SA-S	78
240203*	CL-38314-SA	78

Reference Part No.	Carr Lane Part No.	Page No.
240208*	CL-38314-FC	79
245-S	CL-600-HTC	9
245-U	CL-650-HTC	9
245943*	CL-12234-SA-S	78
247-S	CL-750-VTC	22
247-SB	CL-751-VTC	22
247-U	CL-850-VTC	22
247-UB	CL-851-VTC	22
247109	CL-1213-TW	82
247110	CL-113000-BR	82
250*	CL-800-VTC	25
250-G	CL-800-VTC	25
250121*	CL-113000-BR	82
250203	CL-58438-SA	78
250206*	CL-44-SSC	81
258*	CL-801-VTC	25
258-G	CL-801-VTC	25
267	CL-950-VTC	24
267-U	CL-1050-VTC	24
267102	CL-5811-TW	81
301	CL-150-PA	63
301-SS	CL-150-PA-S	63
305-U	CL-200-VTC	15
305-UR*	CL-200-LVTC	15
305-USS	CL-200-VTC-S	15
305203*	CL-316112-SA	78
305208	CL-316112-CC	79
307-U	CL-300-VTC	32
307-UR*	CL-300-LVTC	32
307-USS	CL-300-VTC-S	32
309-U	CL-500-VTC	32
309-UR*	CL-500-LVTC	32
309-USS	CL-500-VTC-S	32
311	CL-170-PA	73
317	CL-375-HTC	12
317-U	CL-475-HTC	12
323*	CL-100-PA	58
323-MSS*	CL-100-PA-S	58
323-SS	CL-100-PA-S	58
324*	CL-110-PA	62
324-SS*	CL-110-PA-S	62
325	CL-325-PL-S	68
325-SS	CL-325-PL-S	68
325203*	CL-12314-SA	78
331*	CL-200-PA	58
331-R*	CL-200-LPA	60
331-R-SS*	CL-200-LPA-S	60
331-SS*	CL-200-PA-S	58
334*	CL-210-PA	62
334-SS*	CL-210-PA-S	62
341*	CL-300-PA	58
341-R*	CL-300-LPA	60
341-R-SS*	CL-300-LPA-S	60
341-SS*	CL-300-PA-S	58
344*	CL-310-PA	62
344-SS*	CL-310-PA-S	62
345	CL-345-PL	68
345100	CL-345-PLA	68
351	CL-250-PA	57
351-B	CL-251-PA	57
351-R*	CL-257-PA	57
351-SS	CL-250-PA-S	57
375	CL-400-PA	59
375-R	CL-400-LPA	61
381	CL-350-PA	57
385	CL-500-PA	59
385-R	CL-500-LPA	61
385102	CL-500-PAA	59
424	CL-50-PL	65
424-2	CL-50-PL-2	65
424208	CL-14208-SA	78
431208	CL-14100-SA	78
441	CL-150-PL	65
441203*	CL-516212-SA	76
462	CL-254-PL	66
462-2	CL-254-PL-2	66
463	CL-454-PL	66
468	CL-254-PL	66
468206*	CL-38314-SF	81
474	CL-454-PL	67
486*	CL-550-PL	65
501*	CL-120-HVTC	30
501-B*	CL-110-HVTC	30

Reference Part No.	Carr Lane Part No.	Page No.
503*	CL-320-HVTC	30
503-B*	CL-310-HVTC	30
503-LB*	CL-311-HVTC	31
505*	CL-520-HVTC	30
505-B*	CL-510-HVTC	30
505-LB*	CL-511-HVTC	31
506*	CL-620-HVTC	30
506-B*	CL-610-HVTC	30
506-LB*	CL-611-HVTC	31
507107	CL-51610-TW	82
507206*	CL-516212-SF	82
507208	CL-516212-FC	79
507907	CL-51610-TW-S	81
509208	CL-516212-CC	79
527208	CL-38314-FC	79
548*	CL-501-HVTC	29
578*	CL-601-HVTC	29
588*	CL-601-HVTC	29
6001-M	CLM-60-SPC	42
6001-MMS*	CLM-60-SPC	42
601*	CL-50-SPC	42
601-0*	CL-51-SPC	42
601-M*	CLM-50-SPC	42
601-SS*	CL-50-SPC-S	42
6015	CL-100-SPC	43
6015-M	CLM-100-SPC	43
6015-MR	CLM-100-LSPC	43
6015-MRSS*	CL-100-LSPC-S	43
6015-R	CL-100-LSPC	43
6015-RSS	CL-100-LSPC-S	43
6015-SS	CL-100-SPC-S	43
602	CL-150-TPC	49
602-M	CLM-150-TPC	49
602-SS	CL-150-TPC-S	49
603*	CL-100-PC	50
603-M*	CLM-100-PC	50
603-MR	CL-100-LPC	50
603-R*	CL-100-LPC	50
604	CL-250-TPC	49
604-M	CLM-250-TPC	49
604-SS	CL-250-TPC-S	52
604106	CL-250-TPCA	52
605	CL-150-SPC	44
605-M	CLM-150-SPC	44
607*	CL-350-SPC	45
608	CL-200-PC	50
610*	CL-250-SPC	46
610-M*	CLM-250-SPC	46
620*	CL-275-SPC	49
620-M*	CLM-275-SPC	49
624	CL-350-TPC	52
624-M	CLM-350-TPC	52
624-SS	CL-350-TPC-S	52
628*	CL-276-SPC	49
630	CL-350-SPC	45
630-M	CLM-350-SPC	45
630-MR*	CL-350-LPC	45
630-M	CL-350-LPC	45
640*	CL-450-SPC	47
640-M*	CLM-450-SPC	47
650	CL-650-SPC	47
650-M	CLM-650-SPC	47
7-59	CL-1000-VCC	26
802*	CL-500-PTC	70
803*	CL-1500-PPC	76
807-L*	CL-1001-PTC	72
807-LH/T*	CL-1001-PTCH	72
807-UL*	CL-1000-PTC	72
807-ULH/T*	CL-1000-PTCH	72
810-S*	CL-2001-PTC	73
810-U*	CL-2000-PTC	73
812*	CL-400-PTC	70
816*	CL-600-PPC	75
847-S*	CL-2001-PTC	73
847-U*	CL-2000-PTC	73
858*	CL-3000-PTC	74
870*	CL-1011-POC	77
871*	CL-1010-POC	77
902*	CL-516212-SL	81
904*	CL-38314-SL	81

* Functionally equivalent, but differs in some dimension and/or specification. Please check catalog before ordering.

MANUFACTURING CO.
4200 Carr Lane Ct., P.O. Box 191970
St. Louis, Missouri 63119-7970 USA
Phone: 314-647-6200, FAX: 314-647-5736
Web Site: www.carrlane.com

(Rev. 11/09)

HORIZONTAL HANDLE

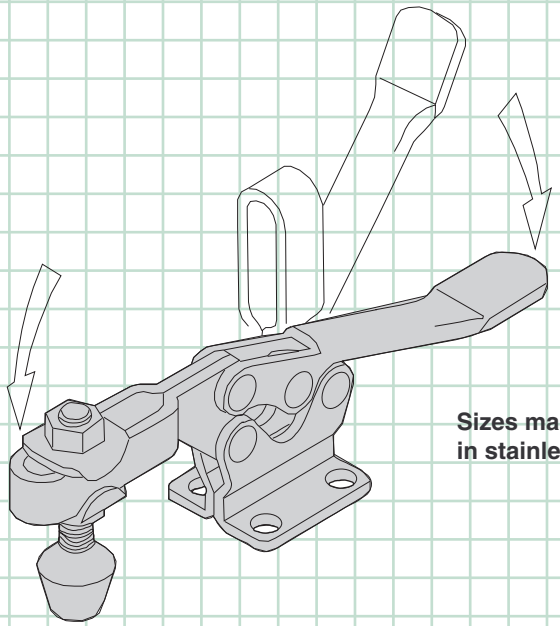

Sizes marked * are also available in stainless steel.

All Carr Lane toggle clamps are DFARS and RoHS compliant.

100 lbs*

200 lbs*

750 lbs*

60 lbs*

150 lbs*

500 lbs*

1000 lbs

Standard HTC Design

pp. 4-9

Most-popular and widest-range series of horizontal-handle hold-down clamps. Available in seven sizes, the smaller ones with a comfortable finger grip. Most sizes are available with either a flanged base or a straight base. Choice of solid arm, or open arm for spindle adjustment.

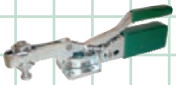

750 lbs

Automatically Adjusting

p. 10

Self-adjusting clamp automatically compensates for different workpiece heights without resetting the spindle. Clamping force is always consistent after setting once.

250 lbs

625 lbs

850 lbs

Low-Arm TC Design

p. 11

Simple, classic-design horizontal-handle clamps. Available in three sizes, with either a flanged base or a straight base.

375 lbs

Extra-Wide Opening

p. 12

Arm opens a full 185° for maximum loading clearance. Unique up-then-down handle motion. Handle locks at a 60° downward angle. Dual flanged bases allow mounting on either horizontal or vertical surfaces. Choice of solid arm, or open arm for spindle adjustment.

Carr Lane®

MANUFACTURING CO.

4200 Carr Lane Ct., P.O. Box 191970
St. Louis, Missouri 63119-7970 USA
Phone: 314-647-6200, FAX: 314-647-5736
Web Site: www.carrlane.com

HORIZONTAL HANDLE

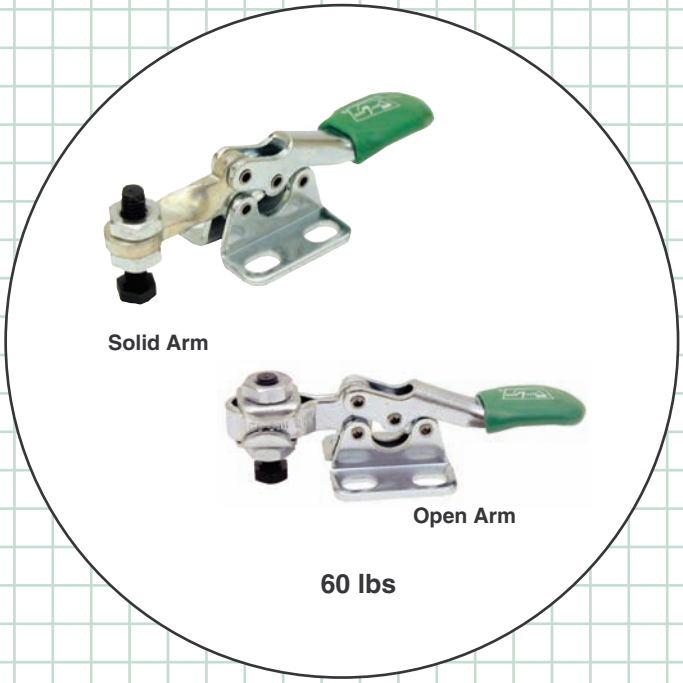

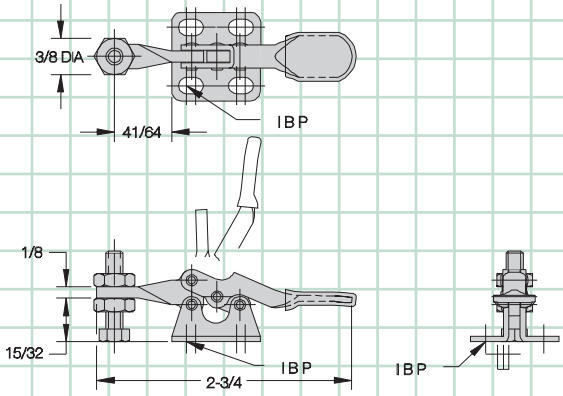

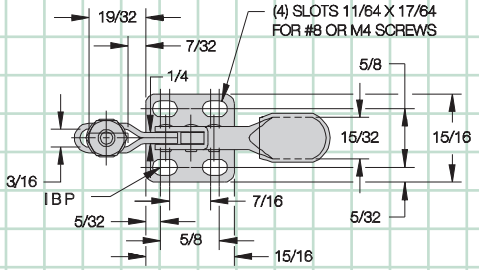

CL-150-HTC — Solid Arm, Flanged Base
CL-250-HTC — Open Arm, Flanged Base

Smallest hold-down clamp available. Choose either a solid arm, or an open arm for spindle adjustment. Arm opens 90° while handle moves 80°. Supplied with #8-32 nylon hex-head spindle CL-832203-SA. Open-arm versions also include (2) CL-832-TW flanged washers. Shipping weight 0.1 lbs.

Holding capacity: **60 lbs**

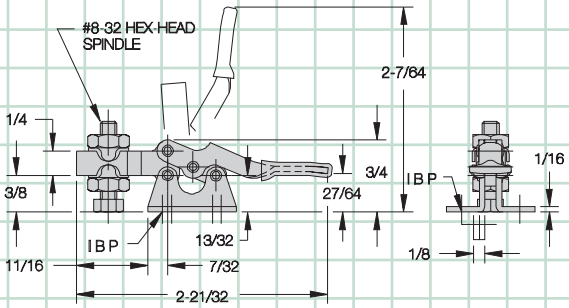

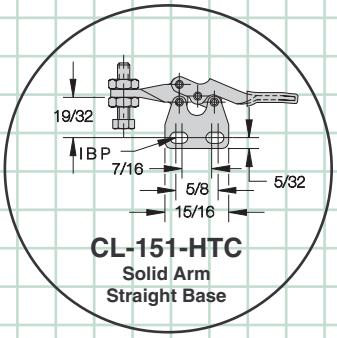

CL-151-HTC
Solid Arm
Straight Base

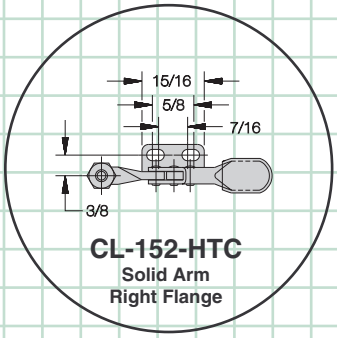

CL-152-HTC
Solid Arm
Right Flange

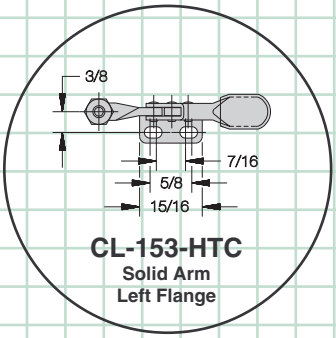

CL-153-HTC
Solid Arm
Left Flange

Also available in stainless steel . . .

CL-150-HTC-S

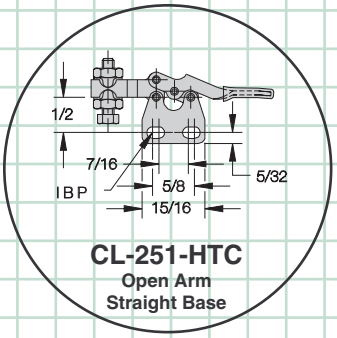

CL-251-HTC
Open Arm
Straight Base

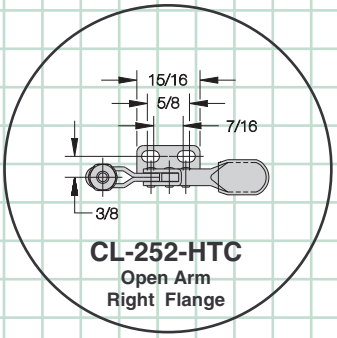

CL-252-HTC
Open Arm
Right Flange

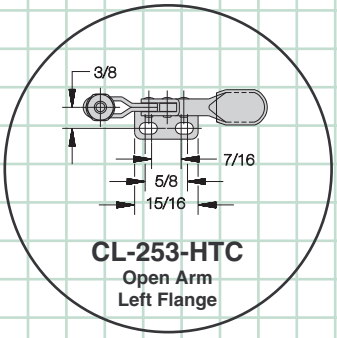

CL-253-HTC
Open Arm
Left Flange

CL-250-HTC-S

Carr Lane® MANUFACTURING CO.
4200 Carr Lane Ct., P.O. Box 191970
St. Louis, Missouri 63119-7970 USA
Phone: 314-647-6200, FAX: 314-647-5736
Web Site: www.carrlane.com

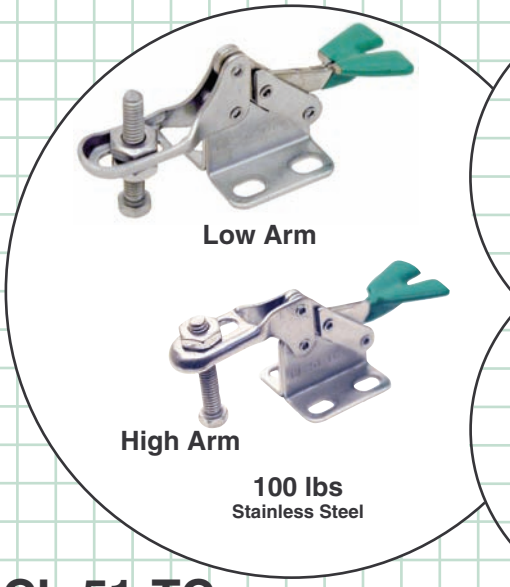

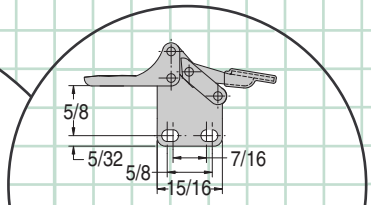

CL-52-TC
Low Arm, Straight Base

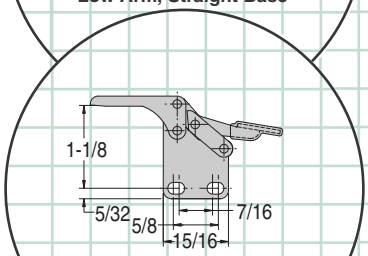

CL-54-TC
High Arm, Straight Base

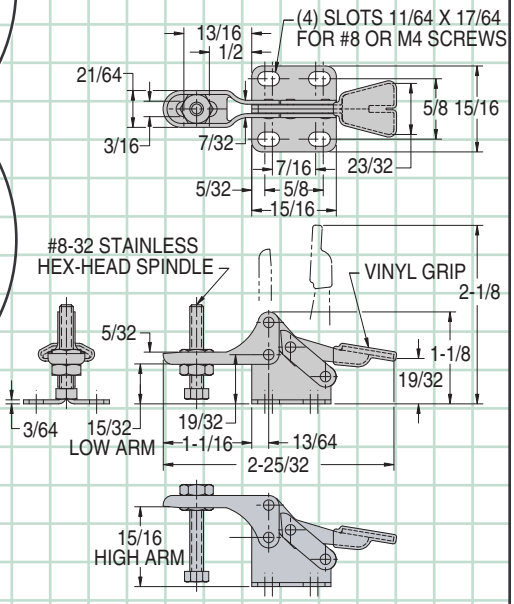

CL-51-TC — Low Arm, Flanged Base
CL-53-TC — High Arm, Flanged Base

Miniature stainless steel clamp with open arm for spindle adjustment. Perfect for electronics fixturing and other light-duty application. Arm opens 90˚ while handle moves 90˚. Supplied with #8-32 stainless hex-head spindle CL-832203-SA-S. Shipping weight 0.1 lbs.

Holding capacity: **100 lbs**

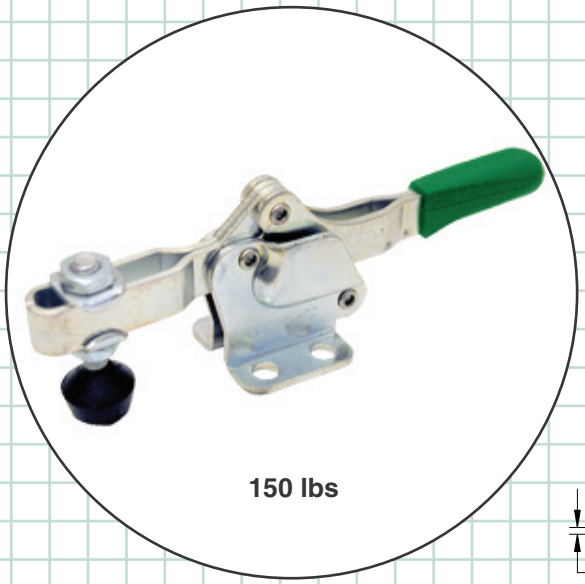

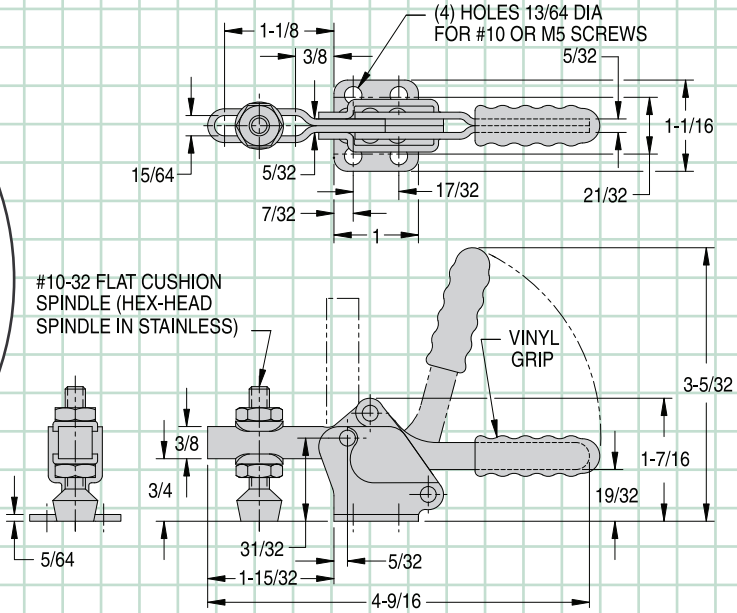

CL-260-HTC

An extremely powerful clamp for its small size. Open arm allows spindle adjustment. Arm opens 90° while handle moves 75°. Supplied with #10-32 flat-cushion spindle CL-316112-FC and (2) CL-3166-TW flanged washers. Shipping weight 0.2 lbs.

Holding capacity: **150 lbs**

Also available in stainless steel . . .

CL-260-HTC-S

Carr Lane®
MANUFACTURING CO.
4200 Carr Lane Ct., P.O. Box 191970
St. Louis, Missouri 63119-7970 USA
Phone: 314-647-6200, FAX: 314-647-5736
Web Site: www.carrlane.com

HORIZONTAL HANDLE

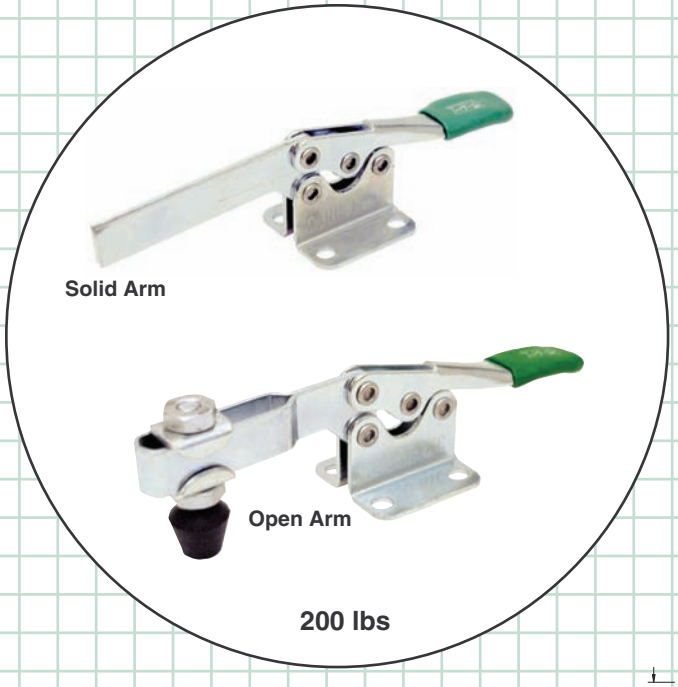

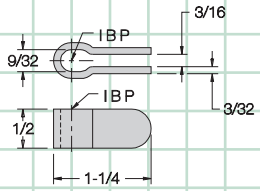

BOLT RETAINER
CL-142000-BR

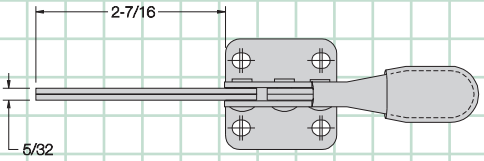

CL-300-HTC Solid Arm, Flanged Base
CL-350-HTC Open Arm, Flanged Base

Popular medium-duty clamp. Choose either a solid arm, or an open arm for spindle adjustment. Arm opens 86˚ while handle moves 60˚. Supplied with 1/4-20 short flat-cushion spindle CL-14112-FC. Solid-arm version supplied with CL-142000-BR bolt retainer. Open-arm version supplied with (2) CL-147-TW flanged washers. Shipping weight 0.3 lbs.

Holding capacity: **200 lbs**

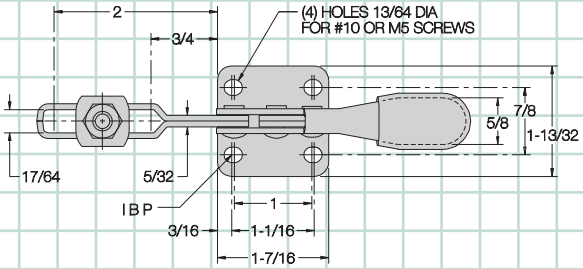

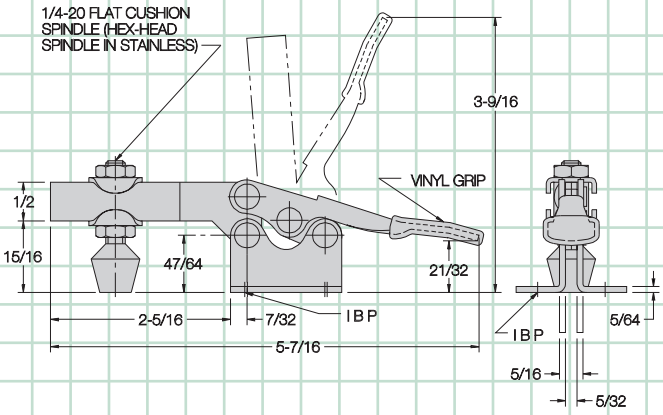

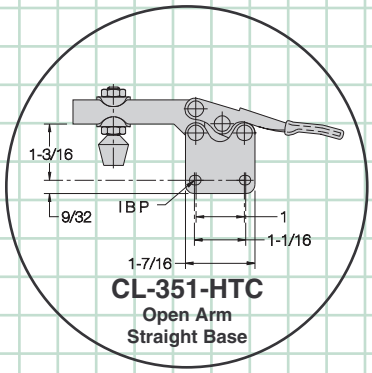

CL-351-HTC
Open Arm
Straight Base

Also available in stainless steel . . .

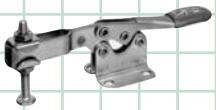

CL-350-HTC-S

MANUFACTURING CO.
4200 Carr Lane Ct., P.O. Box 191970
St. Louis, Missouri 63119-7970 USA
Phone: 314-647-6200, FAX: 314-647-5736
Web Site: www.carrlane.com

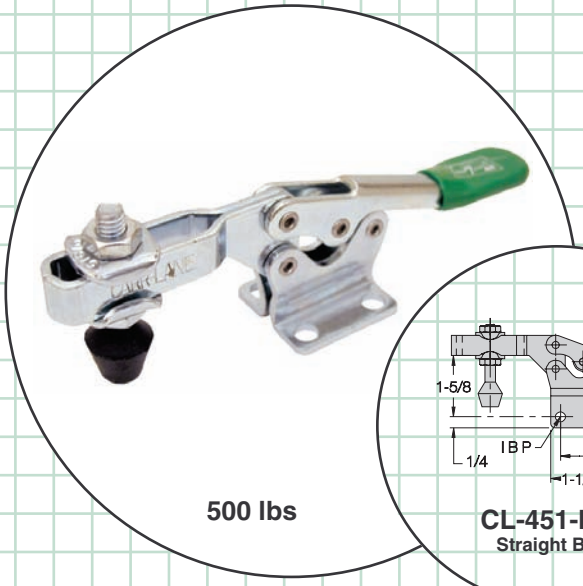

500 lbs

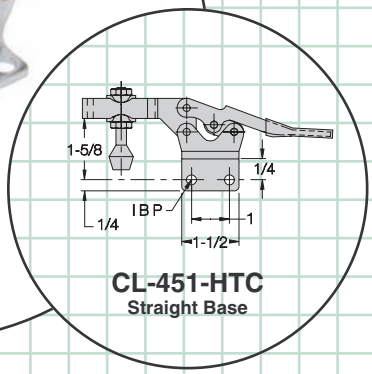

CL-451-HTC
Straight Base

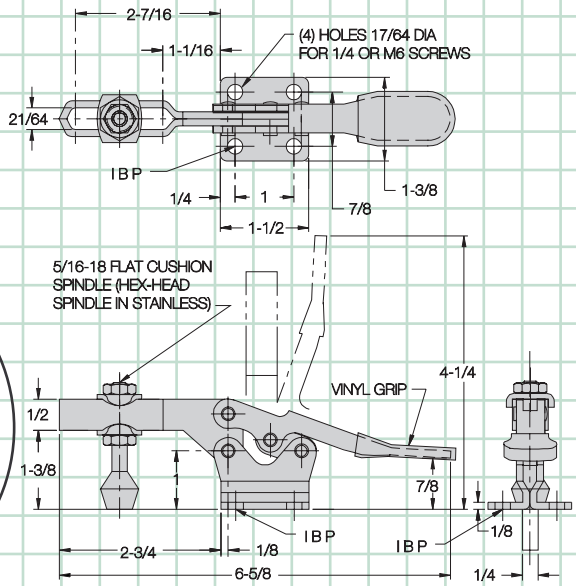

CL-450-HTC

Flanged Base

Strong-yet-compact horizontal-handle clamp, with open arm for spindle adjustment. Arm opens 90° while handle moves 65°. Supplied with 5/16-18 short flat-cushion spindle CL-518208-FC and (2) CL-51610-TW flanged washers. Shipping weight 0.6 lbs.

Holding capacity: **500 lbs**

Also available in stainless steel . . .

CL-450-HTC-S

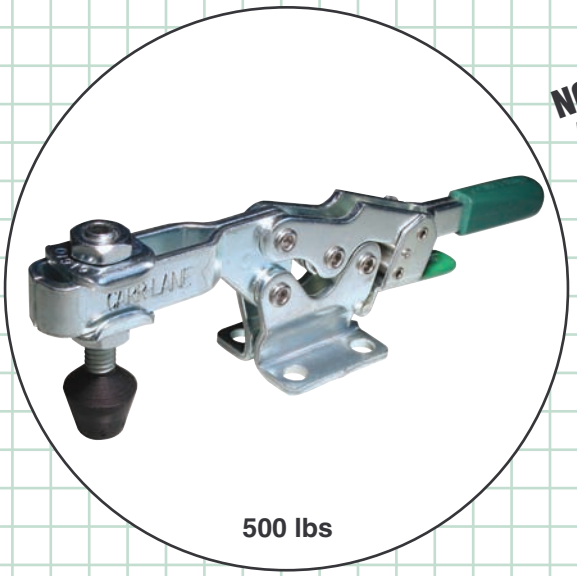

500 lbs

NOW ALSO AVAILABLE WITH SAFETY LOCK!

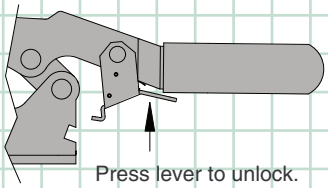

Press lever to unlock.

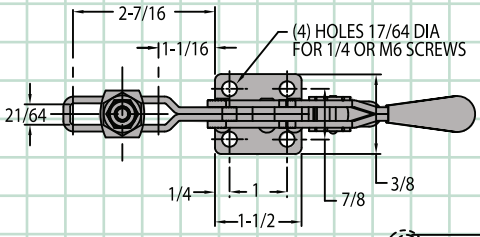

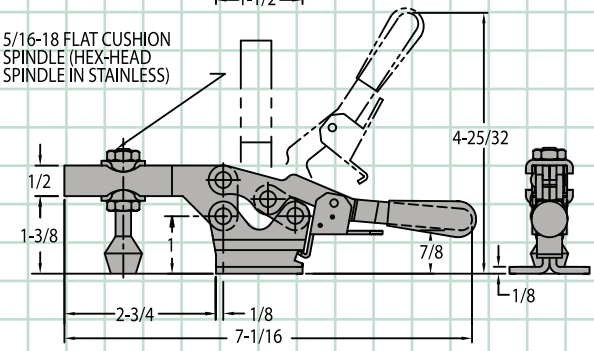

CL-450-LHTC

Flanged Base with Safety Lock

Same as the toggle clamp shown above, except with our new safety-lock feature. This safety lock automatically engages when the clamp is closed, then remains locked until manually disengaged by pressing the lever before opening. This prevents the clamp from being accidentally opened by bumping the handle. Shipping weight 0.7 lbs.

Holding capacity: **500 lbs**

Carr Lane MANUFACTURING CO.
4200 Carr Lane Ct., P.O. Box 191970
St. Louis, Missouri 63119-7970 USA
Phone: 314-647-6200, FAX: 314-647-5736
Web Site: www.carrlane.com

HORIZONTAL HANDLE

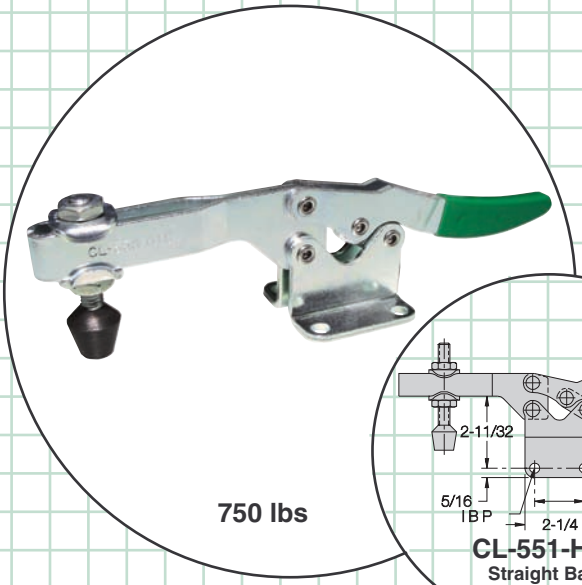

750 lbs

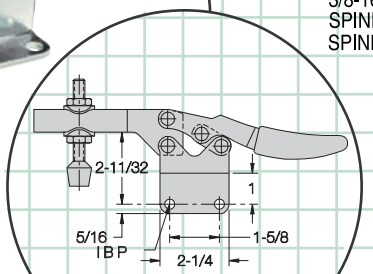

CL-551-HTC
Straight Base

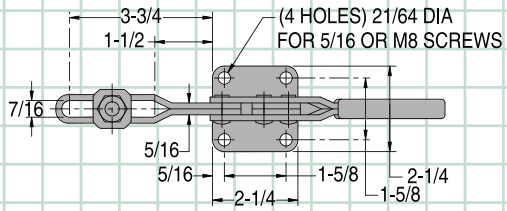

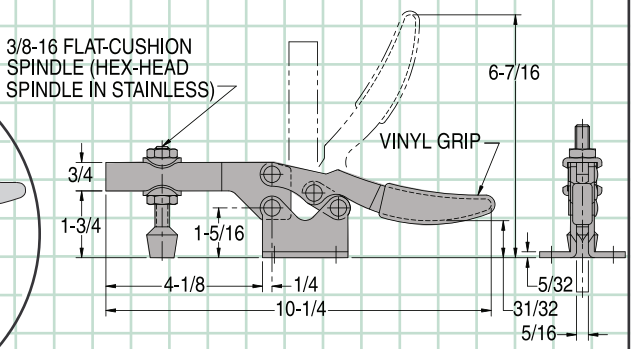

CL-550-HTC

Flanged Base

Heavy-duty clamp with open arm for spindle adjustment. Arm opens 90° while handle moves 55°. Supplied with 3/8-16 short flat-cushion spindle CL-38212-FC and (2) CL-3811-TW flanged washers. Shipping weight 1.5 lbs.

Holding capacity: **750 lbs**

Also available in stainless steel . . .

CL-550-HTC-S

CL-551-HTC-S

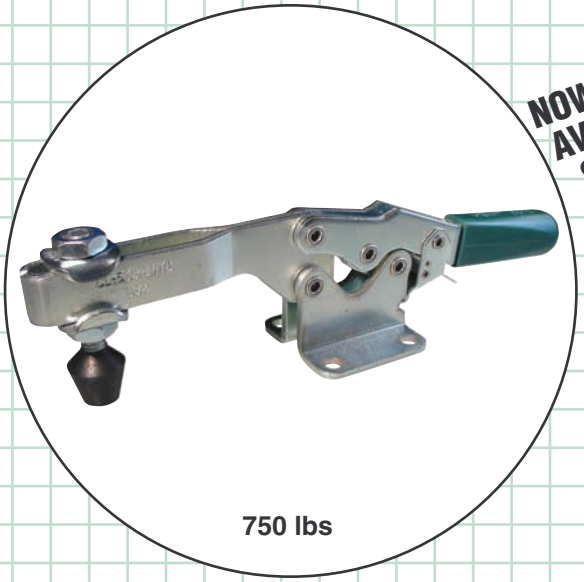

750 lbs

NOW ALSO AVAILABLE WITH SAFETY LOCK!

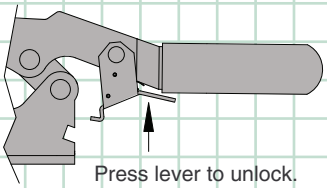

Press lever to unlock.

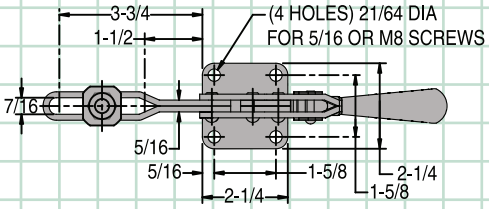

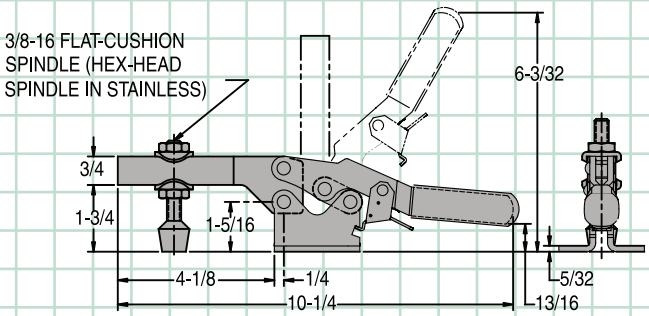

CL-550-LHTC

Flanged Base with Safety Lock

Same as the toggle clamp shown above, except with our new safety-lock feature. This safety lock automatically engages when the clamp is closed, then remains locked until manually disengaged by pressing the lever before opening. This prevents the clamp from being accidentally opened by bumping the handle. Shipping weight 1.6 lbs.

Holding capacity: **750 lbs**

MANUFACTURING CO.
4200 Carr Lane Ct., P.O. Box 191970
St. Louis, Missouri 63119-7970 USA
Phone: 314-647-6200, FAX: 314-647-5736
Web Site: www.carrlane.com

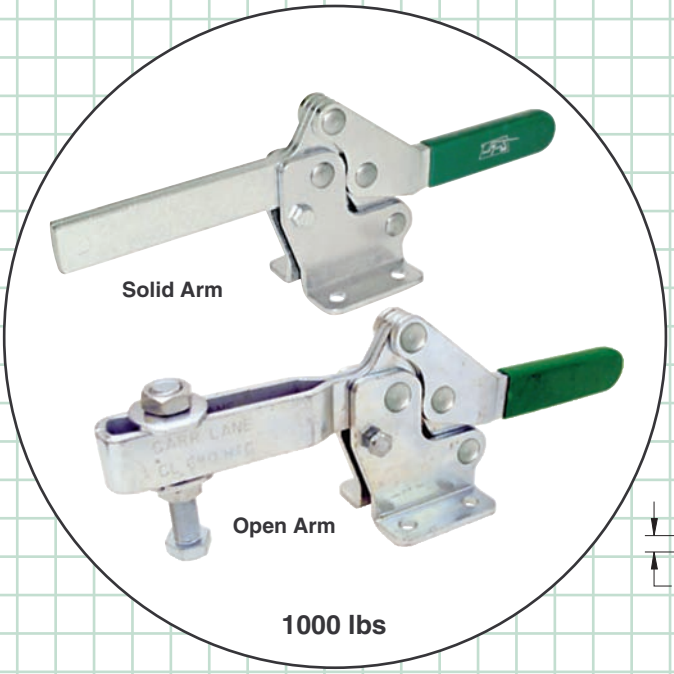

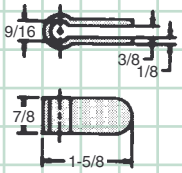

BOLT RETAINER
CL-113000-BR

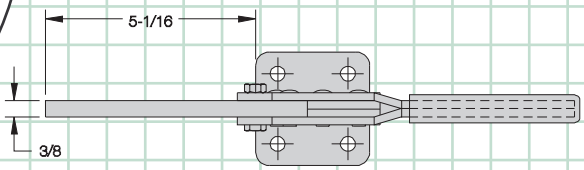

CL-600-HTC — Solid Arm
CL-650-HTC — Open Arm

Largest and strongest horizontal-handle hold-down clamp. Choose either a solid arm, or an open arm for spindle adjustment. Arm opens a wide 105˚ while handle moves 75˚. Supplied with 1/2-13 hex-head spindle CL-12314-SA. Solid-arm version supplied with a CL-113000-BR bolt retainer. Open-arm version supplied with (2) CL-1213-TW flanged washers. Shipping weight 3.3 lbs.

Holding capacity: **1000 lbs**

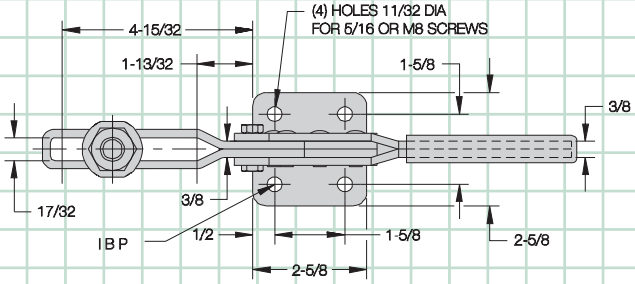

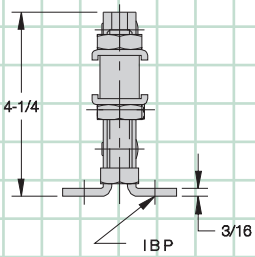

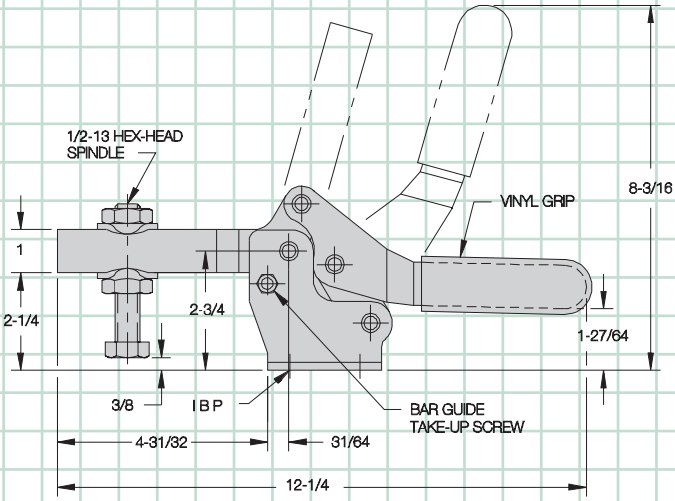

Carr Lane MANUFACTURING CO.
4200 Carr Lane Ct., P.O. Box 191970
St. Louis, Missouri 63119-7970 USA
Phone: 314-647-6200, FAX: 314-647-5736
Web Site: www.carrlane.com

HORIZONTAL HANDLE

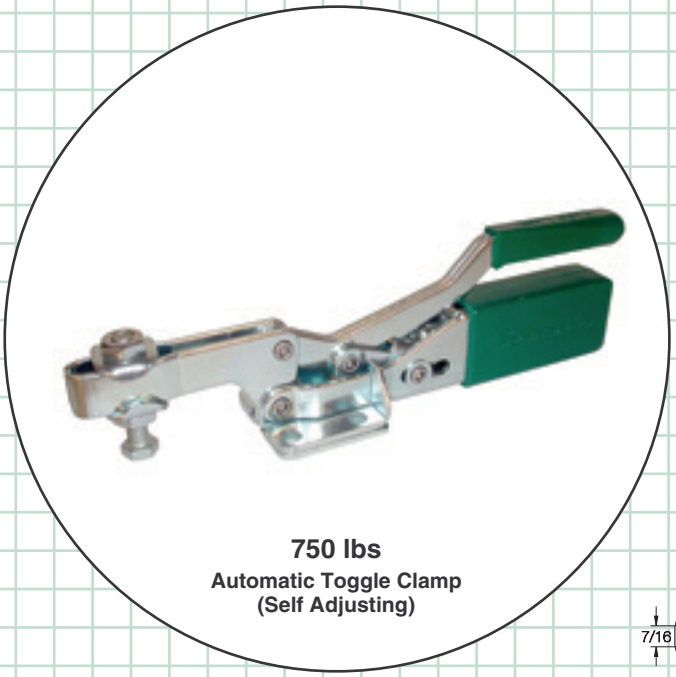

750 lbs
Automatic Toggle Clamp
(Self Adjusting)

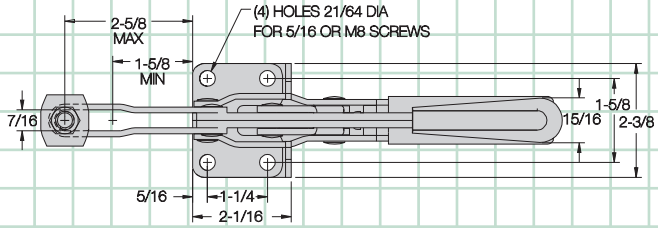

CL-550-AHTC

Automatic Toggle Clamp

Automatically adjusts for different workpiece thicknessess! Clamps with the same, repeatable force anywhere within its 1/2" automatic-adjustment range. Perfect for welding fixtures, machining fixtures for castings, fixtures holding several part sizes within the same family, or any other application where part size can vary.

Easy to use. To set up, simply adjust the contact spindle to the average workpiece height, and set desired clamping force once. After that, operate just like a standard toggle clamp. The patented adjusting mechanism does the rest.

Clamping force is always consistent. The clamp's toggle action ensures that workpieces will remain clamped even under severe vibration. No additional spindle adjustment is ever needed. The clamp even compensates for wear in long production runs.

Fits in the same space, and provides the same clamping force as a standard toggle clamp. A maximum of 250 to 500 lbs clamping force (depending on spindle position) can be applied by hand. Arm opens 87° while handle moves 80°. Supplied with 3/8-16 radius spindle CL-38200-RS and (2) CL-3811-TW flanged washers. Patent no. 4,407,493. Other patents pending. Shipping weight 1.9 lbs.

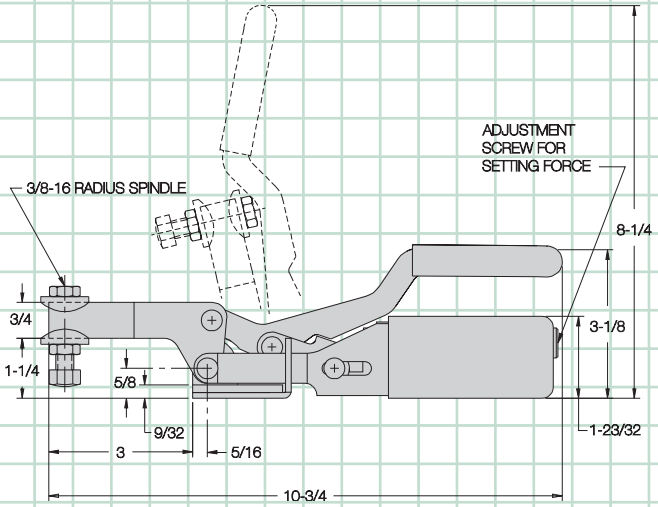

Holding capacity: **750 lbs**

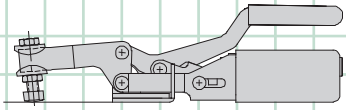

Low Limit
–1/4"

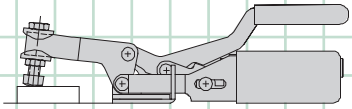

HIgh Limit
+1/4"

MANUFACTURING CO.
4200 Carr Lane Ct., P.O. Box 191970
St. Louis, Missouri 63119-7970 USA
Phone: 314-647-6200, FAX: 314-647-5736
Web Site: www.carrlane.com

(Rev. 8/98)

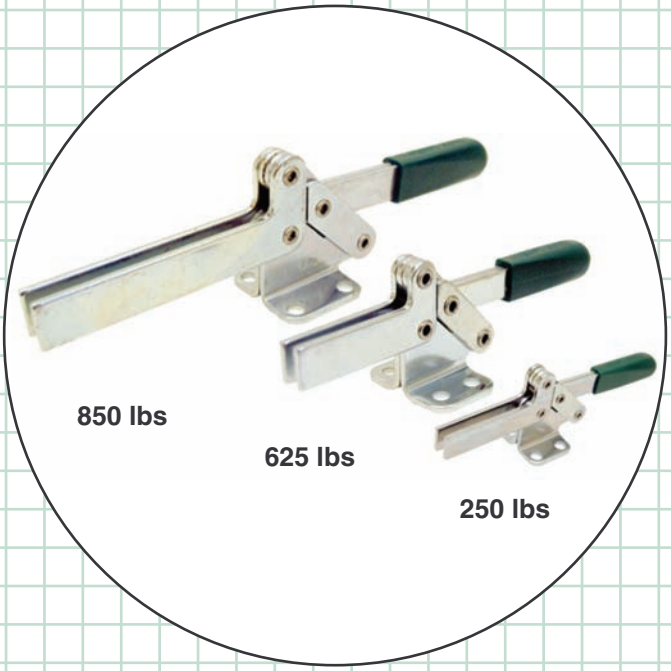

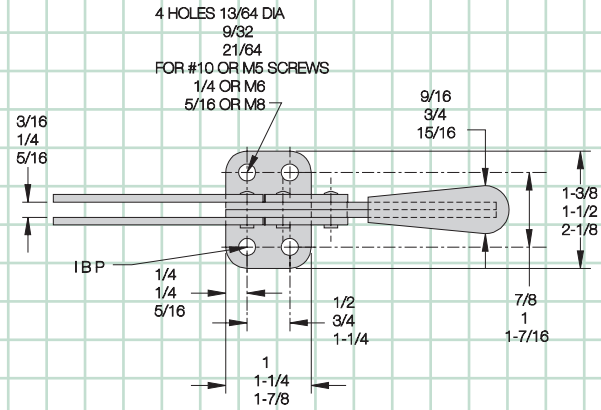

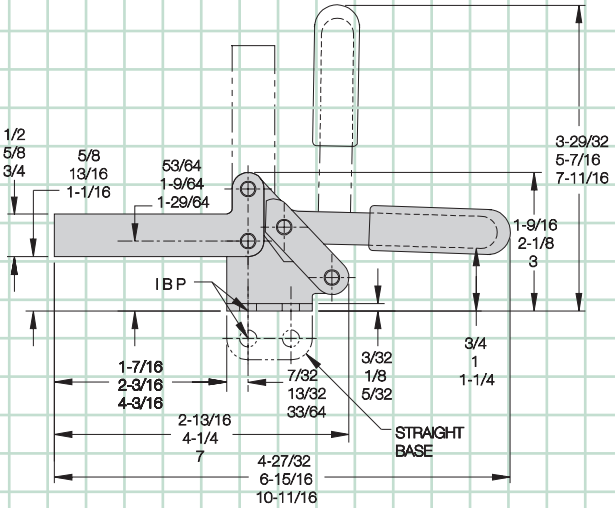

Classic-design horizontal-handle clamps with open arm for spindle adjustment. Arm opens 90° while handle moves 90°. Available in three sizes.

CL-151-TC

Flanged Base

Smallest-size clamp. Accepts any #10-32 spindle and (2) CL-3166-TW flanged washers. For fixed spindle location, use a 1/4-20 spindle and a CL-1458-S bolt retainer. See pages 78-82 to order. Shipping weight 0.4 lbs.

Holding capacity: 250 lbs

CL-251-TC

Flanged Base

Medium-size clamp. Accepts any 1/4-20 spindle and (2) CL-148-TW flanged washers. For fixed spindle location, use a CL-1458-S bolt retainer. See pages 78-82 to order. Shipping weight 0.5 lbs.

Holding capacity: 625 lbs

CL-351-TC

Flanged Base

Largest-size clamp. Accepts any 5/16-18 spindle and (2) CL-51610-TW flanged washers. For fixed spindle location, use a CL-51658-S bolt retainer. See pages 78-82 to order. Shipping weight 1.4 lbs.

Holding capacity: 850 lbs

CL-151-TC (Top dimension)
CL-251-TC (Middle dimension)
CL-351-TC (Bottom dimension)

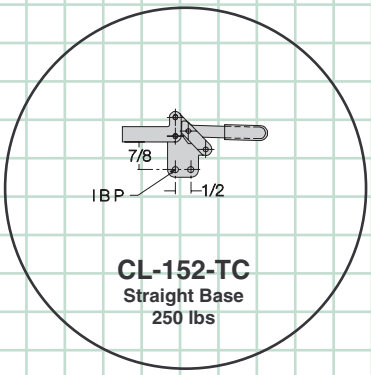

CL-152-TC
Straight Base
250 lbs

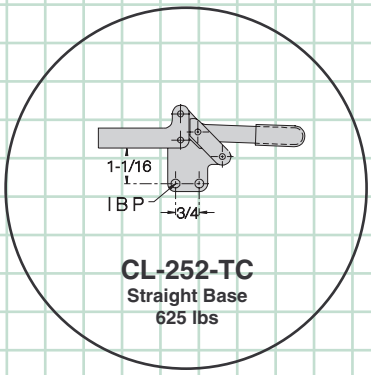

CL-252-TC
Straight Base
625 lbs

MANUFACTURING CO.
4200 Carr Lane Ct., P.O. Box 191970
St. Louis, Missouri 63119-7970 USA
Phone: 314-647-6200, FAX: 314-647-5736
Web Site: www.carrlane.com

HORIZONTAL HANDLE

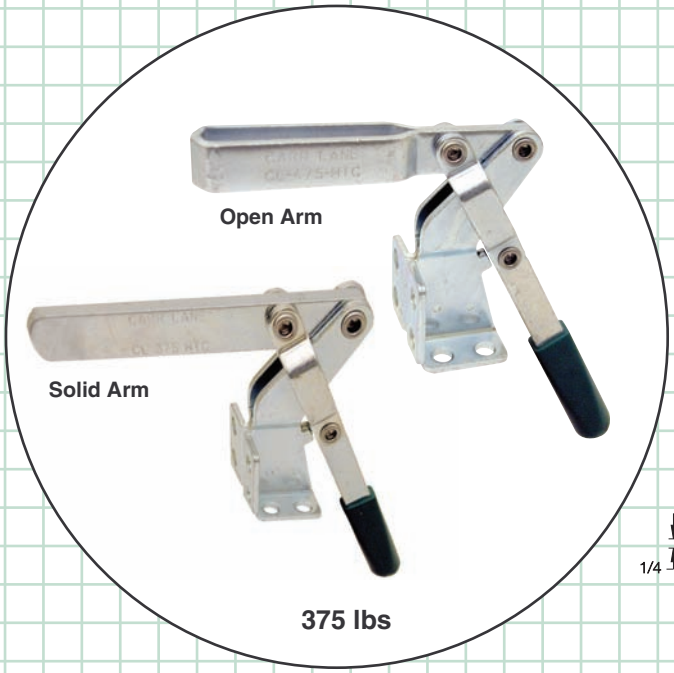

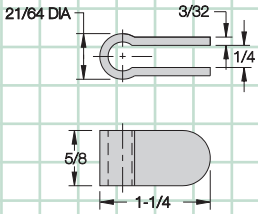

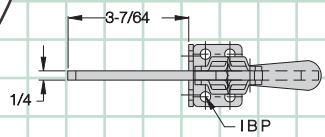

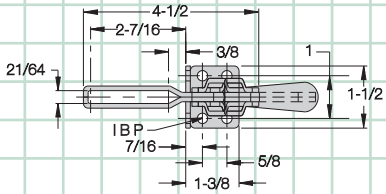

CL-375-HTC — Solid Arm
CL-475-HTC — Open Arm

Extra-wide-opening clamp with handle that locks at a downward angle. Unique up-then-down handle motion opens arm a full 185°. Dual flanged bases allow mounting on either horizontal or vertical surfaces. Available with a solid arm, or an open arm for spindle adjustment. Accepts all 5/16-18 spindles . . . see pages 78-81 to order. Solid-arm version supplied with a CL-518000-BR bolt retainer. Open-arm version supplied with (2) CL-51610-TW flanged washers. Shipping weight 0.8 lbs.

Holding capacity: **375 lbs**

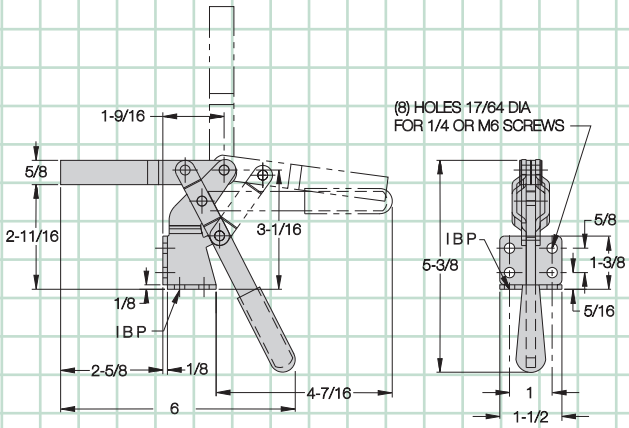

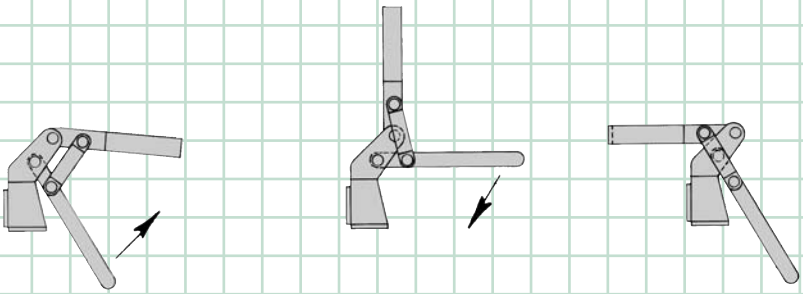

Unique up-then-down handle action

MANUFACTURING CO.
4200 Carr Lane Ct., P.O. Box 191970
St. Louis, Missouri 63119-7970 USA
Phone: 314-647-6200, FAX: 314-647-5736
Web Site: www.carrlane.com

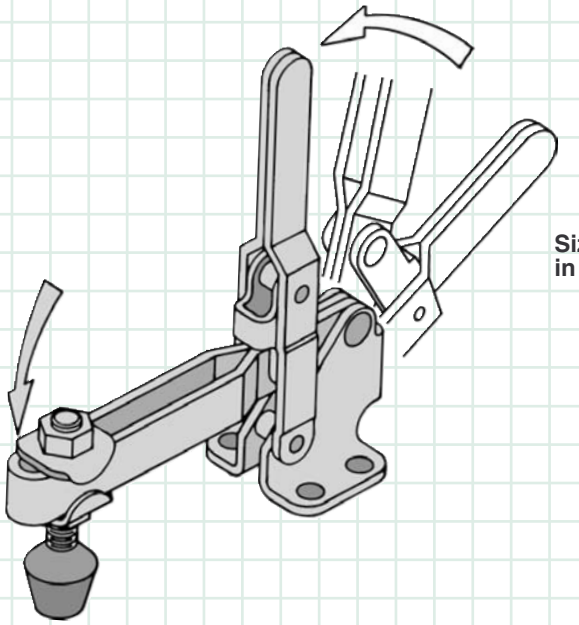

Sizes marked * are also available in stainless steel

All Carr Lane toggle clamps are DFARS and RoHS compliant.

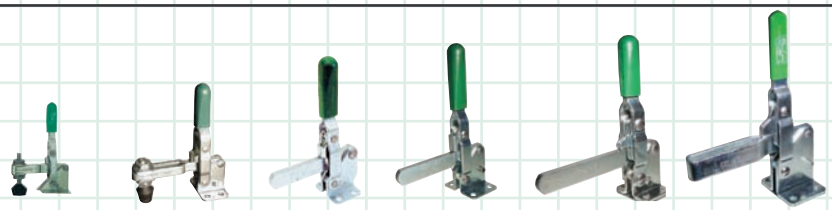

100 lbs* 200 lbs* 500 lbs* 750 lbs* 1000 lbs 1200 lbs

Wide Opening
pp. 15-24

Clamping arm opens past 90° for excellent loading clearance. Most-popular and widest-range series of vertical-handle hold-down clamps. Choice of flanged or straight base, solid or open arm, and regular or T handle in most of the seven available sizes.

750 lbs 1000 lbs

Wide Opening – Angle Arm
p. 25

Clamps with arm tilted upward for increased clearance underneath. Also useful for applying clamping force at an angle. Wide-opening solid arm. Choice of flanged base or straight base. Available in two sizes.

750 lbs

Wide Opening Automatically Adjusting
p. 27

Self-adjusting clamp automatically compensates for different workpiece heights without resetting the spindle. Clamping force is always consistent. Wide opening.

750 lbs 2000 lbs 3000 lbs 6000 lbs

Wide Opening – Heavy-Duty
pp. 28-31

Heavy-duty production clamps designed for extreme durability. Available either as complete clamps or as basic mechanisms for adding custom clamping arms or handles. Choice of four sizes.

CONTINUED ON NEXT PAGE

Carr Lane MANUFACTURING CO.
4200 Carr Lane Ct., P.O. Box 191970
St. Louis, Missouri 63119-7970 USA
Phone: 314-647-6200, FAX: 314-647-5736
Web Site: www.carrlane.com

VERTICAL HANDLE

CONTINUED FROM PREVIOUS PAGE

150 lbs*

350 lbs*

750 lbs*

Low Profile
pp. 32-33
Extremely compact low-profile clamps with a unique finger-grip T handle. Available in three sizes.

100 lbs*

250 lbs

625 lbs

850 lbs

1500 lbs

2500 lbs

5000 lbs

Low Arm
pp. 34-35, 38
Simple, easy-opening clamps with excellent arm reach. Extends farther over workpiece than any clamp its size. Choice of flanged or straight base, and solid or open arm. Arm opens 83°. Available in six sizes, the largest two forged.

100 lbs*

250 lb

625 lbs

850 lbs

1500 lbs

2500 lbs

5000 lbs

High Arm
pp. 36-37, 39
Simple, easy-opening clamps with extra arm height. Choice of flanged or straight base, and solid or open arm. Arm opens 83°. Available in six sizes, the largest two forged.

1000 lbs

Vertical Handle Cam Clamps
p. 26
Wide-opening clamp that locks by spiral-cam action rather than toggle action. Solid arm, flanged base.

Carr Lane®
MANUFACTURING CO.
4200 Carr Lane Ct., P.O. Box 191970
St. Louis, Missouri 63119-7970 USA
Phone: 314-647-6200, FAX: 314-647-5736
Web Site: www.carrlane.com

(Rev. 11/09)

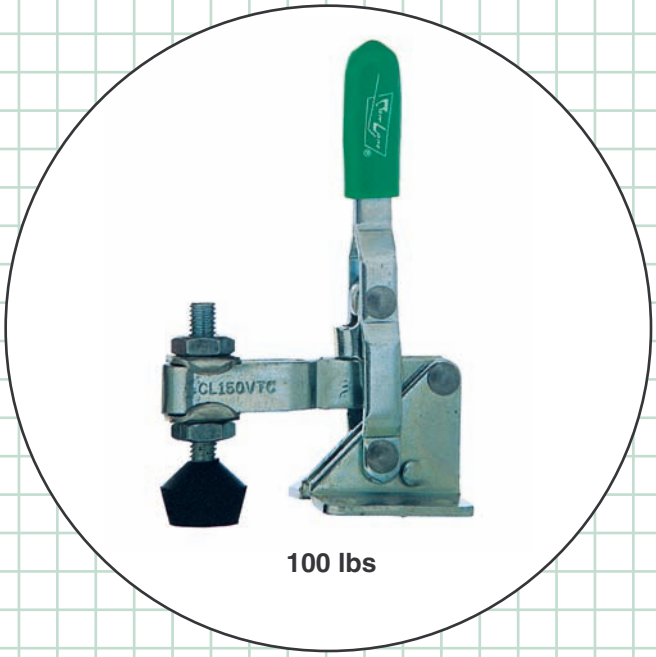

100 lbs

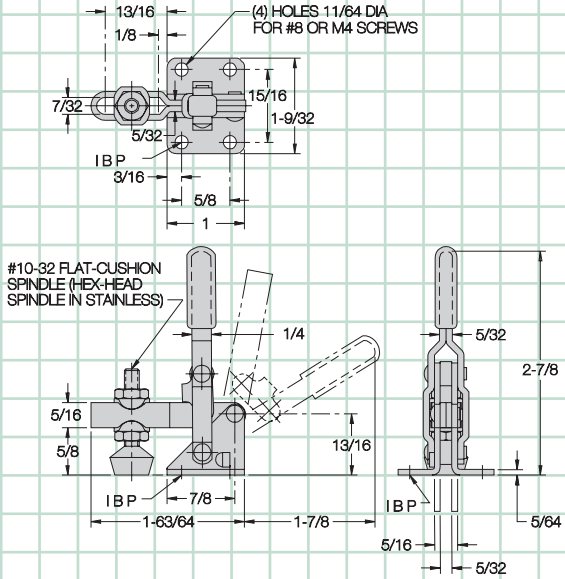

CL-150-VTC

Flanged Base

Smallest wide-opening hold-down clamp available. Open arm provides adjustable spindle location. Arm opens 100° while handle moves 56°. Supplied with #10-32 flat-cushion spindle CL-316112-FC and (2) CL-3166-TW flanged washers. Shipping weight 0.2 lbs.

Holding capacity: **100 lbs**

Also available in stainless steel...

CL-150-VTC-S

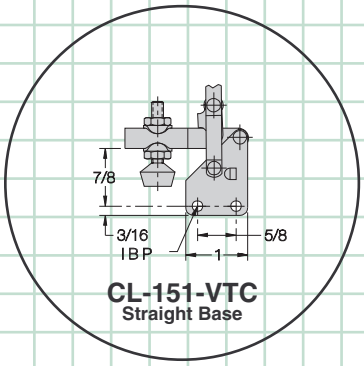

CL-151-VTC
Straight Base

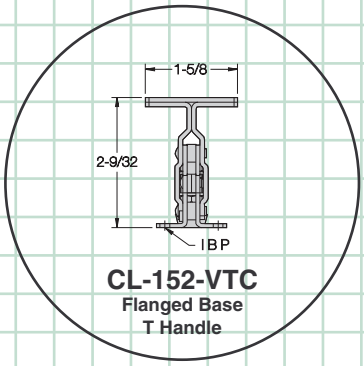

CL-152-VTC
Flanged Base
T Handle

Also available air powered...

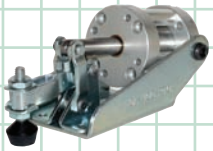

CL-400-PTC
(page 70)

Carr Lane®
MANUFACTURING CO.
4200 Carr Lane Ct., P.O. Box 191970
St. Louis, Missouri 63119-7970 USA
Phone: 314-647-6200, FAX: 314-647-5736
Web Site: www.carrlane.com

VERTICAL HANDLE

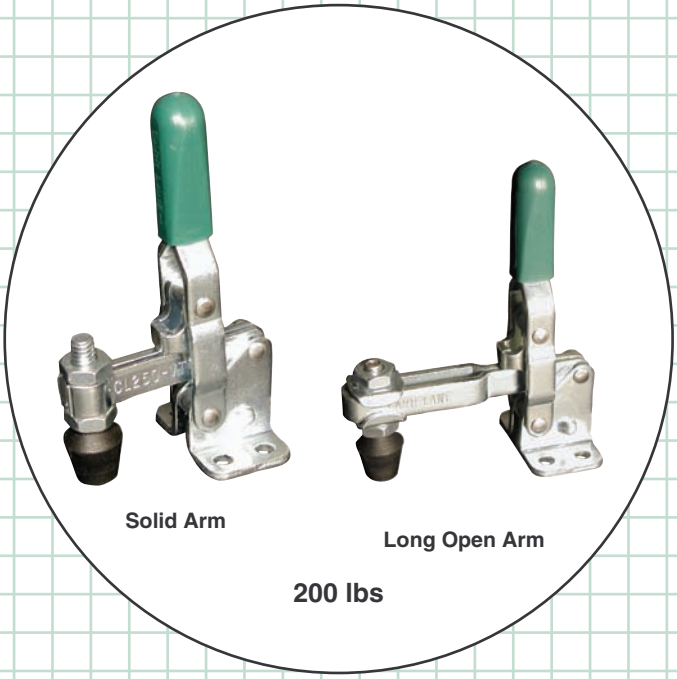

Solid Arm

Long Open Arm

200 lbs

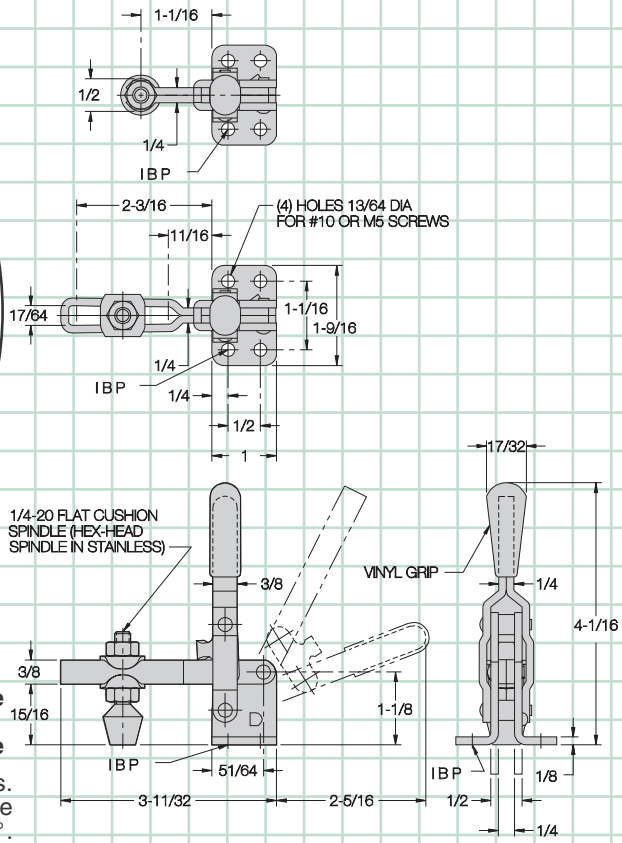

CL-250-VTC Solid Arm, Flanged Base
CL-253-VTC Long Open Arm, Flanged Base

Small-yet-powerful clamp available in several configurations. Choose either a solid arm, or a long open arm for spindle adjustment. Arm opens 117° while handle moves 69°. Supplied with 1/4-20 short flat-cushion spindle CL-14112-FC. Open-arm version supplied with (2) CL-148-TW flanged washers. Shipping weight 0.4 lbs.

Holding capacity: **200 lbs**

Also available in stainless steel . . .

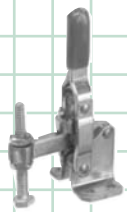

CL-250-VTC-S

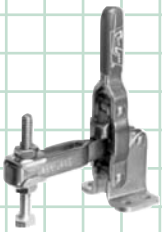

CL-253-VTC-S

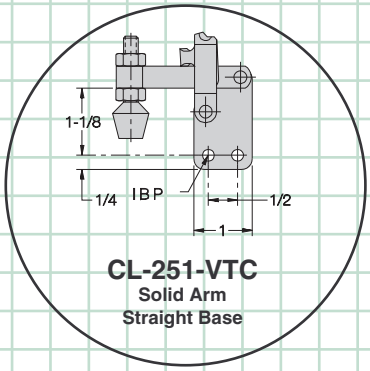

CL-251-VTC
Solid Arm
Straight Base

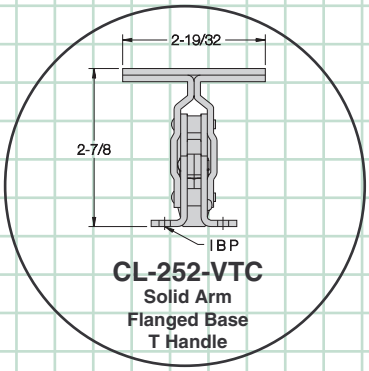

CL-252-VTC
Solid Arm
Flanged Base
T Handle

Also available air powered . . .

CL-500-PTC
(page 71)

MANUFACTURING CO.
4200 Carr Lane Ct., P.O. Box 191970
St. Louis, Missouri 63119-7970 USA
Phone: 314-647-6200, FAX: 314-647-5736
Web Site: www.carrlane.com

(Rev. 11/09)

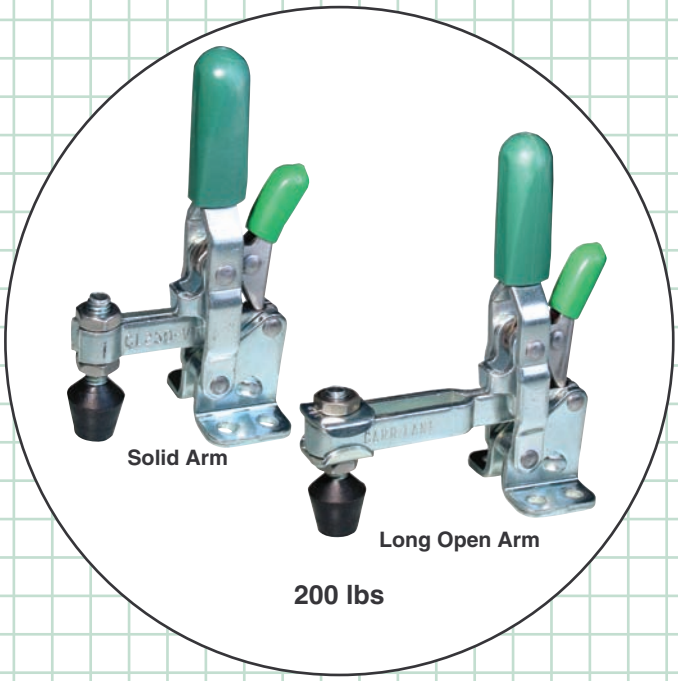

NOW ALSO AVAILABLE WITH SAFETY LOCK!

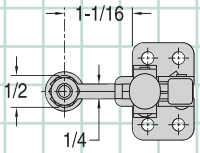

CL-250-LVTC Solid Arm, Flanged Base

CL-253-LVTC Long Open Arm, Flanged Base

Same as the wide-opening toggle clamps shown on opposite page 16, except with our new safety-lock feature. This safety lock automatically engages when the clamp is closed, then remains locked until manually disengaged by pressing the handle. This prevents the clamp from being accidentally opened by bumping the handle.

Choose either a solid arm, or a long open arm for spindle adjustment. Arm opens 117° while handle moves 69°. Supplied with 1/4-20 short flat-cushion spindle CL-14112-FC. Open-arm version supplied with (2) CL-148-TW flanged washers. Shipping weight 0.4 lbs.

Holding capacity: **200 lbs**

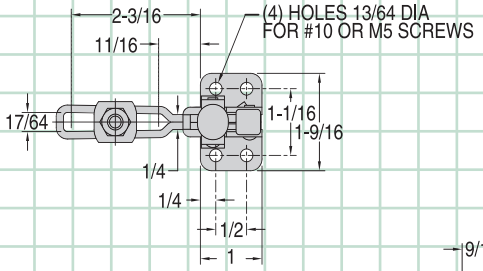

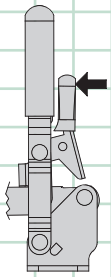

Press Lever To Unlock

Also available in stainless steel . . .

NEW!

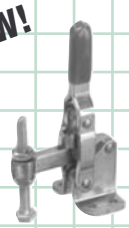

CL-250-LVTC-S

NEW!

CL-253-LVTC-S

Carr Lane MANUFACTURING CO.
4200 Carr Lane Ct., P.O. Box 191970
St. Louis, Missouri 63119-7970 USA
Phone: 314-647-6200, FAX: 314-647-5736
Web Site: www.carrlane.com

VERTICAL HANDLE

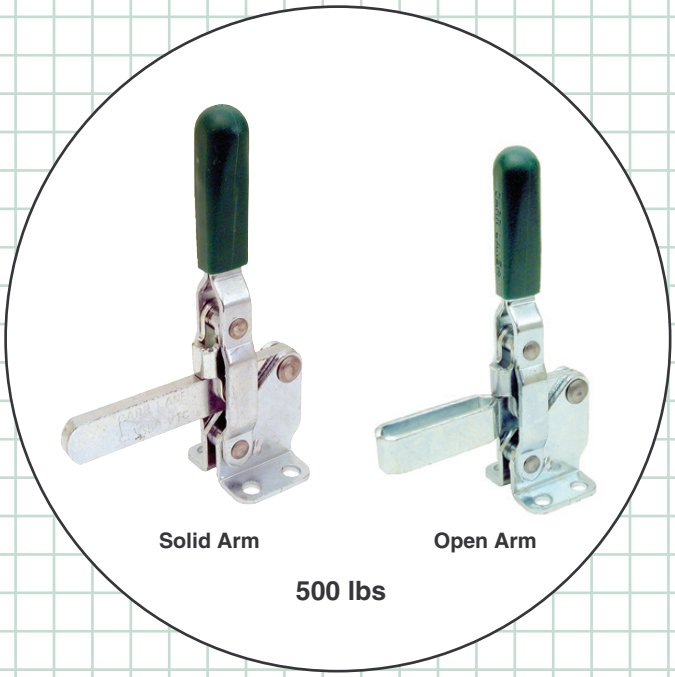

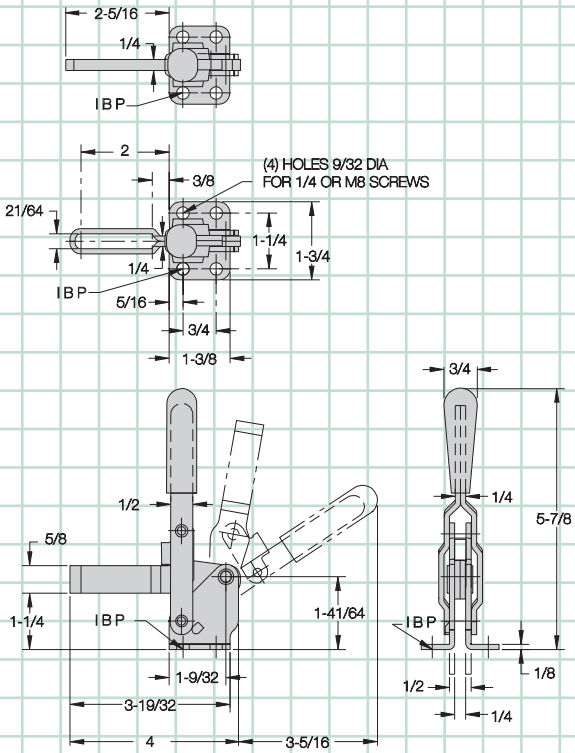

CL-350-VTC — Solid Arm, Flanged Base
CL-450-VTC — Open Arm, Flanged Base

Most-popular wide-opening clamp available in many configurations. Choose either a solid arm, or an open arm for spindle adjustment (extra-long arms also available). Arm opens 100° while handle moves 60°. Accepts any 5/16-18 short spindle . . . see pages 78-81 to order. Solid-arm versions supplied with a CL-518000-BR bolt retainer. Open-arm versions supplied with (2) CL-51610-TW flanged washers. Shipping weight 0.8 lbs.

Holding capacity: **500 lbs**

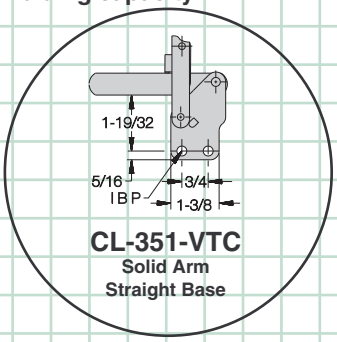

CL-351-VTC
Solid Arm
Straight Base

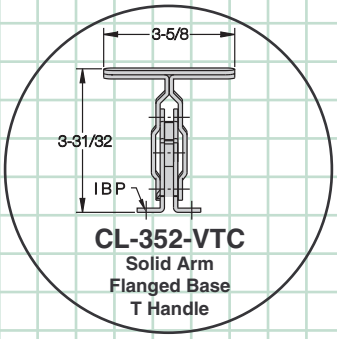

CL-352-VTC
Solid Arm
Flanged Base
T Handle

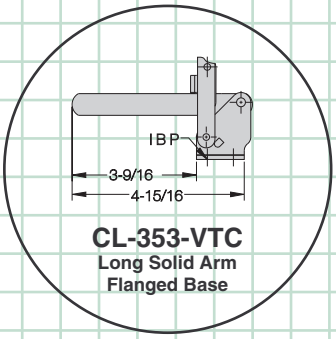

CL-353-VTC
Long Solid Arm
Flanged Base

Also available in stainless steel . . .

CL-450-VTC-S

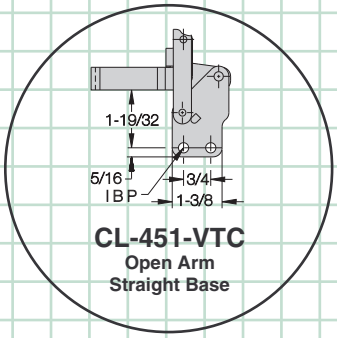

CL-451-VTC
Open Arm
Straight Base

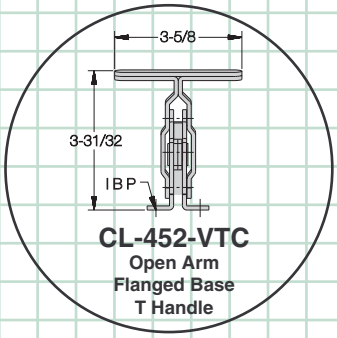

CL-452-VTC
Open Arm
Flanged Base
T Handle

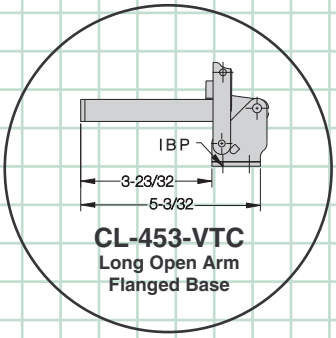

CL-453-VTC
Long Open Arm
Flanged Base

Also available air powered . . .

CL-1001-PTC
Solid Arm
(page 72)

CL-1000-PTC
Open Arm
(page 72)

MANUFACTURING CO.
4200 Carr Lane Ct., P.O. Box 191970
St. Louis, Missouri 63119-7970 USA
Phone: 314-647-6200, FAX: 314-647-5736
Web Site: www.carrlane.com

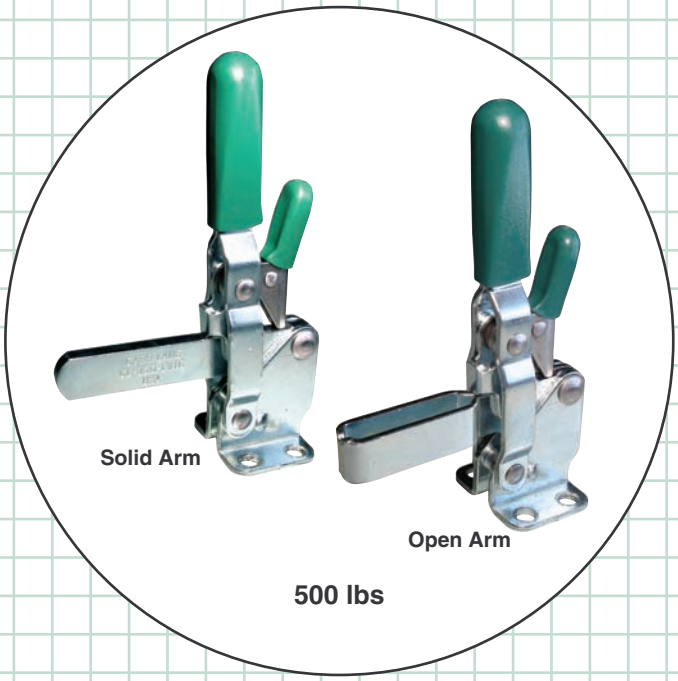

NOW ALSO AVAILABLE WITH SAFETY LOCK!

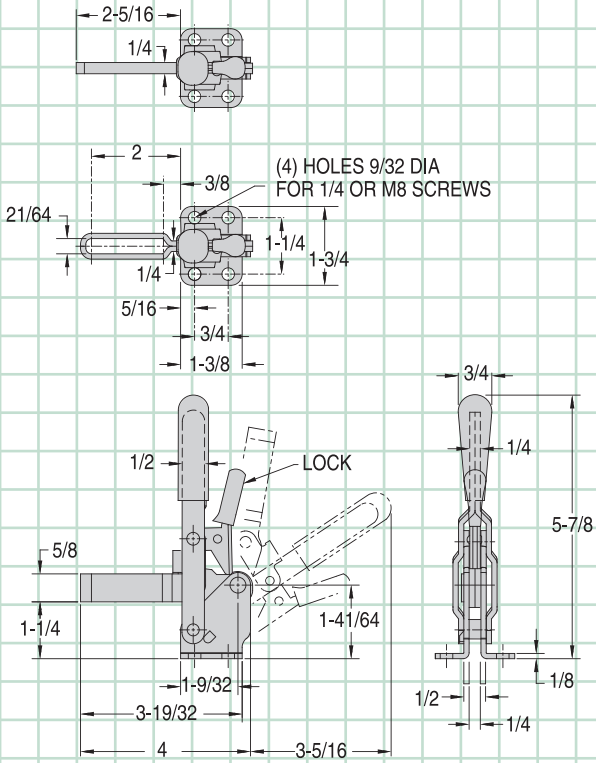

CL-350-LVTC — Solid Arm, Flanged Base

CL-450-LVTC — Open Arm, Flanged Base

Same as the wide-opening toggle clamps shown on opposite page 18, except with our new safety-lock feature. This safety lock automatically engages when the clamp is closed, then remains locked until manually disengaged by pressing the handle. This prevents the clamp from being accidentally opened by bumping the handle.

Choose either a solid arm, or an open arm for spindle adjustment. Arm opens 100° while handle moves 60°. Accepts any 5/16-18 short spindle . . . see pages 78-81 to order. Solid-arm version supplied with CL-518000-BR bolt retainer. Open-arm version supplied with (2) CL-51610-TW flanged washers. Shipping weight 0.9 lbs.

Holding capacity: **500 lbs**

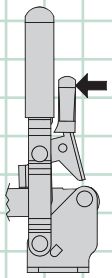

Press Lever To Unlock

NEW!

Also available in stainless steel . . .

CL-450-LVTC-S

Carr Lane MANUFACTURING CO.
4200 Carr Lane Ct., P.O. Box 191970
St. Louis, Missouri 63119-7970 USA
Phone: 314-647-6200, FAX: 314-647-5736
Web Site: www.carrlane.com

VERTICAL HANDLE

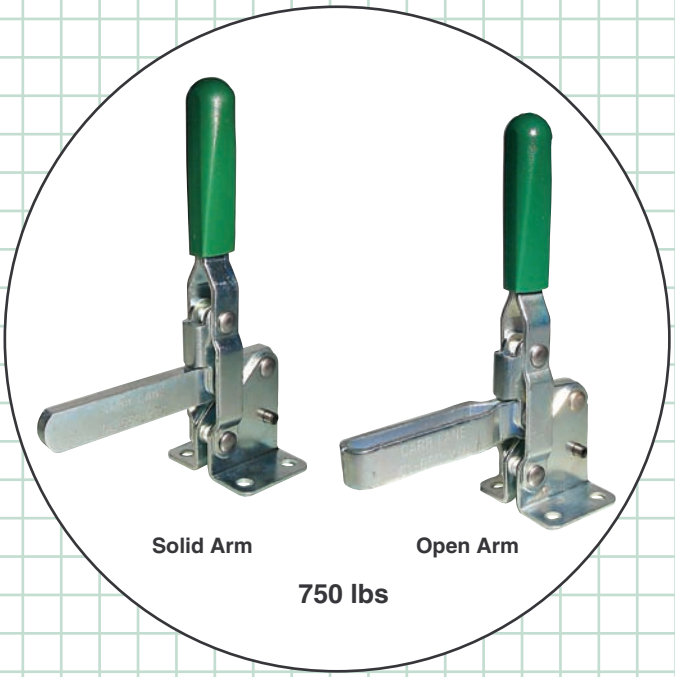

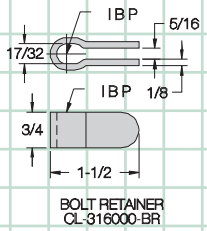

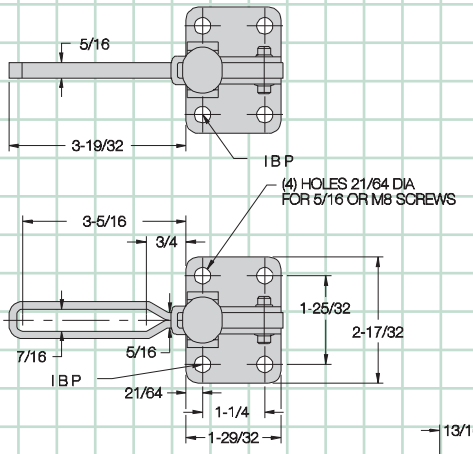

CL-550-VTC — Solid Arm, Flanged Base
CL-650-VTC — Open Arm, Flanged Base

Larger wide-opening clamp available in several configurations. Choose either a solid arm, or an open arm for spindle adjustment. Arm opens 106° while handle moves 58°. Accepts any 3/8-16 spindle . . . see pages 78-81 to order. Solid-arm version supplied with a CL-316000-BR bolt retainer. Open-arm version supplied with (2) CL-3811-TW flanged washers. Shipping weight 1.3 lbs.

Holding capacity: **750 lbs**

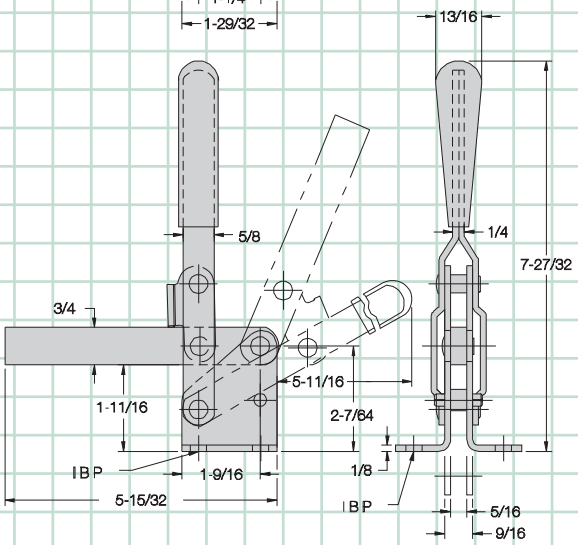

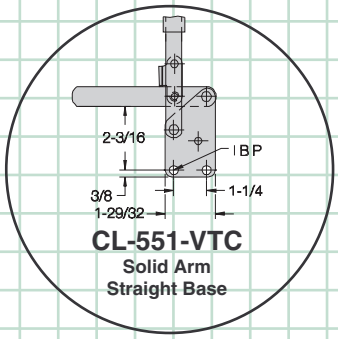

CL-551-VTC
Solid Arm
Straight Base

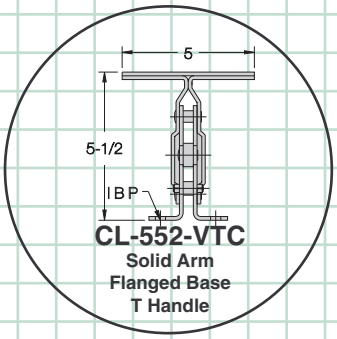

CL-552-VTC
Solid Arm
Flanged Base
T Handle

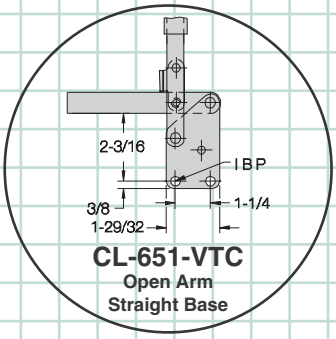

CL-651-VTC
Open Arm
Straight Base

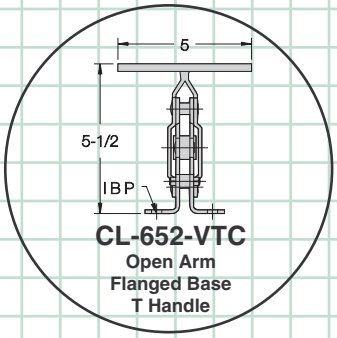

CL-652-VTC
Open Arm
Flanged Base
T Handle

Also available with patented automatic adjustment!

CL-650-ATC
(page 27)

Also available in stainless steel . . .

CL-650-VTC-S

MANUFACTURING CO.
4200 Carr Lane Ct., P.O. Box 191970
St. Louis, Missouri 63119-7970 USA
Phone: 314-647-6200, FAX: 314-647-5736
Web Site: www.carrlane.com

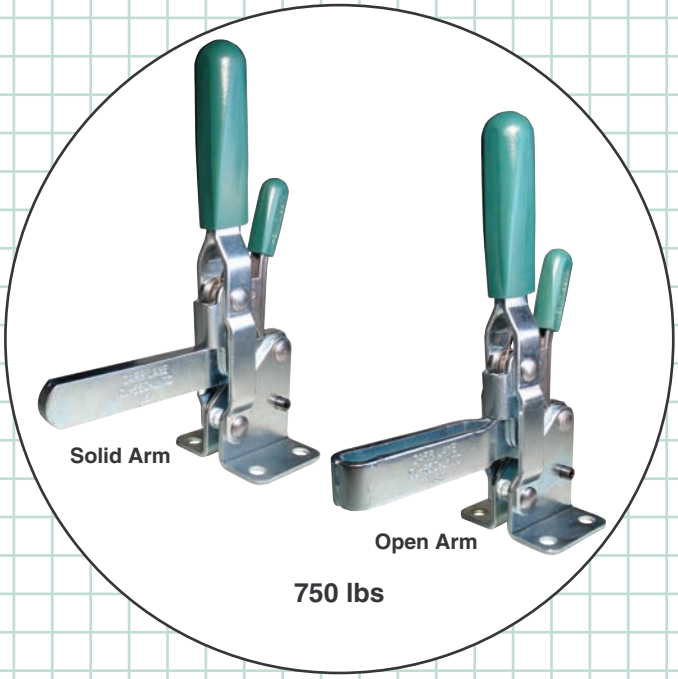

NOW ALSO AVAILABLE WITH SAFETY LOCK!

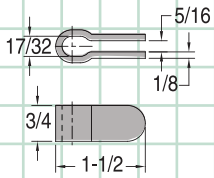

BOLT RETAINER
CL-316000-BR

CL-550-LVTC — Solid Arm, Flanged Base

CL-650-LVTC — Open Arm, Flanged Base

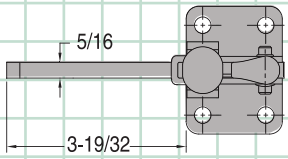

Same as the wide-opening toggle clamps shown on opposite page 20, except with our new safety-lock feature. This safety lock automatically engages when the clamp is closed, then remains locked until manually disengaged by pressing the handle. This prevents the clamp from being accidentally opened by bumping the handle.

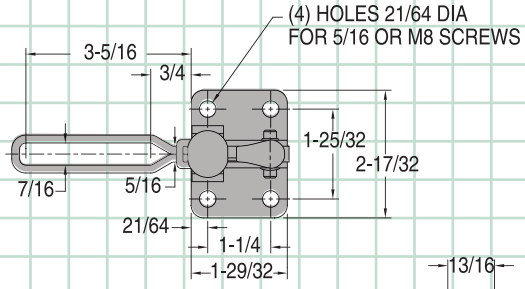

Choose either a solid arm, or an open arm for spindle adjustment. Arm opens 106° while handle moves 58°. Accepts any 3/8-16 spindle . . . see pages 78-81 to order. Solid-arm version supplied with CL-316000-BR bolt retainer. Open-arm version supplied with (2) CL-3811-TW flanged washers. Shipping weight 1.4 lbs.

Holding capacity: **750 lbs**

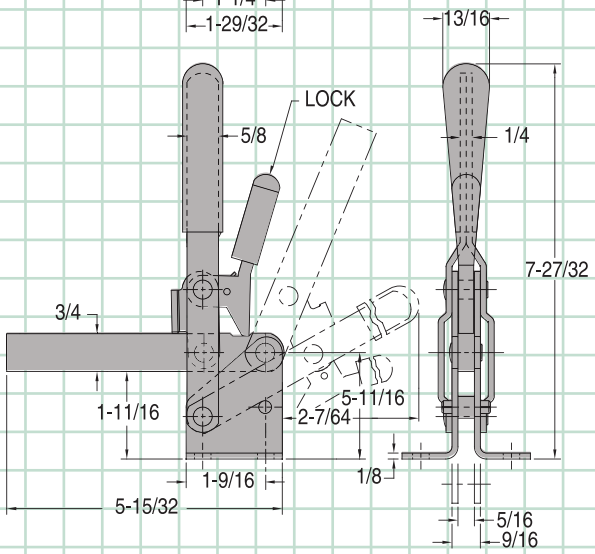

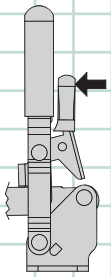

Press Lever To Unlock

Carr Lane MANUFACTURING CO.
4200 Carr Lane Ct., P.O. Box 191970
St. Louis, Missouri 63119-7970 USA
Phone: 314-647-6200, FAX: 314-647-5736
Web Site: www.carrlane.com

VERTICAL HANDLE

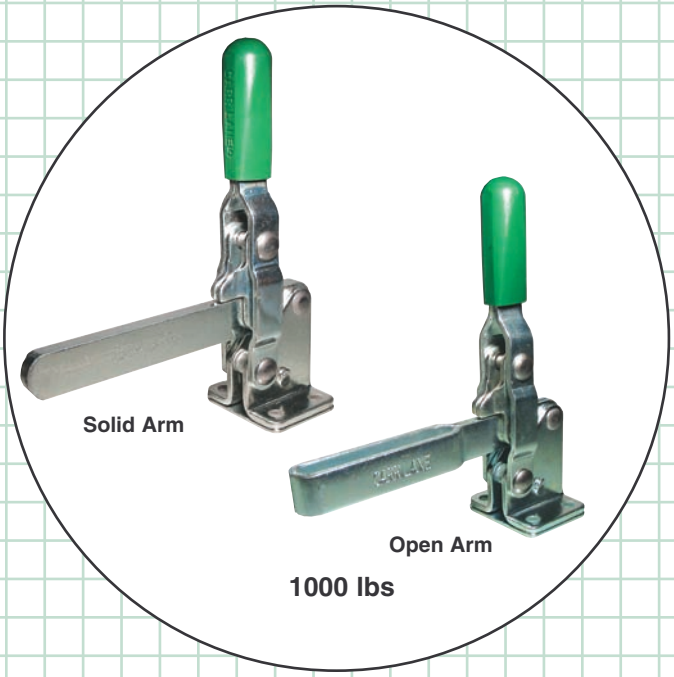

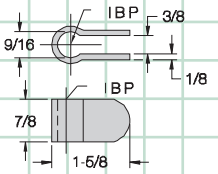

BOLT RETAINER
CL-113000-BR

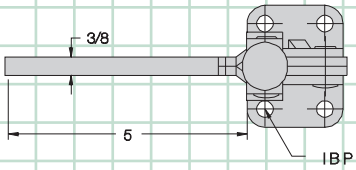

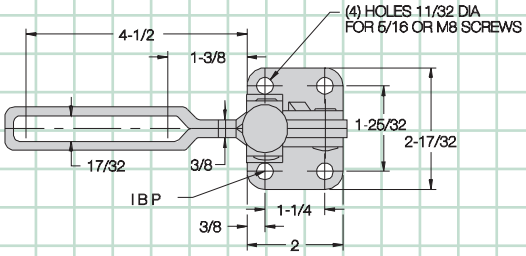

CL-750-VTC — Solid Arm, Flanged Base
CL-850-VTC — Open Arm, Flanged Base

Extra-large wide-opening clamp. Choose either a solid arm, or an open arm for spindle adjustment. Arm opens 120˚ while handle moves 67˚. Accepts any 1/2-13 spindle . . . see pages 78-81 to order. Solid-arm version supplied with a CL-113000-BR bolt retainer. Open-arm version supplied with (2) CL-1213-TW flanged washers. Shipping weight 2.5 lbs.

Holding capacity: **1000 lbs**

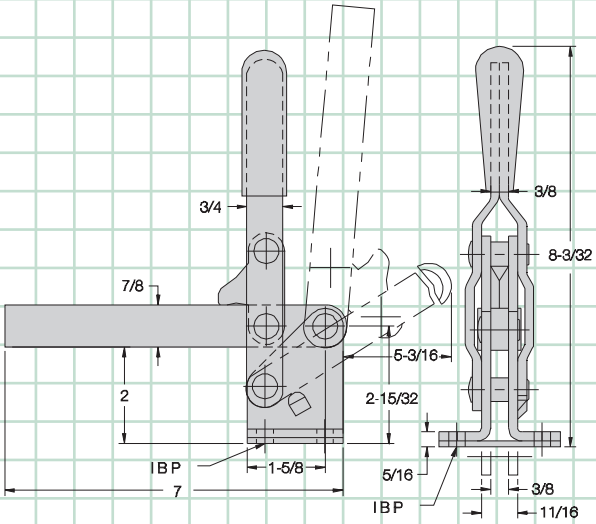

Also available air powered . . .

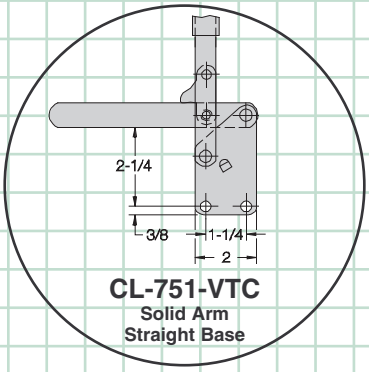

CL-751-VTC
Solid Arm
Straight Base

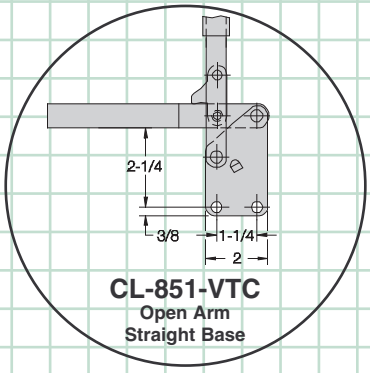

CL-851-VTC
Open Arm
Straight Base

CL-2001-PTC
Solid Arm
(page 73)

CL-2000-PTC
Open Arm
(page 73)

MANUFACTURING CO.
4200 Carr Lane Ct., P.O. Box 191970
St. Louis, Missouri 63119-7970 USA
Phone: 314-647-6200, FAX: 314-647-5736
Web Site: www.carrlane.com

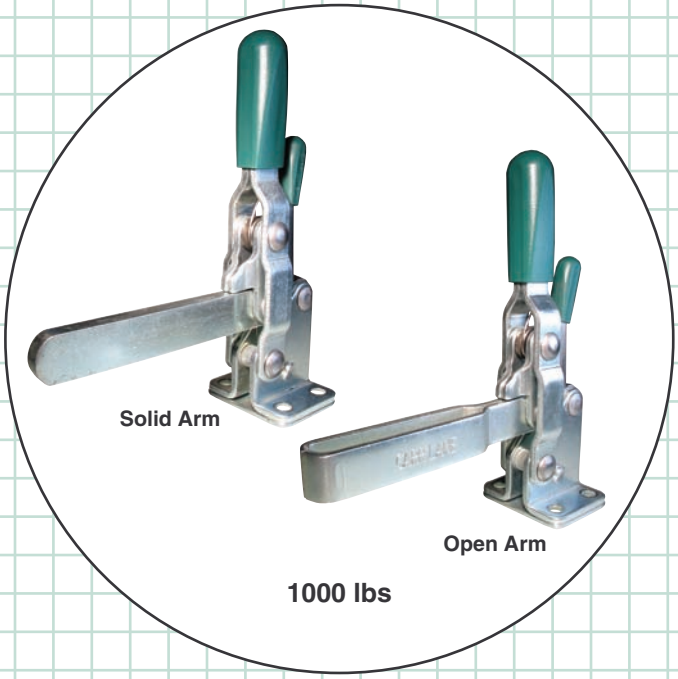

NOW ALSO AVAILABLE WITH SAFETY LOCK!

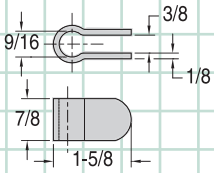

CL-113000-BR

CL-750-LVTC — Solid Arm, Flanged Base

CL-850-LVTC — Open Arm, Flanged Base

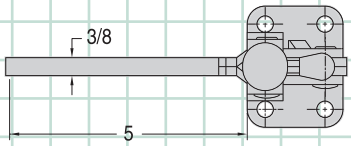

Same as the wide-opening toggle clamps shown on opposite page 22, except with our new safety-lock feature. This safety lock automatically engages when the clamp is closed, then remains locked until manually disengaged by pressing the handle. This prevents the clamp from being accidentally opened by bumping the handle.

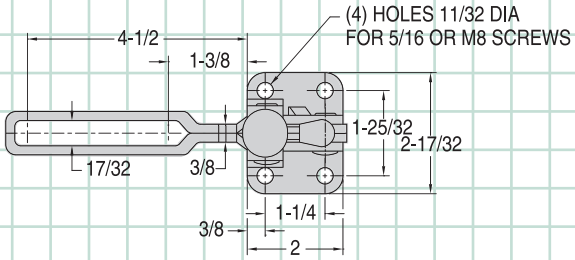

Choose either a solid arm, or an open arm for spindle adjustment. Arm opens 120° while handle moves 67°. Accepts any 1/2-13 spindle . . . see pages 78-81 to order. Solid-arm version supplied with CL-113000-BR bolt retainer. Open-arm version supplied with (2) CL-1213-TW flanged washers. Shipping weight 2.5 lbs.

Holding capacity: **1000 lbs**

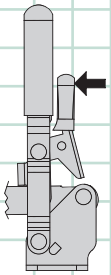

Press Lever To Unlock

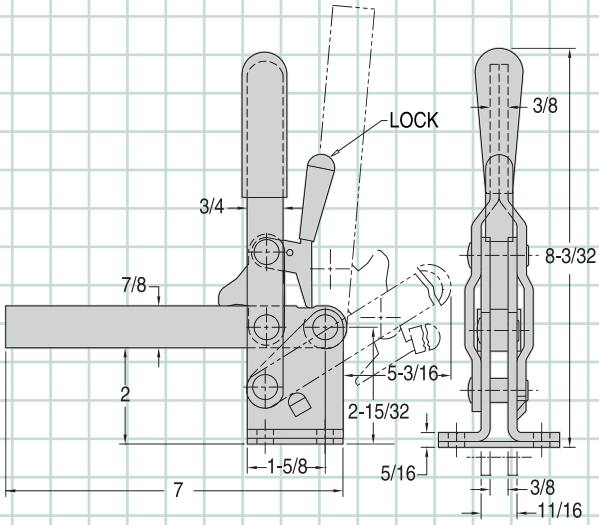

MANUFACTURING CO.
4200 Carr Lane Ct., P.O. Box 191970
St. Louis, Missouri 63119-7970 USA
Phone: 314-647-6200, FAX: 314-647-5736
Web Site: www.carrlane.com

VERTICAL HANDLE

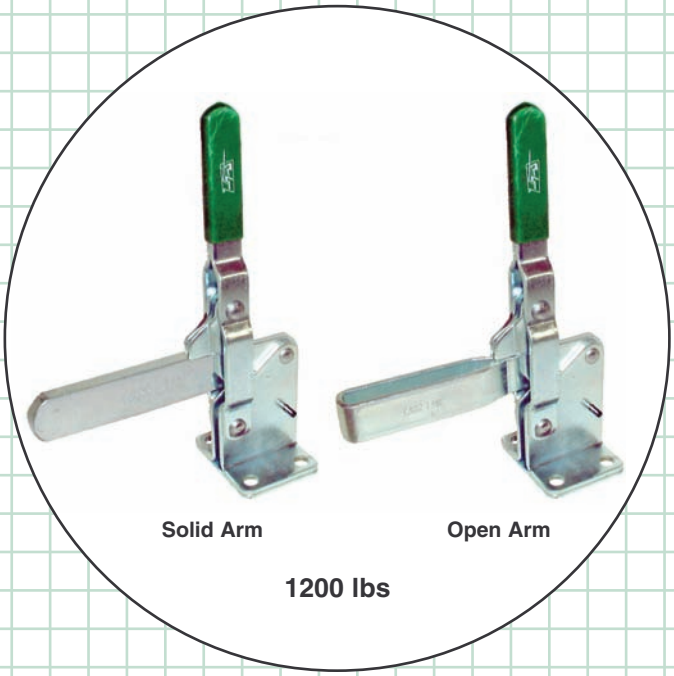

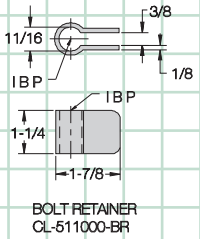

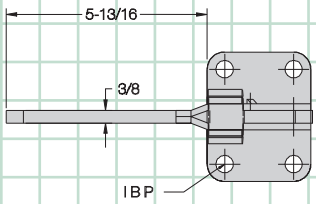

CL-950-VTC — Solid Arm
CL-1050-VTC — Open Arm

Largest wide-opening clamp available. Choose either a solid arm, or an open arm for spindle adjustment. Arm opens 140° while handle moves 70°. Accepts any 5/8-11 spindle . . . see pages 78-81 to order. Solid-arm version supplied with a CL-511000-BR bolt retainer. Open-arm version supplied with (2) CL-5811-TW flanged washers. Shipping weight 5.2 lbs.

Holding capacity: **1200 lbs**

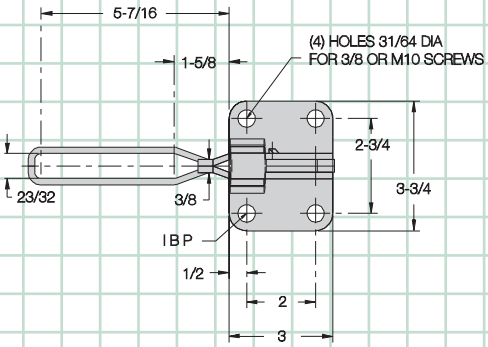

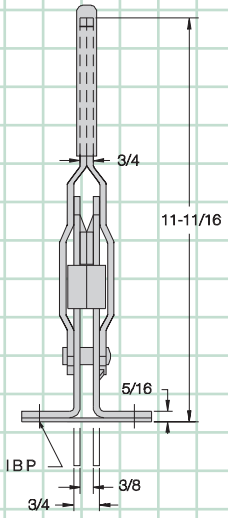

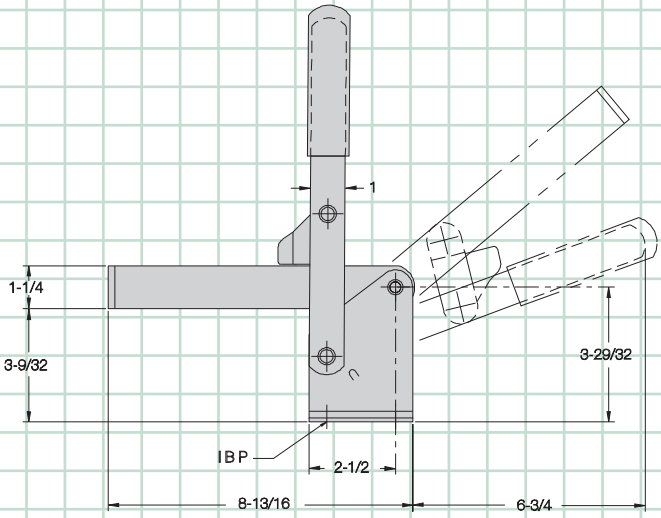

MANUFACTURING CO.
4200 Carr Lane Ct., P.O. Box 191970
St. Louis, Missouri 63119-7970 USA
Phone: 314-647-6200, FAX: 314-647-5736
Web Site: www.carrlane.com

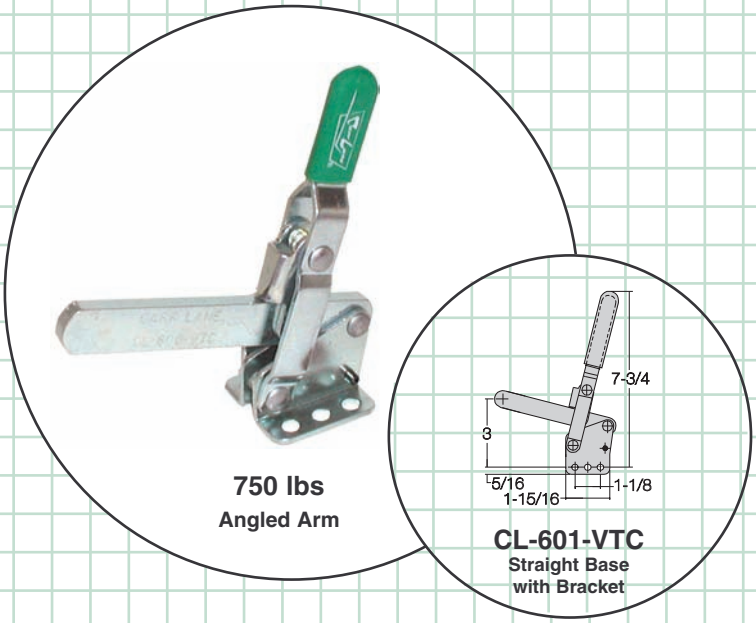

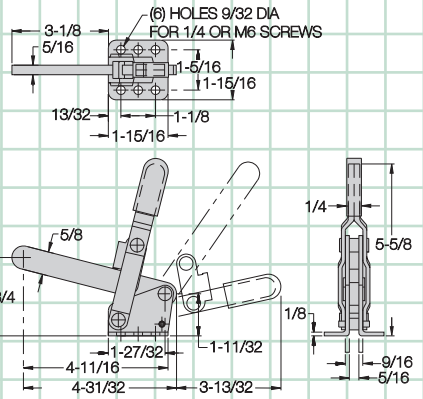

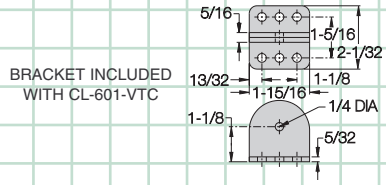

CL-600-VTC

Flanged Base

Angled-arm clamp provides increased clearance underneath arm. Also useful for applying clamping force at an angle. Solid arm opens 113° while handle moves 66°. Accepts any 3/8-16 spindle . . . see pages 78-81 to order. Supplied with a CL-316000-BR bolt retainer. Straight-base version has a longer handle and includes a separate base to allow mounting at any angle. Shipping weight 1.0 to 1.5 lbs.

Holding capacity: 750 lbs

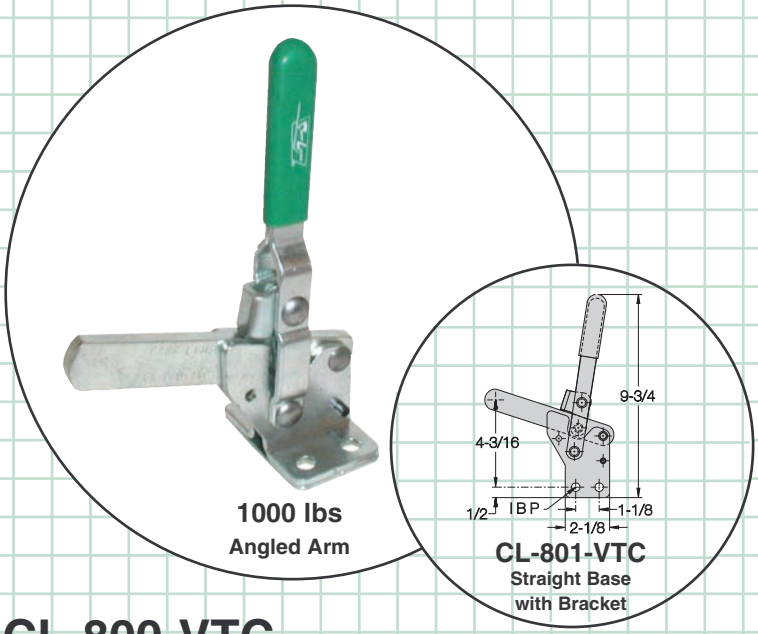

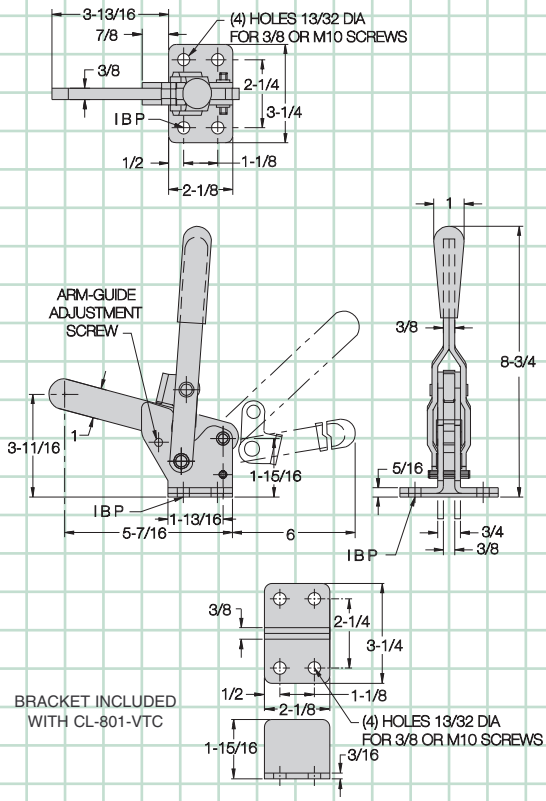

CL-800-VTC

Flanged Base

Larger-size angled-arm clamp. Solid arm opens 126° while handle moves 76°. Accepts any 5/8-11 spindle. . .see pages 78-81 to order. Supplied with a CL-511000-BR bolt retainer. Straight-base version includes a separate base to allow mounting at any angle. Shipping weight 2.5 to 2.8 lbs.

Holding capacity: 1000 lbs

Carr Lane®
MANUFACTURING CO.
4200 Carr Lane Ct., P.O. Box 191970
St. Louis, Missouri 63119-7970 USA
Phone: 314-647-6200, FAX: 314-647-5736
Web Site: www.carrlane.com

VERTICAL HANDLE

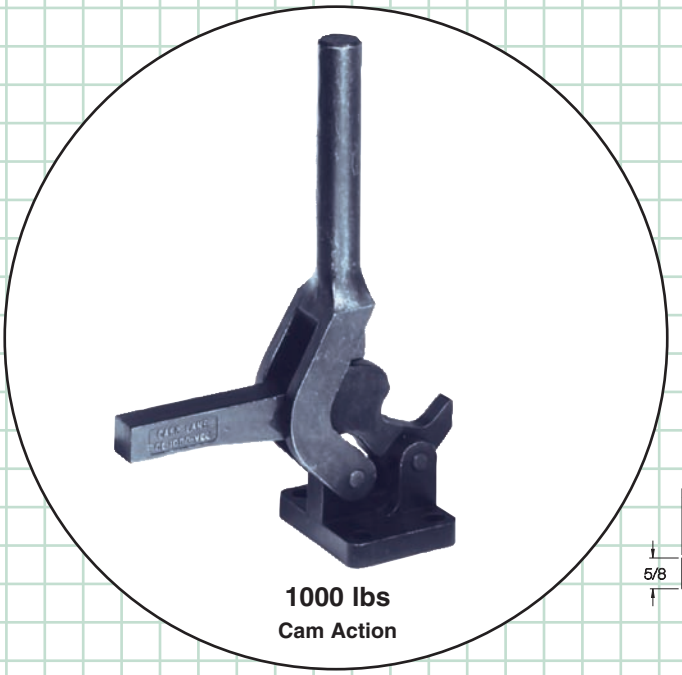

1000 lbs
Cam Action

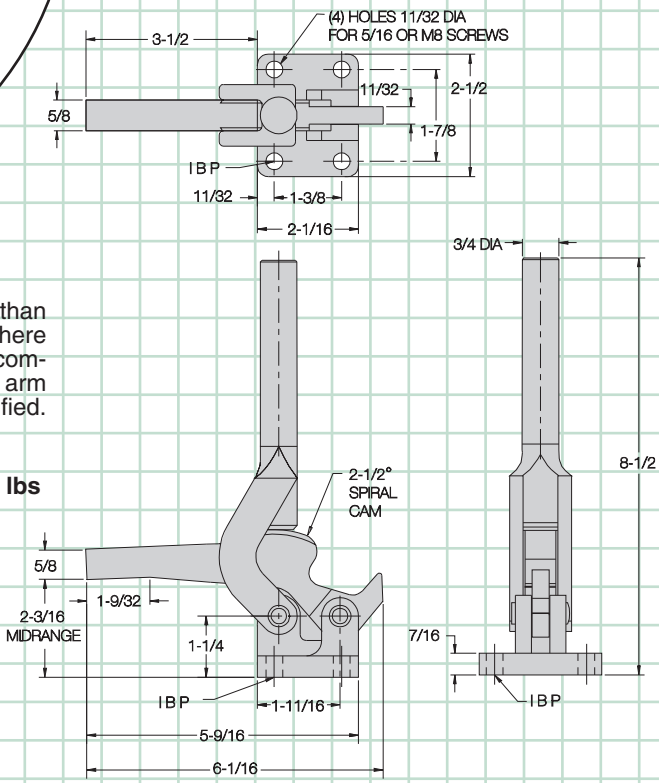

CL-1000-VCC

Wide-opening clamp that locks by cam action rather than toggle action. Smooth spiral cam locks securely anywhere within a 3/16-inch clamping range. Rugged cast-steel components are flame hardened at all wear points. Solid arm can be tapped to accept a spindle, or otherwise modified. Shipping weight 2.5 lbs.

Holding capacity: **1000 lbs**

Optional Vinyl Grip
CL-3-HVTC-G

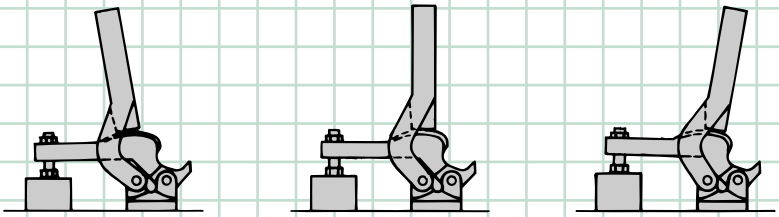

Low Limit **Average Setting** **High Limit**

MANUFACTURING CO.
4200 Carr Lane Ct., P.O. Box 191970
St. Louis, Missouri 63119-7970 USA
Phone: 314-647-6200, FAX: 314-647-5736
Web Site: www.carrlane.com

(Rev. 11/09

750 lbs
Automatic Toggle Clamp
(Self Adjusting)

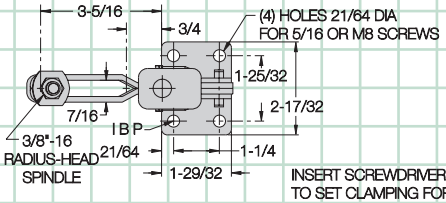

CL-650-ATC

Automatic Toggle Clamp

Automatically adjusts for different workpiece thicknesses! Clamps with the same force anywhere within its adjustment range (1-1/4"). Perfect for welding fixtures, machining fixtures for castings, fixtures holding several part sizes within the same family, or any other application where part size can vary.

Easy to use. To set up, simply adjust the contact spindle to the average workpiece height, and set desired clamping force. After that, operate just like a standard toggle clamp. The patented adjusting mechanism does the rest.

Clamping force is always consistent. The clamp's toggle action ensures that workpieces will remain clamped even under severe vibration. No additional spindle adjustment is ever needed. The clamp even compensates for wear in long production runs.

Fits in the same space, and provides the same clamping force as a standard toggle clamp. A maximum of 250 to 500 lbs clamping force (depending on spindle position) can be applied by hand. Arm opens 106° while handle moves 58°. Supplied with 3/8-16 radius spindle CL-38314-RS and (2) CL-3811-TW flanged washers. Patent no. 4,407,493. Other patents pending. Shipping weight 1.9 lbs.

Holding capacity: **750 lbs**

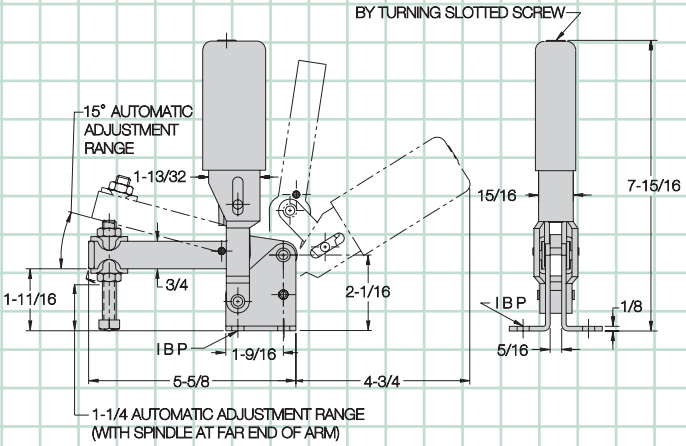

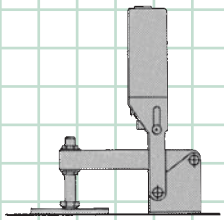

Low Limit

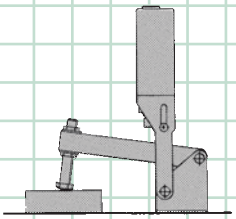

Average Setting

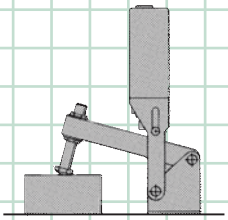

High Limit

Carr Lane®
MANUFACTURING CO.
4200 Carr Lane Ct., P.O. Box 191970
St. Louis, Missouri 63119-7970 USA
Phone: 314-647-6200, FAX: 314-647-5736
Web Site: www.carrlane.com

VERTICAL HANDLE

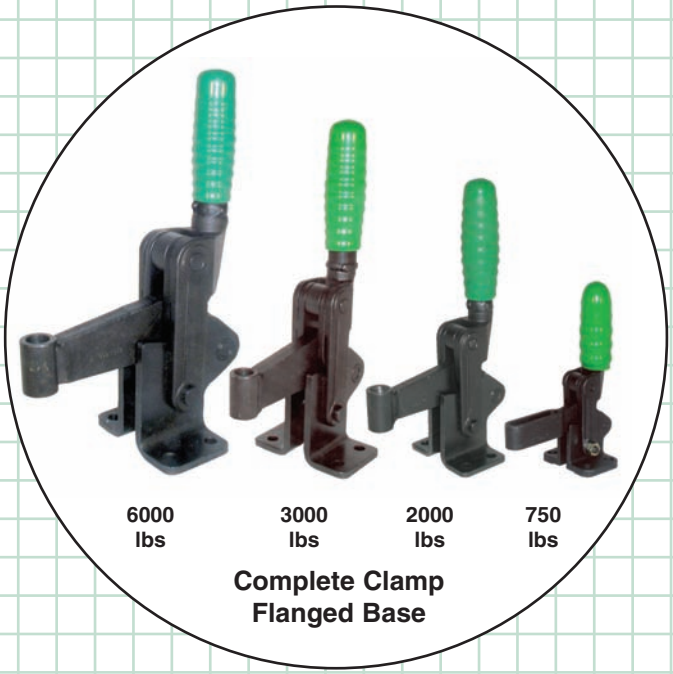

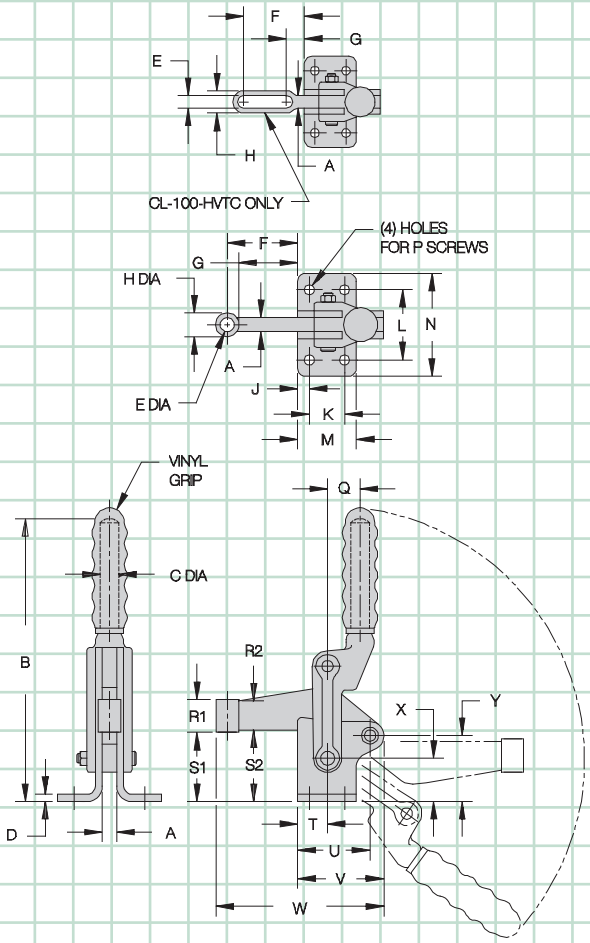

Heavy-duty automotive-type production clamps designed for extreme durability. The above configuration includes a long horizontal clamping arm with an attached bolt retainer, a vertical handle with vinyl grip, and an integral flanged base (see pages 29-31 for other versions). Precision, close-tolerance steel components throughout provide exceptionally smooth operation. Rugged alloy steel handle fork. Guided-arm feature provides positive lateral arm support. All pivot pins are hardened and ground, running in either hardened bushings or the close-tolerance holes of hardened parts. The bottom pivot is a precision bolt which can be adjusted, if desired, to fine tune the amount of free play. These clamps are built to withstand abuse. With just occasional lubrication, they will provide extremely long service life. Black oxide finish. Available in four sizes.

CL-100-HVTC

Complete Clamp, Flanged Base

Smallest of the four sizes, yet still quite powerful. Cast alloy steel base and slotted open clamping arm on this size only. Arm opens 130° while handle moves 90°. Accepts any 1/4-20 spindle…see pages 78-81 to order. Supplied with (2) CL-148-TW flanged washers. Shipping weight 1.0 lbs.

Holding capacity: 750 lbs

CL-300-HVTC

Complete Clamp, Flanged Base

Solid arm opens 180° while handle moves 120°. Accepts any 1/2-13 spindle…see pages 78-81 to order. Shipping weight 2.8 lbs.

Holding capacity: 2000 lbs

CL-500-HVTC

Complete Clamp, Flanged Base

Solid arm opens 180° while handle moves 125°. Accepts any 1/2-13 spindle…see pages 78-81 to order. Shipping weight 4.3 lbs.

Holding capacity: 3000 lbs

CL-600-HVTC

Complete Clamp, Flanged Base

Our most-powerful hold-down toggle clamp. Solid arm opens 195° while handle moves 130°. Accepts any 5/8-11 spindle…see pages 78-81 to order. Shipping weight 9.1 lbs.

Holding capacity: 6000 lbs

PART NO. COMPLETE CLAMP	A	B	C DIA	D	E	F	G	H	J	K	L	M	N	P	Q	R1	R2	S1	S2	T	U	V	W	X	Y
CL-100-HVTC	.236	4.45	.50	.197	.26	1.54	.35	.49	.236	.748	1.260	1.22	1.73	1/4 or M6	.55	.59	.59	.98	.98	.59	1.26	1.54	3.31	.51	.87
CL-300-HVTC	.394	8.46	.75	.197	.52	1.97	1.57	.75	.394	.984	1.969	1.77	2.64	5/16 or M8	.91	1.18	.87	1.89	1.89	.98	2.13	2.52	4.87	1.10	1.72
CL-500-HVTC	.472	9.84	.87	.236	.52	2.36	1.97	.75	.394	1.181	2.362	1.97	3.46	5/16 or M8	.98	1.18	1.02	2.28	2.32	.98	2.40	2.92	5.66	1.42	2.19
CL-600-HVTC	.630	11.61	.98	.315	.64	2.95	2.36	1.00	.472	1.575	2.953	2.48	4.13	3/8 or M10	1.38	1.50	1.26	2.76	2.95	1.57	3.31	3.98	7.43	1.81	2.76

Carr Lane MANUFACTURING CO.
4200 Carr Lane Ct., P.O. Box 191970
St. Louis, Missouri 63119-7970 USA
Phone: 314-647-6200, FAX: 314-647-5736
Web Site: www.carrlane.com

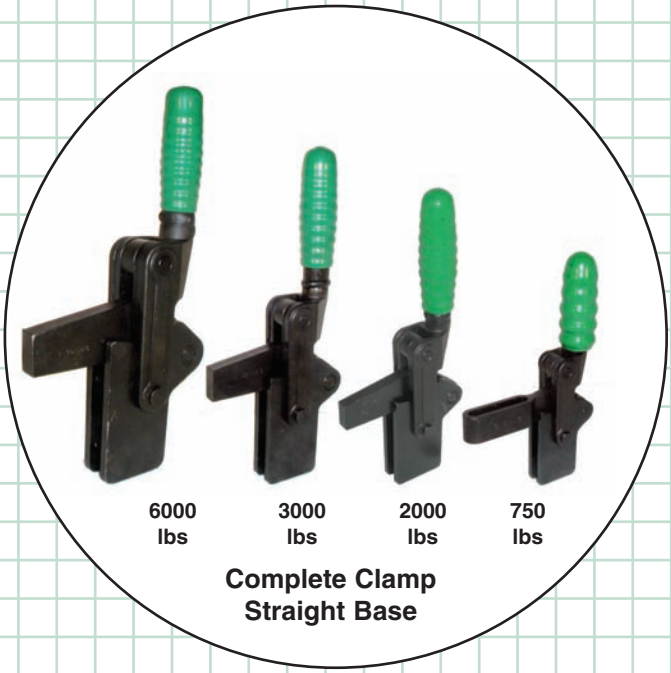

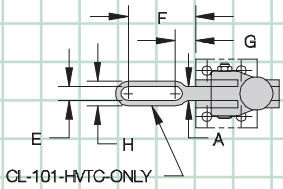

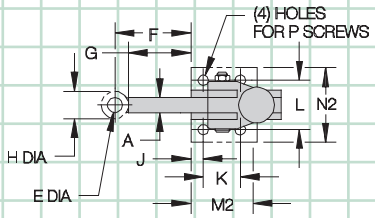

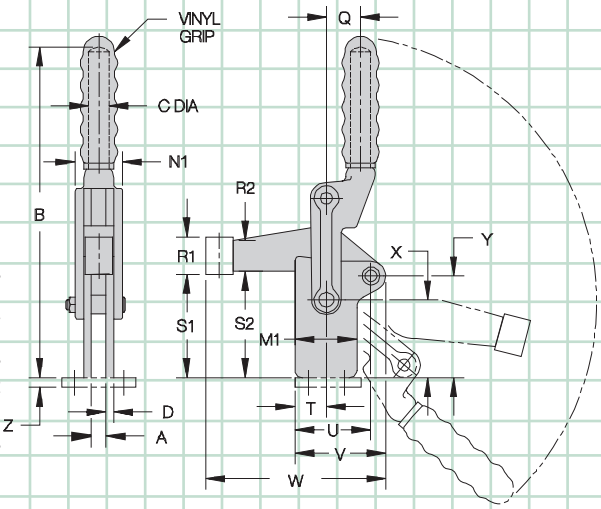

Heavy-duty automotive-type production clamps designed for extreme durability. The above configuration includes a long horizontal clamping arm furnished with a bolt retainer (not welded on), a vertical handle with vinyl grip, and a straight base for plate/tongue mounting at any angle (see pages 28, 30, and 31 for other versions). Precision, close-tolerance steel components throughout provide exceptionally smooth operation. Rugged alloy steel handle fork. Guided-arm feature provides positive lateral arm support. All pivot pins are hardened and ground, running in either hardened bushings or the close-tolerance holes of hardened parts. The bottom pivot is a precision bolt which can be adjusted, if desired, to fine tune the amount of free play. These clamps are built to withstand abuse. With just occasional lubrication, they will provide extremely long service life. Black oxide finish. Available in four sizes.

CL-101-HVTC

Complete Clamp, Straight Base

Smallest of the four sizes, yet still quite powerful. Cast alloy steel slotted open clamping arm on this size only. Arm opens 205° while handle moves 130°. Accepts any 1/4-20 spindle…see pages 78-81 to order. Supplied with (2) CL-148-TW flanged washers. Shipping weight 0.9 lbs.

Holding capacity: 750 lbs

CL-301-HVTC

Complete Clamp, Straight Base

Solid arm opens 205° while handle moves 130°. Accepts any 1/2-13 spindle…see pages 78-81 to order. Shipping weight 2.5 lbs.

Holding capacity: 2000 lbs

CL-501-HVTC

Complete Clamp, Straight Base

Solid arm opens 195° while handle moves 130°. Accepts any 1/2-13 spindle…see pages 78-81 to order. Shipping weight 4.0 lbs.

Holding capacity: 3000 lbs

CL-601-HVTC

Complete Clamp, Straight Base

Our most-powerful hold-down toggle clamp. Solid arm opens 195° while handle moves 130°. Accepts any 5/8-11 spindle…see pages 78-81 to order. Shipping weight 8.3 lbs.

Holding capacity: 6000 lbs

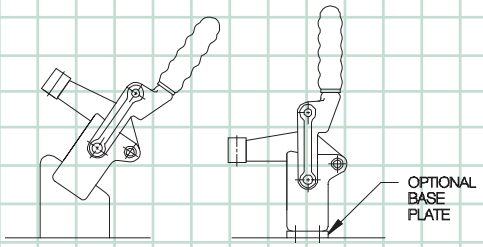

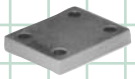

Base Plate
(order separately)
CL-1-HVTC-P (750 lbs)
CL-3-HVTC-P (2000 lbs)
CL-5-HVTC-P (3000 lbs)
CL-6-HVTC-P (6000 lbs)

PART NO. COMPLETE CLAMP	A	B	C DIA	D	E	F	G	H	J	K	L	M1	M2	N1	N2	P	Q	R1	R2	S1	S2	T	U	V	W	X	Y	Z
CL-101-HVTC	.236	5.08	.50	.118	.26	1.54	.35	.49	.236	.748	1.260	1.06	1.10	.79	1.73	#10 or M5	.55	.59	.59	1.61	1.61	.59	1.26	1.54	3.31	1.14	1.50	.236
CL-301-HVTC	.394	9.25	.75	.197	.52	1.97	1.57	.75	.295	.984	1.378	1.77	1.57	1.26	1.97	1/4 or M6	.91	1.18	.87	2.76	2.76	.98	2.13	2.52	4.87	1.97	2.59	.315
CL-501-HVTC	.472	10.87	.87	.236	.52	2.36	1.97	.75	.394	1.181	1.575	1.97	1.97	1.50	2.36	5/16 or M8	.98	1.18	1.02	3.35	3.39	.98	2.40	2.92	5.66	2.48	3.25	.315
CL-601-HVTC	.630	12.60	.98	.315	.64	2.95	2.36	1.00	.394	1.772	1.969	2.48	2.56	1.97	2.76	5/16 or M8	1.38	1.50	1.26	3.94	4.13	1.57	3.31	3.98	7.43	2.99	3.94	.315

Carr Lane MANUFACTURING CO.
4200 Carr Lane Ct., P.O. Box 191970
St. Louis, Missouri 63119-7970 USA
Phone: 314-647-6200, FAX: 314-647-5736
Web Site: www.carrlane.com

VERTICAL HANDLE

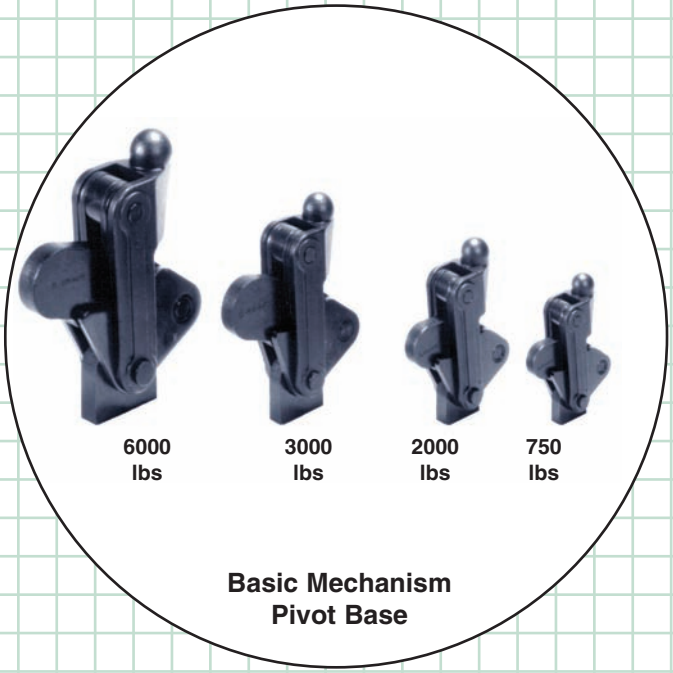

Basic Mechanism Pivot Base

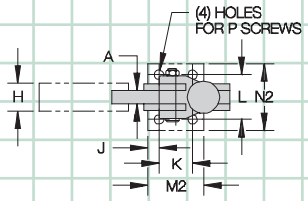

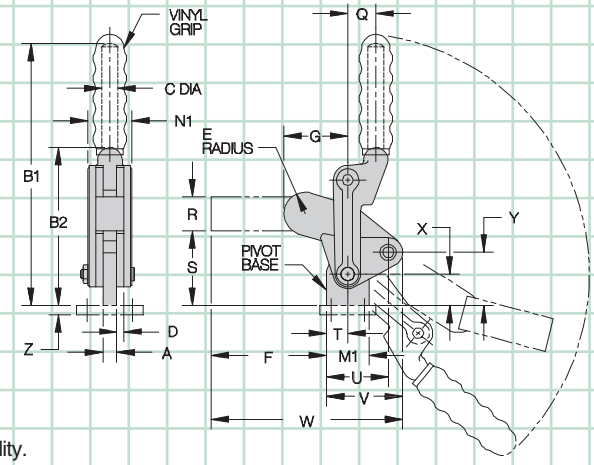

Heavy-duty automotive-type production clamps designed for extreme durability. The above configuration is a basic toggle mechanism onto which an arm and handle can be welded at any desired angle (see pages 28, 29, and 31 for other versions). The pivot base must be welded to both the clamp mechanism and the fixture, or the optional base plate, after setting the clamp at the proper angle. Precision, close-tolerance steel components throughout provide exceptionally smooth operation. Rugged alloy steel handle fork. Guided-arm feature provides positive lateral arm support. All pivot pins are hardened and ground, running in either hardened bushings or the close-tolerance holes of hardened parts. The bottom pivot is a precision bolt which can be adjusted, if desired, to fine tune the amount of free play. These clamps are built to withstand abuse. With just occasional lubrication, they will provide extremely long service life. Black oxide finish. Available in four sizes.

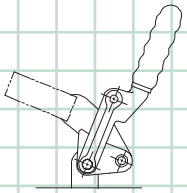

Weld clamp mechanism to pivot base at any desired angle.

CL-110-HVTC

Basic Mechanism, Pivot Base

Smallest of the four sizes, yet still quite powerful. Arm opens 205° while handle moves 130°. Shipping weight 0.6 lbs. To order basic mechanism without the pivot base, specify part no. CL-120-HVTC.

Holding capacity: 750 lbs

CL-310-HVTC

Basic Mechanism, Pivot Base

Arm opens 205° while handle moves 130°. Shipping weight 1.6 lbs. To order basic mechanism without the pivot base, specify part no. CL-320-HVTC.

Holding capacity: 2000 lbs

CL-510-HVTC

Basic Mechanism, Pivot Base

Arm opens 195° while handle moves 130°. Shipping weight 2.9 lbs. To order basic mechanism without the pivot base, specify part no. CL-520-HVTC.

Holding capacity: 3000 lbs

CL-610-HVTC

Basic Mechanism, Pivot Base

Our most-powerful hold-down toggle clamp. Arm opens 195° while handle moves 130°. Shipping weight 6.4 lbs. To order basic mechanism without the pivot base, specify part no. CL-620-HVTC.

Holding capacity: 6000 lbs

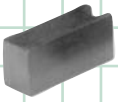

Clamping Arm (order separately)

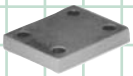

Base Plate (order separately)

Handle (order separately)

Vinyl Grip (order separately)

ACCESSORIES

CLAMP SIZE	PART NO. CLAMPING ARM	PART NO. BASE PLATE	PART NO. HANDLE	PART NO. VINYL GRIP
750 lbs	CL-1-HVTC-A	CL-1-HVTC-P	CL-1-HVTC-H	CL-1-HVTC-G
2000 lbs	CL-3-HVTC-A	CL-3-HVTC-P	CL-3-HVTC-H	CL-3-HVTC-G
3000 lbs	CL-5-HVTC-A	CL-5-HVTC-P	CL-5-HVTC-H	CL-5-HVTC-G
6000 lbs	CL-6-HVTC-A	CL-6-HVTC-P	CL-6-HVTC-H	CL-6-HVTC-G

PART NO. BASIC MECHANISM	A	B1	B2	C DIA	D	E	F	G	H	J	K	L	M1	M2	N1	N2	P	Q	R	S	T	U	V	W	X	Y	Z
CL-110-HVTC	.236	4.33	2.60	.50	.118	.39	2.76	1.14	.472	.197	.709	.984	.71	1.10	.79	1.38	#10 or M5	.55	.630	.94	.35	1.02	1.30	4.06	.39	.75	.236
CL-310-HVTC	.394	8.07	4.49	.75	.197	.55	2.97	1.57	.787	.295	.984	1.378	1.14	1.57	1.26	1.97	1/4 or M6	.91	.984	1.79	.57	1.71	2.11	5.08	.79	1.41	.315
CL-510-HVTC	.472	9.49	5.47	.87	.236	.75	4.06	2.24	.984	.394	1.181	1.575	1.50	1.97	1.54	2.36	5/16 or M8	.98	1.181	2.64	.75	2.17	2.68	6.74	1.10	1.87	.315
CL-610-HVTC	.630	10.91	6.97	.98	.315	.87	5.16	2.83	1.181	.394	1.772	1.969	2.05	2.56	1.97	2.76	5/16 or M8	1.38	1.378	3.33	1.02	2.74	3.43	8.59	1.30	2.24	.315

Carr Lane MANUFACTURING CO.
4200 Carr Lane Ct., P.O. Box 191970
St. Louis, Missouri 63119-7970 USA
Phone: 314-647-6200, FAX: 314-647-5736
Web Site: www.carrlane.com

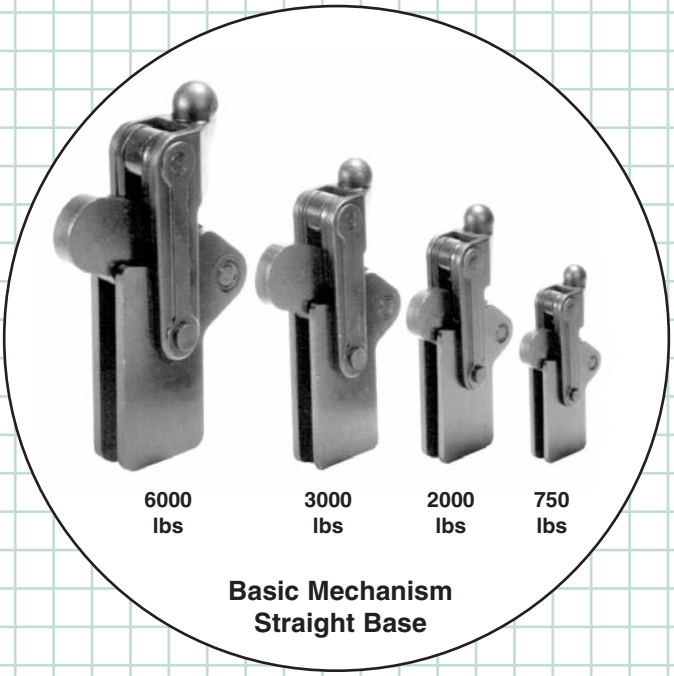

Basic Mechanism Straight Base

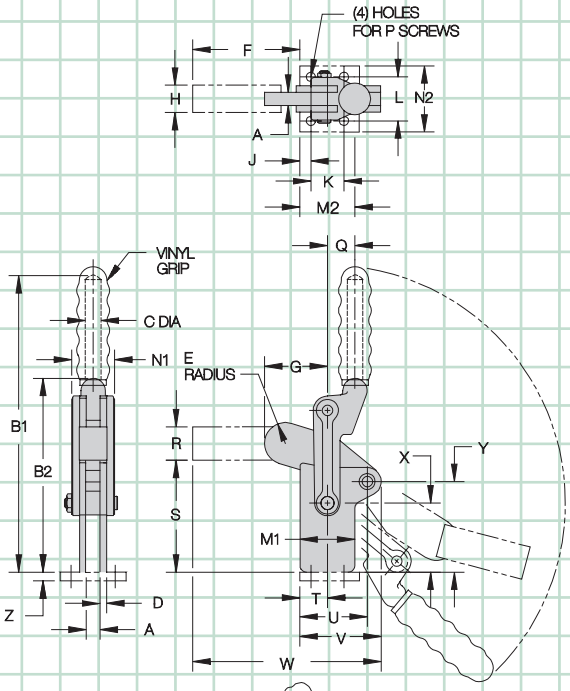

Heavy-duty automotive-type production clamps designed for extreme durability. The above configuration is a basic toggle mechanism onto which an arm and handle can be welded at any desired angle (see pages 28-30 for other versions). The straight base is ideal for plate/tongue mounting at any angle. Alternatively, the optional base plate can be attached to construct a tall flanged-base clamp. Precision, close-tolerance steel components throughout provide exceptionally smooth operation. Rugged alloy steel handle fork. Guided-arm feature provides positive lateral arm support. All pivot pins are hardened and ground, running in either hardened bushings or the close-tolerance holes of hardened parts. The bottom pivot is a precision bolt which can be adjusted, if desired, to fine tune the amount of free play. These clamps are built to withstand abuse. With just occasional lubrication, they will provide extremely long service life. Black oxide finish. Available in four sizes.

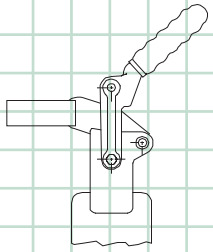

Straight-base clamps are ideal for welding onto plates.

CL-111-HVTC

Basic Mechanism, Straight Base

Smallest of the four sizes, yet still quite powerful. Arm opens 205° while handle moves 130°. Shipping weight 0.8 lbs.

Holding capacity: 750 lbs

CL-311-HVTC

Basic Mechanism, Straight Base

Arm opens 205° while handle moves 130°. Shipping weight 1.8 lbs.

Holding capacity: 2000 lbs

CL-511-HVTC

Basic Mechanism, Straight Base

Arm opens 195° while handle moves 130°. Shipping weight 3.2 lbs.

Holding capacity: 3000 lbs

CL-611-HVTC

Basic Mechanism, Straight Base

Our most-powerful hold-down toggle clamp. Arm opens 195° while handle moves 130°. Shipping weight 7.1 lbs.

Holding capacity: 6000 lbs

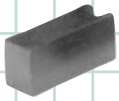

Clamping Arm (order separately)

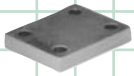

Base Plate (order separately)

Handle (order separately)

Vinyl Grip (order separately)

ACCESSORIES

CLAMP SIZE	PART NO. CLAMPING ARM	PART NO. BASE PLATE	PART NO. HANDLE	PART NO. VINYL GRIP
750 lbs	CL-1-HVTC-A	CL-1-HVTC-P	CL-1-HVTC-H	CL-1-HVTC-G
2000 lbs	CL-3-HVTC-A	CL-3-HVTC-P	CL-3-HVTC-H	CL-3-HVTC-G
3000 lbs	CL-5-HVTC-A	CL-5-HVTC-P	CL-5-HVTC-H	CL-5-HVTC-G
6000 lbs	CL-6-HVTC-A	CL-6-HVTC-P	CL-6-HVTC-H	CL-6-HVTC-G

PART NO. BASIC MECHANISM	A	B1	B2	C DIA	D	E	F	G	H	J	K	L	M1	M2	N1	N2	P	Q	R	S	T	U	V	W	X	Y	Z
CL-111-HVTC	.236	5.08	3.39	.50	.118	.39	2.52	1.14	.472	.197	.709	.984	1.06	1.10	.79	1.38	#10 or M5	.55	.630	1.73	.59	1.26	1.54	4.06	1.18	1.54	.236
CL-311-HVTC	.394	9.25	5.67	.75	.197	.55	2.56	1.57	.787	.295	.984	1.378	1.77	1.57	1.26	1.97	1/4 or M6	.91	.984	2.97	.98	2.13	2.52	5.08	1.97	2.59	.315
CL-511-HVTC	.472	10.87	6.97	.87	.236	.75	3.82	2.24	.984	.394	1.181	1.575	1.97	1.97	1.50	2.36	5/16 or M8	.98	1.181	4.02	.98	2.40	2.92	6.74	2.48	3.25	.315
CL-611-HVTC	.630	12.60	8.66	.98	.315	.87	4.61	2.83	1.181	.394	1.772	1.969	2.48	2.56	1.97	2.76	5/16 or M8	1.38	1.378	5.02	1.57	3.31	3.98	8.59	2.99	3.94	.315

Carr Lane MANUFACTURING CO.
4200 Carr Lane Ct., P.O. Box 191970
St. Louis, Missouri 63119-7970 USA
Phone: 314-647-6200, FAX: 314-647-5736
Web Site: www.carrlane.com

VERTICAL HANDLE

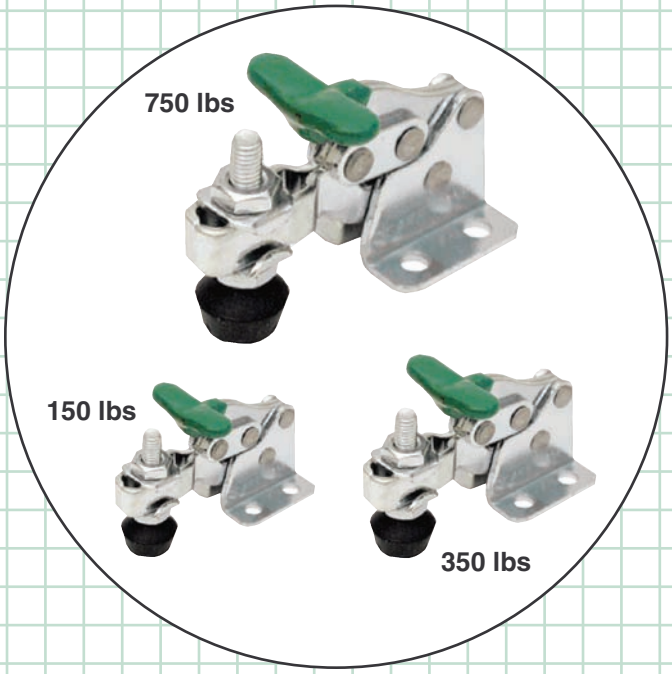

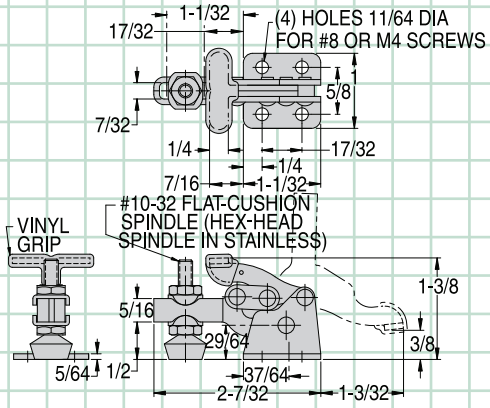

CL-200-VTC

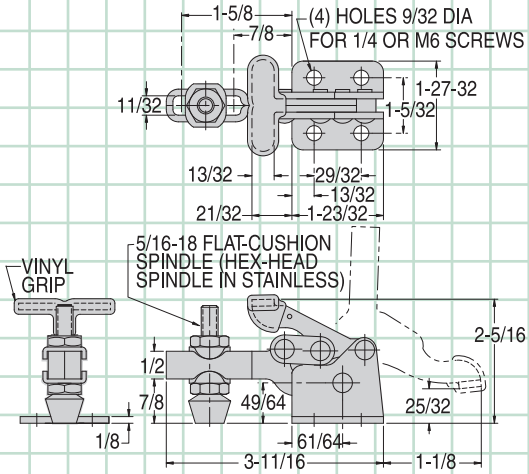

CL-300-VTC

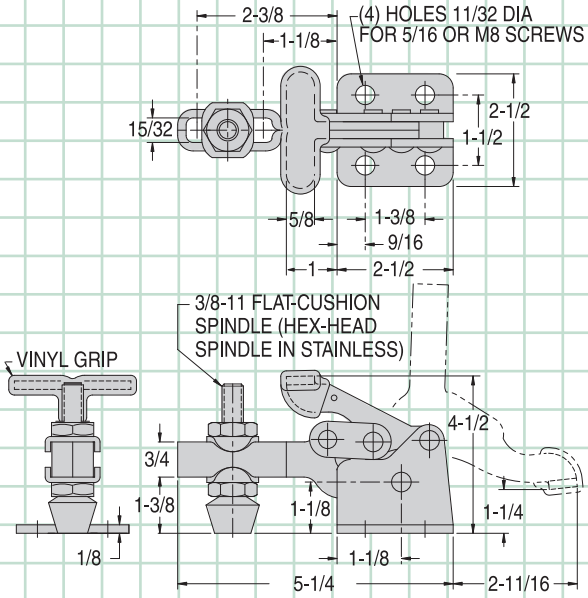

CL-500-VTC

Hold-down toggle clamp with a unique finger-grip T handle. Extremely compact design. Open arm provides adjustable spindle location. Arm opens 92° while handle moves 175°.

CL-200-VTC

Miniature-size T-handle clamp. Supplied with #10-32 flat-cushion spindle CL-316112-FC and (2) CL-3166-TW flanged washers. Shipping weight 0.2 lbs.

Holding capacity: **150 lbs**

CL-300-VTC NEW!

Medium-size T-handle clamp. Supplied with 5/16-18 flat-cushion spindle CL-518208-FC and (2) CL-51610-TW flanged washers. Shipping weight 0.6 lbs.

Holding capacity: **350 lbs**

CL-500-VTC NEW!

Large-size T-handle clamp. Supplied with 3/8-16 flat-cushion spindle CL-38212-FC and (2) CL-3811-TW flanged washers. Shipping weight 1.3 lbs.

Holding capacity: **750 lbs**

Also available in stainless steel...

CL-200-VTC-S
150 lbs

CL-300-VTC-S
350 lbs

CL-500-VTC-S
750 lbs

MANUFACTURING CO.
4200 Carr Lane Ct., P.O. Box 191970
St. Louis, Missouri 63119-7970 USA
Phone: 314-647-6200, FAX: 314-647-5736
Web Site: www.carrlane.com

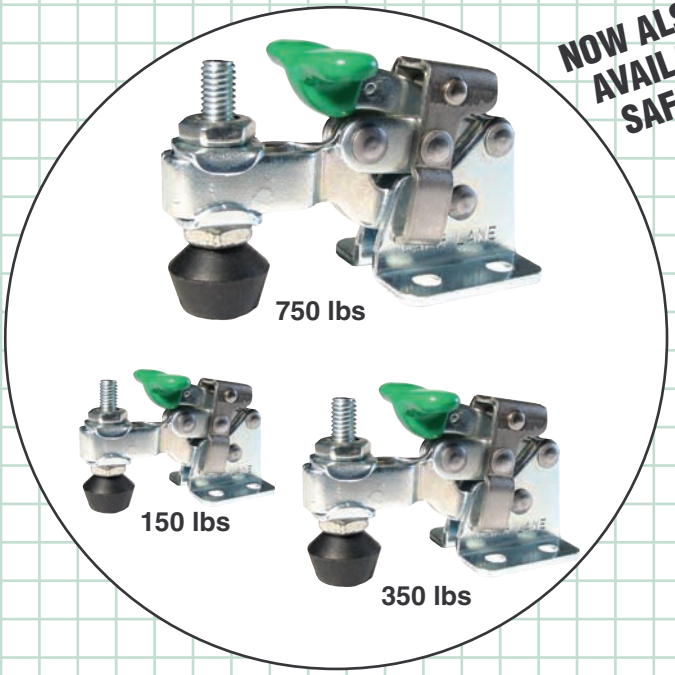

NOW ALSO AVAILABLE WITH SAFETY LOCK!

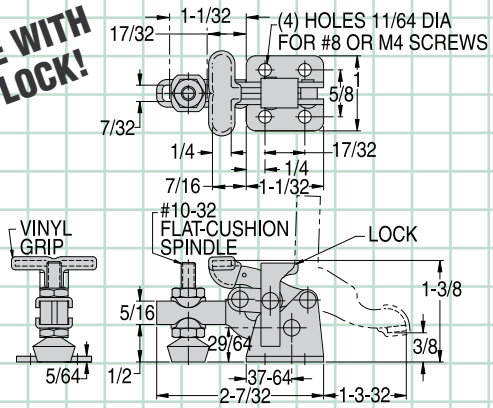

CL-200-LVTC

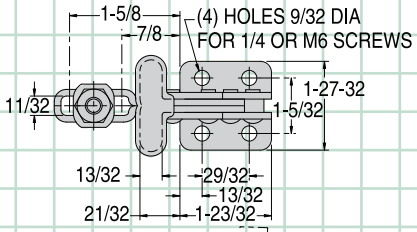

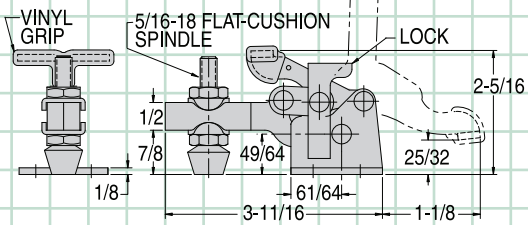

CL-300-LVTC

Same as our hold-down toggle clamps on page 28, except with our new safety-lock feature. This safety lock automatically engages when the clamp is closed, then remains locked until manually disengaged by pressing the lever before opening. This prevents the clamp from being accidentally opened by bumping the handle. This clamp has a unique finger-grip T handle. Extremely compact design. Open arm provides adjustable spindle location. Arm opens 92º while handle moves 175º.

CL-200-LVTC

With Safety Lock

Miniature-size T-handle clamp. Supplied with #10-32 flat-cushion spindle CL-316112-FC and (2) CL-3166-TW flanged washers. Shipping weight 0.2 lbs.

Holding capacity: **150 lbs**

CL-300-LVTC

With Safety Lock

Medium-size T-handle clamp. Supplied with 5/16-18 flat-cushion spindle CL-518208-FC and (2) CL-51610-TW flanged washers. Shipping weight 0.6 lbs.

Holding capacity: **350 lbs**

CL-500-LVTC

With Safety Lock

Large-size T-handle clamp. Supplied with 3/8-16 flat-cushion spindle CL-38212-FC and (2) CL-3811-TW flanged washers. Shipping weight 1.3 lbs.

Holding capacity: **750 lbs**

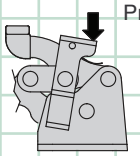

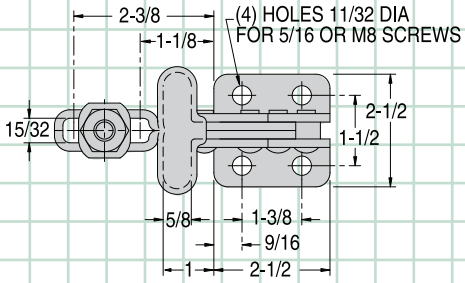

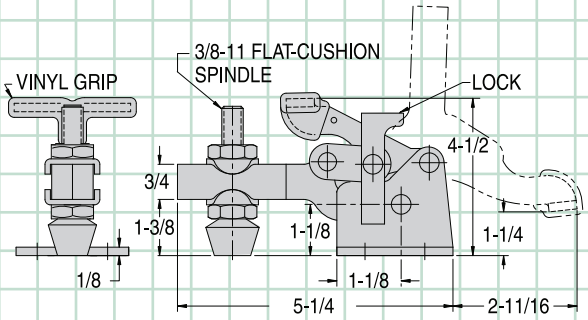

CL-500-LVTC

Carr Lane®
MANUFACTURING CO.
4200 Carr Lane Ct., P.O. Box 191970
St. Louis, Missouri 63119-7970 USA
Phone: 314-647-6200, FAX: 314-647-5736
Web Site: www.carrlane.com

VERTICAL HANDLE

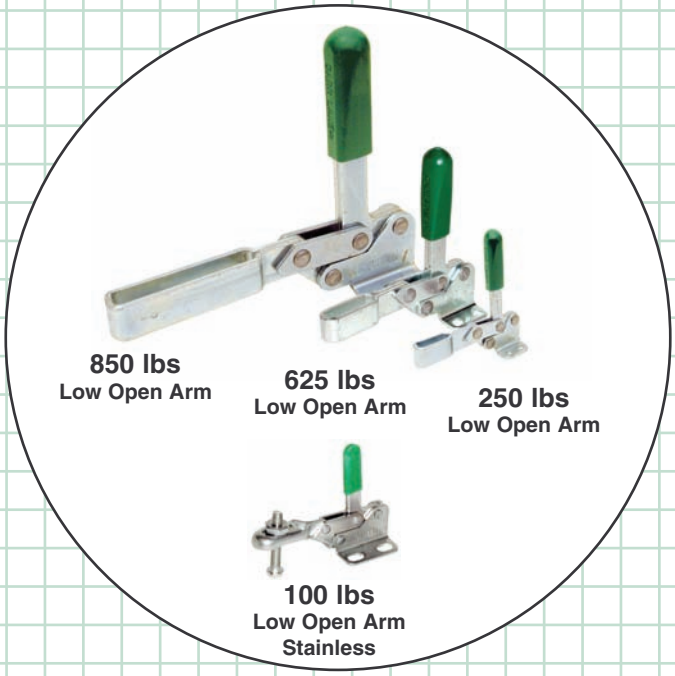

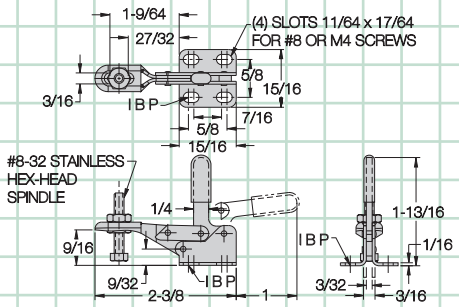

CL-11-TC

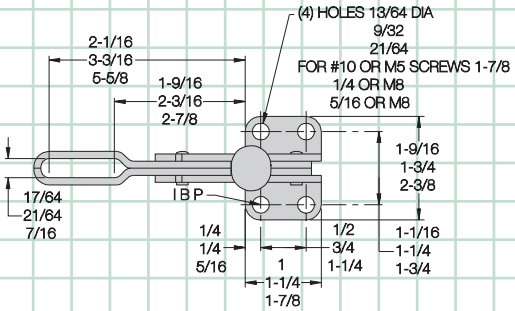

Simple, easy-opening clamps with excellent arm reach, extending farther over workpiece than any other clamps their size. Open arm allows spindle adjustment (see p. 35 for solid-arm version). Arm opens 83° while handle moves 83°. Available in four sizes.

CL-11-TC
Low Open Arm, Flanged Base

Miniature clamp in stainless steel. Supplied with #8-32 hex-head spindle CL-832203-SA-S. Shipping weight 0.1 lbs.

Holding capacity: 100 lbs

CL-111-TC
Low Open Arm, Flanged Base

Small-size clamp. Accepts any 1/4-20 spindle and (2) CL-147-TW flanged washers . . . see pages 78-82 to order. Shipping weight 0.3 lbs.

Holding capacity: 250 lbs

CL-211-TC
Low Open Arm, Flanged Base

Medium-size clamp. Accepts any 5/16-18 spindle and (2) CL-51610-TW flanged washers . . . see pages 78-82 to order. Shipping weight 0.5 lbs.

Holding capacity: 625 lbs

CL-311-TC
Low Open Arm, Flanged Base

Large-size clamp. Arm extends a full 6 inches over workpiece. Accepts any 3/8-16 spindle and (2) CL-3811-TW flanged washers . . . see pages 78-82 to order. Shipping weight 1.4 lbs.

Holding capacity: 850 lbs

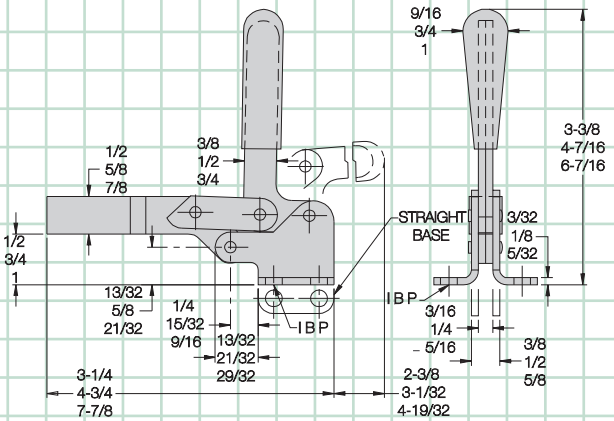

CL-111-TC (Top dimension)
CL-211-TC (Middle dimension)
CL-311-TC (Bottom dimension)

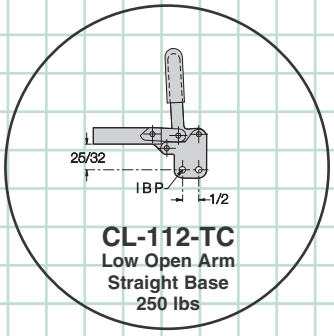

CL-112-TC
Low Open Arm
Straight Base
250 lbs

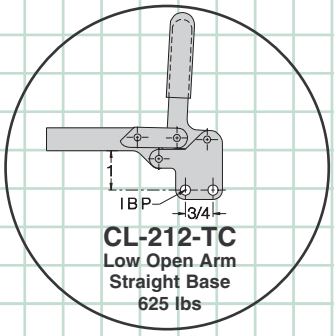

CL-212-TC
Low Open Arm
Straight Base
625 lbs

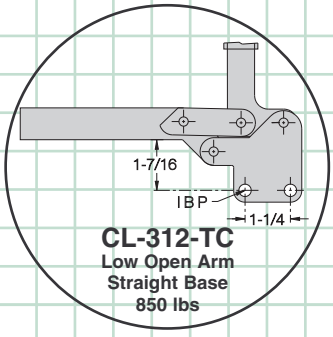

CL-312-TC
Low Open Arm
Straight Base
850 lbs

Carr Lane MANUFACTURING CO.
4200 Carr Lane Ct., P.O. Box 191970
St. Louis, Missouri 63119-7970 USA
Phone: 314-647-6200, FAX: 314-647-5736
Web Site: www.carrlane.com

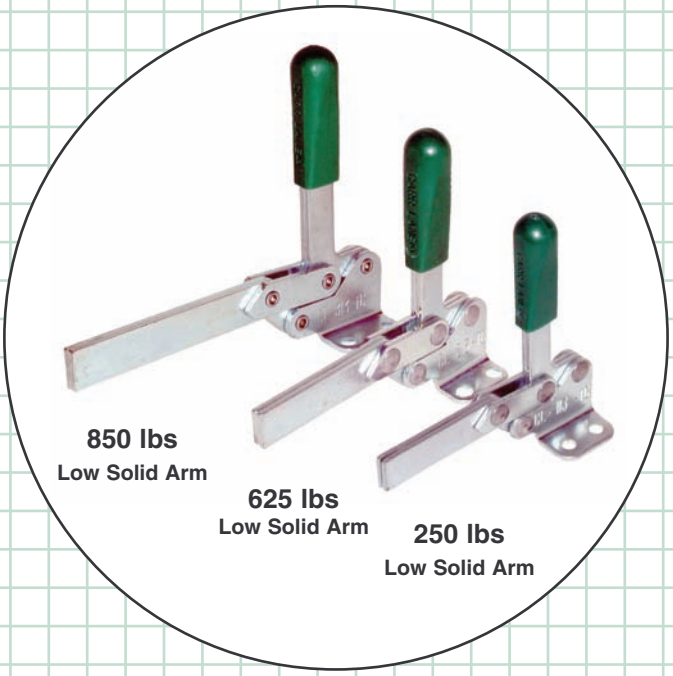

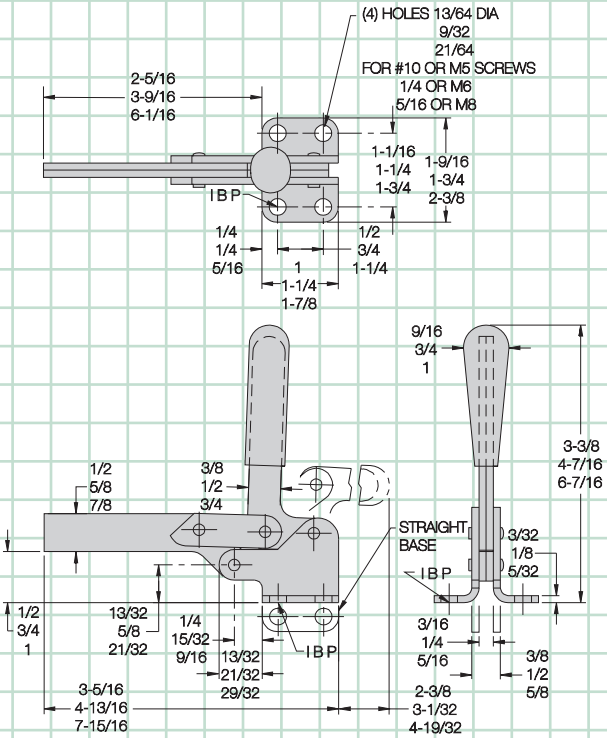

Simple, easy-opening clamps with excellent arm reach, extending farther over workpiece than any other clamps their size. Solid arm for weld-on bolt retainers (see p. 34 for open-arm version). Arm opens 83° while handle moves 83°. Available in three sizes.

CL-113-TC

Low Solid Arm, Flanged Base

Small-size clamp. Accepts any 1/4-20 spindle and a CL-1458-S bolt retainer . . . see pages 78-82 to order. Shipping weight 0.3 lbs.

Holding capacity: 250 lbs

CL-213-TC

Low Solid Arm, Flanged Base

Medium-size clamp. Accepts any 5/16-18 spindle and a CL-51658-S or CL-518000-BR bolt retainer . . . see pages 78-82 to order. Shipping weight 0.5 lbs.

Holding capacity: 625 lbs

CL-313-TC

Low Solid Arm, Flanged Base

Large-size clamp. Arm extends a full 6 inches over workpiece. Accepts any 3/8-16 spindle and a CL-3878-S or CL-316000-BR bolt retainer . . . see pages 78-82 to order. Shipping weight 1.4 lbs.

Holding capacity: 850 lbs

CL-113-TC (Top dimension)
CL-213-TC (Middle dimension)
CL-313-TC (Bottom dimension)

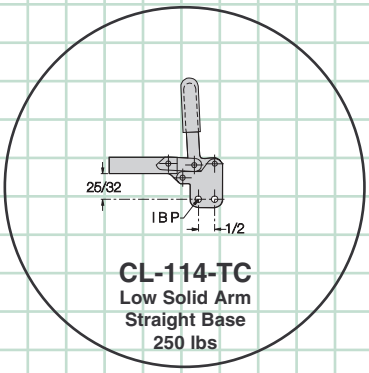

CL-114-TC
Low Solid Arm
Straight Base
250 lbs

CL-214-TC
Low Solid Arm
Straight Base
625 lbs

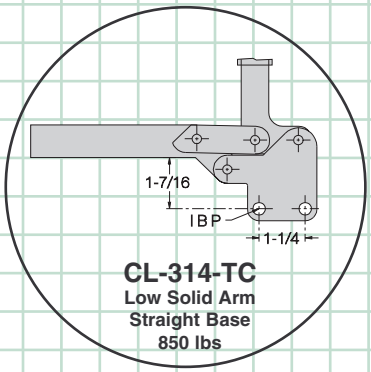

CL-314-TC
Low Solid Arm
Straight Base
850 lbs

Carr Lane MANUFACTURING CO.
4200 Carr Lane Ct., P.O. Box 191970
St. Louis, Missouri 63119-7970 USA
Phone: 314-647-6200, FAX: 314-647-5736
Web Site: www.carrlane.com

VERTICAL HANDLE

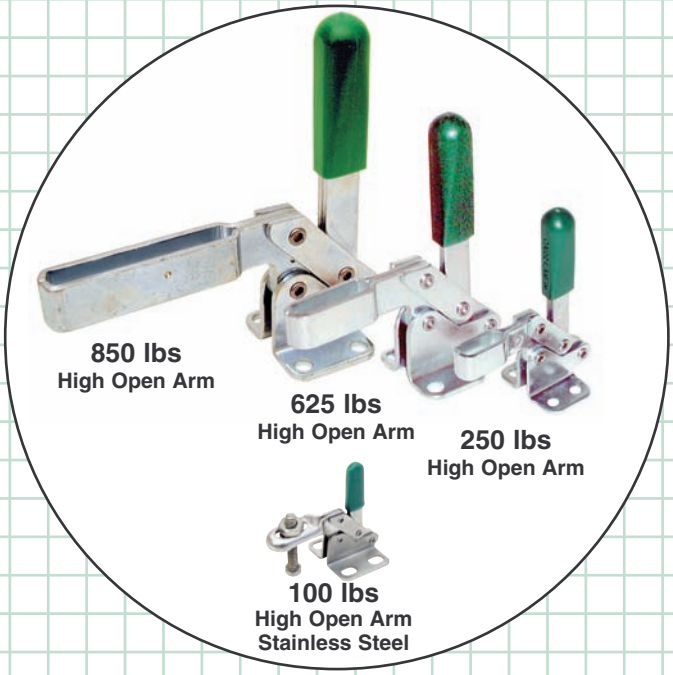

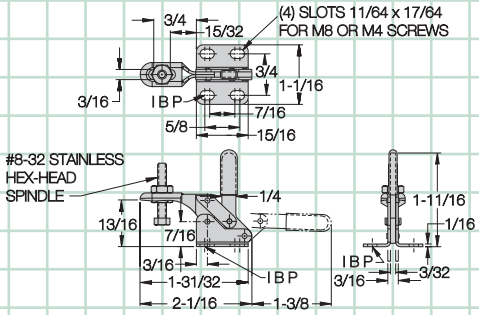

CL-21-TC

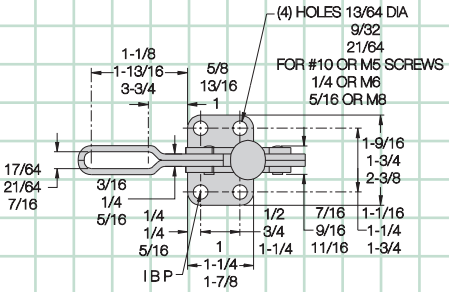

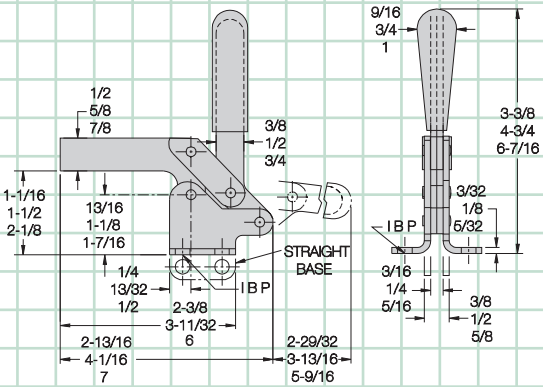

Simple, easy-opening clamps with extra arm height. Open arm allows spindle adjustment (see p. 37 for solid-arm version). Arm opens 83° while handle moves 83°. Available in four sizes.

CL-21-TC
High Open Arm, Flanged Base

Miniature clamp in stainless steel. Supplied with #8-32 hex-head spindle CL-832203-SA-S. Shipping weight 0.1 lbs.

Holding capacity: 100 lbs

CL-101-TC
High Open Arm, Flanged Base

Small-size clamp. Accepts any 1/4-20 spindle and (2) CL-147-TW flanged washers . . . see pages 78-82 to order. Shipping weight 0.3 lbs.

Holding capacity: 250 lbs

CL-201-TC
High Open Arm, Flanged Base

Medium-size clamp. Accepts any 5/16-18 spindle and (2) CL-51610-TW flanged washers . . . see pages 78-82 to order. Shipping weight 0.5 lbs.

Holding capacity: 625 lbs

CL-301-TC
High Open Arm, Flanged Base

Large-size clamp. Accepts any 3/8-16 spindle and (2) CL-3811-TW flanged washers . . . see pages 78-82 to order. Shipping weight 1.4 lbs.

Holding capacity: 850 lbs

CL-101-TC (Top dimension)
CL-201-TC (Middle dimension)
CL-301-TC (Bottom dimension)

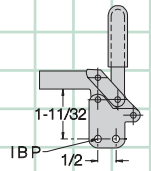

CL-102-TC
High Open Arm
Straight Base
250 lbs

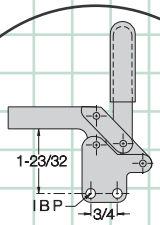

CL-202-TC
High Open Arm
Straight Base
625 lbs

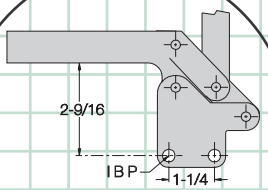

CL-302-TC
High Open Arm
Straight Base
850 lbs

CarrLane® MANUFACTURING CO.
4200 Carr Lane Ct., P.O. Box 191970
St. Louis, Missouri 63119-7970 USA
Phone: 314-647-6200, FAX: 314-647-5736
Web Site: www.carrlane.com

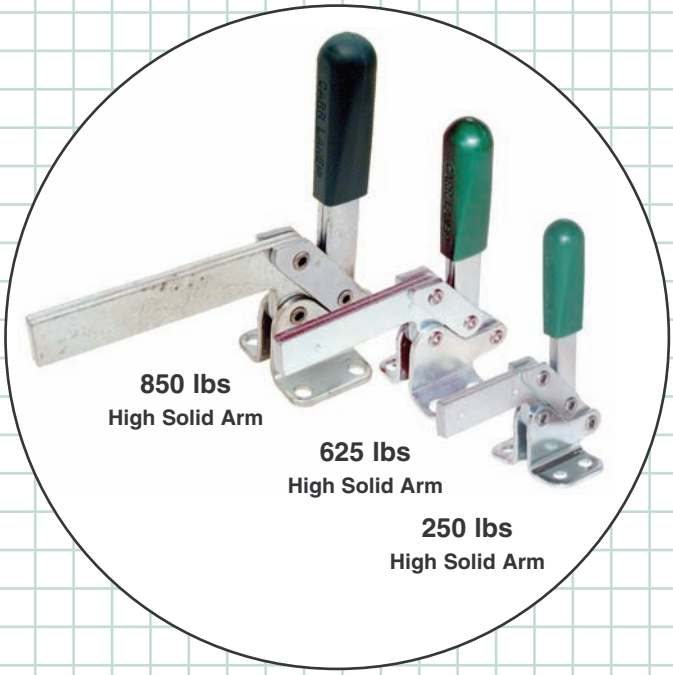

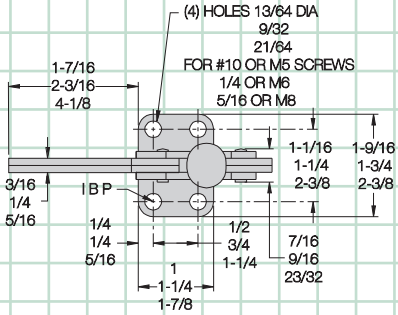

Simple, easy-opening clamps with extra arm height. Solid arm for weld-on bolt retainers (see p. 36 for open-arm version). Arm opens 83° while handle moves 83°. Available in three sizes.

CL-103-TC

High Solid Arm, Flanged Base

Small-size clamp. Accepts any 1/4-20 spindle and a CL-1458-S bolt retainer . . . see pages 78-82 to order. Shipping weight 0.3 lbs.

Holding capacity: 250 lbs

CL-203-TC

High Solid Arm, Flanged Base

Medium-size clamp. Accepts any 5/16-18 spindle and a CL-51658-S or CL-518000-BR bolt retainer . . . see pages 78-82 to order. Shipping weight 0.5 lbs.

Holding capacity: 625 lbs

CL-303-TC

High Solid Arm, Flanged Base

Large-size clamp. Accepts any 3/8-16 spindle and a CL-3878-S or CL-316000-BR bolt retainer . . . see pages 78-82 to order. Shipping weight 1.4 lbs.

Holding capacity: 850 lbs

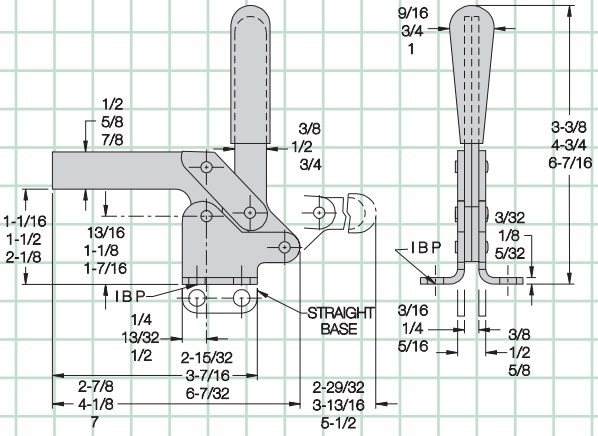

CL-103-TC (Top dimension)
CL-203-TC (Middle dimension)
CL-303-TC (Bottom dimension)

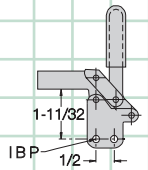

CL-104-TC
High Solid Arm
Straight Base
250 lbs

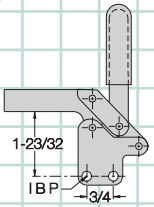

CL-204-TC
High Solid Arm
Straight Base
625 lbs

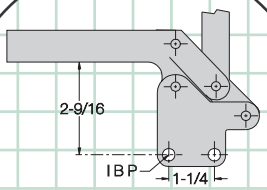

CL-304-TC
High Solid Arm
Straight Base
850 lbs

Carr Lane®
MANUFACTURING CO.
4200 Carr Lane Ct., P.O. Box 191970
St. Louis, Missouri 63119-7970 USA
Phone: 314-647-6200, FAX: 314-647-5736
Web Site: www.carrlane.com

VERTICAL HANDLE

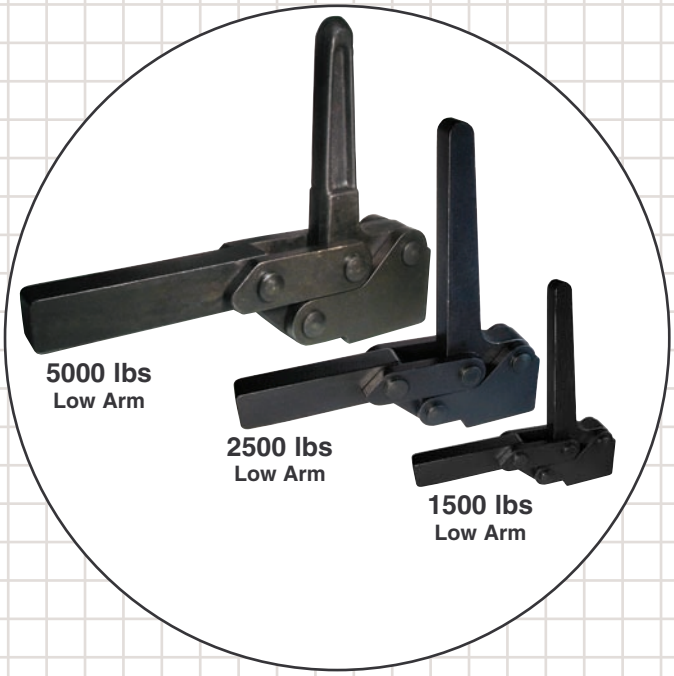

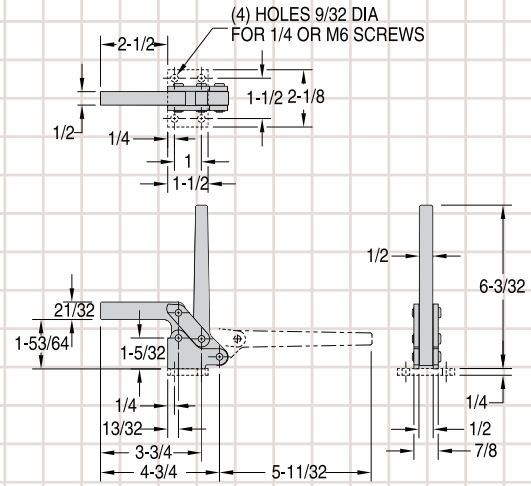

CL-45-HDC-121

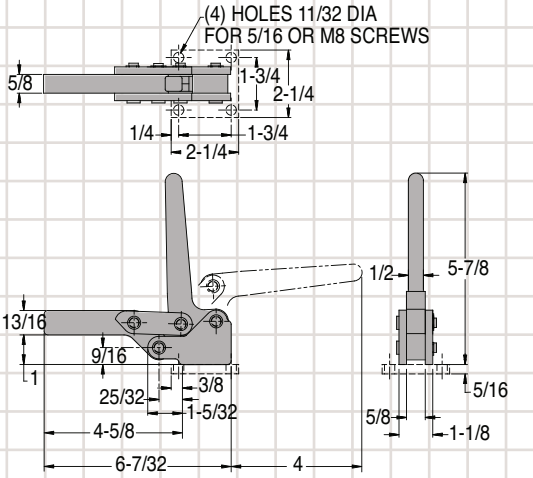

CL-50-HDC-121

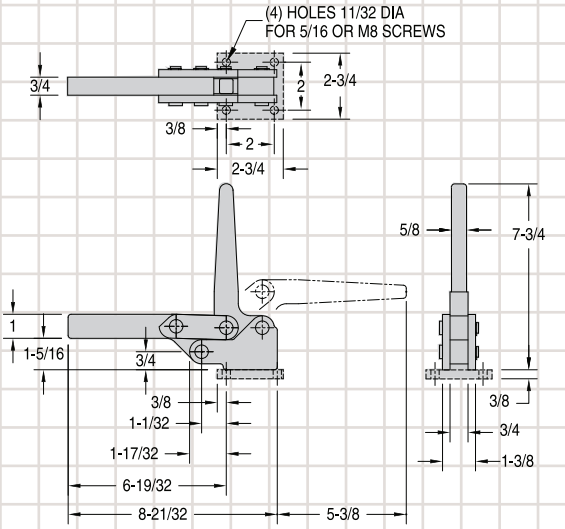

CL-51-HDC-121

Compact heavy-duty clamps with forged steel handles and clamping arms, available in three sizes. Low clamping arm extends far over workpiece. Also available with other arm/handle configurations . . . see pages 39 and 40. Simple, easy-opening linkage. Arm opens 83° while handle moves 83°. Weld-on flanged base is optional. To order clamp with flanged base attached, add "S" to part no. (example: CL-45-HDC-121S).

CL-45-HDC-121 NEW!

Low Arm

Smallest of the three sizes, yet still quite powerful. Shipping weight 2.0 lbs.

Holding capacity: **1500 lbs**

CL-50-HDC-121

Low Arm

Medium-size clamp with high strength. Shipping weight 2.5 lbs.

Holding capacity: **2500 lbs**

CL-51-HDC-121

Low Arm

Largest of the three sizes. Shipping weight 5.0 lbs.

Holding capacity: **5000 lbs**

Available with standard flanged base attached...

Add "S" to part no.

MANUFACTURING CO.
4200 Carr Lane Ct., P.O. Box 191970
St. Louis, Missouri 63119-7970 USA
Phone: 314-647-6200, FAX: 314-647-5736
Web Site: www.carrlane.com

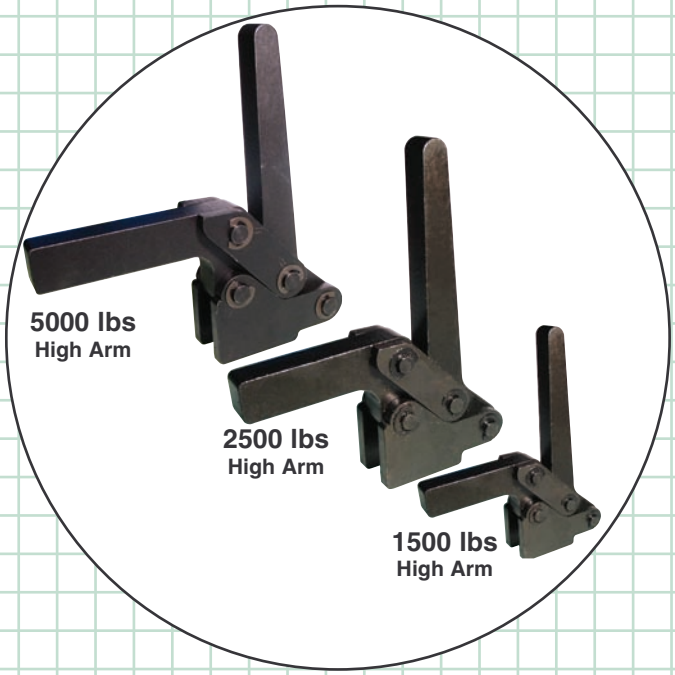

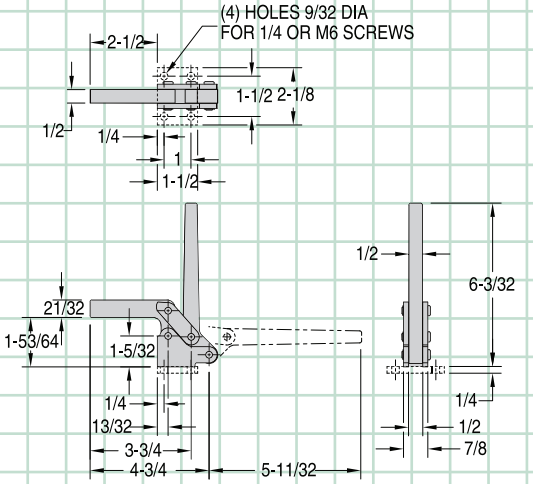

CL-40-HDC-211

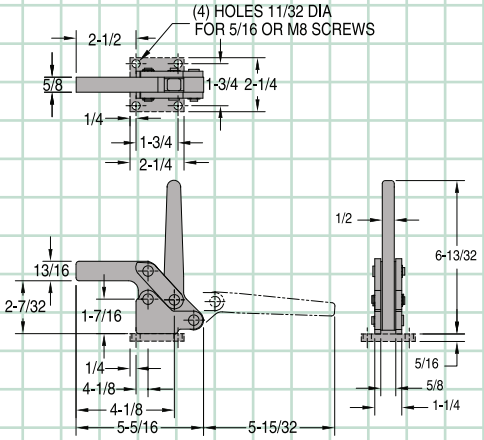

CL-60-HDC-211

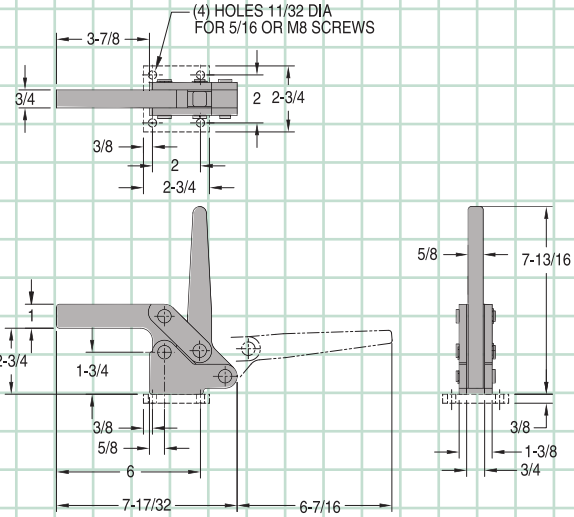

CL-61-HDC-211

Compact heavy-duty clamps with forged steel handles and clamping arms, available in three sizes. High clamping arm provides extra room for thick workpieces. Also available with other arm/handle configurations . . . see pages 38 and 40. Simple, easy-opening linkage. Arm opens 83° while handle moves 83°. Weld-on flanged base is optional. To order clamp with flanged base attached, add "S" to part no. (example: CL-40-HDC-211S).

CL-40-HDC-211 NEW!

High Arm

Smallest of the three sizes, yet still quite powerful. Shipping weight 2.0 lbs.

Holding capacity: **1500 lbs**

CL-60-HDC-211

High Arm

Medium-size clamp with high strength. Shipping weight 2.5 lbs.

Holding capacity: **2500 lbs**

CL-61-HDC-211

High Arm

Larger of the three sizes. Shipping weight 5.0 lbs.

Holding capacity: **5000 lbs**

Available with standard flanged base attached . . .

Add "S" to part no.

Also available air powered . .

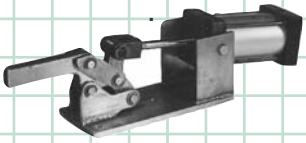

CL-3000-PTC (page 74)

Carr Lane MANUFACTURING CO.
4200 Carr Lane Ct., P.O. Box 191970
St. Louis, Missouri 63119-7970 USA
Phone: 314-647-6200, FAX: 314-647-5736
Web Site: www.carrlane.com

VERTICAL HANDLE

Custom heavy-duty forged clamps built to your specifications, with the same features as the clamps shown on pages 38 and 39. Available in three sizes. Choose from the 32 configurations shown below. (Top part no. is for 1500-lb clamp, middle part no. is for 2500-lb clamp, bottom part no. is for 5000-lb clamp). Simple, easy-opening linkage. Arm opens 83° while handle moves 83°. Weld-on flanged base is optional. To order clamp with flanged base attached, add "S" to part no. (example: CL-40-HDC-111S).

CL-40/45-HDC-XXX NEW!

Smallest of the three sizes, yet still quite powerful. Shipping weight 2.0 lbs.

Holding capacity: 1500 lbs

CL-50/60-HDC-XXX

Medium-size clamp with high strength. Shipping weight 2.5 lbs.

Holding capacity: 2500 lbs

CL-51/61-HDC-XXX

Largest of the three sizes. Shipping weight 5.0 lbs.

Holding capacity: 5000 lbs

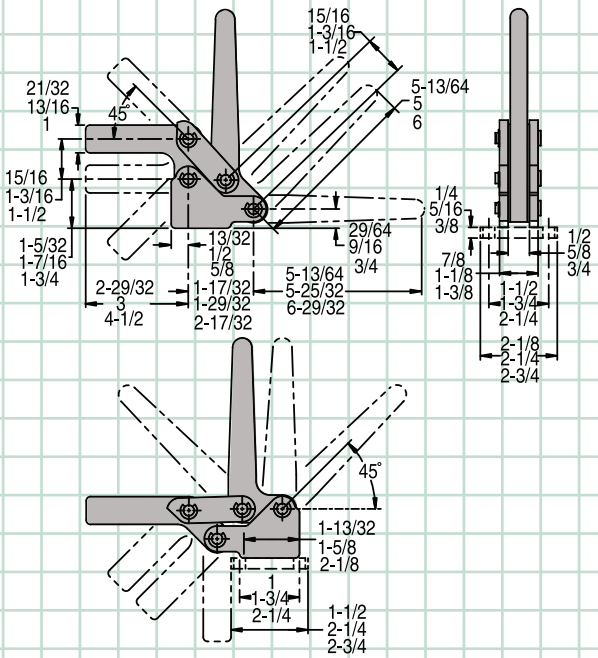

CL-40/45-HDC-XXX (Top dimension)
CL-50/60-HDC-XXX (Middle dimension)
CL-51/61-HDC-XXX (Bottom dimension)

Low Arm		High Arm	
CL-45-HDC-111 CL-50-HDC-111 CL-51-HDC-111	CL-45-HDC-311 CL-50-HDC-311 CL-51-HDC-311	CL-40-HDC-111 CL-60-HDC-111 CL-61-HDC-111	CL-40-HDC-311 CL-60-HDC-311 CL-61-HDC-311
CL-45-HDC-121 CL-50-HDC-121 CL-51-HDC-121	CL-45-HDC-321 CL-50-HDC-321 CL-51-HDC-321	CL-40-HDC-121 CL-60-HDC-121 CL-61-HDC-121	CL-40-HDC-321 CL-60-HDC-321 CL-61-HDC-321
CL-45-HDC-131 CL-50-HDC-131 CL-51-HDC-131	CL-45-HDC-331 CL-50-HDC-331 CL-51-HDC-331	CL-40-HDC-131 CL-60-HDC-131 CL-61-HDC-131	CL-40-HDC-331 CL-60-HDC-331 CL-61-HDC-331
CL-45-HDC-141 CL-50-HDC-141 CL-51-HDC-141	CL-45-HDC-341 CL-50-HDC-341 CL-51-HDC-341	CL-40-HDC-141 CL-60-HDC-141 CL-61-HDC-141	CL-40-HDC-341 CL-60-HDC-341 CL-61-HDC-341
CL-45-HDC-211 CL-50-HDC-211 CL-51-HDC-211	CL-45-HDC-411 CL-50-HDC-411 CL-51-HDC-411	CL-40-HDC-211 CL-60-HDC-211 CL-61-HDC-211	CL-40-HDC-411 CL-60-HDC-411 CL-61-HDC-411
CL-45-HDC-221 CL-50-HDC-221 CL-51-HDC-221	CL-45-HDC-421 CL-50-HDC-421 CL-51-HDC-421	CL-40-HDC-221 CL-60-HDC-221 CL-61-HDC-221	CL-40-HDC-421 CL-60-HDC-421 CL-61-HDC-421
CL-45-HDC-231 CL-50-HDC-231 CL-51-HDC-231	CL-45-HDC-431 CL-50-HDC-431 CL-51-HDC-431	CL-40-HDC-231 CL-60-HDC-231 CL-61-HDC-231	CL-40-HDC-431 CL-60-HDC-431 CL-61-HDC-431
CL-45-HDC-241 CL-50-HDC-241 CL-51-HDC-241	CL-45-HDC-441 CL-50-HDC-441 CL-51-HDC-441	CL-40-HDC-241 CL-60-HDC-241 CL-61-HDC-241	CL-40-HDC-441 CL-60-HDC-441 CL-61-HDC-441

Carr Lane MANUFACTURING CO.
4200 Carr Lane Ct., P.O. Box 191970
St. Louis, Missouri 63119-7970 USA
Phone: 314-647-6200, FAX: 314-647-5736
Web Site: www.carrlane.com

NOW ALSO AVAILABLE IN METRIC!

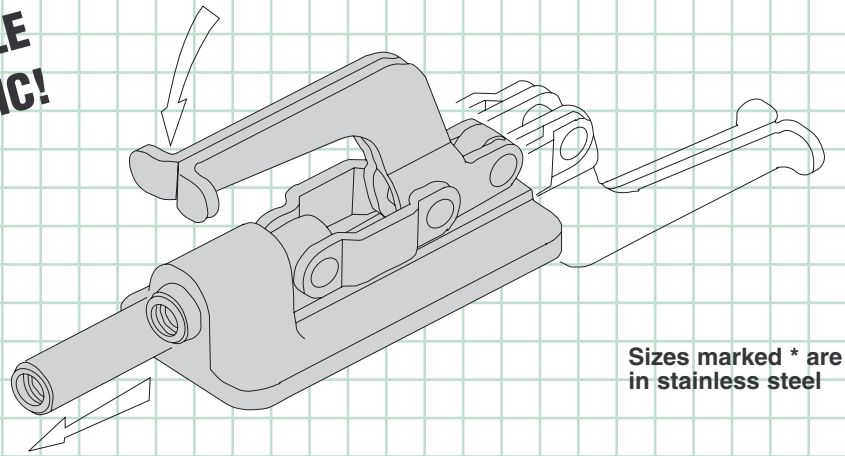

Sizes marked * are also available in stainless steel

All Carr Lane toggle clamps are DFARS and RoHS compliant.

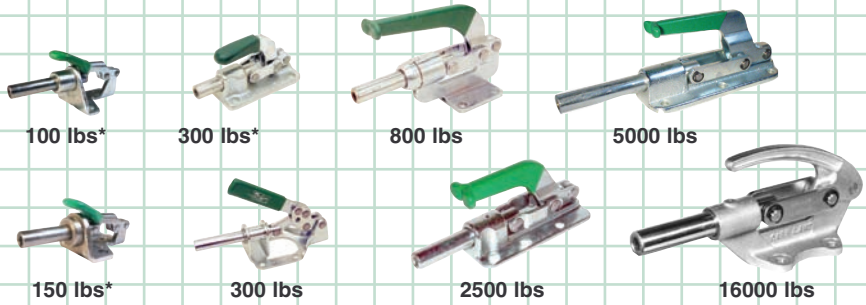

Standard SPC Design

p. 42-47

Most popular series of push/pull clamps. Plunger advances and locks by moving the handle forward toward it. Clamp can also be used for pulling instead of pushing (handle locks back in downward position also). Choice of seven sizes.

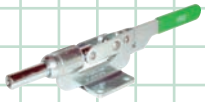

Horizontal Handle

p. 49

Reverse-action push clamp. Plunger advances and locks by moving the handle backward into horizontal position.

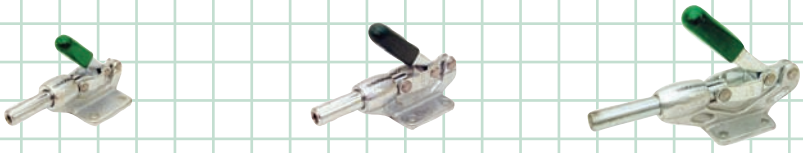

PC Design

pp. 50-51

Durable push/pull clamps with nodular iron bases. Plunger advances and locks by moving the handle forward toward it. Clamp can also be used for pulling instead of pushing (handle locks back in downward position also). Choice of three sizes.

Threaded Body

p. 52-53

Compact push/pull clamps for mounting through panels, plates, or angle brackets. Install in a drilled or tapped hole. Plunger locks in either extended or retracted position. Rotate clamp to position handle anywhere within 360°. Choice of three sizes.

Carr Lane MANUFACTURING CO.
4200 Carr Lane Ct., P.O. Box 191970
St. Louis, Missouri 63119-7970 USA
Phone: 314-647-6200, FAX: 314-647-5736
Web Site: www.carrlane.com

PUSH / PULL

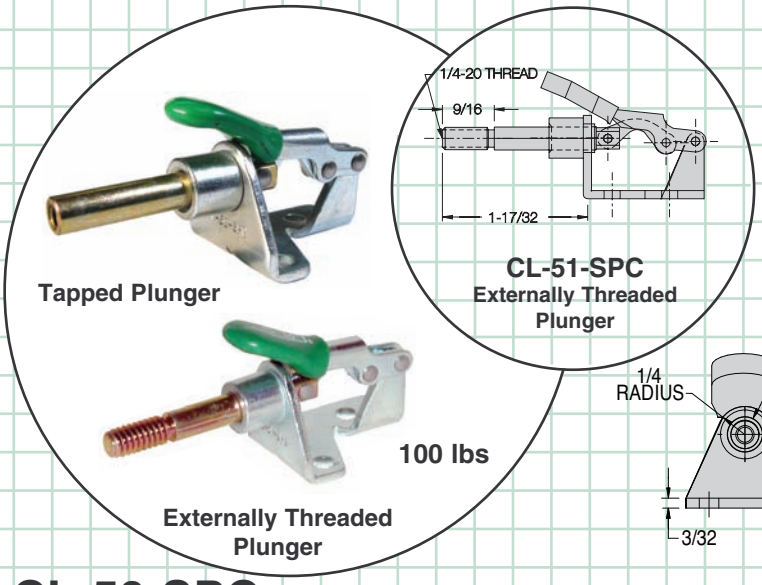

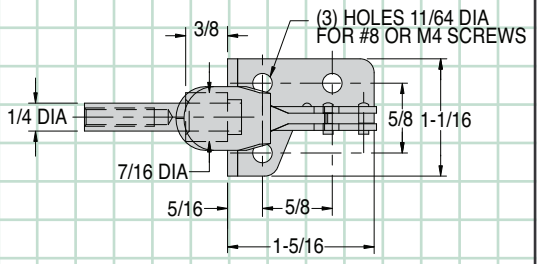

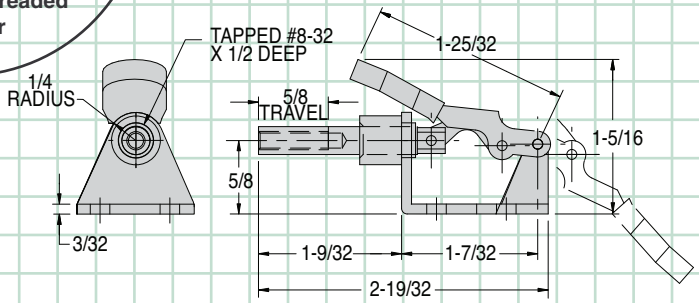

CL-50-SPC (Metric No. CLM-50-SPC)

Miniature plunger clamp, perfect for electronics fixturing and other light-duty applications. Locks in extended or retracted position. 5/8" plunger travel. Tapped-plunger version supplied with #8-32 nylon hex-head spindle CL-832203-SA (M4 in metric). Also available with 1/4-20 externally threaded plunger. Shipping weight 0.2 lbs.

Holding capacity: **100 lbs**

Also available in stainless steel . . .

CL-50-SPC-S

Also available air powered . . .

CL-600-PPC (page 73)

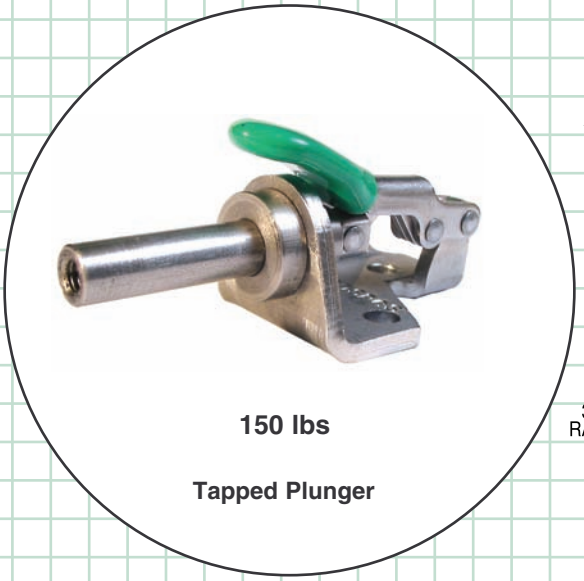

NEW!

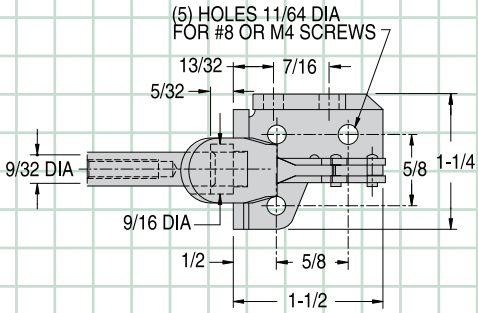

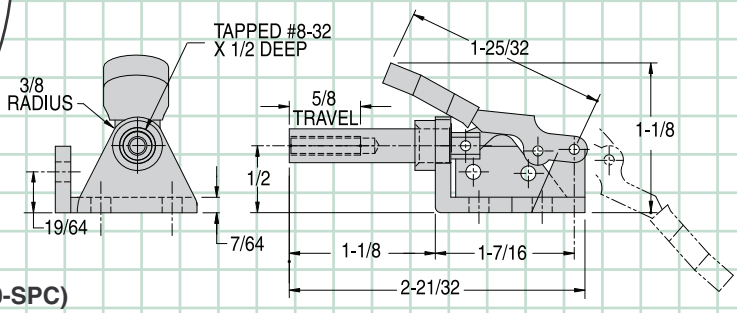

CL-60-SPC (Metric No. CLM-60-SPC)

Heavier-duty version of our smallest plunger clamp above. This is a powerful clamp in an extremely compact size. Unique base allows bottom or side mounting. Locks in extended or retracted position. 5/8" plunger travel. Plunger is tapped to accept any #8-32 spindle (M4 in metric) ... see pages 78-81 to order. Shipping weight 0.2 lbs.

Holding capacity: **150 lbs**

Also available in stainless steel . . .

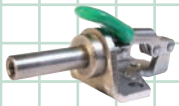

CL-60-SPC-S

Carr Lane MANUFACTURING CO.
4200 Carr Lane Ct., P.O. Box 191970
St. Louis, Missouri 63119-7970 USA
Phone: 314-647-6200, FAX: 314-647-5736
Web Site: www.carrlane.com

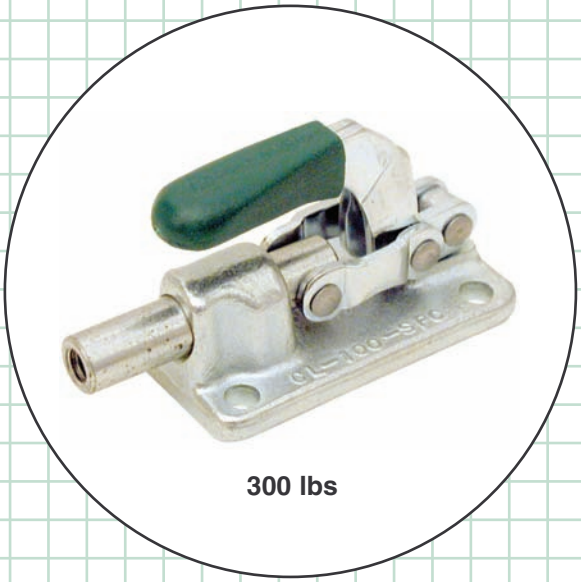

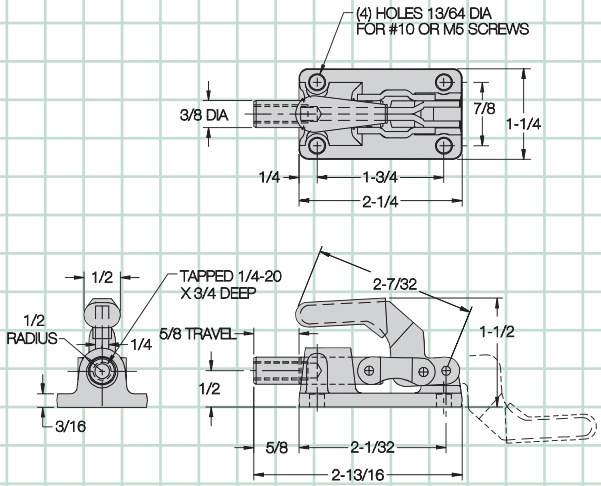

CL-100-SPC (Metric No. CLM-100-SPC)

Tiny, yet extremely powerful plunger clamp with a forged steel base. Requires very little mounting space due to its narrow base and compact low profile. Locks in extended or retracted position. 5/8" plunger travel. Plunger is tapped to accept any 1/4-20 spindle (M6 in metric) . . . see pages 78-81 to order. Shipping weight 0.5 lbs.

Holding capacity: **300 lbs**

Also available in stainless steel . . .

CL-100-SPC-S

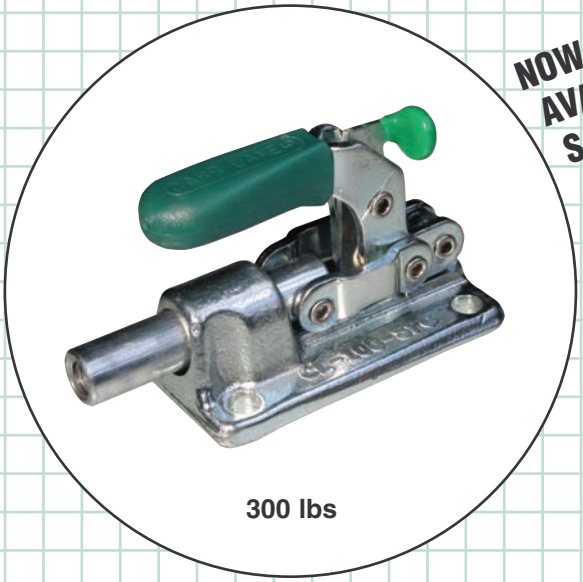

NOW ALSO AVAILABLE WITH SAFETY LOCK!

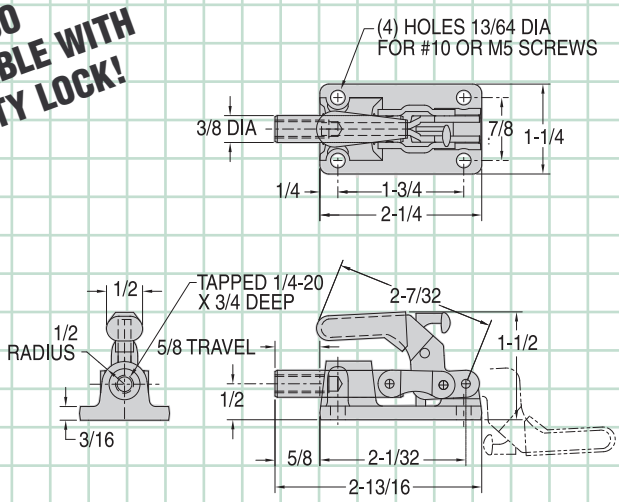

CL-100-LSPC (Metric No. CLM-100-LSPC)

Same as the toggle clamp shown above, except with our new safety-lock feature. This safety lock automatically engages when the clamp is closed, then remains locked until manually disengaged by pressing the lever before opening. This prevents the clamp from being accidentally opened by bumping the handle. Shipping weight 0.6 lbs.

Holding capacity: **300 lbs**

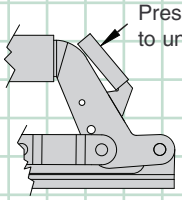

Also available in stainless steel . . .

CL-100-LSPC-S

Carr Lane®
MANUFACTURING CO.
4200 Carr Lane Ct., P.O. Box 191970
St. Louis, Missouri 63119-7970 USA
Phone: 314-647-6200, FAX: 314-647-5736
Web Site: www.carrlane.com

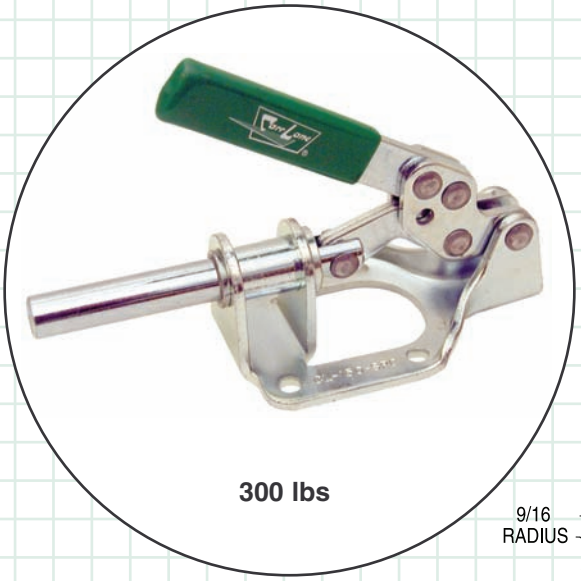

300 lbs

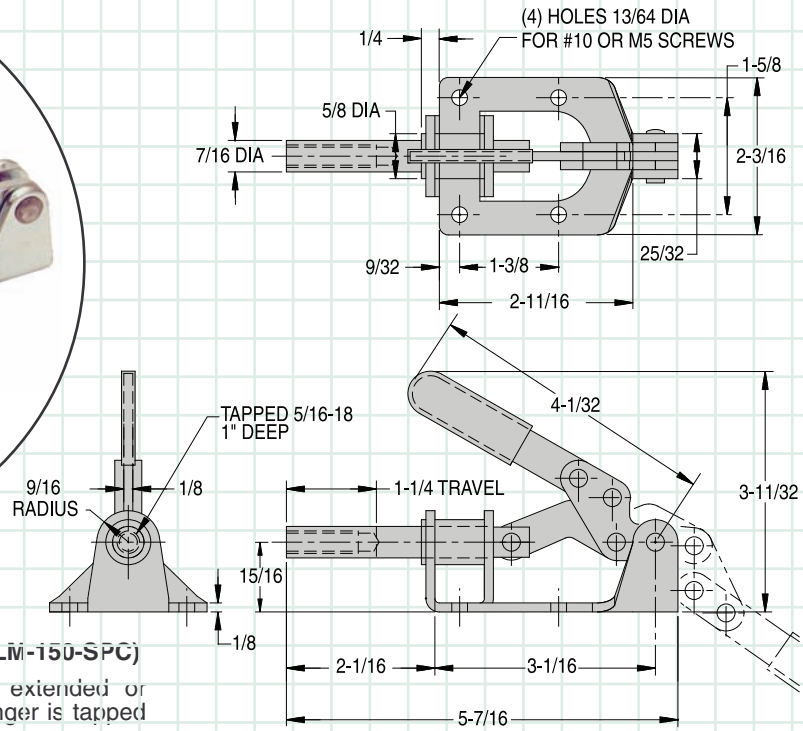

CL-150-SPC (Metric No. CLM-150-SPC)

Medium-size plunger clamp that locks in extended or retracted position. 1-1/4" plunger travel. Plunger is tapped to accept any 5/16-18 spindle (M8 in metric) ... see pages 78-81 to order. Shipping weight 0.7 lbs.

Holding capacity: 300 lbs

"My best friend is the one

who brings out the best in me."

Henry Ford

Carr Lane MANUFACTURING CO.
4200 Carr Lane Ct., P.O. Box 191970
St. Louis, Missouri 63119-7970 USA
Phone: 314-647-6200, FAX: 314-647-5736
Web Site: www.carrlane.com

(Rev. 11/09)

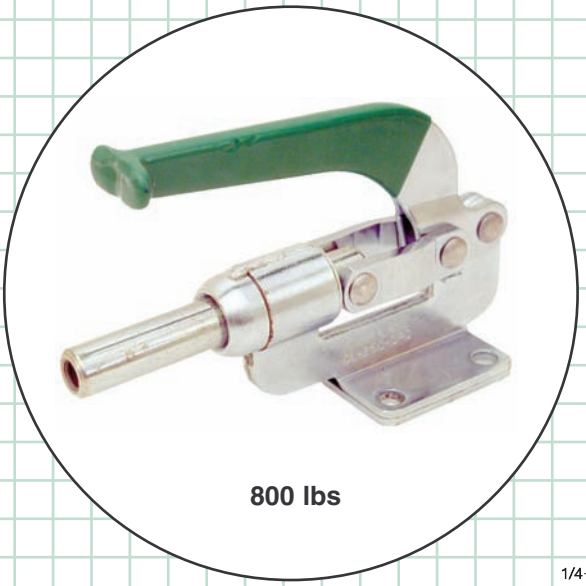

800 lbs

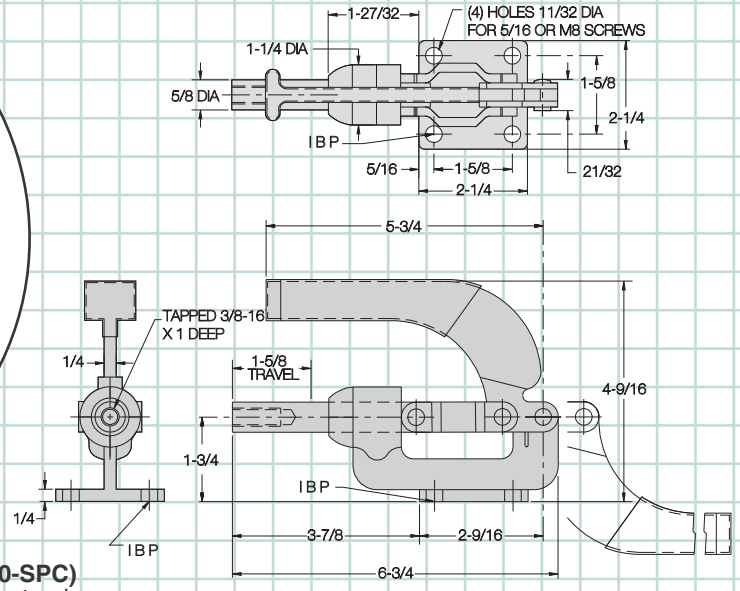

CL-250-SPC (Metric No. CLM-250-SPC)

Heavier clamp with extra plunger height. Locks in extended or retracted position. 1-5/8" plunger travel. Plunger is tapped to accept any 3/8-16 spindle (M10 in metric) . . . see pages 78-81 to order. Shipping weight 1.9 lbs.

Holding capacity: **800 lbs**

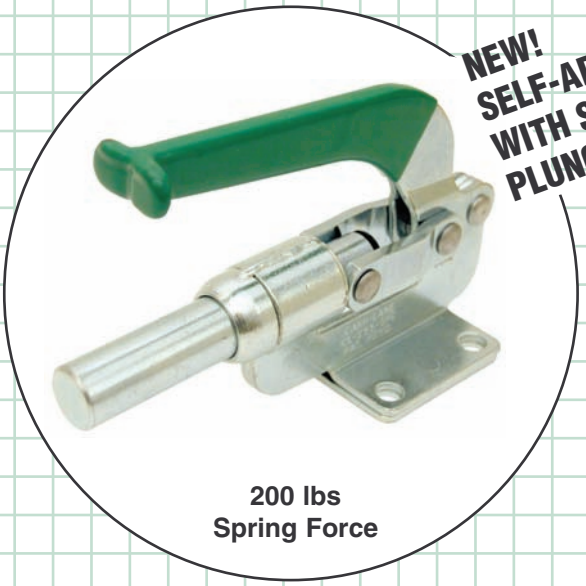

NEW! SELF-ADJUSTING WITH SPRING-LOADED PLUNGER!

200 lbs
Spring Force

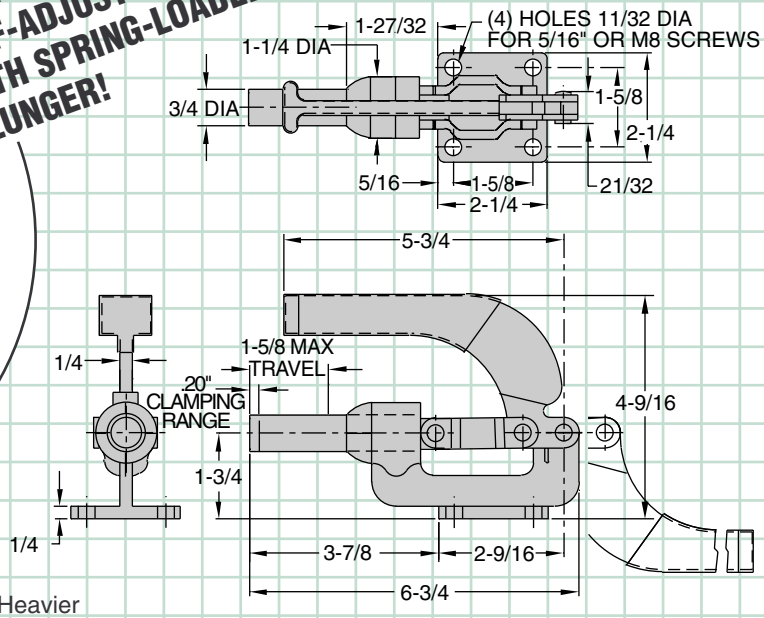

CL-255-SPC

Spring-loaded version of CL-250-SPC above. Heavier clamp with extra plunger height. Locks in extended position only. 1-5/8" maximum plunger travel with a .20" clamping range. Patent number 6,905,116. Shipping weight 1.9 lbs.

Spring force (±10%): **200 lbs**

Carr Lane®
MANUFACTURING CO.
4200 Carr Lane Ct., P.O. Box 191970
St. Louis, Missouri 63119-7970 USA
Phone: 314-647-6200, FAX: 314-647-5736
Web Site: www.carrlane.com

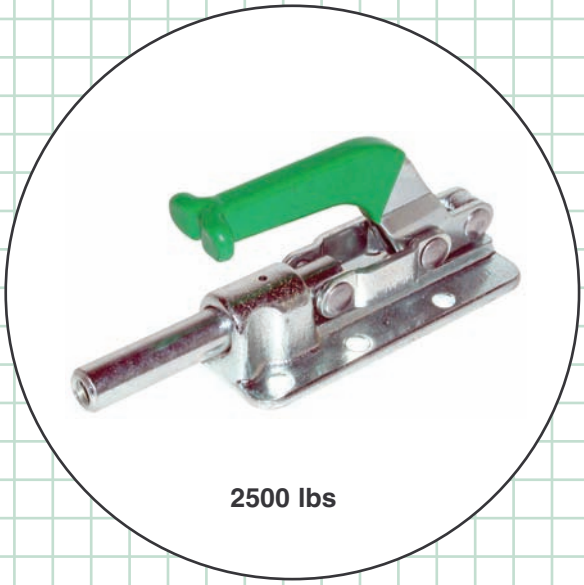

2500 lbs

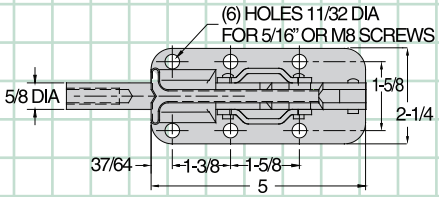

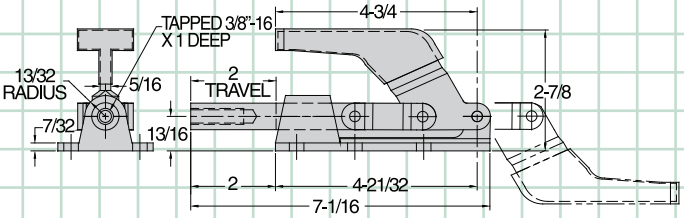

CL-350-SPC (Metric No. CLM-350-SPC)

Compact heavy-duty plunger clamp with an extremely low profile. Rugged forged steel base. Locks in extended or retracted position. 2" plunger travel. Plunger is tapped to accept any 3/8-16 spindle (M10 in metric) . . . see pages 78-81 to order. Shipping weight 2.0 lbs.

Holding capacity: **2500 lbs**

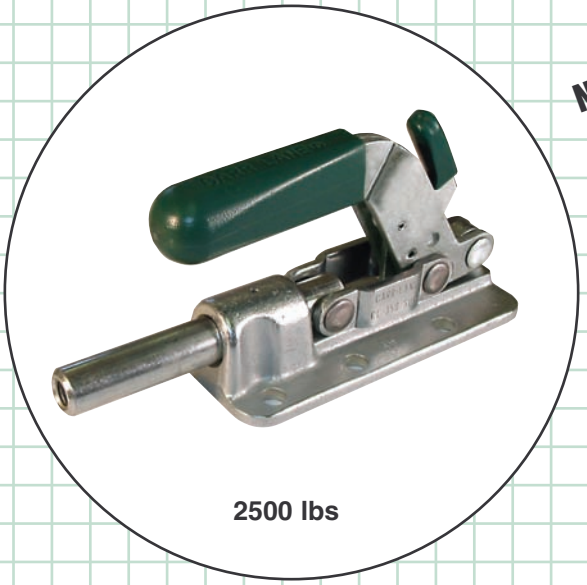

2500 lbs

NOW ALSO AVAILABLE WITH SAFETY LOCK!

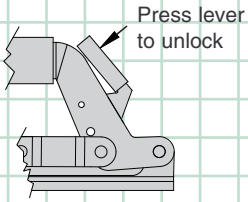

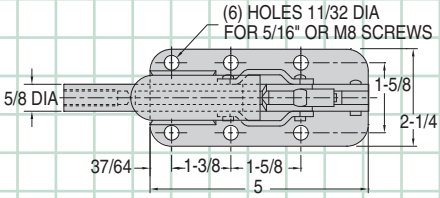

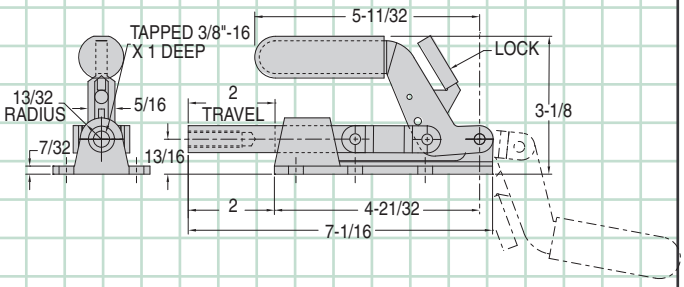

CL-350-LSPC With Safety Lock

Same as the toggle clamp shown above, except with our new safety-lock feature. This safety lock automatically engages when the clamp is closed, then remains locked until manually disengaged by pressing the lever before opening. This prevents the clamp from being accidentally opened by bumping the handle. Shipping weight 2.0 lbs.

Holding capacity: **2500 lbs**

Carr Lane MANUFACTURING CO.
4200 Carr Lane Ct., P.O. Box 191970
St. Louis, Missouri 63119-7970 USA
Phone: 314-647-6200, FAX: 314-647-5736
Web Site: www.carrlane.com

(Rev. 11/09)

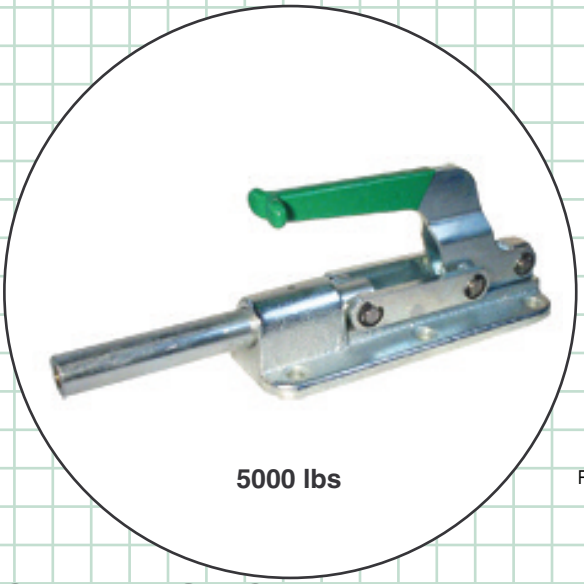

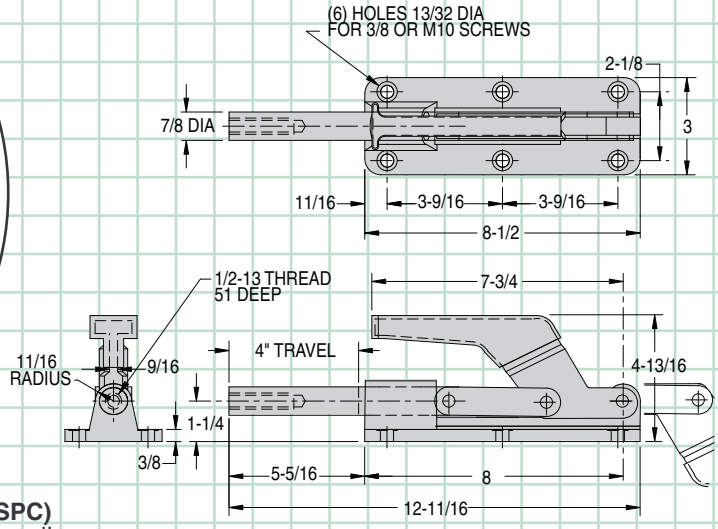

CL-450-SPC (Metric No. CLM-450-SPC)

Extra-heavy-duty clamp features a full 4" plunger travel! Rugged nodular iron base and a 7/8"-diameter plunger combine to handle the toughest clamping jobs. Locks in extended or retracted position. Plunger is tapped to accept any 1/2-13 spindle (M12 in metric) . . . see pages 78-81 to order. Shipping weight 7.0 lbs.

Holding capacity: 5000 lbs

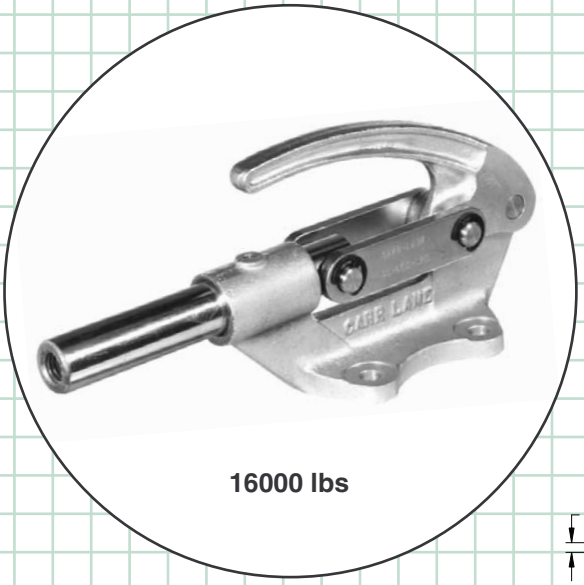

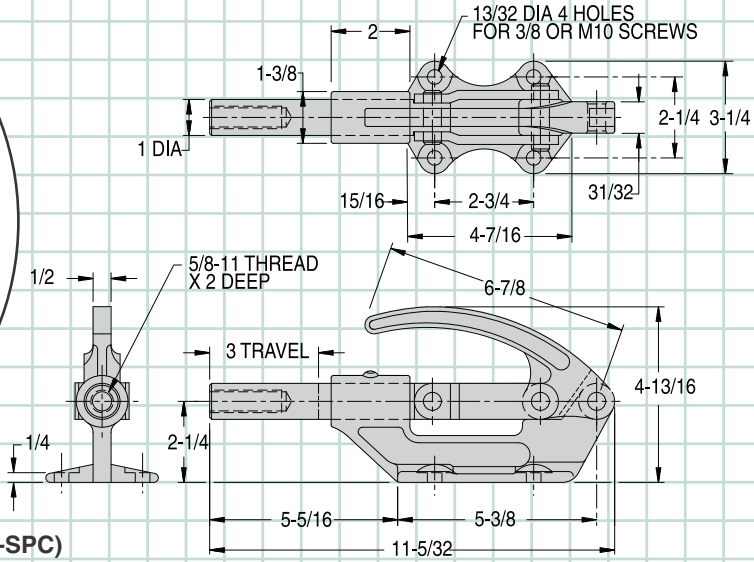

CL-650-SPC (Metric No. CLM-650-SPC)

Strongest plunger clamp available. Handle and base are made of alloy steel. Precision unit with snap-ring pivot pins to allow removing the plunger even after the clamp is mounted. Locks in extended or retracted position. 3" plunger travel. Plunger is tapped to accept any 5/8-11 spindle (M16 in metric). . . see pages 78-81 to order. Shipping weight 5.7 lbs.

Holding capacity: 16000 lbs

Carr Lane®
MANUFACTURING CO.
4200 Carr Lane Ct., P.O. Box 191970
St. Louis, Missouri 63119-7970 USA
Phone: 314-647-6200, FAX: 314-647-5736
Web Site: www.carrlane.com

Toggle Clamps with Safety Locks. Carr Lane has introduced a variety of new toggle clamps with optional safety locks, including latch-action, vertical-handle, horizontal-handle, and push/pull types. All Carr Lane toggle clamps have a comfortable handle grip, in steel or optional stainless.

Carr Lane Mfg. Co., www.carrlane.com

Quick Release Pins. Carr Lane pins come with L, T, button or ring handles. Choose from ball lock pins, lifting pins, detent pins, or the ball lock mounting clamp. Many sizes available.

Carr Lane Mfg. Co., www.carrlane.com

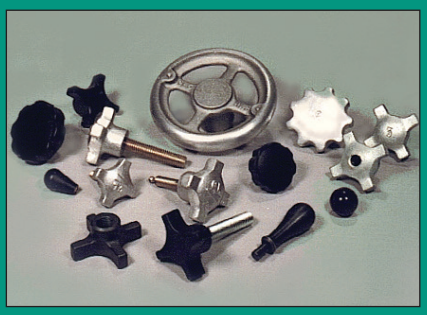

Knobs, Handles, Hand Wheels. Need to take hold? A variety of knobs, handles and hand wheels, in metal or plastic, are available from Carr Lane. Many new items.

Carr Lane Mfg. Co., www.carrlane.com

Large to Small...

Lift Your Load Safely With Carr Lane Hoist Rings

NEW! Extra-large Swivel Hoist Rings with our patented EZ-Torque™ system that allows tightening several smaller bolt heads with a standard torque wrench instead of tightening one large bolt with a special tool. Swivel Hoist Rings pivot 180 degrees and swivel 360 degrees simultaneously to allow lifting from any direction.

From large to small, in dozens of types, Carr Lane has the hoist ring for your application.

Carr Lane's lot number marking guarantees quality by providing traceability for:

- *Date of manufacture*
- *Material certification*
- *Magnaflux testing certification*
- *Heat treatment certification*

Pivoting hoist rings, swivel hoist rings, side-pull swivel hoist rings and lifting eyes are some of the types offered by Carr Lane, ranging from low profile versions to heavy-duty, extra-large types with load capacities up to 250,000 lbs.

Visit CarrLane.com and search our online catalog for hoist rings and any of our 100,000 other products.

ISO 9001-2008 CERTIFIED

MANUFACTURING CO.
4200 Carr Lane Ct., P.O. Box 191970
St. Louis, Missouri 63119-7970
Phone: 314-647-6200, FAX: 314-647-5736
Web Site: www.carrlane.com

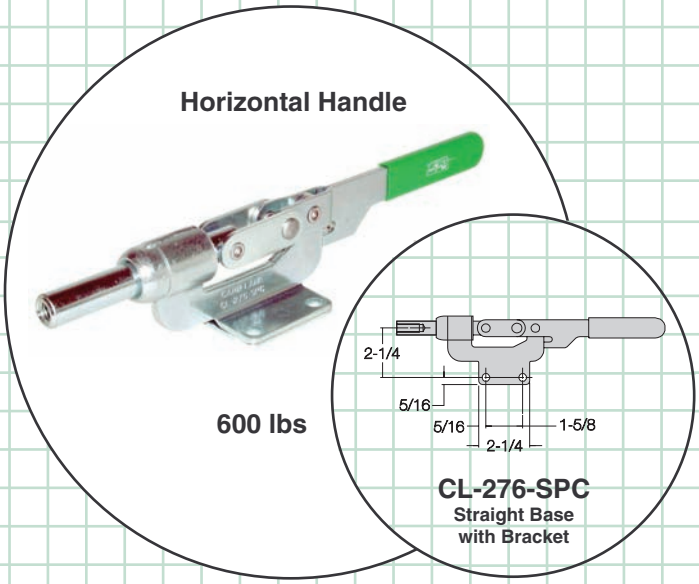

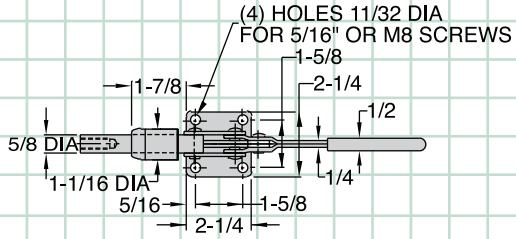

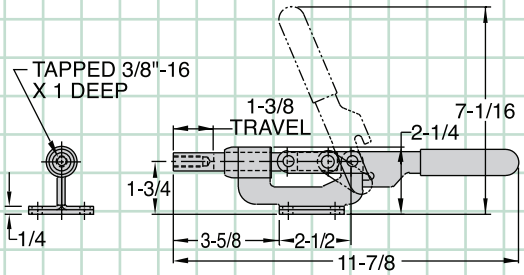

CL-275-SPC (Metric No. CLM-275-SPC)

Similar to CL-250-SPC except with reverse handle action. Plunger advances and locks by moving handle backward into horizontal position. 1-3/16" plunger travel. Plunger is tapped to accept any 3/8-16 spindle (M10 in metric) . . . see pages 78-81 to order. Straight-base version supplied with separate base bracket to allow mounting clamp at an angle. Shipping weight 1.5 lbs.

Holding capacity: **600 lbs**

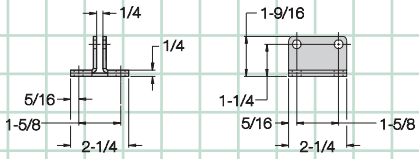

Bracket included with CL-276-SPC

NEW! SELF-ADJUSTING WITH SPRING-LOADED PLUNGER!

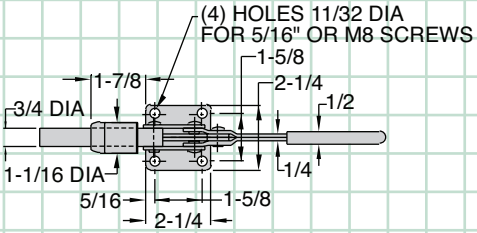

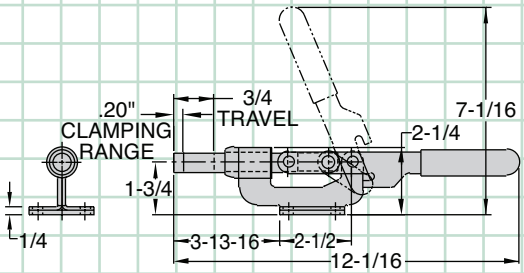

CL-285-SPC

Spring-loaded version of CL-275-SPC above. Plunger advances and locks by moving handle backward into horizontal position. 3/4" maximum plunger travel with a .20" clamping range. Patent number 6,905,116. Shipping weight 1.5 lbs.

Spring force (±10%): **200 lbs**

Carr Lane MANUFACTURING CO.
4200 Carr Lane Ct., P.O. Box 191970
St. Louis, Missouri 63119-7970 USA
Phone: 314-647-6200, FAX: 314-647-5736
Web Site: www.carrlane.com

PUSH / PULL

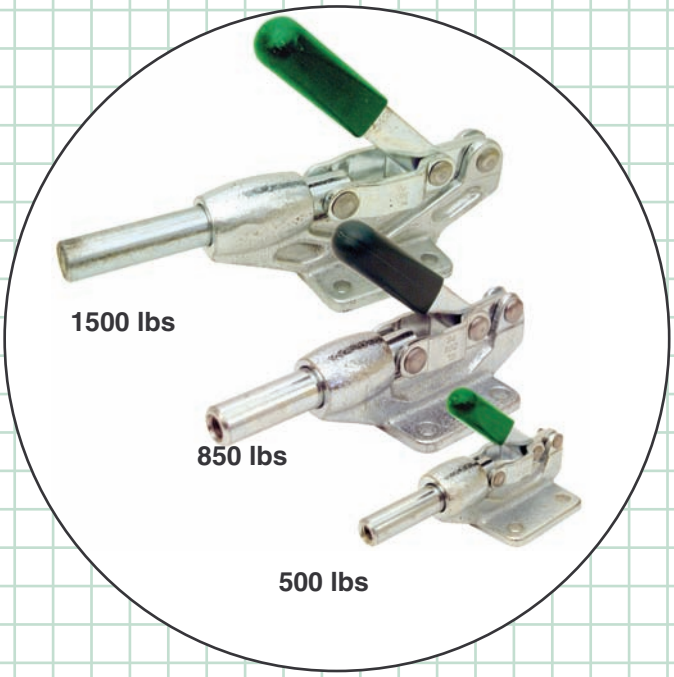

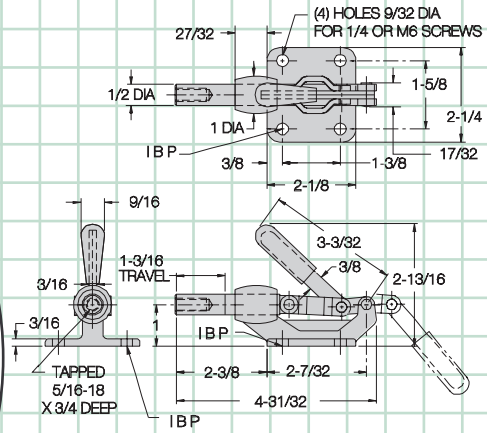

CL-100-PC

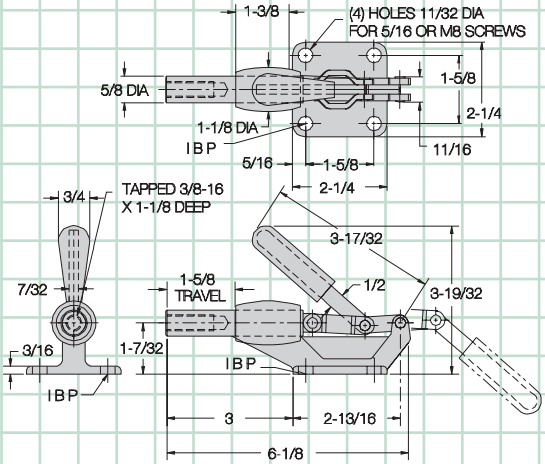

CL-200-PC

Durable plunger clamp with nodular iron base. Locks in either extended or retracted position. Choice of three sizes.

CL-100-PC (Metric No. CLM-100-PC)

Small-size clamp with 1-3/16" plunger travel. Accepts any 5/16-18 spindle (M8 in metric). . . see pages 78-81 to order. Shipping weight 0.9 lbs.

Holding capacity: 500 lbs

CL-200-PC (Metric No. CLM-200-PC)

Medium-size clamp with 1-5/8" plunger travel. Accepts any 3/8-16 spindle (M10 in metric). . . see pages 78-81 to order. Shipping weight 1.4 lbs.

Holding capacity: 850 lbs

CL-300-PC (Metric No. CLM-300-PC)

Large-size clamp with 2-11/32" plunger travel. Accepts any 1/2-13 spindle (M12 in metric). . . see pages 78-81 to order. Shipping weight 3.2 lbs.

Holding capacity: 1500 lbs

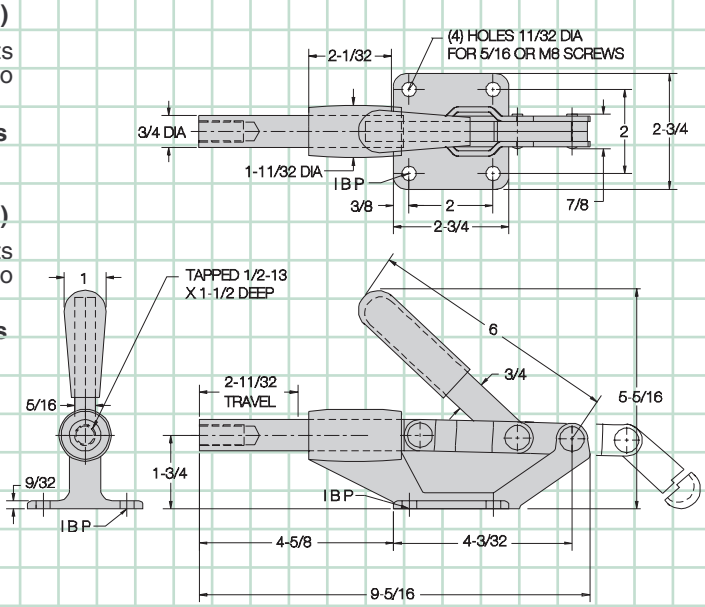

CL-300-PC

Also available air powered . . .

CL-1500-PPC
850 lbs
(page 76)

MANUFACTURING CO.
4200 Carr Lane Ct., P.O. Box 191970
St. Louis, Missouri 63119-7970 USA
Phone: 314-647-6200, FAX: 314-647-5736
Web Site: www.carrlane.com

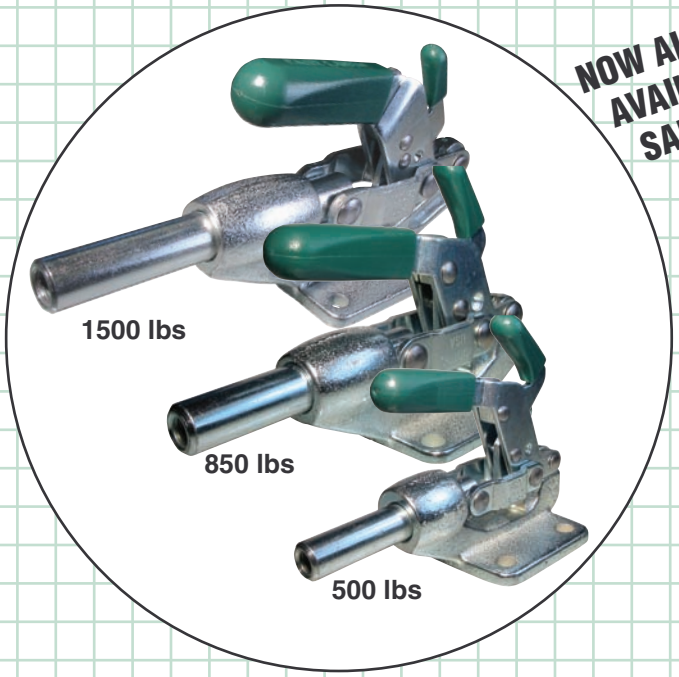

NOW ALSO AVAILABLE WITH SAFETY LOCK!

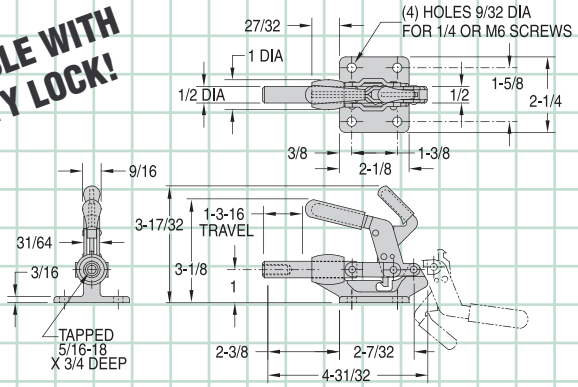

CL-100-LPC

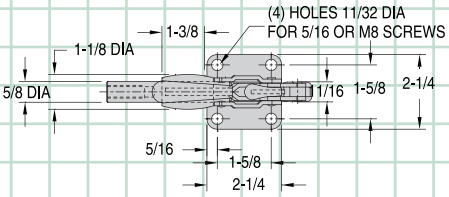

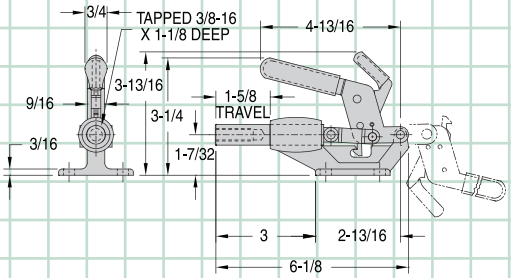

CL-200-LPC

Same as the toggle clamps shown on opposite page 50, except with our new safety-lock feature. This safety lock automatically engages when the clamp is closed, then remains locked until manually disengaged by pressing the lever before opening. This prevents the clamp from being accidentally opened by bumping the handle.

Durable plunger clamp with nodular iron base. Locks in extended or retracted position (safety lock functions only in extended position). Choice of three sizes.

CL-100-LPC

Small-size clamp with 1-3/16" plunger travel. Accepts any 5/16-18 spindle . . .see pages 78-81 to order. Shipping weight 0.9 lbs.

Holding Capacity: **500 lbs**

CL-200-LPC

Medium-size clamp with 1-5/8" plunger travel. Accepts any 3/8-16 spindle . . .see pages 78-81 to order. Shipping weight 1.4 lbs.

Holding Capacity: **850 lbs**

CL-300-LPC

Large-size clamp with 2-11/32" plunger travel. Accepts any 1/2-13 spindle . . .see pages 78-81 to order. Shipping weight 3.2 lbs.

Holding Capacity: **1500 lbs**

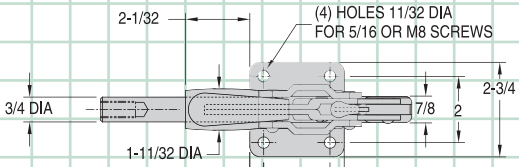

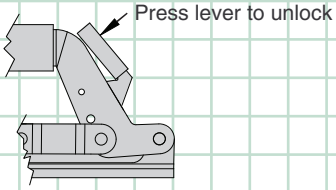

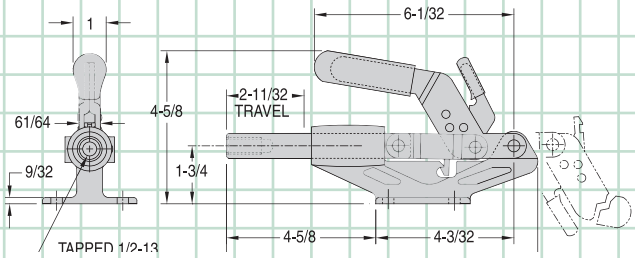

CL-300-LPC

Carr Lane MANUFACTURING CO.
4200 Carr Lane Ct., P.O. Box 191970
St. Louis, Missouri 63119-7970 USA
Phone: 314-647-6200, FAX: 314-647-5736
Web Site: www.carrlane.com

PUSH / PULL

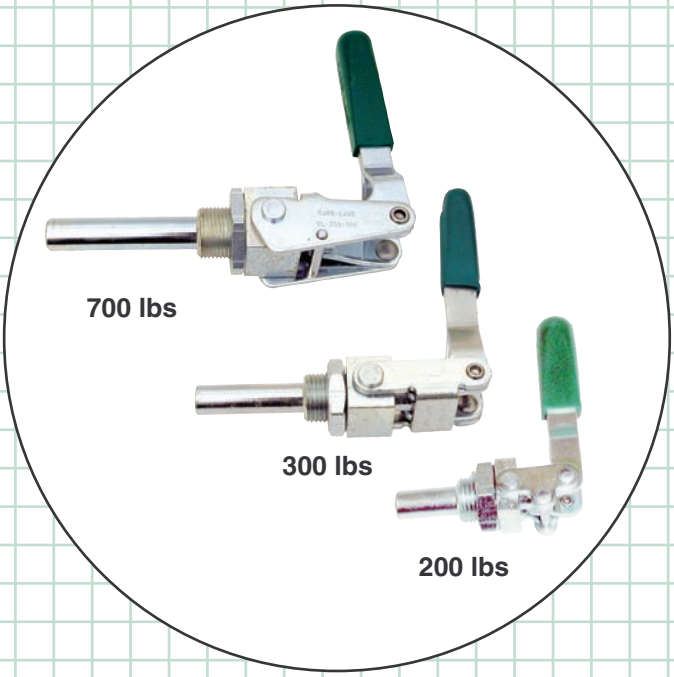

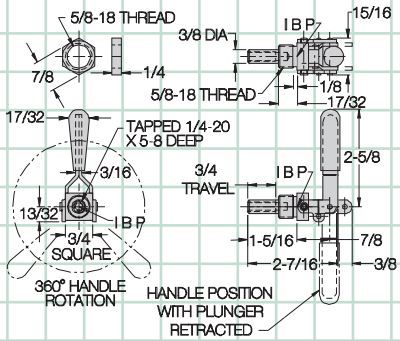

CL-150-TPC

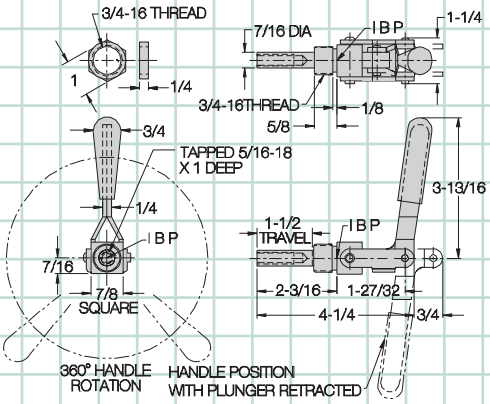

CL-250-TPC

Compact plunger clamps for mounting through panels, plates, or angle brackets. Install in a drilled or tapped hole, securing with the locknut provided. Plunger locks in either extended or retracted position. Rotate clamp to position handle anywhere within 360°. Choice of three sizes.

CL-150-TPC (Metric No. CLM-150-TPC)

Small-size clamp with 3/4" plunger travel. Installs in a 5/8"-diameter drilled hole, or a 5/8-18 tapped hole (M16x1.5 in metric). Accepts any 1/4-20 spindle (M6 in metric). . . see pages 78-81 to order. Shipping weight 0.4 lbs.

Holding capacity: 200 lbs

CL-250-TPC (Metric No. CLM-250-TPC)

Medium-size clamp with 1-1/2" plunger travel. Installs in a 3/4"-diameter drilled hole, or a 3/4-16 tapped hole (M20x1.5 in metric). Accepts any 5/16-18 spindle (M8 in metric). . . see pages 78-81 to order. Shipping weight 0.7 lbs.

Holding capacity: 300 lbs

CL-350-TPC (Metric No. CLM-350-TPC)

Large-size clamp with 2-5/8" plunger travel. Installs in a 1"-diameter drilled hole, or a 1"-14 (M27x2 in metric) tapped hole. Accepts any 3/8-16 spindle (M10 in metric). . . see pages 78-81 to order. Shipping weight 1.5 lbs.

Holding capacity: 700 lbs

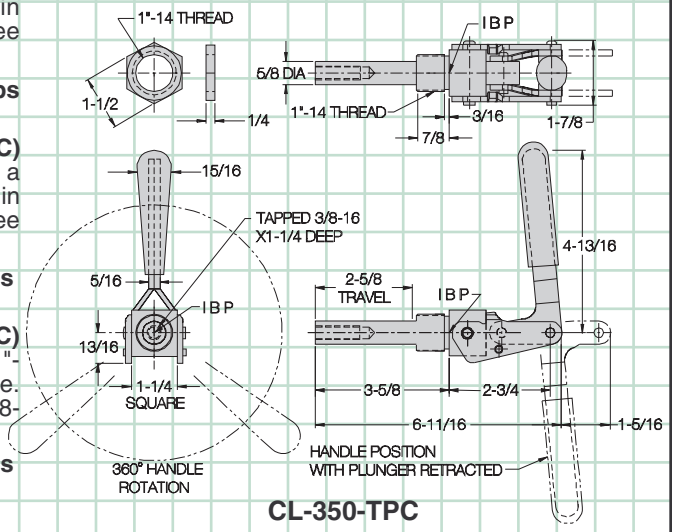

CL-350-TPC

Mounting Bracket for CL-250-TPC . . .

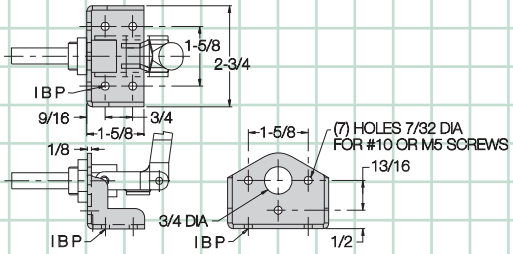

CL-250-TPCA

Also available in stainless steel . . .

CL-150-TPC-S
200 lbs

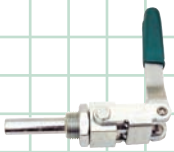

CL-250-TPC-S
300 lbs

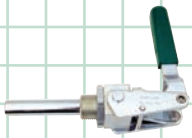

CL-350-TPC-S
700 lbs

Carr Lane MANUFACTURING CO.
4200 Carr Lane Ct., P.O. Box 191970
St. Louis, Missouri 63119-7970 USA
Phone: 314-647-6200, FAX: 314-647-5736
Web Site: www.carrlane.com

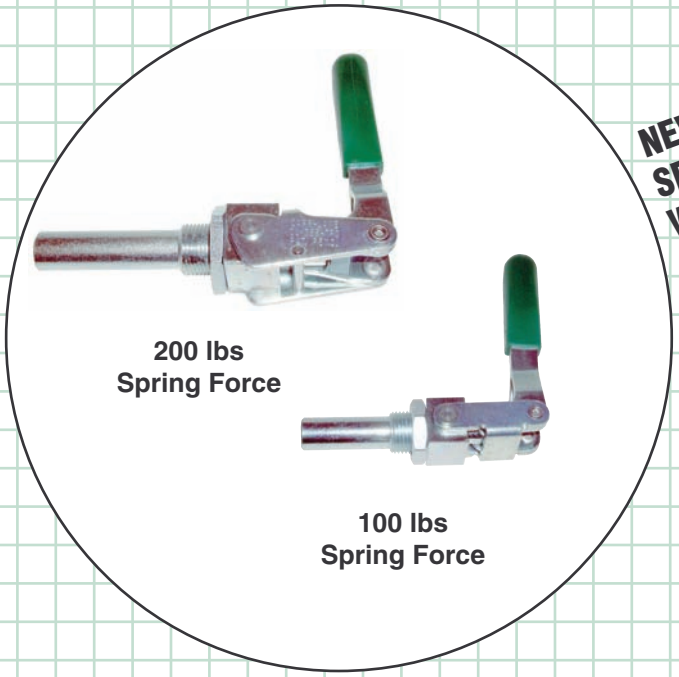

NEW! SELF-ADJUSTING WITH SPRING-LOADED PLUNGER!

Compact plunger clamps for mounting through panels, plates, or angle brackets. Install in a drilled or tapped hole, securing with the locknut provided. Plunger locks only in extended position. Rotate clamp to position handle anywhere within 360°. Patent number 6,905,116. Choice of two sizes.

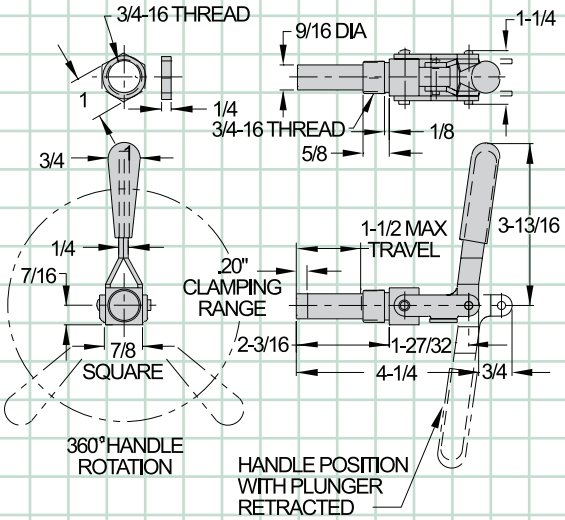

CL-255-TPC

CL-255-TPC

Medium-size clamp with 1-1/2" maximum plunger travel and a .20" clamping range. Installs in a 3/4"-diameter drilled hole, or a 3/4-16 tapped hole. Shipping weight 0.7 lbs.

Spring force (±10%): **100 lbs**

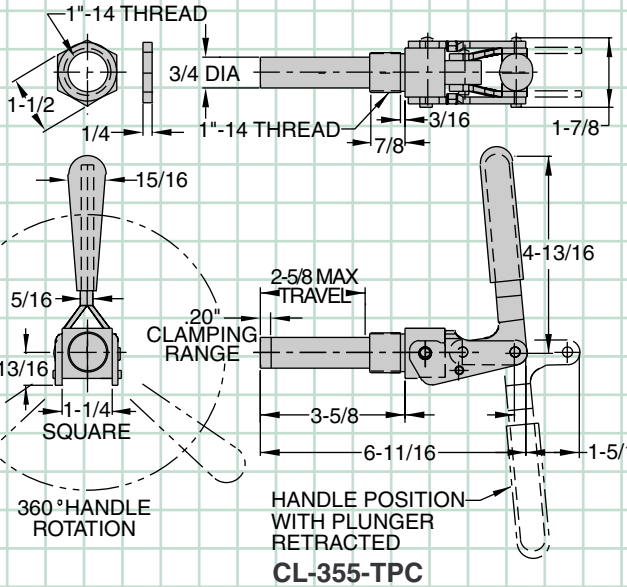

CL-355-TPC

CL-355-TPC

Large-size clamp with 2-5/8" maximum plunger travel and a .20" clamping range. Installs in a 1"-diameter drilled hole, or a 1"-14 tapped hole. Shipping weight 1.5 lbs.

Spring force (±10%): **200 lbs**

Mounting Bracket for CL-255-TPC . . .

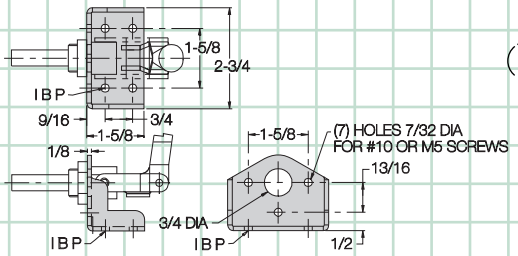

CL-250-TPCA

Carr Lane MANUFACTURING CO.
4200 Carr Lane Ct., P.O. Box 191970
St. Louis, Missouri 63119-7970 USA
Phone: 314-647-6200, FAX: 314-647-5736
Web Site: www.carrlane.com

TOGGLE EDGE CLAMPS

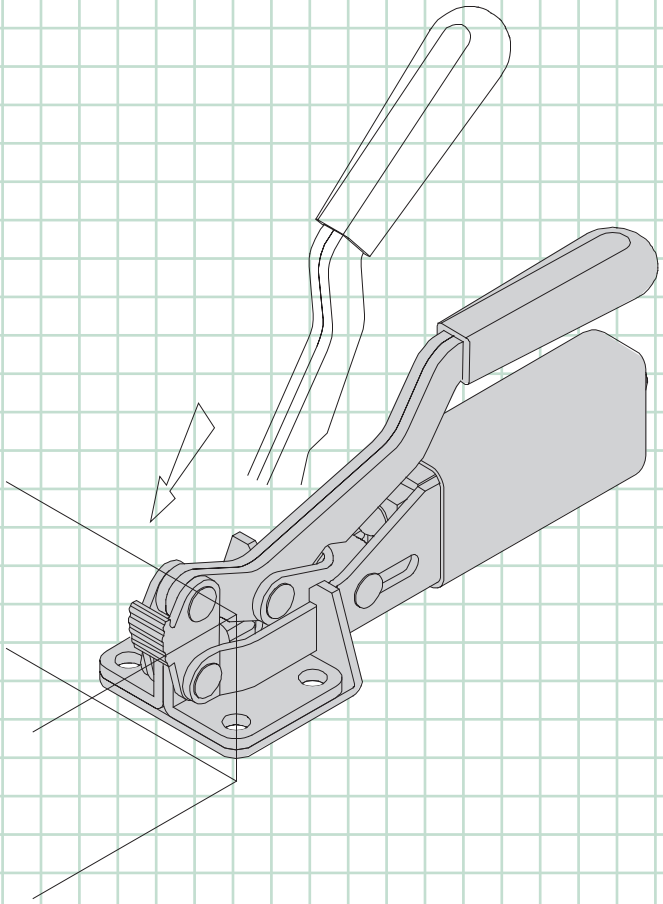

All Carr Lane toggle clamps are DFARS and RoHS compliant.

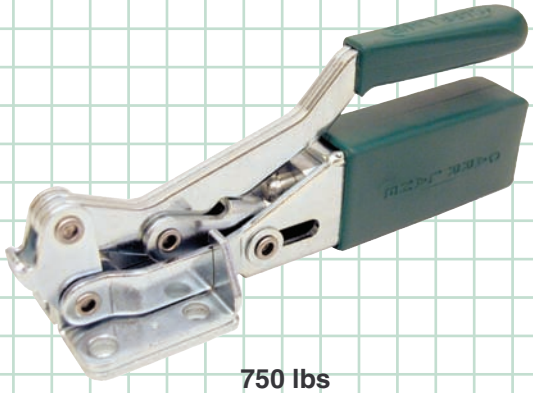

750 lbs

Automatically Adjusting
p. 55

Unique Toggle Edge Clamp applies force forward and downward at the same time. This quick-acting, self-adjusting clamp automatically compensates for variations in workpiece size. Clamping force is always consistent after setting once.

MANUFACTURING CO.
4200 Carr Lane Ct., P.O. Box 191970
St. Louis, Missouri 63119-7970 USA
Phone: 314-647-6200, FAX: 314-647-5736
Web Site: www.carrlane.com

(Rev. 11/09)

750 lbs
Automatic Toggle Clamp
(Self Adjusting)

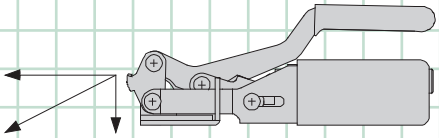

Toggle Edge Clamps apply force forward and downward at the same time.

CL-550-ATEC

Automatic Toggle Edge Clamp

Unique Toggle Edge Clamp applies force forward and downward at the same time. Automatically adjusts for different workpiece sizes. Clamps with the same, repeatable force anywhere within its 9/32" automatic-adjustment range.

Easy to use. Simply set desired clamping force once, after mounting, then operate just like a standard toggle clamp. The patented adjusting mechanism does the rest. For mounting on T-slotted tables, see slotted adapters below.

Hardened clamping nose grips workpiece firmly to apply downthrust force. Handle moves 80° while nose pivots back for loading. Patent no. 4,407,493. Other patents pending. Shipping weight 1.8 lbs.

Holding capacity: **750 lbs**

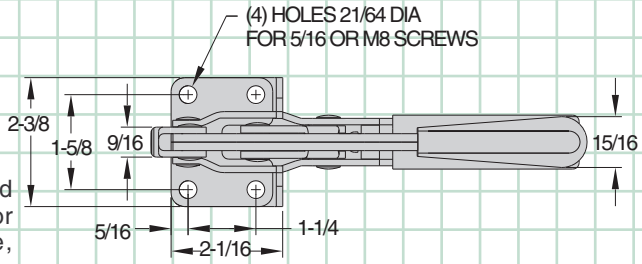

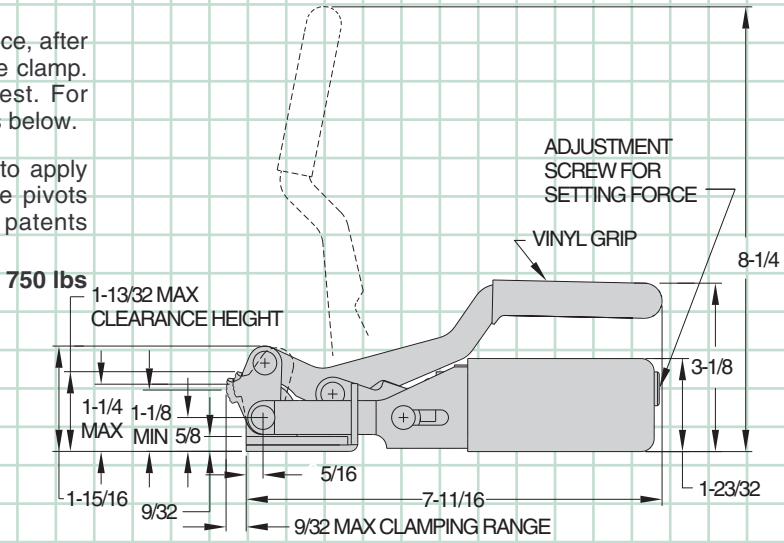

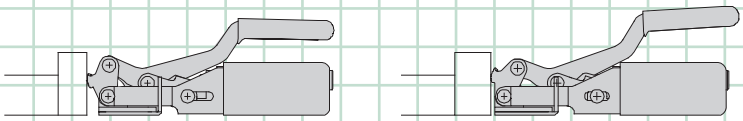

9/32" Automatic-Adjustment Range

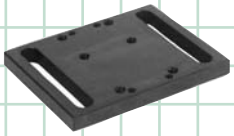

For slotted adaptors
see p. 61MF

MANUFACTURING CO.
4200 Carr Lane Ct., P.O. Box 191970
St. Louis, Missouri 63119-7970 USA
Phone: 314-647-6200, FAX: 314-647-5736
Web Site: www.carrlane.com

LATCH ACTION

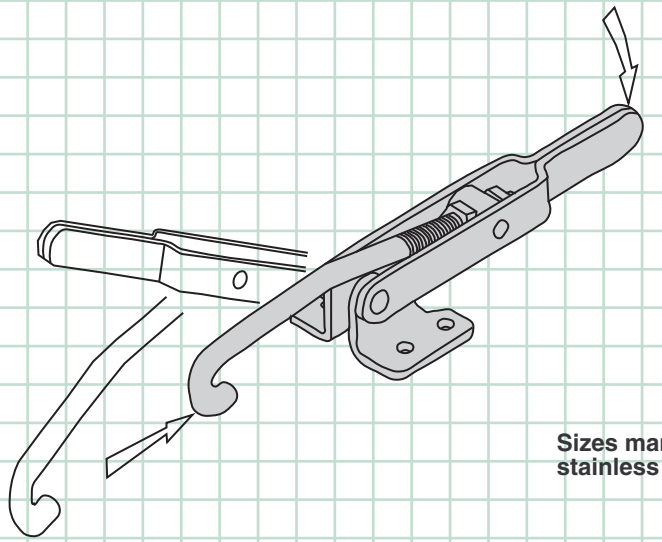

Sizes marked * are also available in stainless steel

All Carr Lane toggle clamps are DFARS and RoHS compliant.

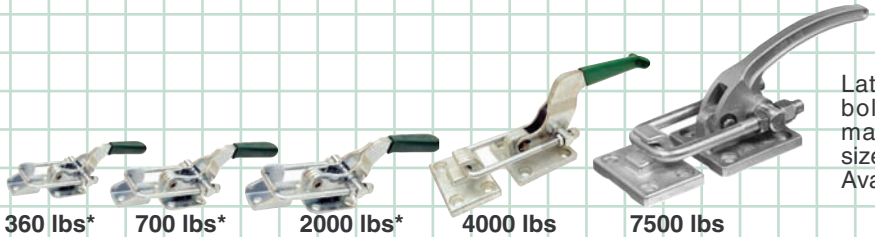

360 lbs* **700 lbs*** **2000 lbs*** **4000 lbs** **7500 lbs**

Adjustable U Bolt

p. 58-61

Latch-action clamp with a threaded U bolt for adjustability. Supplied with matching latch plate (smallest three sizes). Large, comfortable handle grip. Available in five sizes.

500 lbs* **1000 lbs*** **2000 lbs***

Right-Angle Adjustable U Bolt

p. 62

Similar to the latch clamp above, except with its pulling direction perpendicular to the base. Supplied with matching latch plate. Large, comfortable handle grip. Available in three sizes.

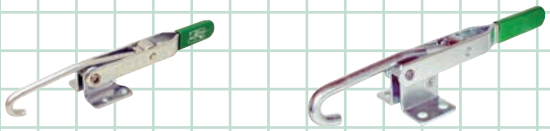

375 lbs* **1000 lbs**

Adjustable Hook

p. 57

Popular hook-type latch clamp. Hook is threaded at one end for easy adjustment. Base rotates 90° to allow horizontal or vertical latching. Available in two sizes.

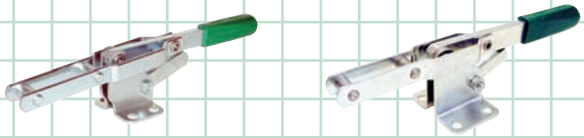

375 lbs* **1200 lbs**

Fixed Length

p. 63

Latch clamp with fixed reach for installation where no length adjustment is required. Adjustable stop allows latching at different heights. Available in two sizes.

MANUFACTURING CO.
4200 Carr Lane Ct., P.O. Box 191970
St. Louis, Missouri 63119-7970 USA
Phone: 314-647-6200, FAX: 314-647-5736
Web Site: www.carrlane.com

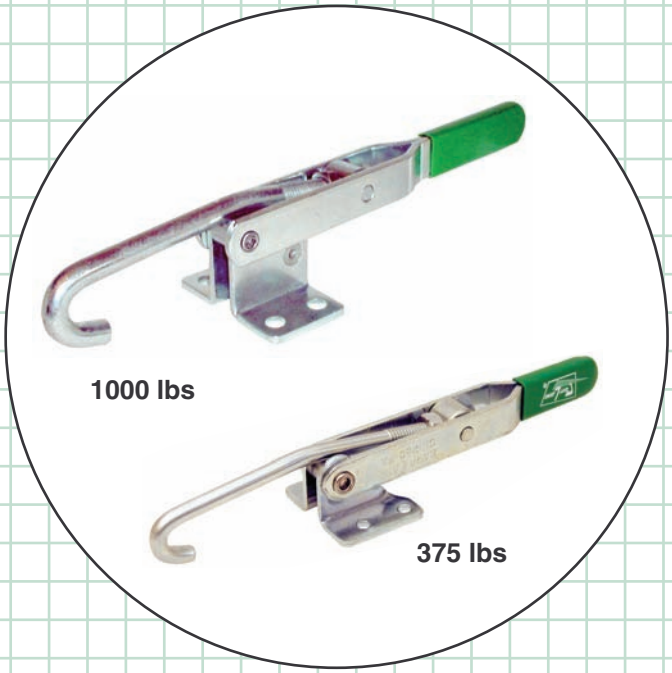

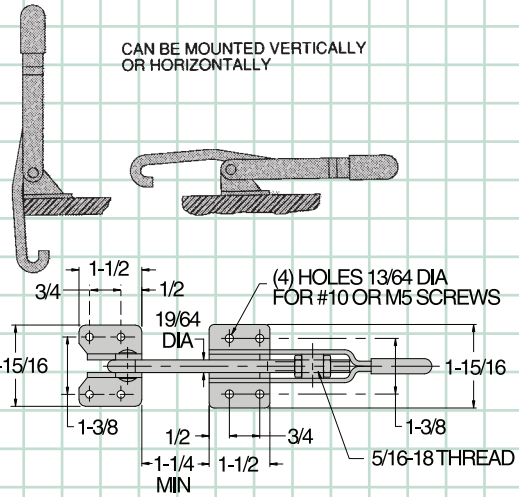

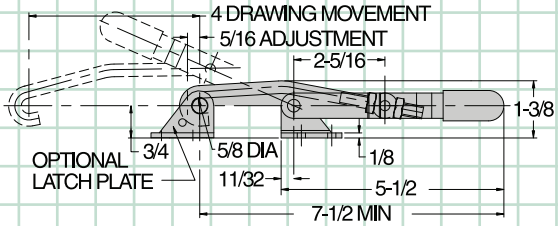

CL-250-PA

Latch clamp with a versatile hook for grasping a rod or rim. Hook is threaded at one end to allow adjustment after mounting. Base pivots to allow horizontal or vertical latching. Choice of two sizes. Optional latch plate can be mounted as shown in the drawings, or reversed, for mounting flexibility.

CL-250-PA

Medium-size latch clamp with a 4-inch drawing movement. Threaded hook allows a 5/16-inch adjustment range. Shipping weight 0.8 lbs. Order matching latch plate CL-250-PA-L separately (CL-250-PA-S-L in stainless).

Holding capacity: **375 lbs**

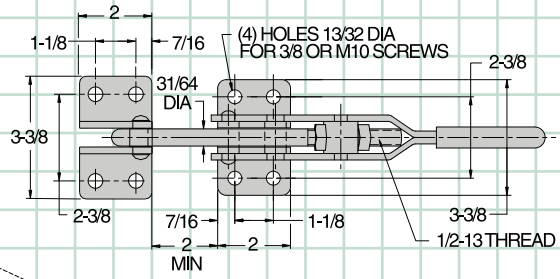

CL-350-PA

Large-capacity latch clamp with 6-1/8-inch drawing movement. Threaded hook allows a 3/4-inch adjustment range. Shipping weight 2.5 lbs. Order matching latch plate CL-350-PA-L separately.

Holding capacity: **1000 lbs**

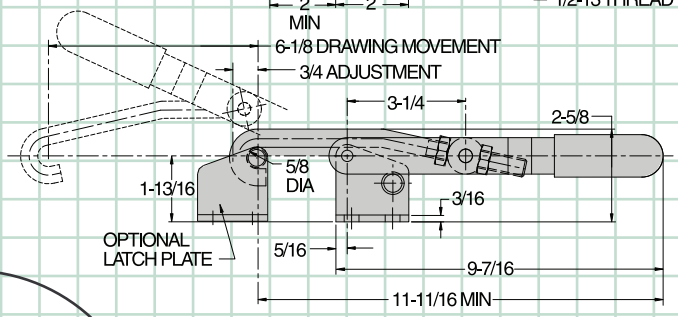

CL-350-PA

NOW AVAILABLE WITH MANUAL SAFETY LOCK!

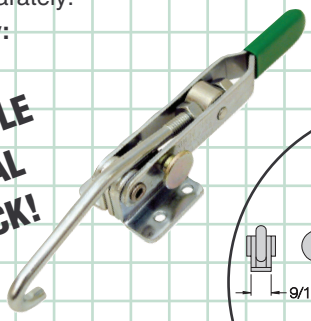

CL-257-PA

Same as CL-250-PA except with a manual safety lock. Push knob in to lock, pull knob out to unlock.

Holding capacity: **375 lbs**

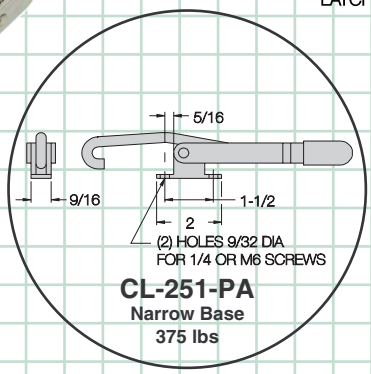

CL-251-PA
Narrow Base
375 lbs

Also available in stainless steel . . .

CL-250-PA-S

Extra hooks available . . .

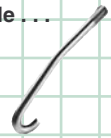

CL-250-PA-HOOK
CL-250-PA-S-HOOK
CL-350-PA-HOOK

Carr Lane®
MANUFACTURING CO.
4200 Carr Lane Ct., P.O. Box 191970
St. Louis, Missouri 63119-7970 USA
Phone: 314-647-6200, FAX: 314-647-5736
Web Site: www.carrlane.com

LATCH ACTION

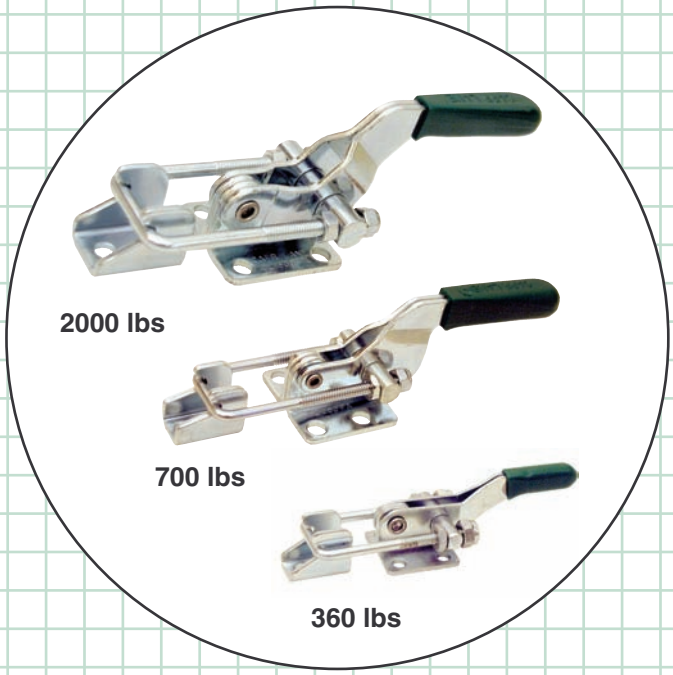

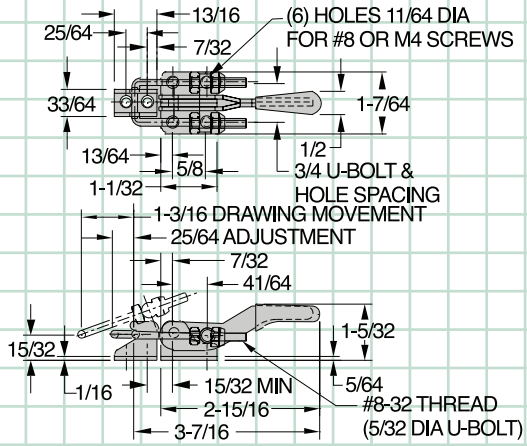

CL-100-PA

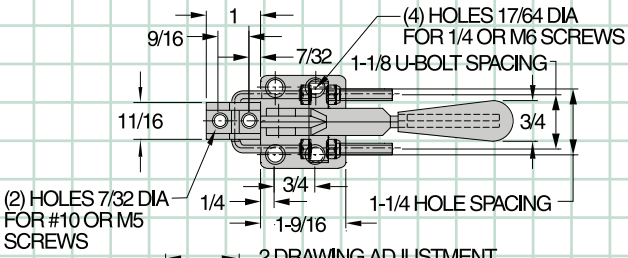

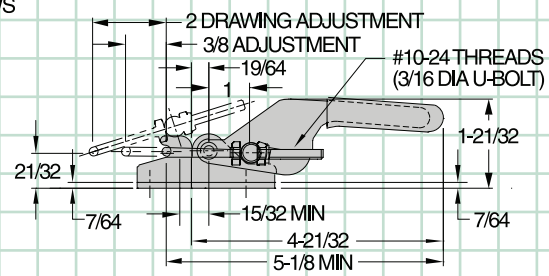

CL-200-PA

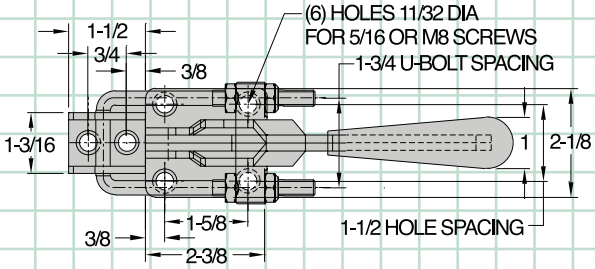

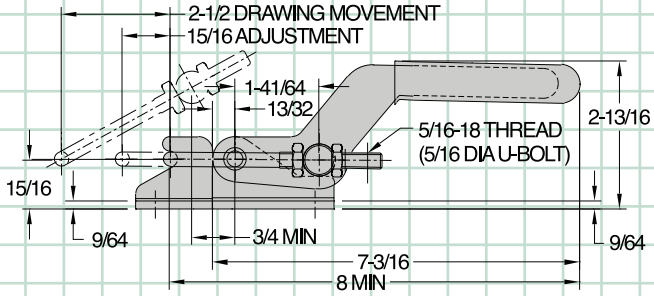

CL-300-PA

Versatile latch clamp with a threaded U bolt for adjustability. Supplied with matching latch plate. Large, comfortable handle grip. Available in three sizes (also see page 59 for two larger sizes).

CL-100-PA

Miniature latch clamp with high holding capacity. 1-3/16-inch drawing movement. Threaded U bolt allows a 25/64-inch adjustment range. Shipping weight 0.2 lbs.

Holding capacity: **360 lbs**

CL-200-PA

Medium-size latch clamp with 2-inch drawing movement. Threaded U bolt allows a 3/8-inch adjustment range. Shipping weight 0.4 lbs.

Holding capacity: **700 lbs**

CL-300-PA

Heavy-duty latch clamp. Well-suited for applications such as plastic molding. 2-1/2-inch drawing movement. Threaded U bolt allows a 15/16-inch adjustment range. Shipping weight 1.5 lbs.

Holding capacity: **2000 lbs**

Also available in stainless steel. . .

CL-100-PA-S
360 lbs

CL-200-PA-S
700 lbs

CL-300-PA-S
2000 lbs

MANUFACTURING CO.
4200 Carr Lane Ct., P.O. Box 191970
St. Louis, Missouri 63119-7970 USA
Phone: 314-647-6200, FAX: 314-647-5736
Web Site: www.carrlane.com

(Rev. 11/09)

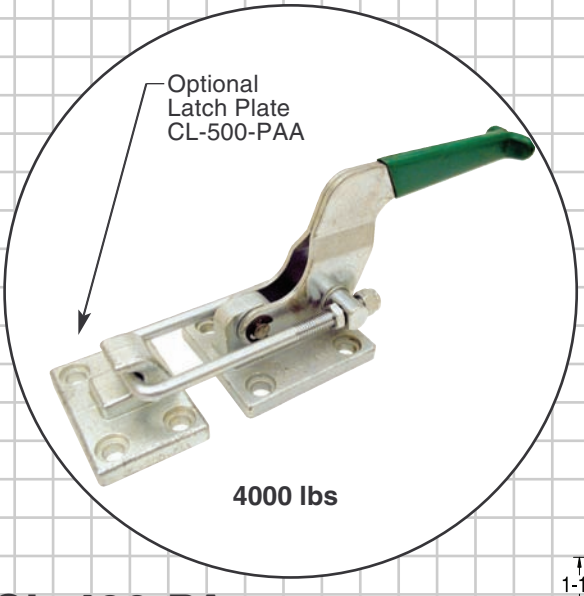

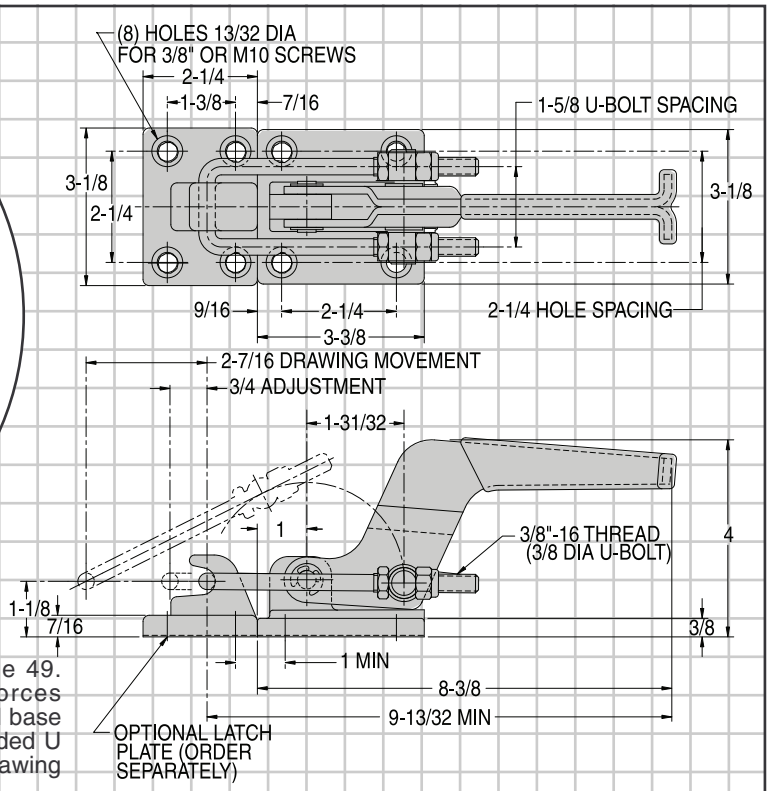

CL-400-PA

Heavier-duty version of the latch clamps on page 49. Strong enough to resist the high expansion forces generated in polyurethane molds. Rugged alloy steel base and latch plate (order latch plate separately). Threaded U bolt allows a 3/4-inch adjustment range. 2-7/16" drawing movement. Shipping weight 2.8 lbs.

Holding capacity: **4000 lbs**

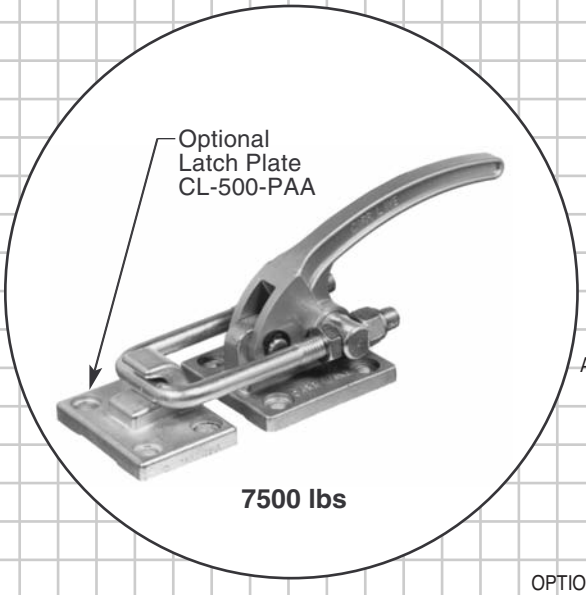

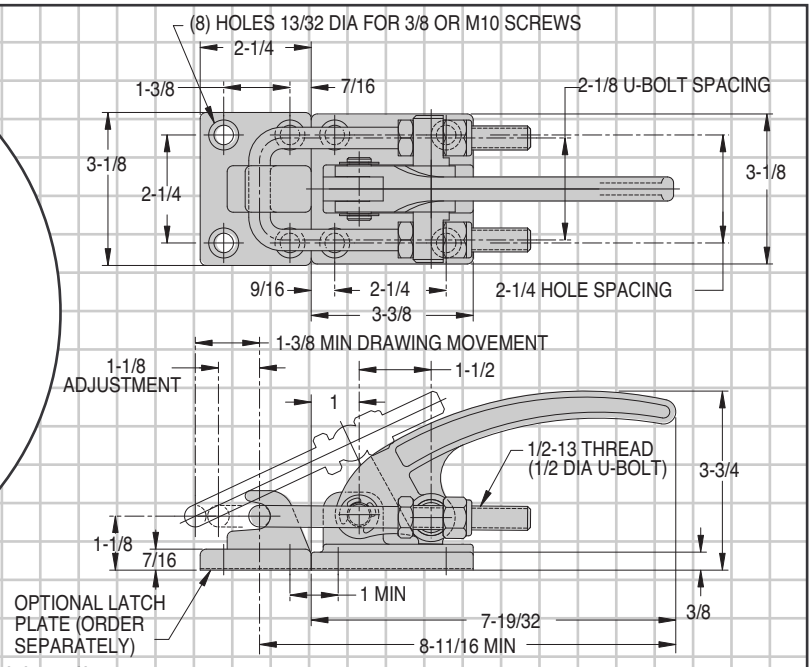

CL-500-PA

Strongest latch clamp available. Alloy steel handle provides even greater strength than the CL-400-PA above, yet with a more-compact overall size. Rugged alloy steel base and latch plate (order latch plate separately). Threaded U bolt allows a 1-1/8-inch adjustment range. 1-3/8" drawing movement. Shipping weight 3.3 lbs.

Holding capacity: **7500 lbs**

Also available in stainless steel...

CL-500-PA-S (Clamp)

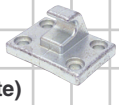

CL-500-PAA-S (Latch Plate)

Carr Lane®
MANUFACTURING CO.
4200 Carr Lane Ct., P.O. Box 191970
St. Louis, Missouri 63119-7970 USA
Phone: 314-647-6200, FAX: 314-647-5736
Web Site: www.carrlane.com

LATCH ACTION

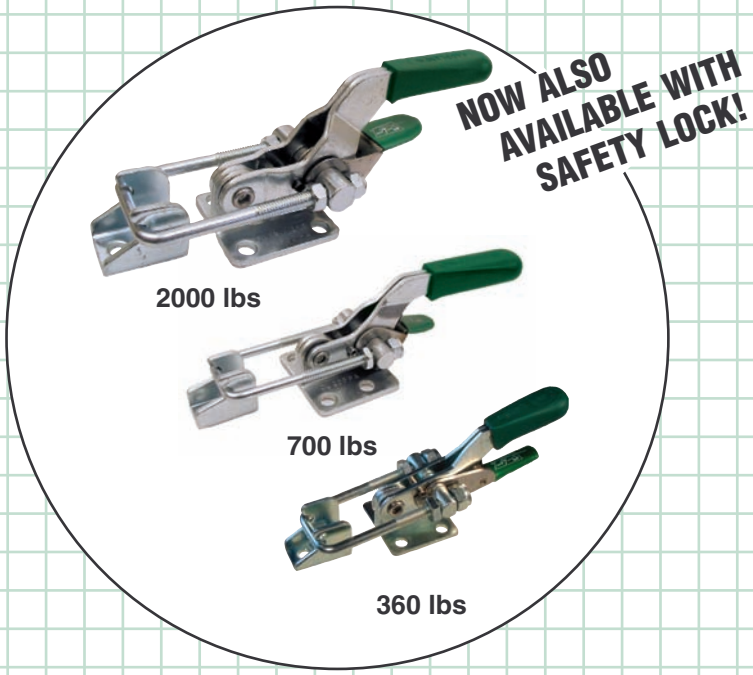

Same as our latch clamps on page 58 except with our new safety-lock feature. This safety lock automatically engages when the clamp is closed, then remains locked until manually disengaged by pressing the lever before opening. This prevents the latch clamp from being accidentally opened by bumping the handle.

Versatile latch clamp with a threaded U bolt for adjustability. Supplied with matching latch plate. Large, comfortable handle grip. Available in two sizes (also see page 61 for two larger sizes).

CL-100-LPA NEW!

With Safety Lock

Miniature latch action clamp with high holding capacity. 1-3/16-inch drawing movement. Threaded U bolt allows a 25/64-inch adjustment range. Shipping weight 0.2 lbs.

Holding capacity: 360 lbs

CL-200-LPA

With Safety Lock

Medium-size latch clamp with 2-inch drawing movement. Threaded U bolt allows a 3/8-inch adjustment range. Shipping weight 0.4 lbs.

Holding capacity: 700 lbs

CL-300-LPA

With Safety Lock

Heavy-duty latch clamp. Well-suited for applications such as plastic molding. 2-1/2-inch drawing movement. Threaded U bolt allows a 15/16-inch adjustment range. Shipping weight 1.5 lbs.

Holding capacity: 2000 lbs

Also available in stainless steel. . .

CL-100-LPA-S
360 lbs

CL-200-LPA-S
700 lbs

CL-300-LPA-S
2000 lbs

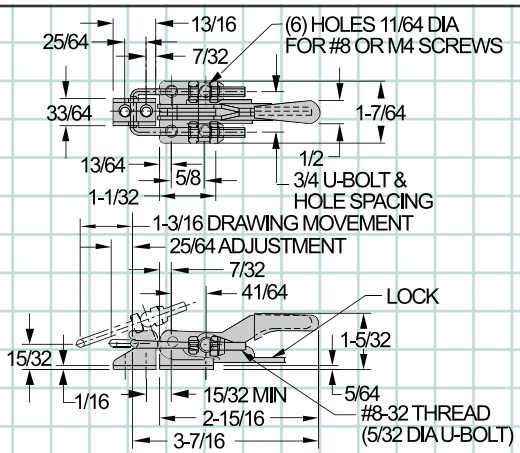

CL-100-LPA

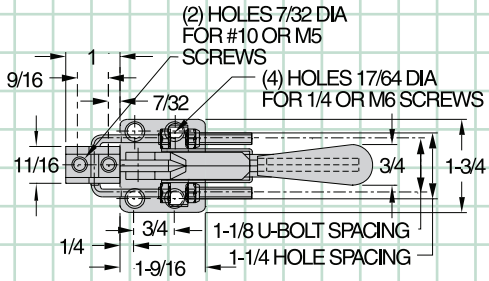

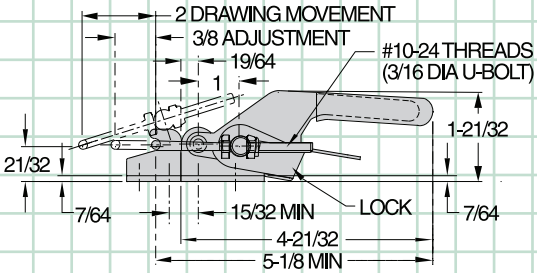

CL-200-LPA

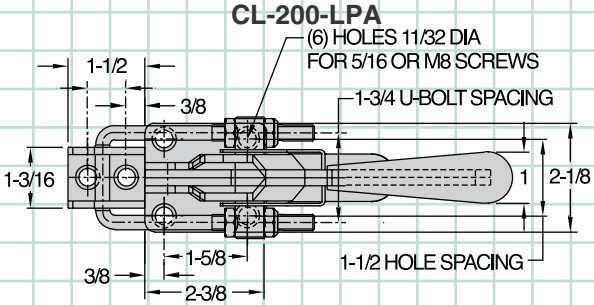

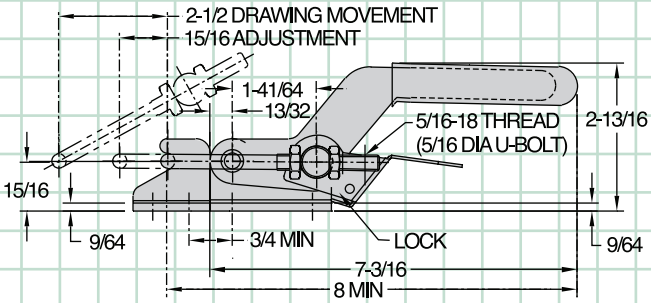

CL-300-LPA

MANUFACTURING CO.
4200 Carr Lane Ct., P.O. Box 191970
St. Louis, Missouri 63119-7970 USA
Phone: 314-647-6200, FAX: 314-647-5736
Web Site: www.carrlane.com

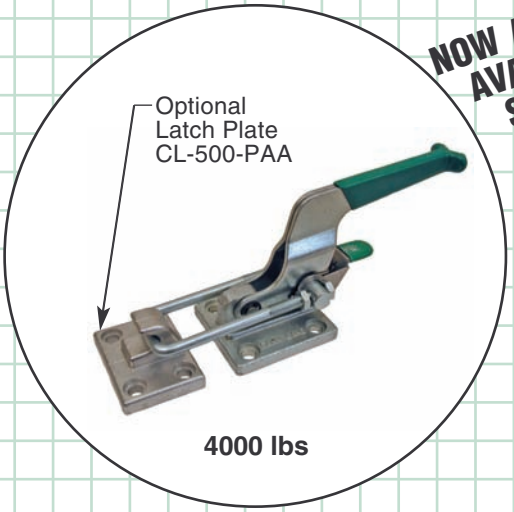

NOW ALSO AVAILABLE WITH SAFETY LOCK!

Optional Safety Lock
(Press lever to unlock)

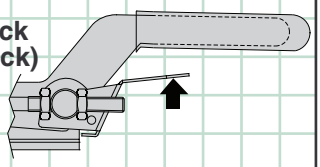

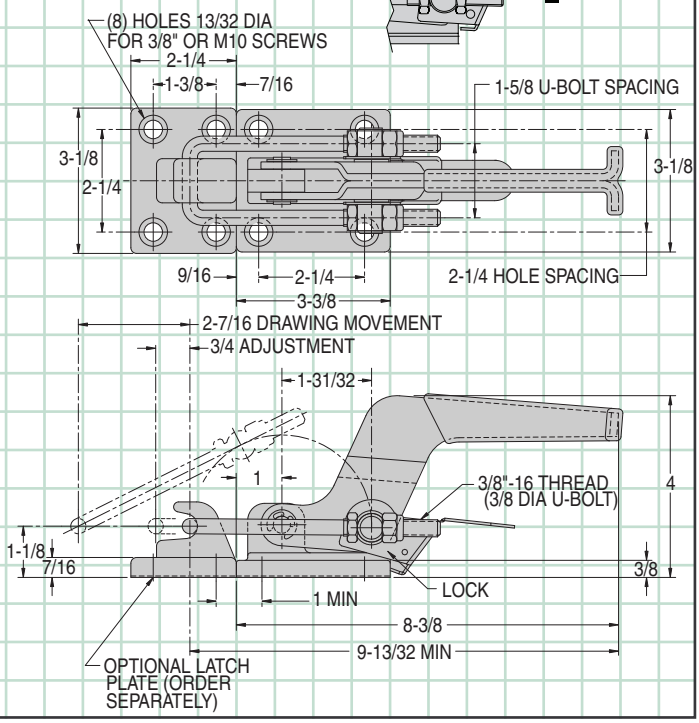

CL-400-LPA

With Safety Lock

Same as our latch clamps on page 59 except with our new safety-lock feature. This safety lock automatically engages when the clamp is closed, then remains locked until manually disengaged by pressing the lever before opening. This prevents the latch clamp from being accidentally opened by bumping the handle. Rugged alloy steel base and latch plate (order latch plate separately). Threaded U bolt allows a 3/4-inch adjustment range. 2-7/16" drawing movement. Shipping weight 2.8 lbs.

Holding capacity: **4000 lbs**

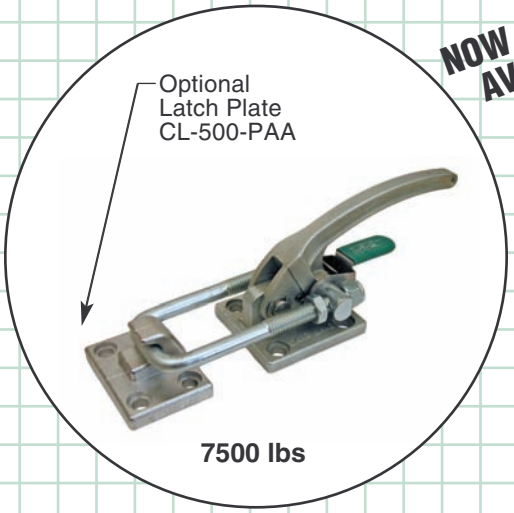

NOW ALSO AVAILABLE WITH SAFETY LOCK!

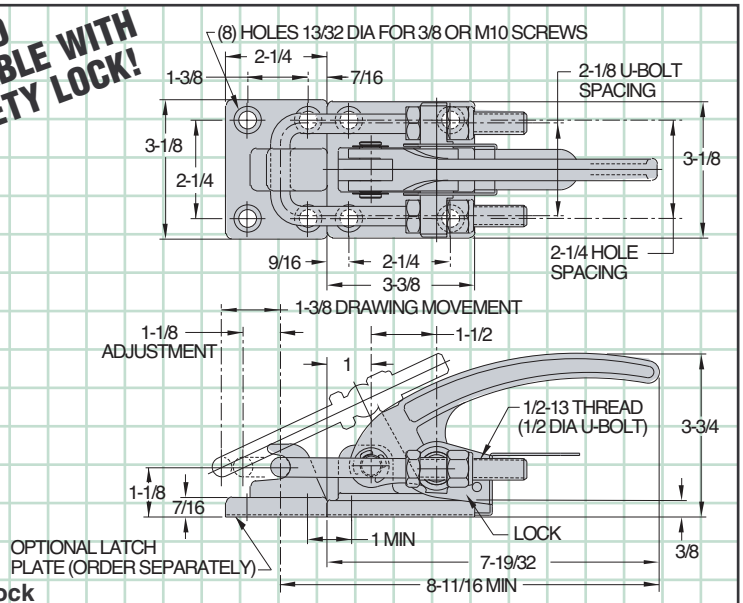

CL-500-LPA

With Safety Lock

Same as our latch clamps on page 59 except with our new safety-lock feature. This safety lock automatically engages when the clamp is closed, then remains locked until manually disengaged by pressing the lever before opening. This prevents the latch clamp from being accidentally opened by bumping the handle. Rugged alloy steel base and latch plate (order latch plate separately). Threaded U bolt allows a 1-1/8-inch adjustment range. 1-3/8" drawing movement. Shipping weight 3.3 lbs.

Holding capacity: **7500 lbs**

Also available in stainless steel...

CL-500-LPA-S (Clamp)

CL-500-PAA-S (Latch Plate)

Carr Lane®
MANUFACTURING CO.
4200 Carr Lane Ct., P.O. Box 191970
St. Louis, Missouri 63119-7970 USA
Phone: 314-647-6200, FAX: 314-647-5736
Web Site: www.carrlane.com

LATCH ACTION

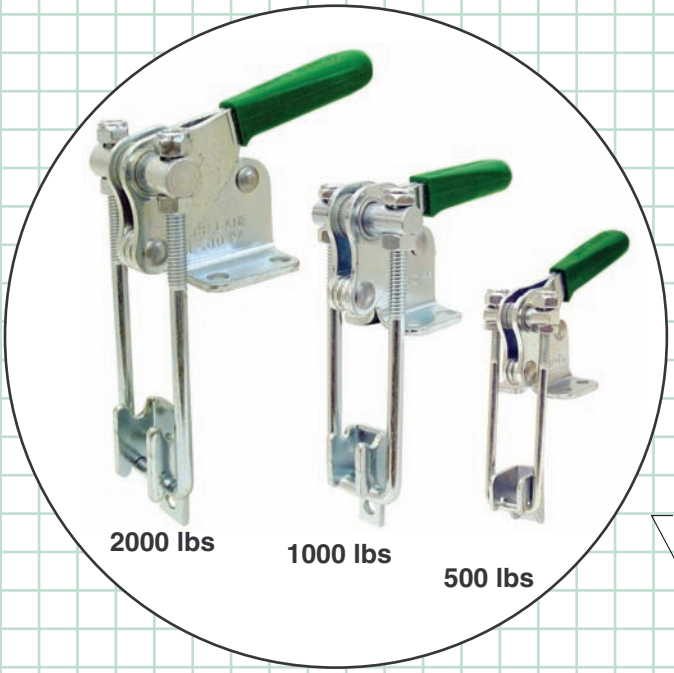

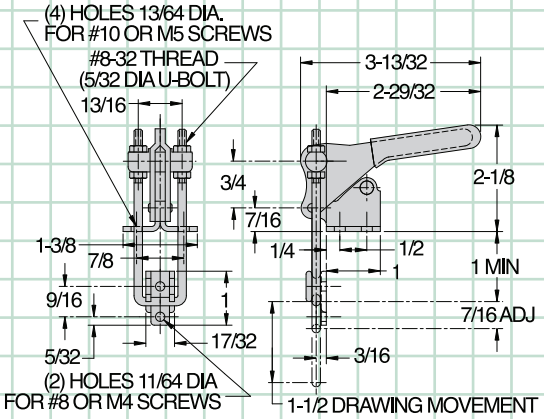

CL-110-PA

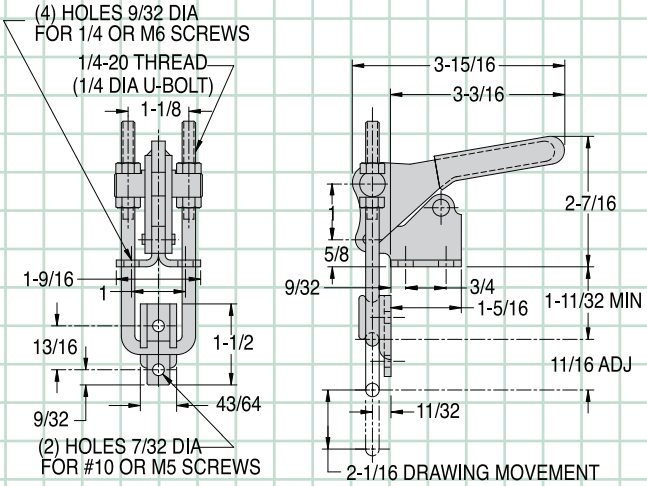

CL-210-PA

Similar to the adjustable-U-bolt latch clamps on page 58, except with their pulling direction perpendicular to the base. Supplied with matching latch plate. Large, comfortable handle grip. Available in three sizes.

CL-110-PA

Miniature latch clamp with high holding capacity. 1-1/2-inch drawing movement. Threaded U bolt allows a 7/16-inch adjustment range. Shipping weight 0.3 lbs.

Holding capacity: **500 lbs**

CL-210-PA

Medium-size latch clamp with 2-1/16-inch drawing movement. Threaded U bolt allows an 11/16-inch adjustment range. Shipping weight 0.6 lbs.

Holding capacity: **1000 lbs**

CL-310-PA

Heavy-duty latch clamp. Well-suited for applications such as plastic molding. 2-1/2-inch drawing movement. Threaded U bolt allows an 1-1/8-inch adjustment range. Shipping weight 1.4 lbs.

Holding capacity: **2000 lbs**

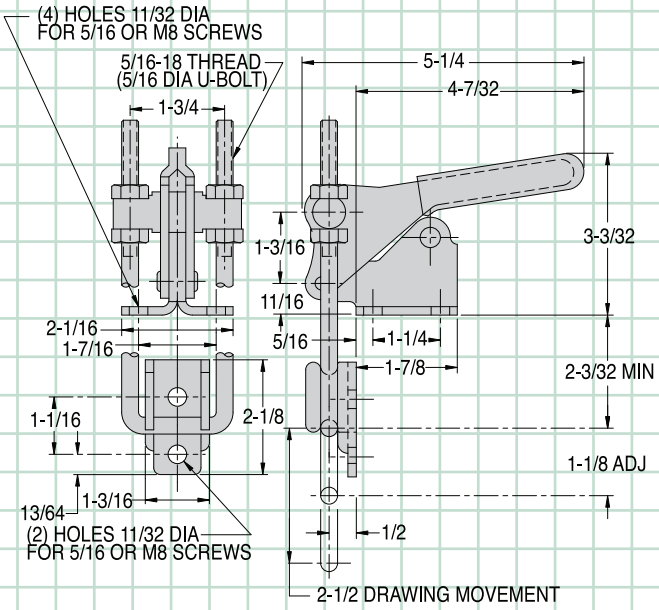

CL-310-PA

Also available in stainless steel. . .

CL-110-PA-S
500 lbs

CL-210-PA-S
1000 lbs

CL-310-PA-S
2000 lbs

MANUFACTURING CO.
4200 Carr Lane Ct., P.O. Box 191970
St. Louis, Missouri 63119-7970 USA
Phone: 314-647-6200, FAX: 314-647-5736
Web Site: www.carrlane.com

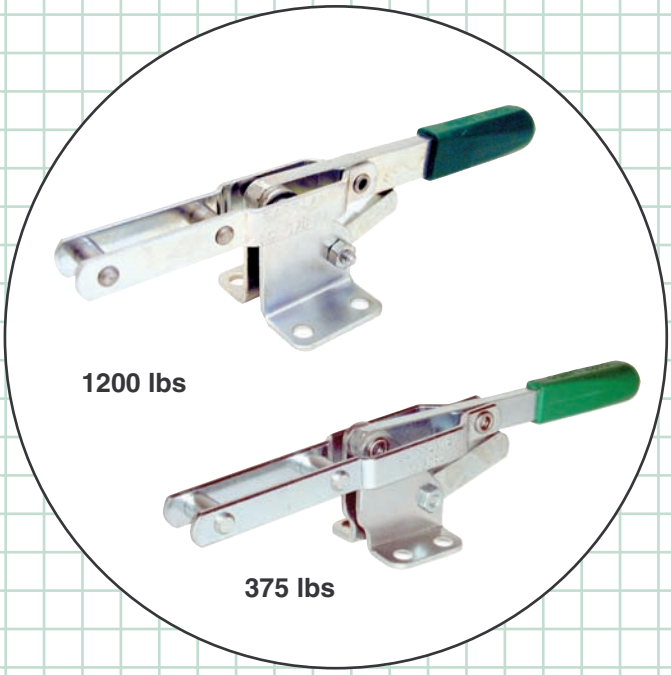

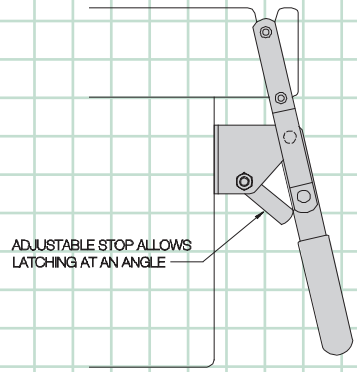

Latch clamp with fixed reach for installation where no length adjustment is required. An adjustable stop allows latching at different angles. Available in two sizes.

CL-150-PA

Medium-size clamp with 4-inch drawing movement. Shipping weight 0.8 lbs.

Holding capacity: **375 lbs**

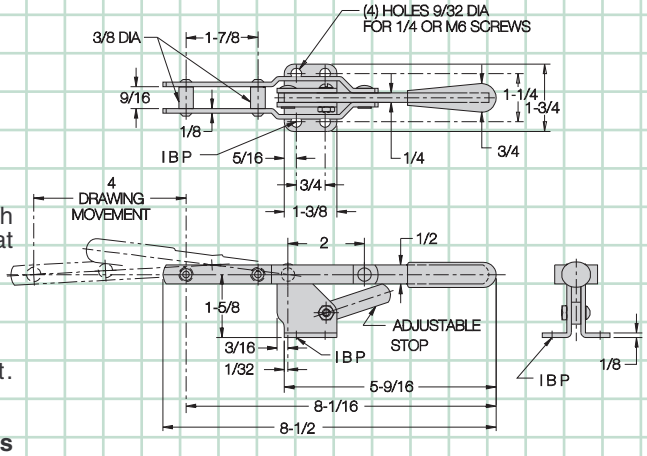

CL-150-PA

CL-170-PA

Larger clamp with 3-3/8-inch drawing movement. Shipping weight 1.2 lbs.

Holding capacity: **1200 lbs**

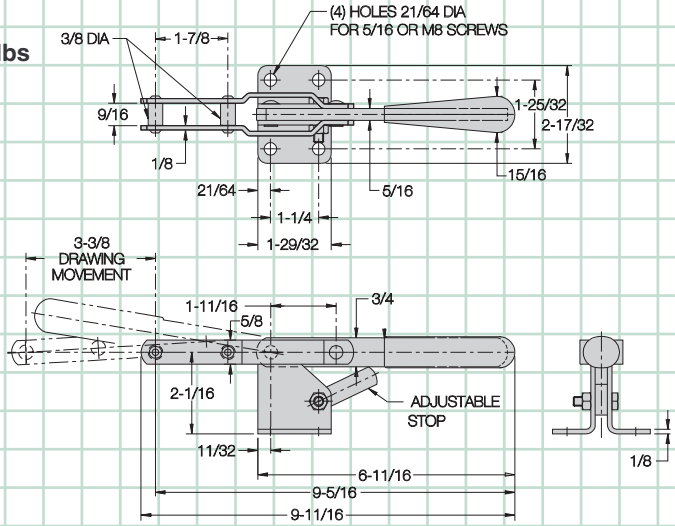

CL-170-PA

Also available in stainless steel...

CL-150-PA-S

Carr Lane®
MANUFACTURING CO.
4200 Carr Lane Ct., P.O. Box 191970
St. Louis, Missouri 63119-7970 USA
Phone: 314-647-6200, FAX: 314-647-5736
Web Site: www.carrlane.com

TOGGLE PLIERS

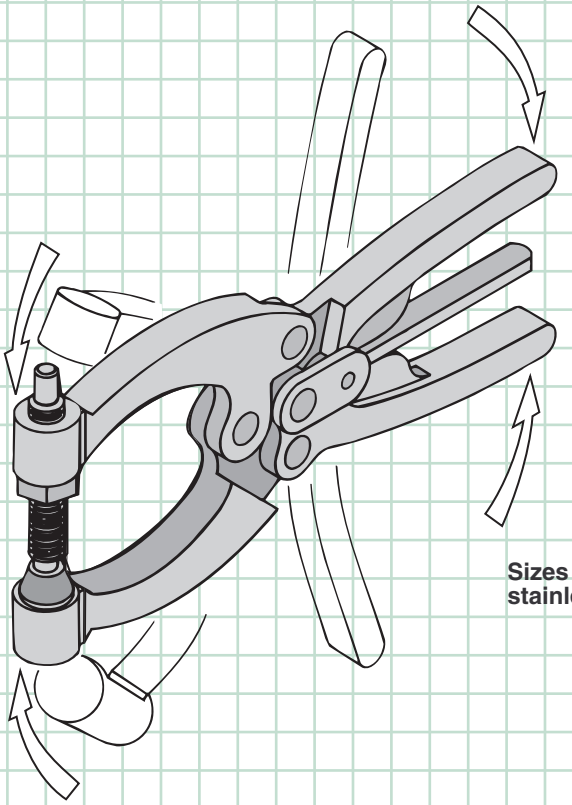

Sizes marked * are also available in stainless steel

All Carr Lane toggle clamps are DFARS and RoHS compliant.

200 lbs **350 lbs** **700 lbs** **700 lbs** **700 lbs**

Forged Toggle Pliers

pp. 65-67

Powerful forged steel toggle pliers. Available in five sizes. Larger sizes feature a quick-release lever for easy opening.

800 lbs*

Permanently Attached

p. 68

Handy weld-on/bolt-on clamp for holding down lids, covers etc. Clamping jaw opens a full 90° for extra clearance.

800 lbs

Toggle Bar Clamps

p. 68

Multi-purpose bar clamp, with forged steel clamping jaw. Order with optional lower jaw, or attach bar by welding.

Carr Lane® MANUFACTURING CO.
4200 Carr Lane Ct., P.O. Box 191970
St. Louis, Missouri 63119-7970 USA
Phone: 314-647-6200, FAX: 314-647-5736
Web Site: www.carrlane.com

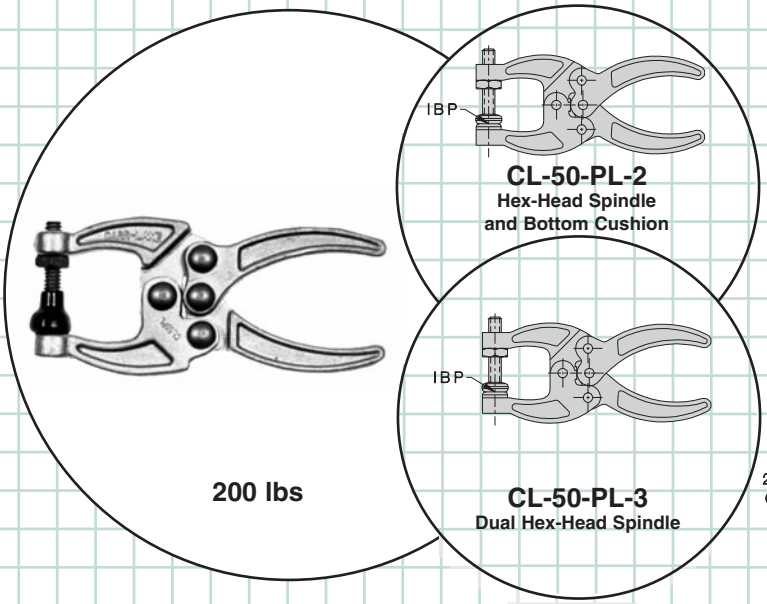

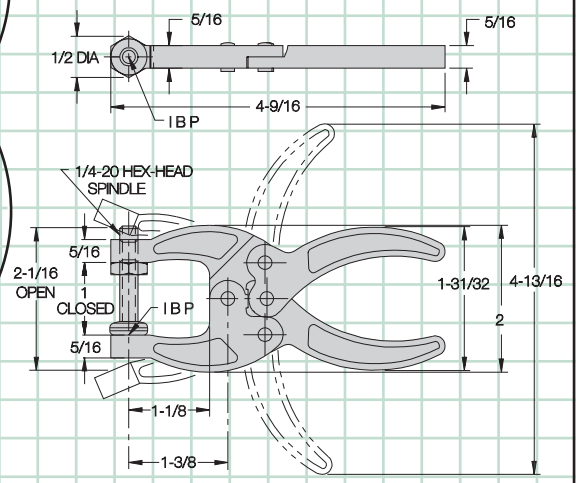

CL-50-PL

Hex-Head Spindle

Tiny-yet-powerful toggle pliers made of forged steel. 1-inch jaw width. Supplied with 1/4-20 vinyl-coated hex-head spindle CL-14208-SA. Optionally available as CL-50-PL-2 with a bottom-jaw cushion, or as CL-50-PL-3 with (2) vinyl-coated hex-head spindles, CL-14100-SA. Shipping weight 0.4 lbs.

Holding capacity: **200 lbs**

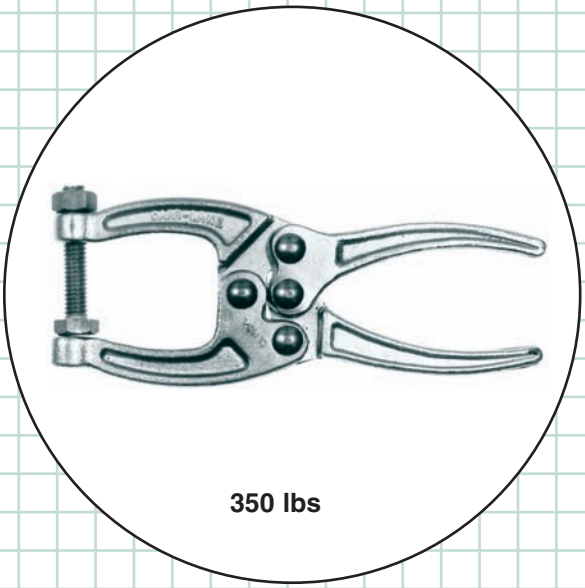

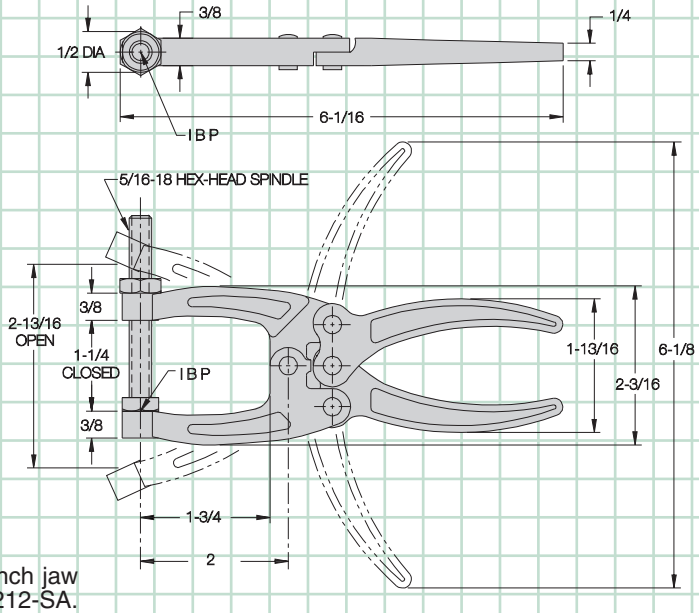

CL-150-PL

Medium-size toggle pliers made of forged steel. 1-1/4-inch jaw width. Supplied with 5/16-18 hex-head spindle CL-516212-SA. Shipping weight 0.5 lbs.

Holding capacity: **350 lbs**

Carr Lane®
MANUFACTURING CO.
4200 Carr Lane Ct., P.O. Box 191970
St. Louis, Missouri 63119-7970 USA
Phone: 314-647-6200, FAX: 314-647-5736
Web Site: www.carrlane.com

TOGGLE PLIERS

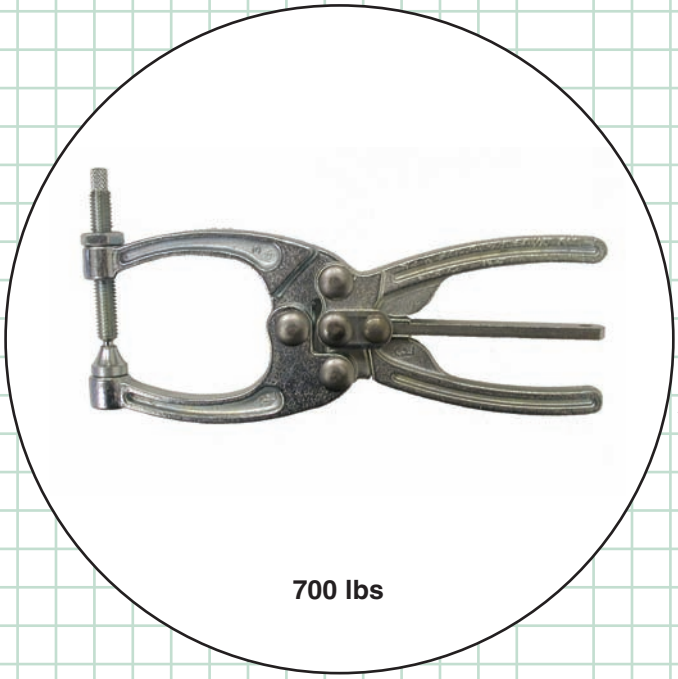

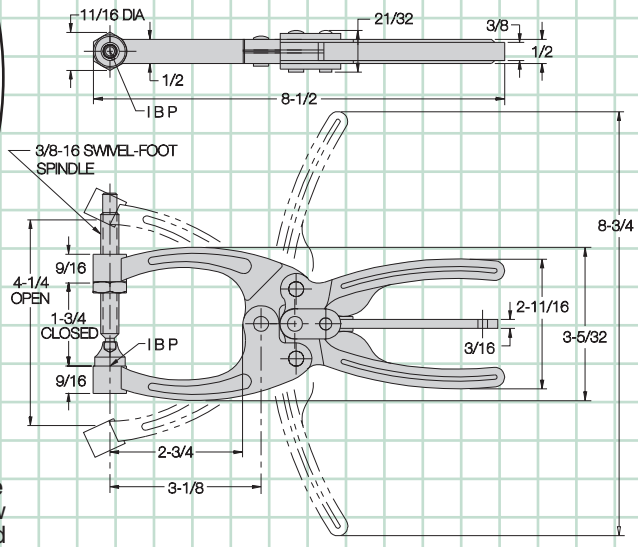

CL-254-PL

Swivel-Foot Spindle

Heavy-duty toggle pliers made of forged steel. 1-3/4 inch jaw width. Two-way quick-release lever for easy opening. Supplied with 3/8-16 swivel-foot spindle CL-38314-SF. Optionally available as CL-250-PL with hex-head spindle CL-38314-SA, as CL-254-PL-2 with (2) hex-head spindles CL-38314-SA, or as CL-252-PL with flat-cushion spindle CL-38314-FC. Shipping weight 1.3 lbs.

Holding capacity: **700 Lbs**

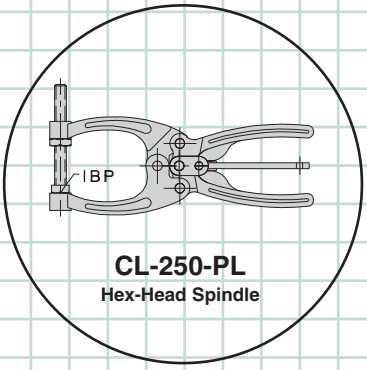

CL-250-PL
Hex-Head Spindle

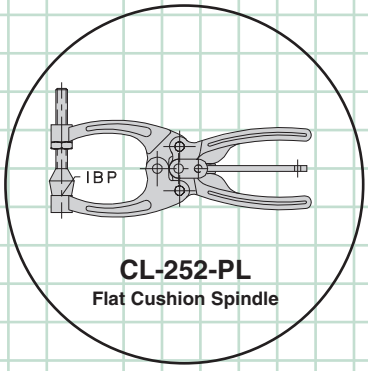

CL-252-PL
Flat Cushion Spindle

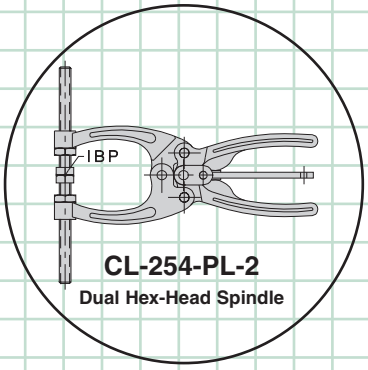

CL-254-PL-2
Dual Hex-Head Spindle

MANUFACTURING CO.
4200 Carr Lane Ct., P.O. Box 191970
St. Louis, Missouri 63119-7970 USA
Phone: 314-647-6200, FAX: 314-647-5736
Web Site: www.carrlane.com

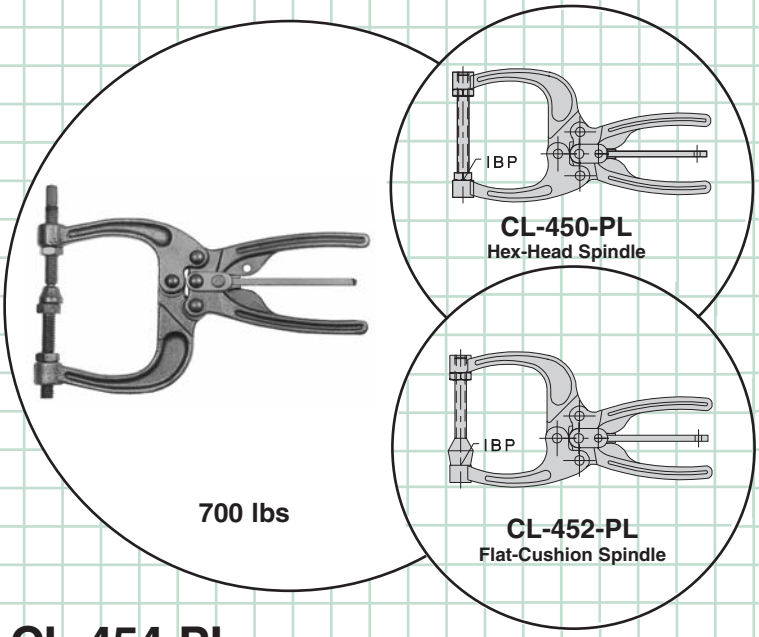

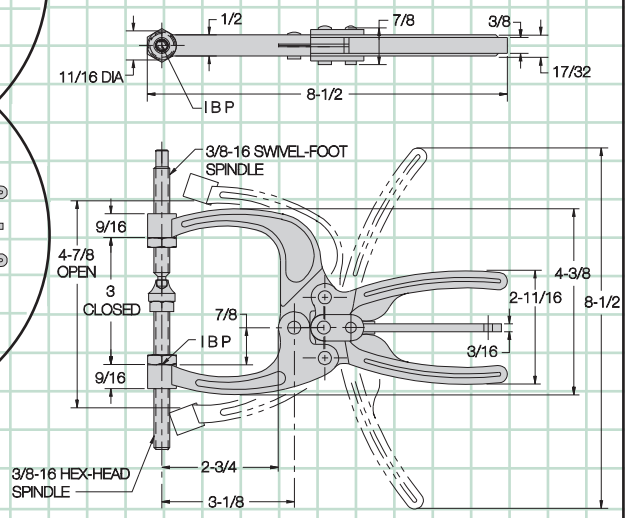

CL-454-PL

Swivel-Foot and Hex-Head Spindles

Wide-jaw heavy-duty toggle pliers made of forged steel. 3-inch jaw width. Two-way quick-release lever for easy opening. Supplied with 3/8-16 swivel-foot spindle CL-38314-SF and hex-head spindle CL-38314-SA. Optionally available as CL-450-PL with single hex-head spindle CL-38314-SA, or as CL-452-PL with a single flat-cushion spindle CL-38314-FC. Shipping weight 1.4 lbs.

Holding capacity: **700 lbs**

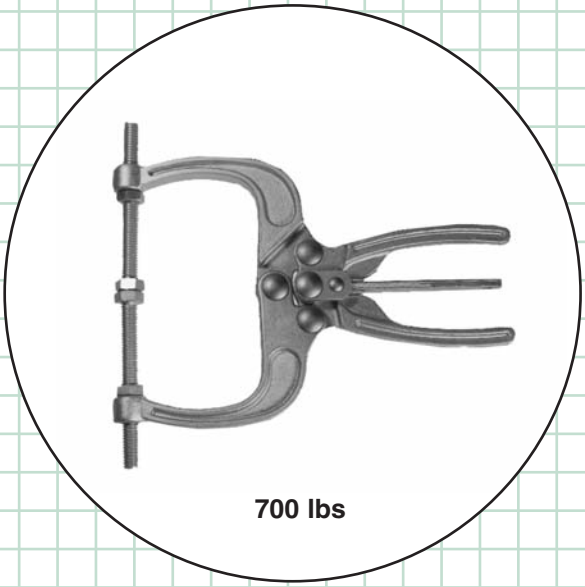

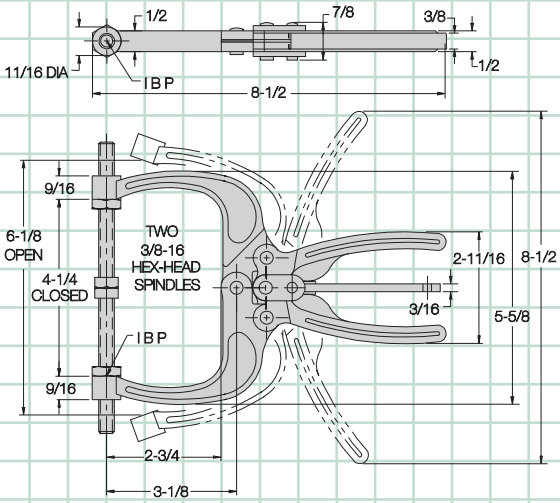

CL-550-PL

Extra-wide-jaw heavy-duty toggle pliers made of forged steel. 4-1/4-inch jaw width. Two-way quick-release lever for easy opening. Supplied with (2) 3/8-16 hex-head spindles CL-38314-SA. Shipping weight 1.6 lbs.

Holding capacity: **700 lbs**

Carr Lane®
MANUFACTURING CO.
4200 Carr Lane Ct., P.O. Box 191970
St. Louis, Missouri 63119-7970 USA
Phone: 314-647-6200, FAX: 314-647-5736
Web Site: www.carrlane.com

TOGGLE PLIERS

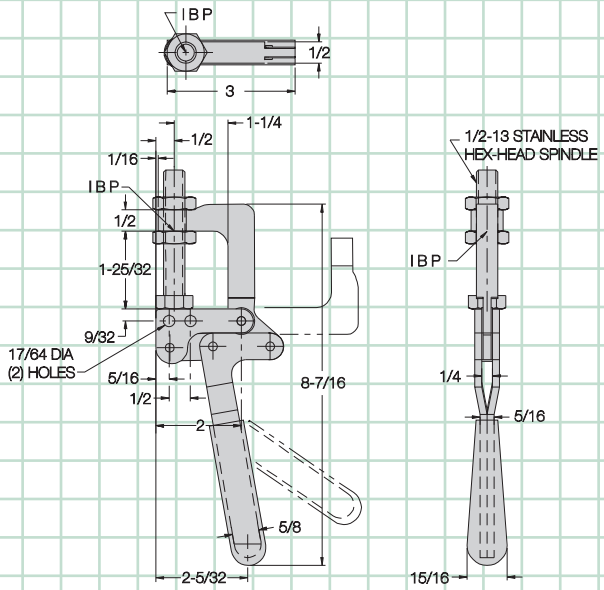

CL-325-PL-S

Handy weld-on/bolt-on stainless steel clamp for holding down lids, covers, etc. Clamping jaw opens a full 90° for extra clearance, while handle moves 50°. Supplied with 1/2-13 stainless hex-head spindle CL-12234-SA-S. Shipping weight 1.0 lbs.

Holding capacity: **800 lbs**

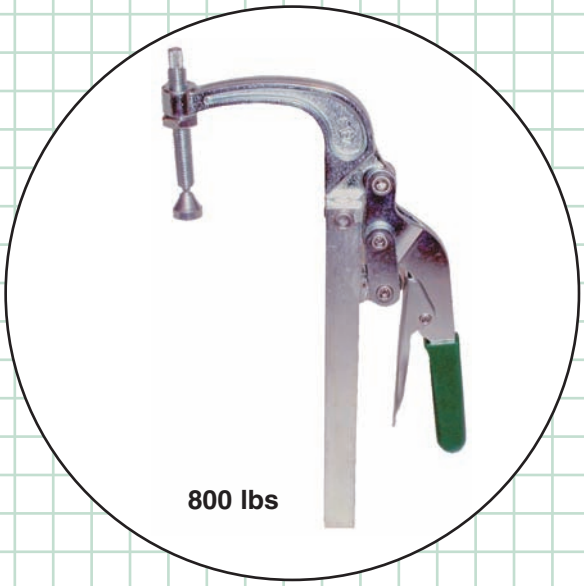

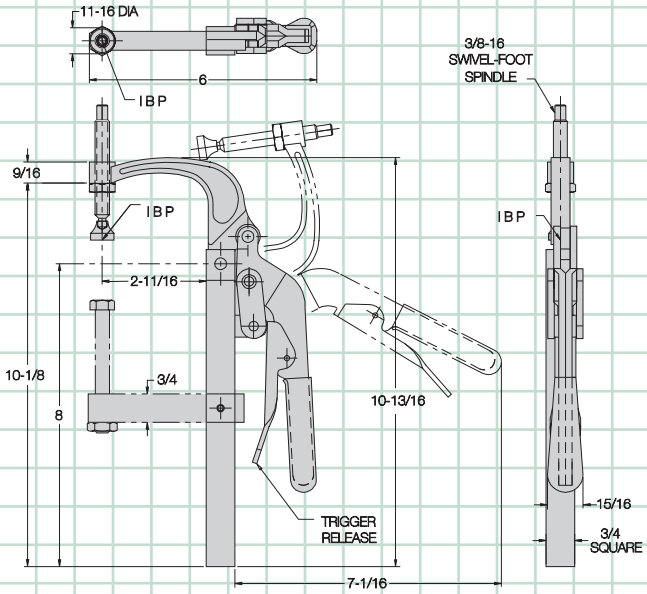

CL-345-PL

Multi-purpose bar clamp with forged steel clamping jaw. Order with optional lower jaw CL-345-PLA, or attach bar by welding. Jaw opens 84° while handle moves 60°. Supplied with 3/8-16 swivel-foot spindle CL-38314-SF. Shipping weight 2.7 lbs.

Holding capacity: **800 lbs**

Optional lower jaw . . .

CL-345-PLA

MANUFACTURING CO.
4200 Carr Lane Ct., P.O. Box 191970
St. Louis, Missouri 63119-7970 USA
Phone: 314-647-6200, FAX: 314-647-5736
Web Site: www.carrlane.com

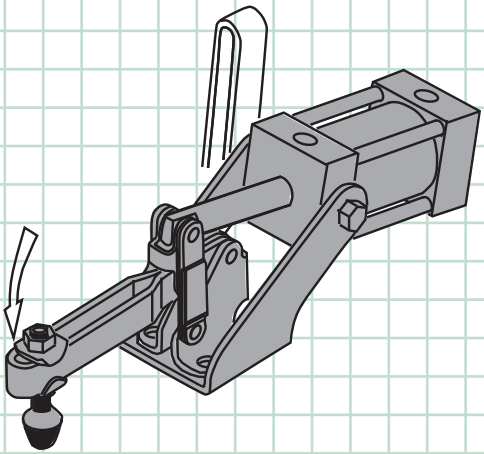

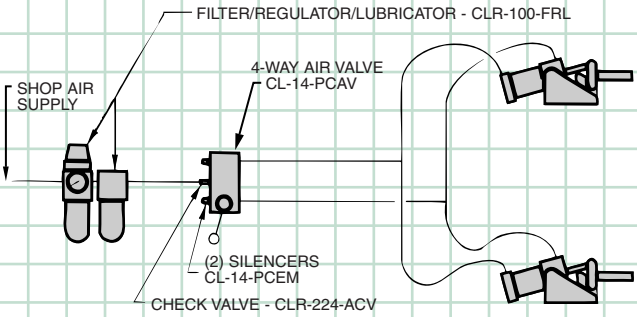

All Carr Lane toggle clamps are DFARS and RoHS compliant.

100 lbs **200 lbs** **500 lbs** **1000 lbs** **5000 lbs**

Toggle Hold-Down Clamps

pp. 70-74

Similar to a vertical-handle hold-down clamp, except linkage is operated by a double-acting air cylinder instead of by hand. Toggle linkage provides high holding capacity and insures positive mechanical locking even if air pressure fails.

100 lbs **850 lbs**

Toggle Push Clamps

p. 75-76

Similar to a manual plunger clamp, except linkage is operated by a double-acting air cylinder instead of by hand. Toggle linkage provides high holding capacity and insures positive mechanical locking even if air pressure fails.

14 lbs **25 lbs** **66 lbs** **100 lbs** **165 lbs** **277 lbs**

Swing Clamps

(See *SWIFTSURE* Catalog)

Hold-down clamp with a clamping arm that rotates 90° for clear loading. Sturdy helical-cam mechanism first rotates arm, then clamps down. Double acting. (Not shown in this catalog section . . . see ***SWIFTSURE*** catalog to order.)

Clamping Valves **Check Valves** **Exhaust Mufflers** **Air Fittings** **Seal Replacement Kits**

Air Accessories

p. 77

Complete selection of accessories including clamping valves, check valves, exhaust mufflers, air fittings, and seal replacement kits.

Carr Lane®
MANUFACTURING CO.
4200 Carr Lane Ct., P.O. Box 191970
St. Louis, Missouri 63119-7970 USA
Phone: 314-647-6200, FAX: 314-647-5736
Web Site: www.carrlane.com

AIR-POWERED CLAMPS

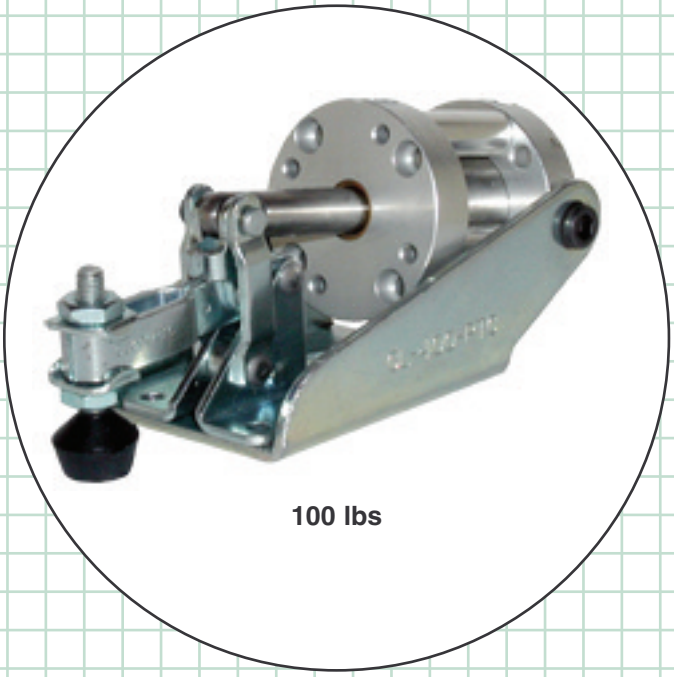

100 lbs

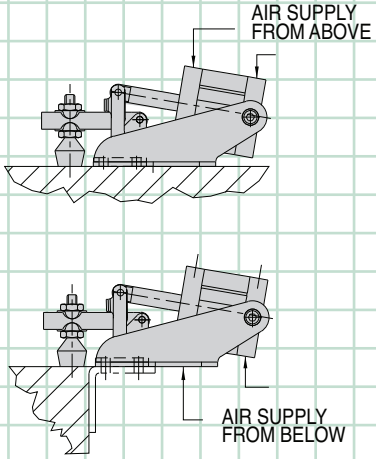

CL-400-PTC

Super-compact hold-down clamp for applications where space is at a premium. Open arm allows spindle adjustment. Toggle linkage provides high holding capacity and insures positive mechanical locking even if air pressure fails. Arm opens 100°. 3/4"-bore double-acting air cylinder with #10-32 ports (see page 77 to order fittings). Supplied with #10-32 flat-cushion spindle CL-316112-FC and (2) CL-3166-TW flanged washers. 100-psi maximum input air pressure. Shipping weight 0.8 lbs. An optional bracket for side mounting is also available (CL-400-PCBR).

Holding capacity: **100 lbs**
Clamping force at 100 psi, at center of arm: **100 lbs**

Also available with position sensing:

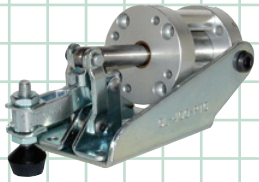

Please see our web catalog for more information.

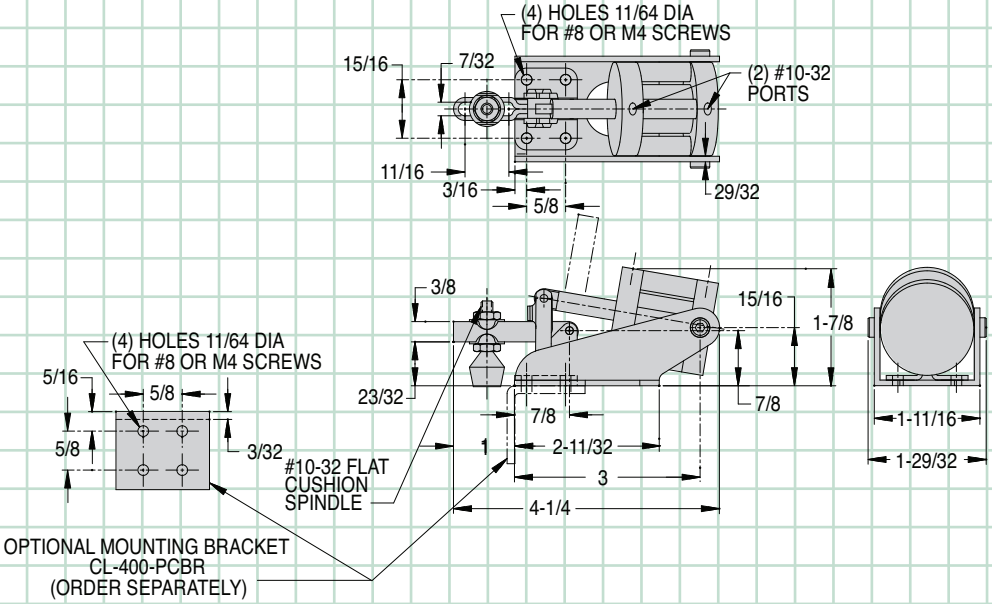

MANUFACTURING CO.
4200 Carr Lane Ct., P.O. Box 191970
St. Louis, Missouri 63119-7970 USA
Phone: 314-647-6200, FAX: 314-647-5736
Web Site: www.carrlane.com

(Rev. 11/09)

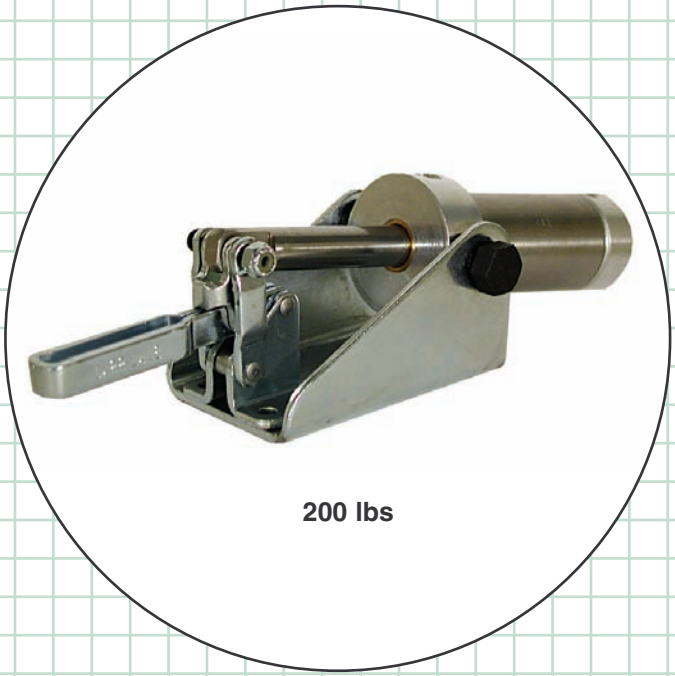

200 lbs

Also available with position sensing:

Please see our web catalog for more information.

CL-500-PTC

Small-yet-powerful hold-down clamp with a long open arm. Toggle linkage provides high holding capacity and insures positive mechanical locking even if air pressure fails. Arm opens 100°. 1-1/4"-bore double-acting air cylinder with 1/8-NPT ports. Accepts any 1/4-20 short spindle and (2) CL-148-TW flanged washers ... see pages 78-82 to order. 100-psi maximum input air pressure. Shipping weight 2.5 lbs.

Holding capacity:	**200 lbs**
Clamping force at 100 psi, at center of arm:	**200 lbs**

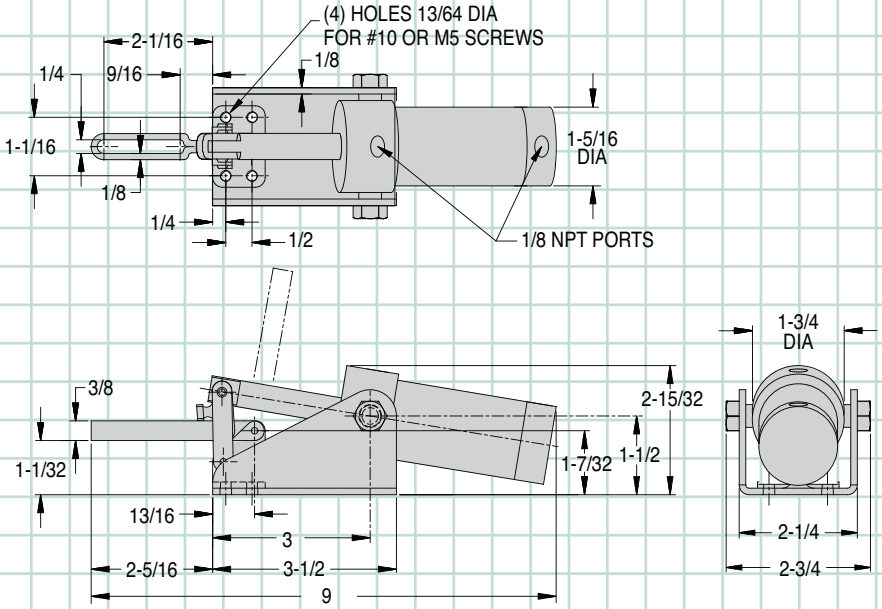

MANUFACTURING CO.
4200 Carr Lane Ct., P.O. Box 191970
St. Louis, Missouri 63119-7970 USA
Phone: 314-647-6200, FAX: 314-647-5736
Web Site: www.carrlane.com

AIR-POWERED CLAMPS

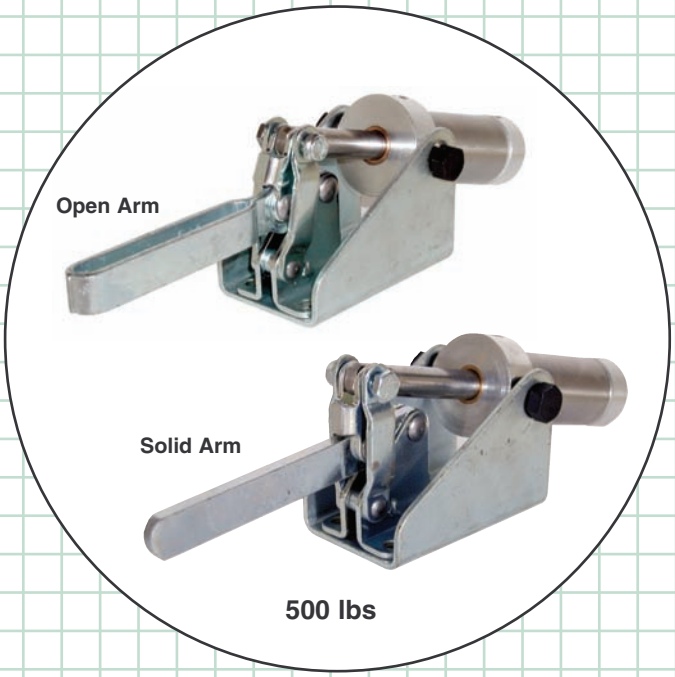

Also available with position sensing:

Please see our web catalog for more information.

CL-1000-PTC — Open Arm
CL-1001-PTC — Solid Arm

Popular medium-size hold-down clamp available with a solid arm, or an open arm for spindle adjustment. Toggle linkage provides high holding capacity and insures positive mechanical locking even if air pressure fails. Arm opens 92°. 1-1/4"-bore double-acting air cylinder with 1/8-NPT ports. Accepts any 5/16-18 short spindle and (2) CL-51610-TW flanged washers . . . see pages 78-82 to order. Solid-arm version accepts a CL-518000-BR bolt retainer. 100-psi maximum input air pressure. Shipping weight 3.0 lbs.

Holding capacity:	**500 lbs**
Clamping force at 100 psi, at center of arm:	**390 lbs**

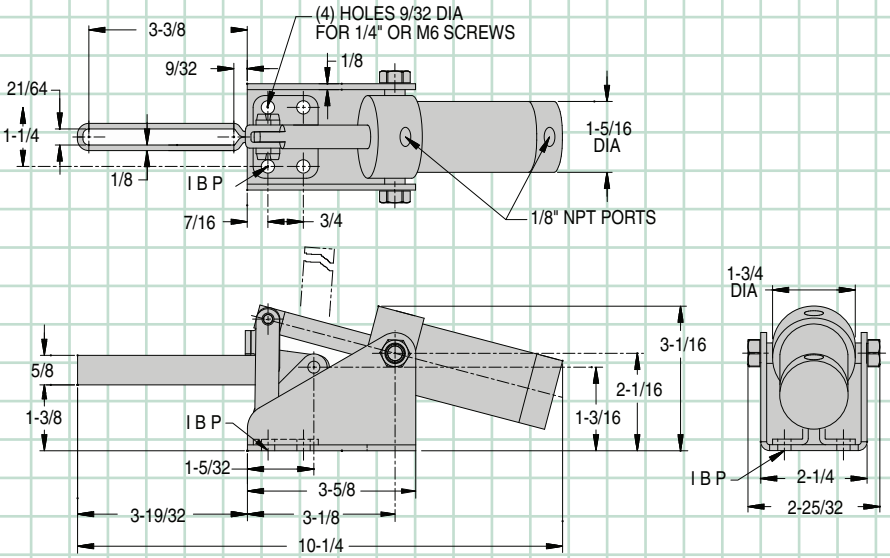

MANUFACTURING CO.
4200 Carr Lane Ct., P.O. Box 191970
St. Louis, Missouri 63119-7970 USA
Phone: 314-647-6200, FAX: 314-647-5736
Web Site: www.carrlane.com

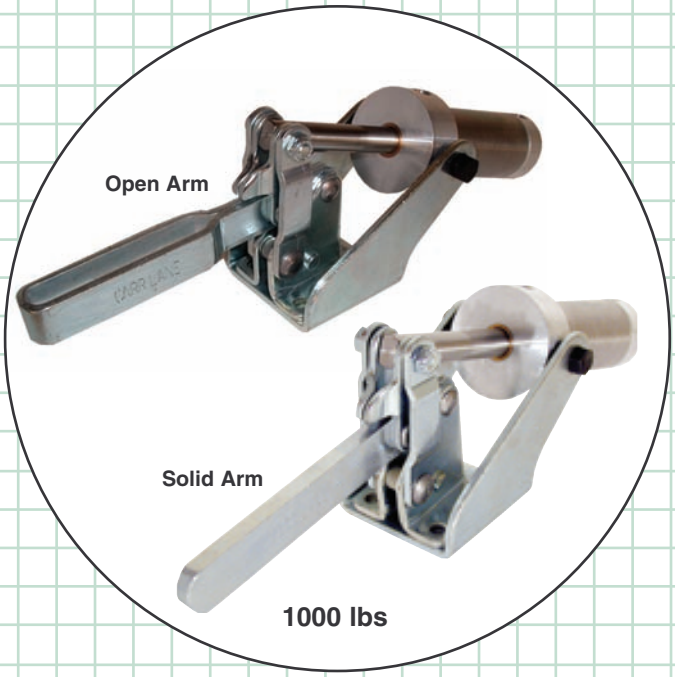

Also available with position sensing:

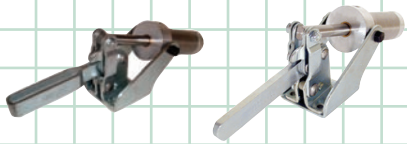

Please see our web catalog for more information.

CL-2000-PTC Open Arm
CL-2001-PTC Solid Arm

Extra-large hold-down clamp available with a solid arm, or an open arm for spindle adjustment. Toggle linkage provides high holding capacity and insures positive mechanical locking even if air pressure fails. Arm opens 83°. 1-3/4"-bore double-acting air cylinder with 1/4-NPT ports. Accepts any 1/2-13 spindle and (2) CL-1213-TW flanged washers . . . see pages 78-82 to order. Solid-arm version accepts a CL-113000-BR bolt retainer. 100 psi maximum input air pressure. Shipping weight 6.0 lbs.

Holding capacity:	**1000 lbs**
Clamping force at 100 psi, at center of arm	**680 lbs**

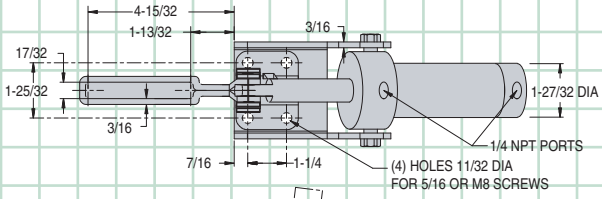

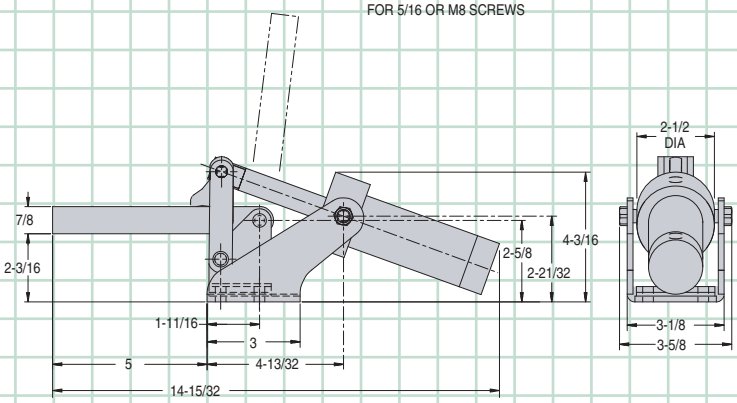

Carr Lane MANUFACTURING CO.
4200 Carr Lane Ct., P.O. Box 191970
St. Louis, Missouri 63119-7970 USA
Phone: 314-647-6200, FAX: 314-647-5736
Web Site: www.carrlane.com

AIR-POWERED CLAMPS

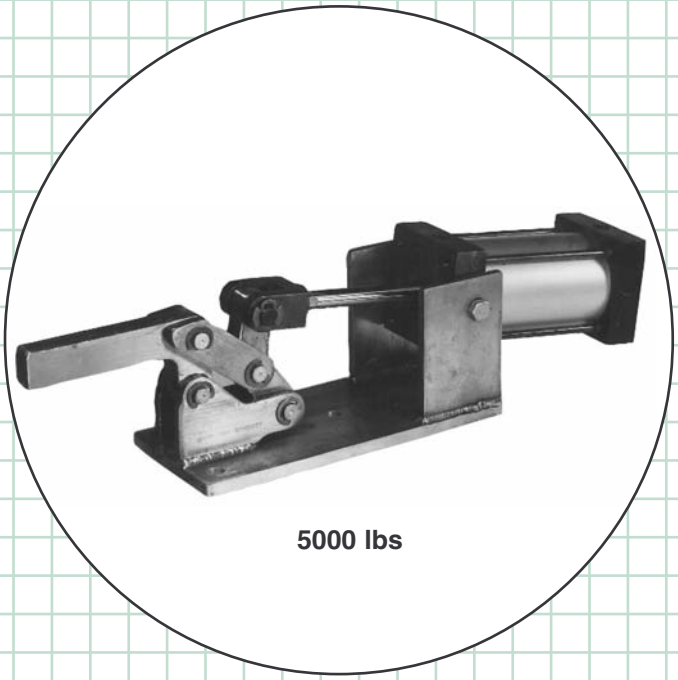

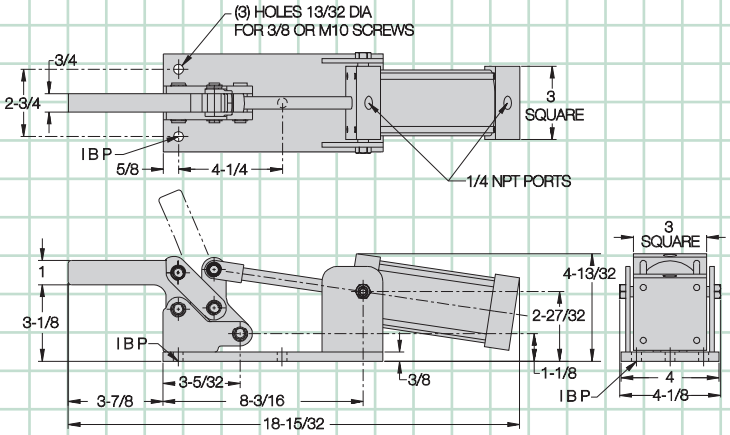

CL-3000-PTC

Heavy-duty hold-down clamp with a solid forged steel clamping arm. Toggle linkage provides high holding capacity and insures positive mechanical locking even if air pressure fails. Arm opens 83°. 2-1/2"-bore double-acting air cylinder with 1/4-NPT ports. 150-psi maximum input air pressure. Shipping weight 15.0 lbs.

Holding capacity:	**5000 lbs**
Clamping force at 100 psi, at center of arm:	**1600 lbs**

MANUFACTURING CO.
4200 Carr Lane Ct., P.O. Box 191970
St. Louis, Missouri 63119-7970 USA
Phone: 314-647-6200, FAX: 314-647-5736
Web Site: www.carrlane.com

(Rev. 11/09)

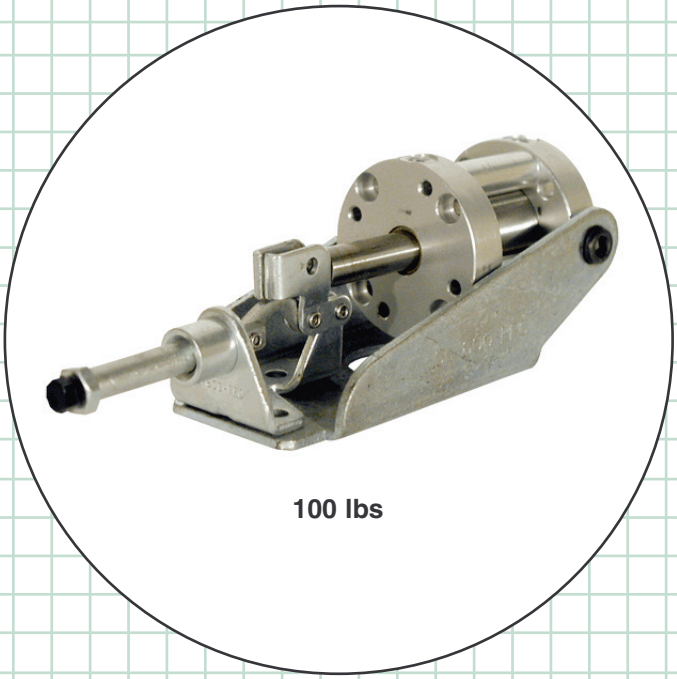

100 lbs

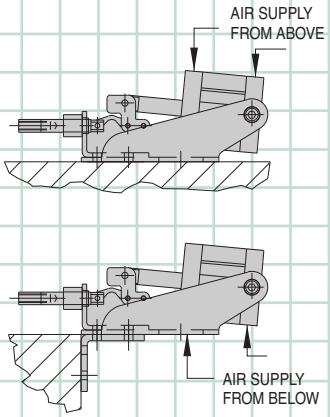

CL-600-PPC

Super-compact plunger clamp. Toggle linkage provides high holding capacity and insures positive mechanical locking even if air pressure fails. 7/16" plunger travel. 3/4"-bore double-acting air cylinder with #10-32 ports (see page 77 to order fittings). Supplied with #8-32 nylon hex-head spindle CL-832203-SA. 100-psi maximum input air pressure. Shipping weight 0.8 lbs. An optional bracket for side mounting is also available (CL-400-PCBR).

Holding capacity:	**100 lbs**
Clamping force at 100 psi:	**100 lbs**

Also available with position sensing:

Please se our web catalog for more information.

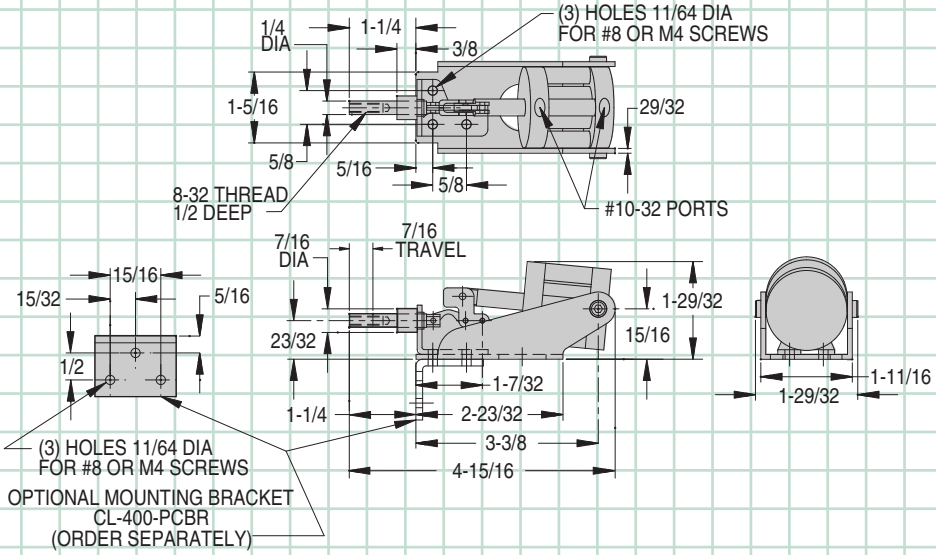

MANUFACTURING CO.
4200 Carr Lane Ct., P.O. Box 191970
St. Louis, Missouri 63119-7970 USA
Phone: 314-647-6200, FAX: 314-647-5736
Web Site: www.carrlane.com

AIR-POWERED CLAMPS

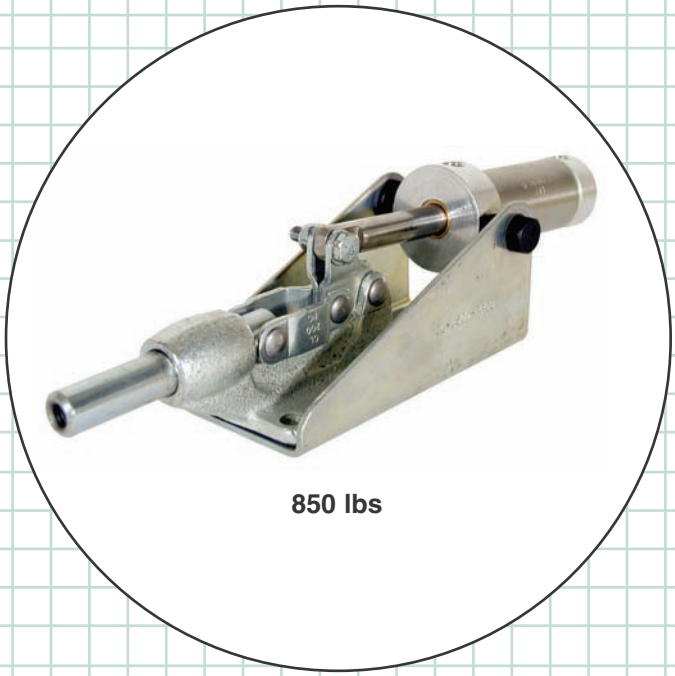

850 lbs

Also available with position sensing:

Please see our web catalog for more information.

CL-1500-PPC

Larger-size plunger clamp. Toggle linkage provides high holding capacity and insures positive mechanical locking even if air pressure fails. 1" plunger travel. 1-1/4"-bore double-acting air cylinder with 1/8-NPT ports. Accepts any 3/8-16 spindle . . . see pages 78-81 to order. 100-psi maximum input air pressure. Shipping weight 3.2 lbs.

Holding capacity:	**850 lbs**
Clamping force at 100 psi:	**430 lbs**

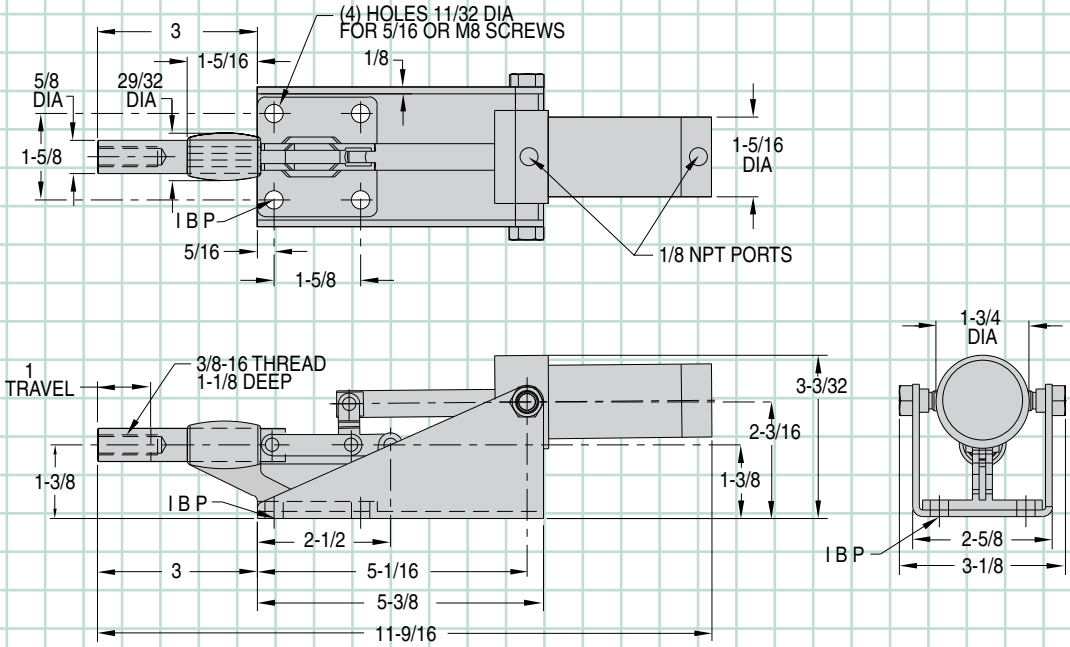

MANUFACTURING CO.
4200 Carr Lane Ct., P.O. Box 191970
St. Louis, Missouri 63119-7970 USA
Phone: 314-647-6200, FAX: 314-647-5736
Web Site: www.carrlane.com

AIR-POWERED CLAMPS

CLAMPING VALVES*

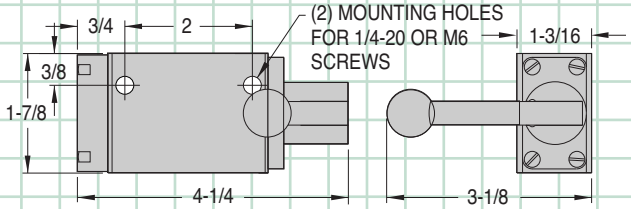

CL-14-PCAV
Versatile two-position, four-way valve for simple and convenient clamp control. Five 1/4-NPT ports. 150 psi maximum pressure.

CHECK VALVES*

CLR-224-ACV
Allows air to flow in one direction only. 1/4-NPT male x 2.

EXHAUST MUFFLERS*

CL-14-PCEM
Durable, compact, sintered-bronze exhaust muffler. 1/4-NPT male.

AIR FITTINGS*

Quick-Disconnect Coupler

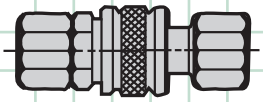

CL-14-PCQD
Both halves, 1/4-NPT female
CL-14-PCQDS
Female socket, 1/4-NPT female
CL-14-PCQDP
Male plug, 1/4-NPT female
(Industrial Interchange)

Adapter

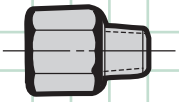

CL-1014-PCA
#10-32 female x 1/4-NPT male
CL-1418-PCA
1/4-NPT female x 1/8-NPT male
CL-3814-PCA
3/8-NPT female x 1/4-NPT male

Hex Nipple

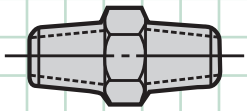

CL-10-PCHN
#10-32 male x 2
CL-14-PCHN
1/4-NPT male x 2
CL-38-PCHN
3/8-NPT male x 2
CL-3814-PCHN
3/8-NPT male x 1/4-NPT male

Coupling

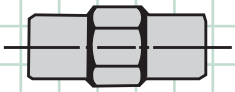

CL-10-PCCP
#10-32 female x 2
CL-14-PCCP
1/4-NPT female x 2

Tubing Connector

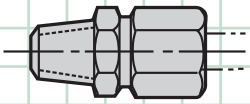

CL-1810-PCTC
1/8-OD tube x #10-32 male
CL-14-PCTC
1/4-OD tube x 1/4-NPT male
(Includes compression sleeve and nut)

Street Elbow

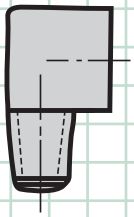

CL-14-PCSE
1/4-NPT female x 1/4-NPT male

Banjo Elbow

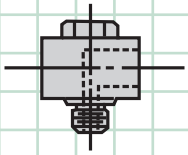

CL-10-PCBE
#10-32 female x #10-32 male

Tee

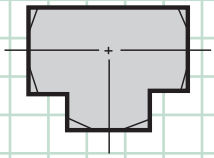

CL-10-PCTE
#10-32 female x 3
CL-14-PCTE
1/4-NPT female x 3

Branch Tee

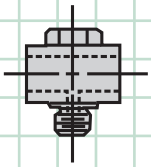

CL-10-PCBT
#10-32 female x 2,
#10-32 male

Cross

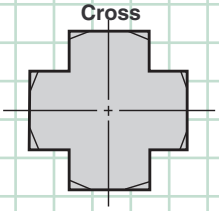

CL-14-PCCR
1/4-NPT female x 4

* Do not use in high-pressure hydraulic lines.

Carr Lane MANUFACTURING CO.
4200 Carr Lane Ct., P.O. Box 191970
St. Louis, Missouri 63119-7970 USA
Phone: 314-647-6200, FAX: 314-647-5736
Web Site: www.carrlane.com

TOGGLE CLAMP ACCESSORIES

HEX-HEAD SPINDLES

Simple spindle design provides maximum clamping force. Fully threaded for maximum adjustment range. Assembly includes two jam nuts. Available in thread sizes from #8-32 to 5/8-11 (M4 to M16 in metric).

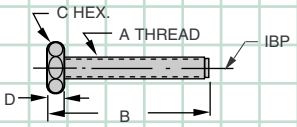

STEEL (USA)

PART NO.	A	B	C	D
CL-316112-SA	#10-32	1-3/8	5/16	1/8
CL-14112-SA	1/4-20	1-11/16	7/16	3/16
CL-14200-SA		2-3/16		
CL-516212-SA	5/16-18	2-11/16	1/2	3/16
CL-38314-SA	3/8-16	3-1/4	9/16	1/4
CL-12314-SA	1/2-13	3-5/16	3/4	5/16
CL-58438-SA	5/8-11	4-3/8	15/16	3/8

VINYL-DIPPED STEEL (USA)

CL-832208-FC	#8-32	1-3/16	1/4	1/8
CL-14100-SA	1/4-20	1	7/16	3/16
CL-14208-SA		1-1/2		

STAINLESS STEEL (USA)

CL-83234-SA-S	#8-32	7/8	1/4	1/8
CL-832203-SA-S		1-1/8		
CL-316100-SA-S	#10-32	1-1/8	5/16	1/8
CL-14112-SA-S	1/4-20	1-11/16	7/16	3/16
CL-516200-SA-S	5/16-18	1-15/16	1/2	3/16
CL-516212-SA-S		2-11/16		
CL-38212-SA-S	3/8-16	2-1/2	9/16	1/4
CL-38314-SA-S		3-1/4		
CL-12234-SA-S	1/2-13	2-13/16	3/4	5/16

NYLON (USA)

CL-832203-SA	#8-32	7/8	1/4	1/8

STEEL (METRIC)

PART NO.	A	B	C	D
CLM-530-SA	M5	1.32	8mm	.14
CLM-640-SA	M6	1.75	10mm	.18
CLM-650-SA		2.15		
CLM-850-SA	M8	2.19	13mm	.22
CLM-865-SA		2.78		
CLM-1070-SA	M10	3.03	17mm	.28
CLM-1275-SA	M12	3.27	19mm	.31
CLM-16100-SA	M16	4.33	24mm	.39

STAINLESS STEEL (METRIC)

CLM-416-SA-S	M4	.75	7mm	.12
CLM-425-SA-S		1.10		
CLM-530-SA-S	M5	1.32	8mm	.14
CLM-640-SA-S	M6	1.75	10mm	.18
CLM-650-SA-S		2.15		
CLM-850-SA-S	M8	2.19	13mm	.22
CLM-865-SA-S		2.78		
CLM-1070-SA-S	M10	3.03	17mm	.28

NYLON (METRIC)

CLM-416-SA	M4	.75	7mm	.12

Carr Lane MANUFACTURING CO.
4200 Carr Lane Ct., P.O. Box 191970
St. Louis, Missouri 63119-7970 USA
Phone: 314-647-6200, FAX: 314-647-5736
Web Site: www.carrlane.com

FLAT-CUSHION SPINDLES

This is the standard spindle supplied with most clamps. Molded neoprene tip provides medium clamping force with some compensation for part-size variation. Also provides scratchfree clamping. Neoprene cushion has a durometer hardness of 70 shore A, and an operating temperature range of -40ºF to 220ºF. Spindle is fully threaded for maximum adjustment range. Assembly includes two jam nuts.

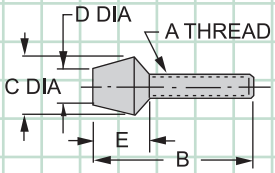

STEEL (USA)

PART NO.	A	B	C DIA	D	E
CL-316112-FC	#10-32	1-3/8	9/16	7/16	7/16
CL-14112-FC	1/4-20	1-5/8	5/8	13/32	5/8
CL-14200-FC		2-1/8			
CL-518208-FC	5/16-18	2-1/4	3/4	1/2	3/4
CL-516212-FC		3			
CL-38212-FC	3/8-16	2-1/2	13/16	5/8	7/8
CL-38314-FC		3-1/2			

FLAT-CUSHION SPINDLES (QUICK ADJUSTING)

Same as the Flat-Cushion Spindles above, except with two knurled nuts, instead of hex jam nuts, for convenient hand tightening. Use for quick spindle adjustment in applications where high-torque tightening with a wrench is not required.

NEW!

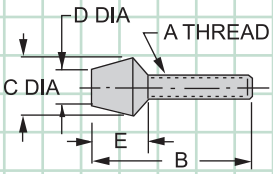

STEEL (USA)

PART NO.	A	B	C DIA	D	E
CL-316112-FCQA	#10-32	1-3/8	9/16	7/16	7/16
CL-14112-FCQA	1/4-20	1-5/8	5/8	13/32	5/8
CL-14200-FCQA		2-1/8			
CL-518208-FCQA	5/16-18	2-1/4	3/4	1/2	3/4
CL-516212-FCQA		3			
CL-38212-FCQA	3/8-16	2-1/2	13/16	5/8	7/8
CL-38314-FCQA		3-1/2			

POLYURETHANE FLAT CUSHIONS

NEW!

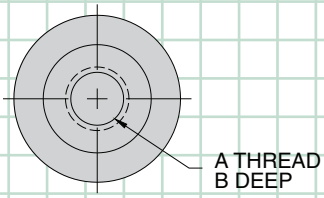

Polyurethane cushions are tougher and slightly harder than standard neoprene cushions. Ideal when greater clamping force is required while still providing scratchfree clamping and some compensation for part-size variation. Molded-in stainless steel insert provides superior thread strength. Ideal for making custom-length Flat Cushion Spindles by inserting a threaded stud. Polyurethane cushion has a hardness 85 Shore A, operating temperature range -90ºF to 200ºF.

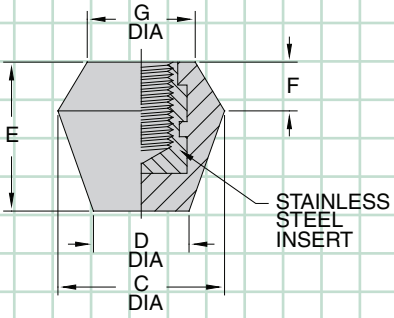

STAINLESS (USA)

PART NO.	A	B	C DIA	D DIA	E	F	G DIA
CL-1032-FCP	#10-32	.19	.56	.44	.53	.14	.32
CL-1420-FCP	1/4-20	.30	.63	.47	.63	.22	.38
CL-51618-FCP	5/16-18	.33	.75	.50	.75	.21	.46
CL-3816-FCP	3/8-16	.38	.81	.63	.88	.21	.52

STAINLESS (METRIC)

PART NO.	A	B	C DIA	D DIA	E	F	G DIA
CLM-5-FCP	M5	.19	.56	.44	.53	.14	.32
CLM-6-FCP	M6	.24	.63	.47	.63	.22	.38
CLM-8-FCP	M8	.30	.75	.50	.75	.21	.46
CLM-10-FCP	M10	.35	.81	.63	.88	.21	.52

Carr Lane MANUFACTURING CO.
4200 Carr Lane Ct., P.O. Box 191970
St. Louis, Missouri 63119-7970 USA
Phone: 314-647-6200, FAX: 314-647-5736
Web Site: www.carrlane.com

TOGGLE CLAMP ACCESSORIES

CONE-CUSHION SPINDLES

Excellent for clamping into drilled holes, slots, or corners. Molded neoprene tip provides medium clamping force with some compensation for part-size variation. Also provides scratchfree clamping. Neoprene cushion has a durometer hardness of 70 shore A, and an operating temperature range of -40ºF to 220ºF. Spindle is fully threaded for maximum adjustment range. Assembly includes two jam nuts.

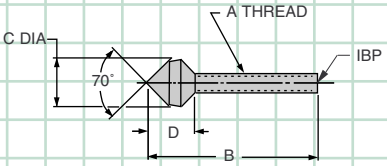

STEEL (USA)

PART NO.	A	B	C DIA	D
CL-316112-CC	#10-32	1-3/8	9/16	7/16
CL-14112-CC	1/4-20	1-5/8	5/8	5/8
CL-14200-CC		2-1/8		5/8
CL-516212-CC	5/16-18	3	3/4	3/4
CL-38314-CC	3/8-16	3-1/2	13/16	7/8

SF SWIVEL-FOOT SPINDLES

Swivel foot provides full contact on uneven or sloped surfaces. Assembly includes two jam nuts.

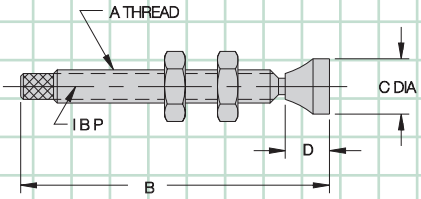

STEEL (USA)

PART NO.	A	B	C DIA	D
CL-14112-SF	1/4-20	1-3/4	1/2	3/8
CL-14200-SF		2-1/4		
CL-516212-SF	5/16-18	2-3/4	9/16	7/16
CL-38314-SF	3/8-16	3-1/2	5/8	1/2

SSC SWIVEL SCREW CLAMPS

Screw clamp with patented removable, interchangeable swivel foot, available in many sizes and varieties. Add "N" to part no. for delrin foot, e.g. CL-23-SSCN. See pages 78-79 of the tooling-component section for additional lengths and foot options. Order two jam nuts separately.

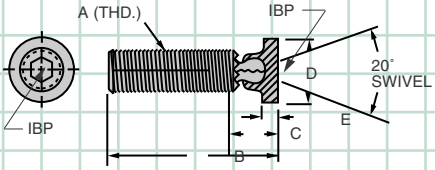

STEEL (USA)

PART NO.	JAM NUT PART NO. (2 REQD)	A	B	C	D DIA	E
CL-23-SSC	CL-4-JN	1/4-20	1-19/32	23/64	3/8	1/8
CL-27-SSC	CL-5-JN	5/16-18	2-3/32	27/64	1/2	5/32
CL-43-SSC	CL-6-JN	3/8-16	3-1/8	1/2	9/16	3/16
CL-44-SSC	CL-8-JN	1/2-13	4-1/16	17/32	3/4	3/16
CL-46-SSC	CL-10-JN	5/8-11	5-3/64	21/32	15/16	7/32

STEEL (METRIC)

CLM-23-SSC	CLM-6-JN	M6	1.67	.36	3/8	1/8
CLM-27-SSC	CLM-8-JN	M8	2.06	.42	1/2	5/32
CLM-32-SSC	CLM-10-JN	M10	3.08	.62	9/16	3/16
CLM-36-SSC	CLM-12-JN	M12	4.00	.53	3/4	3/16
CLM-40-SSC	CLM-16-JN	M16	4.97	.66	15/16	7/32

STAINLESS STEEL (USA)

CL-23-SSC-S	CL-4-JN-S	1/4-20	1-19/32	23/64	3/8	1/8
CL-27-SSC-S	CL-5-JN-S	5/16-18	2-3/32	27/64	1/2	5/32
CL-43-SSC-S	CL-6-JN-S	3/8-16	3-1/8	1/2	9/16	3/16

Carr Lane MANUFACTURING CO.
4200 Carr Lane Ct., P.O. Box 191970
St. Louis, Missouri 63119-7970 USA
Phone: 314-647-6200, FAX: 314-647-5736
Web Site: www.carrlane.com

SL SPRING-LOADED SPINDLES

Clamps with strong spring force to compensate for varying part thicknesses. Excellent for clamping castings that vary slightly in size. To install, weld bolt retainer to clamping arm. Assembly includes two jam nuts, a die spring, and a bolt retainer.

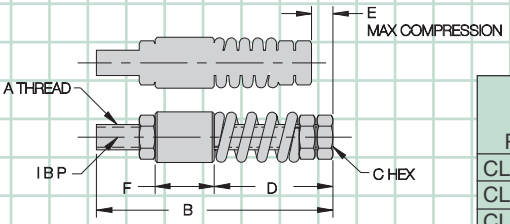

STEEL (USA)

PART NO.	A	B	C	D MIN	D MAX	E	FORCE AT "E" (lbs)	F
CL-14200-SL	1/4-20	2-1/4	7/16	1-9/32	1-3/8	1/4	50	5/8
CL-516212-SL	5/16-18	2-3/4	1/2	1-11/16	1-7/8	1/4	100	5/8
CL-38314-SL	3/8-16	3-1/2	9/16	1-3/4	2-9/32	5/16	200	7/8

LIFT YOUR LOAD SAFELY WITH CARR LANE HOIST RINGS

MADE IN USA

NEW! Extra-large Swivel Hoist Rings with our patented EZ-Torque™ system that allows tightening several smaller bolt heads with a standard torque wrench instead of tightening one large bolt with a special tool. Swivel Hoist Rings pivot 180 degrees and swivel 360 degrees simultaneously to allow lifting from any direction.

Carr Lane's lot number marking guarantees quality by providing traceability for:

- ***Date of manufacture***
- ***Material certification***
- ***Magnaflux testing certification***
- ***Heat treatment certification***

Pivoting hoist rings, swivel hoist rings, side-pull swivel hoist rings and lifting eyes are some of the types offered by Carr Lane, ranging from low profile versions to heavy-duty, extra-large types with load capacities up to 250,000 lbs.

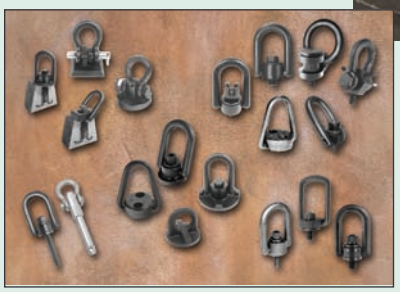

From large to small, in dozens of types, Carr Lane has the hoist ring for your application.

Visit CarrLane.com and search our online catalog for hoist rings and any of our 100,000 other products.

ISO 9001-2008 CERTIFIED

Carr Lane... The Green Team

Carr Lane® MANUFACTURING CO.
4200 Carr Lane Ct., P.O. Box 191970
St. Louis, Missouri 63119-7970 USA
Phone: 314-647-6200, FAX: 314-647-5736
Web Site: www.carrlane.com

TOGGLE CLAMP ACCESSORIES

TW — FLANGED WASHERS

Two flanged washers required per clamp

For open-arm clamps. Use two flanged washers to mount spindle, one above the arm and one below.

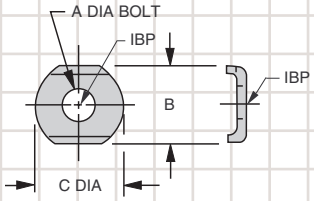

STEEL

PART NO.	A	B	C DIA
CL-832-TW	#8-32 or M4	7/16	15/32
CL-3166-TW	#10-32 or M5	1/2	9/16
CL-147-TW	1/4-20 or M6	9/16	5/8
CL-148-TW		19/32	11/16
CL-51610-TW	5/16-18 or M8	3/4	7/8
CL-3811-TW	3/8-16 or M10	15/16	1
CL-1213-TW	1/2-13 or M12	1-5/32	1-1/4
CL-5811-TW	5/8-11or M16	1-3/8	1-15/32

STAINLESS STEEL

PART NO.	A	B	C DIA
CL-832-TW-S	#8-32 or M4	7/16	15/32
CL-3166-TW-S	#10-32 or M5	1/2	9/16
CL-147-TW-S	1/4-20 or M6	9/16	5/8
CL-148-TW-S		19/32	11/16
CL-51610-TW-S	5/16-18 or M8	3/4	7/8
CL-3811-TW-S	3/8-16 or M10	15/16	1

BR & S — BOLT RETAINERS

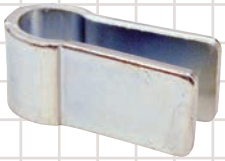

BR
For VTC clamps

S
For TC clamps

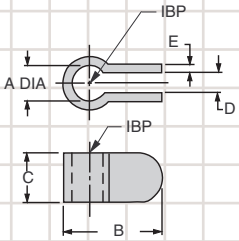

BR (FOR HTC & VTC CLAMPS)

PART NO.	SPINDLE SIZE	A DIA	B	C	D	E
CL-142000-BR	1/4-20 or M6	9/32	1-1/4	1/2	3/16	3/32
CL-518000-BR	5/16-18 or M8	21/64	1-1/4	5/8	1/4	3/32
CL-316000-BR	3/8-16 or M10	17/32	1-1/2	3/4	5/16	1/8
CL-113000-BR	1/2-13 or M12	9/16	1-5/8	7/8	3/8	1/8
CL-511000-BR	5/8-11 or M16	11/16	1-7/8	1-1/4	3/8	1/8

For solid-arm clamps. Weld on bolt retainer at desired arm length and spindle angle.

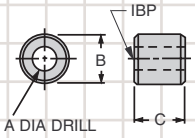

S (FOR TC CLAMPS)

PART NO.	SPINDLE SIZE	A DIA	B DIA	C
CL-1458-S	1/4-20 or M6	.257	5/8	5/8
CL-51658-S	5/16-18 or M8	.316	5/8	5/8
CL-3878-S	3/8-16 or M10	.397	3/4	7/8

PCBR — MOUNTING BRACKETS

Handy bracket for side-mounting small clamps. One reversible bracket fits several clamps.

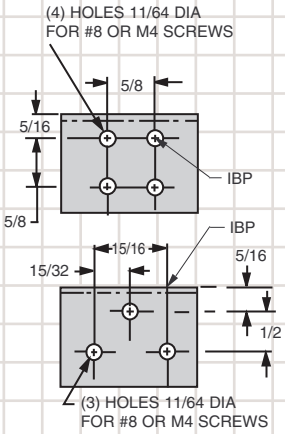

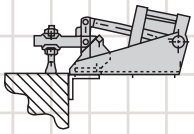

Downholding

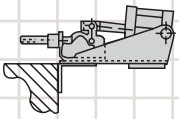

Push/Pull

PART NO.	FITS DOWNHOLDING CLAMPS	FITS PUSH CLAMPS
CL-400-PCBR	CL-150-VTC	CL-50-SPC
	CL-400-PTC	CL-600-PPC

Carr Lane MANUFACTURING CO.
4200 Carr Lane Ct., P.O. Box 191970
St. Louis, Missouri 63119-7970 USA
Phone: 314-647-6200, FAX: 314-647-5736
Web Site: www.carrlane.com

PRECISION DRILL JIG BUSHINGS

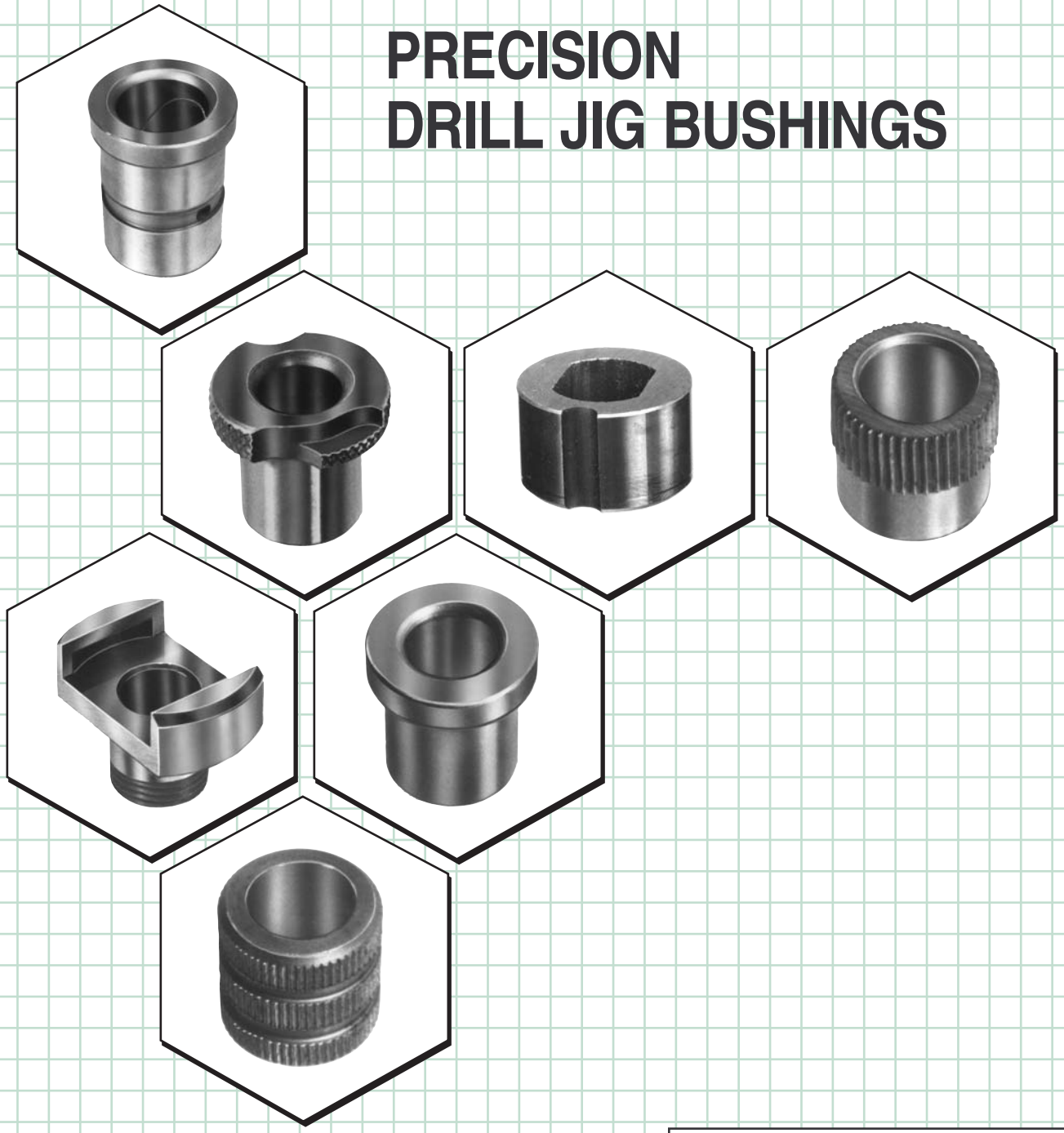

Authorized Distributor:

MANUFACTURING CO.
4200 Carr Lane Ct., P.O. Box 191970
St. Louis, Missouri 63119-7970 USA
Phone: 314-647-6200, FAX: 314-647-5736
Web Site: www.carrlane.com

PRINTED IN U.S.A. © COPYRIGHT 2008 CARR LANE MANUFACTURING CO. 11952-703

WHAT MAKES A CARR LANE DRILL BUSHING BETTER?

1 TOP QUALITY

Carr Lane drill bushings are all precision honed and ground, the finest quality available. They exceed all ANSI drill-bushing standards. Unlike some of our competitors, we manufacture only first-quality drill bushings, never "economy grade."

2 FAST DELIVERY

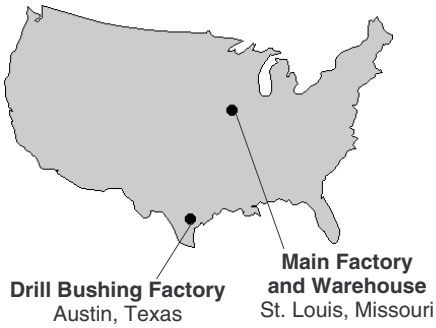

Our nationwide network of stocking distributors, plus huge inventories at two warehouse locations, guarantees same-day shipment for standard bushings. In addition, our quick-response manufacturing capabilities allow us to ship almost all special and modified bushings in less than 10 days.

3 ECONOMICAL PRICES

As you expect with all Carr Lane products, our drill-bushing prices are the most competitive around. Our production volumes and advanced manufacturing techniques mean excellent value for you.

Carr Lane®
MANUFACTURING CO.
4200 Carr Lane Ct., P.O. Box 191970
St. Louis, Missouri 63119-7970 USA
Phone: 314-647-6200, FAX: 314-647-5736
Web Site: www.carrlane.com

INDEX

Bushing Selection ..... p. 2-3
Installation and Technical Data ..... p. 4-5
Counterbore Data ..... p. 6

P Press Fit p. 9-13	**H** Head Press Fit p. 14-18	**SP** Serrated Press Fit p. 19-20
SF Slip/Fixed Renewable p. 21-25	**FM** Flat Milled Renewable p. 26-27	**L** Liner p. 28-30
HL Head Liner p. 31-32	**UL** Locking Liner p. 33	Lockscrews and Clamps p. 34-35
CH Chip Breaker p. 36-37	**DC** Directed Coolant p. 38-39	Oil Groove p. 40-42
DG Diamond Groove p. 43-44	**SG** Serrata Groove p. 45	**ULD** Diamond Knurl Locking Liner p. 46
EZ EZ Cast p. 47	**GD** Gun Drill p. 54-56	**TB** Template p. 48-51
CB Circuit Board (Please see our web catalog)	**A** Air Feed p. 57-68	Air-Feed Accessories p. 69-72

CarrLane® MANUFACTURING CO.
4200 Carr Lane Ct., P.O. Box 191970
St. Louis, Missouri 63119-7970 USA
Phone: 314-647-6200, FAX: 314-647-5736
Web Site: www.carrlane.com

BUSHING SELECTION

USA				METRIC			
P	20	8	.1250	PM	8	12	4.50
Type	OD in 64ths of an inch	Length in 16ths of an inch	ID as 4-place decimal inch	Type	OD in mm	Length in mm	ID as 2-place decimal mm

PRESS FIT:

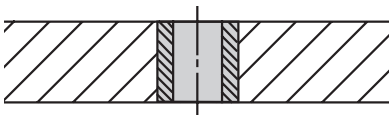

Types **P, PC** (carbide), and **PM** (metric). This is the most-popular and least-expensive drill bushing. P bushings are permanently pressed into the jig plate, usually flush with the top surface. They are generally used for single-step drilling or reaming operations when you do not expect to replace bushings during the tooling's lifetime. P bushings can be mounted closer together than headed bushings, but offer less resistance to heavy axial loads.

HEAD PRESS FIT:

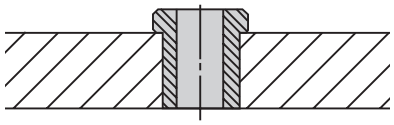

Types **H**, **HC** (carbide), and **HM** (metric). Similar to a P bushing, but with a head to resist heavy axial loads. H bushings are permanently pressed into the jig plate. They are generally used for single-step drilling or reaming operations when you do not expect to replace bushings during the tooling's lifetime. The head can be left exposed, or recessed by counterboring the installation hole. Note: The "length" listed for a USA head-press-fit bushing refers to its length under the head, while the metric version's "length" is its overall length.

SERRATED PRESS FIT:

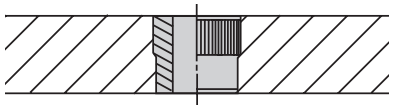

Types **SP** and **SPM** (metric). Similar to a P bushing, but with top serrations to prevent rotation in soft materials. Recommended in high-torque situations for materials such as magnesium, aluminum, masonite, or wood. Finish-ground OD ensures accurate ID location. Serrations also resist axial force to prevent pushing the bushing through the jig plate.

SLIP/FIXED RENEWABLE:

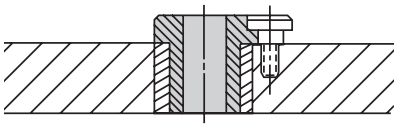

Types **SF, SFC/SC/FC** (carbide), and **SFM** (metric). Replaceable bushing generally used with a liner bushing and lockscrew. Use when you expect to replace bushings during the tooling's lifetime, or when you want to switch bushings to perform multi-step operations with the same tooling. SF bushings combine the benefits of older S-type slip-renewable and F-type fixed-renewable bushings: One side has a small recess for fixed mounting; the other has a locking recess that allows the bushing to slip down, then lock in place by rotating it. S and F types are now obsolete (except in carbide) and combination SF bushings will be furnished at no extra charge.

FLAT MILLED RENEWABLE:

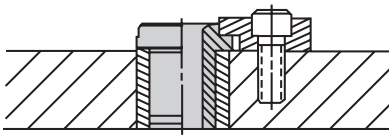

Types **FM** and **FMC** (carbide). Replaceable bushing used for extra resistance to rotational forces under harsh conditions. This bushing, generally used with a liner, has a milled locking flat to allow fastening securely with a flat clamp. FM bushings also have a standard recess on the other side to allow using a lockscrew instead.

LINER:

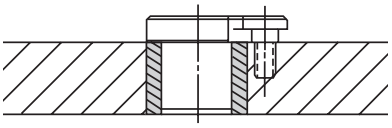

Types **L** and **PM** (metric). Liners are permanent bushings used to hold renewable drill bushings. The liner's ID has a precise sliding fit with the renewable bushing's OD. The hardened liner accurately locates the renewable bushing and protects the jig plate from wear caused by frequent bushing replacement. Note: Metric liner bushings are the same as metric press-fit bushings.

HEAD LINER:

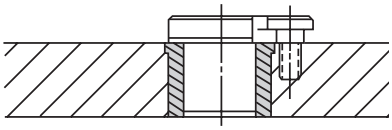

Types **HL** and **HM** (metric). Similar to an L bushing, but with a head to resist heavy axial loads. Head liners are permanent bushings used to hold renewable drill bushings. The head liner's ID has a precise sliding fit with the renewable bushing's OD. The hardened head liner accurately locates the renewable bushing and protects the jig plate from wear caused by frequent bushing replacement. Note: The "length" listed for a head liner refers to its overall length, not its length under the head. Metric head-liner bushings are the same as metric head-press-fit bushings.

UN-A-LOK® LINER:

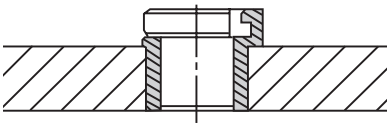

Types **UL** and **ULM** (metric). Similar to an HL head liner, but incorporating a special locking tab that eliminates the need for a lockscrew. Un-A-Lok® liners are permanent bushings used to hold SF renewable drill bushings (on the "slip" side only, not the "fixed" side). Although slightly more expensive than a head liner plus a lock screw, installation time is dramatically reduced.

CHIP BREAKER:

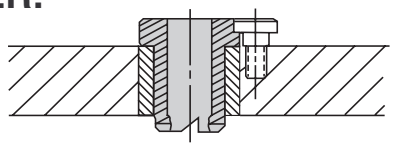

Types **CH** and **CHM** (metric). Similar to an SF renewable bushing, but with specially designed chip-breaking notches on the drill-exit end. Use to break up chips from tough, stringy materials, to reduce friction and heat buildup. Reduces bushing wear at the drill-exit end and reduces the chance of tool or workpiece damage. A chip-breaker bushing should extend beyond its liner to allow chips to escape. Chip breakers are also available on other bushing types such as P, H, and DC.

Carr Lane®
MANUFACTURING CO.
4200 Carr Lane Ct., P.O. Box 191970
St. Louis, Missouri 63119-7970 USA
Phone: 314-647-6200, FAX: 314-647-5736
Web Site: www.carrlane.com

(12/03)

BUSHING SELECTION

DIRECTED COOLANT:

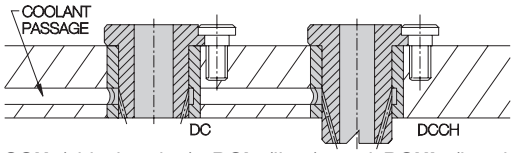

Types **DC, DCCH** (chip breaker), **DCL** (liner), and **DCHL** (head liner). Similar to an SF renewable bushing, but with passages to direct coolant to the cutting area. This design is particularly good for washing away chips, especially when ordered as the combination Directed Coolant Chip Breaker (DCCH). DC bushings require special liners, DCL or DCHL, to direct coolant from a drilled manifold passage to the holes in the bushing's OD wall.

OIL GROOVE:

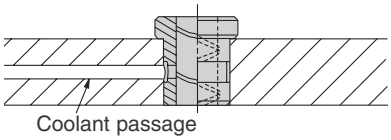

Oil grooves are available on most drill-bushing types, including P, H, and SF. Use when you need complete drill lubrication and cooling, such as when drilling hardened steel. Oil grooves are specially designed coolant passageways in the bushing's ID wall. Choose from 25 different groove styles. End wipers are also available, to keep out dirt and chips.

DIAMOND GROOVE:

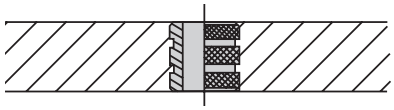

Types **DG** and **DGM** (metric). A bushing for cast-in-place or potted installation. Diamond-knurled OD provides superior holding strength against both rotational and axial forces. Since the bushing's OD is not ground, keep the ID accurately located during casting or potting to ensure accuracy in the finished tool.

SERRATA GROOVE:

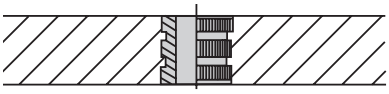

Type **SG.** Can be cast in place or potted, just as a diamond-groove bushing, or can also be pressed into an installation hole. Straight knurl provides less resistance to axial loads than the diamond knurl on a DG bushing. Since the bushing's OD is not ground, keep the ID accurately located during casting or potting to ensure accuracy in the finished tool.

DIAMOND-KNURL UN-A-LOK® LINER:

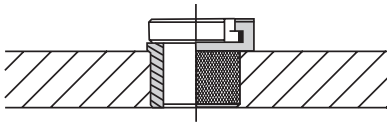

Types **ULD** and **ULDM** (metric). A liner for cast-in-place or potted installation, used to hold SF renewable drill bushings. Un-A-Lok® liners incorporate a special locking tab that eliminates the need for a lockscrew. Holds only the "slip" side of an SF bushing, not the "fixed" side. Diamond-knurled OD provides superior holding strength against both rotational and axial forces. Since the bushing's OD is not ground, keep the ID accurately located during casting or potting to ensure accuracy in the finished tool.

EZ CAST LINER:

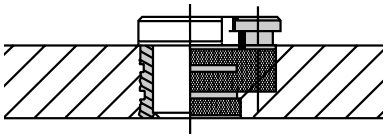

Type **EZ**. Another liner for cast-in-place or potted installation, used to hold SF renewable drill bushings. Unlike diamond-knurl unilock liners, EZ-cast liners hold either the "slip" or "fixed" side of an SF bushing, since they include an integral lockscrew holder. Diamond-knurled OD provides superior holding strength against both rotational and axial forces. Since the bushing's OD is not ground, keep the ID accurately located during casting or potting to ensure accuracy in the finished tool.

GUN DRILL:

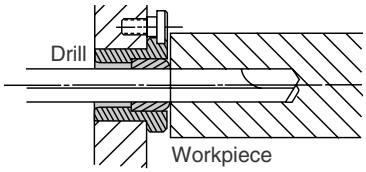

Types **GD, GDL** (liner), and **GDI** (insert). Drill bushings for gun-drilling machines, such as Eldorado, Drillmation, DeHoff, and Lahr. Gun drill bushings are similar to SF renewable bushings, but with the drill bearing at the bushing's head end. Depending on the gun-drilling machine, bushings are either one-piece or two-piece (a liner and an insert).

TEMPLATE:

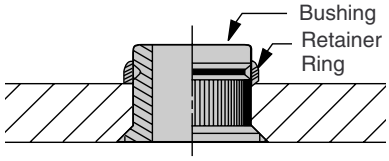

Type **TB.** An economical bushing designed for thin template jig plates from 1/16- to 3/8-inch thick. Bushings are held in place by a retainer ring. The OD serrations prevent the bushing from spinning. Bushings can be removed and reused by breaking the aluminum retainer ring (extra retainer rings available).

CIRCUIT BOARD:

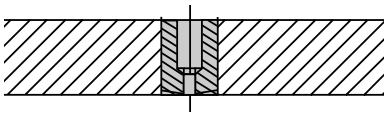

Types **CB** and **CBC** (carbide). Headless and head-type bushings made especially for circuit-board drilling machines. Available for Electro-Mechano, Excellon, Waco, Digital, Nationwide, Edlund, Tektronix, Leland-Gifford, Palomar, Hughes, Rapidrill, and Reliable drilling machines.

AIR-FEED DRILL:

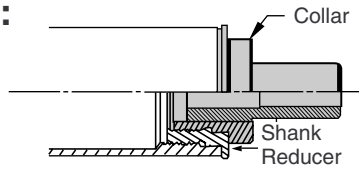

Type **A**. Drill-bushing shanks, collars, adaptors, and locking accessories for air-feed drills, tappers, and back-spotfacers. Available for all standard drill motors, including Gardner-Denver, Keller, Aro, Buckeye, Quackenbush, Desoutter, and Ingersoll-Rand.

Carr Lane MANUFACTURING CO.
4200 Carr Lane Ct., P.O. Box 191970
St. Louis, Missouri 63119-7970 USA
Phone: 314-647-6200, FAX: 314-647-5736
Web Site: www.carrlane.com

INSTALLATION AND TECHNICAL DATA

RECOMMENDED CHIP CLEARANCE:

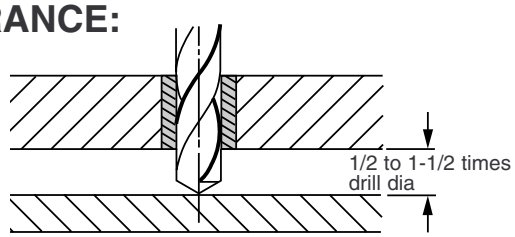

To minimize drill bending and maximize hole accuracy, mount drill bushings as close to the workpiece as possible while still allowing adequate chip clearance. The necessary clearance depends on workpiece material and chip stringiness. For example, cast iron, with fine chips requires about 1/2 times drill diameter for chip clearance. Materials that produce long, stringy chips, such as cold-rolled steel and aluminum, require at least one-drill-diameter clearance. To reduce clearance even with long, stringy chips, exit-end chip breakers are available…see pages 42-43.

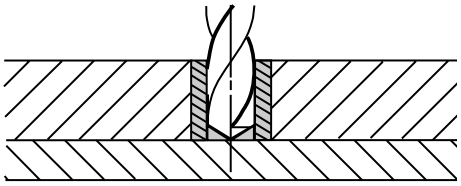

Direct workpiece contact is usually not recommended. Chips can escape only up through the drill's flutes, drill-bearing length is shortened by the drill point's length, and drill-withdrawal burrs can raise the jig plate. Direct contact may be necessary, though, for maximum bearing length when drilling sloped surfaces (see below). Also, reamer bushings can be mounted much closer than drill bushings, due to much finer chips, for more-accurate hole finishing.

SLOPED WORKPIECE SURFACES:

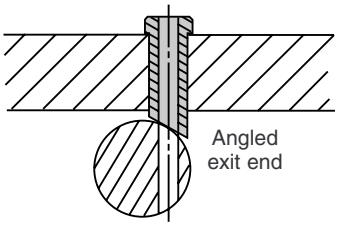

Whenever the drilling axis is not perpendicular to the workpiece surface, locate the exit end as close to the part as possible. Otherwise the drill will tend to wander. For maximum drill guiding, we recommend specifying bushings with an angle milled on the exit end, tangent to the workpiece surface at point of entry.

SPECIAL BUSHINGS FOR CLOSE HOLE SPACING:

When holes are located close together, special bushings are sometimes required. Thinwall bushings, where the bushing ID is larger than the normal ID range for a given OD, are often a good solution. Holes for thinwall bushings must be very accurate and round, because these bushings are more-easily distorted. For very-close hole spacing, especially with headed bushings, specify bushings with ground flats.

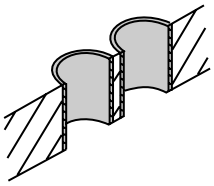

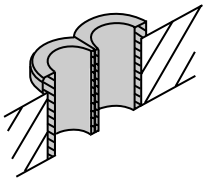

INSTALLATION-HOLE PREPARATION:

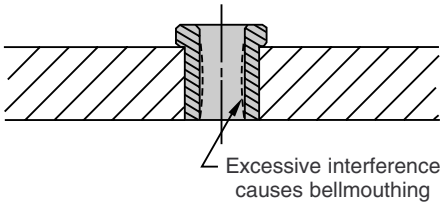

To avoid jig-plate or bushing distortion, do not use excessive interference fits on press-fit bushings. See table below for recommended hole sizes in unhardened steel or cast iron jig plates. Always prepare installation holes using a jig borer or reamer. Standard chucking reamers (with a plus tolerance) usually produce installation holes to the tolerances shown in the table. Other factors to consider are: (1) headed bushings require less interference to resist drilling thrust; (2) longer bushings in thick plates require less interference; (3) bushings with thinner walls are more prone to distortion; (4) less-ductile jig-plate materials require less interference.

USA

PRESS-FIT BUSHING OD		RECOMMENDED HOLE SIZE
NOM.	ACTUAL	
5/32	.1578-.1575	.1565-.1570
3/16	.1891-.1888	.1880-.1883
13/64	.2046-.2043	.2037-.2040
1/4	.2516-.2513	.2507-.2510
5/16	.3141-.3138	.3132-.3135
3/8	.3766-.3763	.3757-.3760
13/32	.4078-.4075	.4069-.4072
7/16	.4392-.4389	.4382-.4385
1/2	.5017-.5014	.5007-.5010
9/16	.5642-.5639	.5632-.5635
5/8	.6267-.6264	.6257-.6260
3/4	.7518-.7515	.7507-.7510
7/8	.8768-.8765	.8757-.8760
1	1.0018-1.0015	1.0007-1.0010
1-1/8	1.1270-1.1267	1.1257-1.1260
1-1/4	1.2520-1.2517	1.2507-1.2510
1-3/8	1.3772-1.3768	1.3757-1.3760
1-1/2	1.5021-1.5018	1.5007-1.5010
1-3/4	1.7523-1.7519	1.7507-1.7510
2-1/4	2.2525-2.2521	2.2507-2.2510
2-3/4	2.7526-2.7522	2.7507-2.7510

METRIC

PRESS-FIT BUSHING OD		RECOMMENDED HOLE SIZE (H7)
NOM.	ACTUAL (s6)	
3mm	3.020-3.014mm	3.000-3.010mm
4mm	4.027-4.019mm	4.000-4.012mm
5mm	5.027-5.019mm	5.000-5.012mm
6mm	6.027-6.019mm	6.000-6.012mm
7mm	7.032-7.023mm	7.000-7.015mm
8mm	8.032-8.023mm	8.000-8.015mm
10mm	10.032-10.023mm	10.000-10.015mm
12mm	12.039-12.028mm	12.000-12.018mm
15mm	15.039-15.028mm	15.000-15.018mm
18mm	18.039-18.028mm	18.000-18.018mm
22mm	22.048-22.035mm	22.000-22.021mm
26mm	26.048-26.035mm	26.000-26.021mm
30mm	30.048-30.035mm	30.000-30.021mm
35mm	35.059-35.043mm	35.000-35.025mm
42mm	42.059-42.043mm	42.000-42.025mm
48mm	48.059-48.043mm	48.000-48.025mm
55mm	55.072-55.053mm	55.000-55.030mm
62mm	62.072-62.053mm	62.000-62.030mm
70mm	70.078-70.059mm	70.000-70.030mm
78mm	78.078-78.059mm	78.000-78.030mm
85mm	85.093-85.071mm	85.000-85.035mm
95mm	95.093-95.071mm	95.000-95.035mm
105mm	105.101-105.079mm	105.000-105.035mm
115mm	115.101-115.079mm	115.000-115.035mm
125mm	125.117-125.092mm	125.000-125.040mm

Carr Lane MANUFACTURING CO.
4200 Carr Lane Ct., P.O. Box 191970
St. Louis, Missouri 63119-7970 USA
Phone: 314-647-6200, FAX: 314-647-5736
Web Site: www.carrlane.com

INSTALLATION AND TECHNICAL DATA

UNGROUND BUSHINGS AVAILABLE FOR OVERSIZE HOLES:

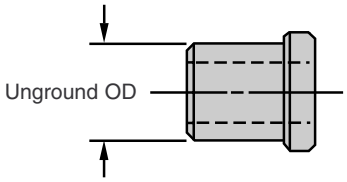

We offer bushings with unfinished ODs for custom-fitting to oversize holes. They are slightly larger than nominal diameter to provide grinding stock, .005-.020 extra, depending on the OD size (see charts under each specific bushing type). We recommend grinding on a mandrel to hold ID/OD concentricity.

INSTALLATION PROCEDURE:

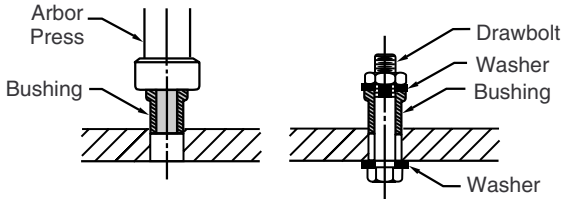

We recommend installing bushings with an arbor press whenever possible. If the bushing's OD is large enough, you can also use a drawbolt with two washers as shown above. If a hammer is the only tool available, do not strike the bushing directly or it could fracture. Use a soft-metal punch to cushion the blows. Before installing a press-fit bushing, lubricate the inside of the mounting hole and outside of the bushing with a lubricant such as lithium grease. Otherwise the bushing may score the mounting hole, and may be difficult to replace later.

GROUND LEAD FOR EASY INSTALLATION:

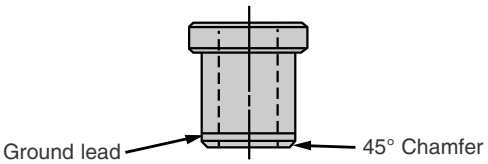

All bushings feature a concentric ground lead and a 45° chamfer on the exit end to ensure perfect alignment during installation.

COUNTERBORES ON LONG BUSHINGS:

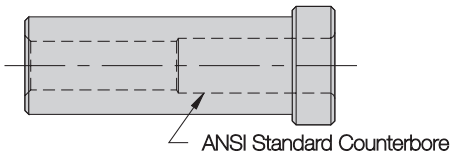

Long bushings with small IDs are slightly counterbored for proper drill-bearing length and chip clearance, as specified by ANSI standards. Counterbores prevent binding and heat buildup due to excessive bearing length. See chart on page 6 for ANSI counterbore depths. Counterbore diameters are generally 1/32 inch larger than the inside diameter, and are angled at the bottom for smooth entrance. No-counterbore bushings are available on request as specials.

DRILL ENTRANCE RADIUS:

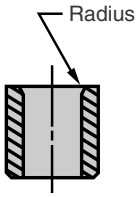

Bushings feature a blended and polished radius at the drill-entrance end for smooth drill entry and proper alignment, preventing drill wear and breakage. Radius size varies in proportion to drill size.

CONCENTRICITY:

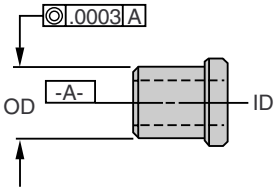

Bushing OD is ground concentric to the ID to within .0003 TIR for ID sizes from 1/8 inch to 1/2 inch (3mm to 12mm), unless otherwise indicated. For larger or smaller sizes, concentricity is within .0005 TIR. Unground bushings are concentric to within .006 TIR. On counterbored bushings, concentricity applies only over the drill-bearing length.

OTHER TOLERANCES:

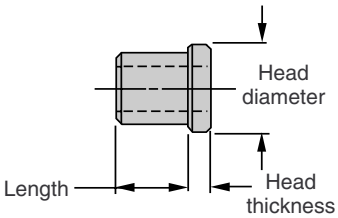

Any dimensions where tolerances are not specifically listed are held to +/- .010 inches on standard ANSI sizes, and +/-.015 inches on larger sizes (extended range). Special tolerances for any dimension are available on request as specials.

MATERIAL:

Standard drill-bushing material is durable 1144 Stressproof steel, heat treated to achieve RC 62-64 ID hardness, and other high-carbon steels. Optional materials such as tungsten carbide (Grade C2 carbide with steel head), 52100 steel, A2 tool steel, D2 tool steel, M2 tool steel, 416 stainless, 440C stainless, 17-4PH stainless, 303 stainless, 660 bronze, Ampco 18 bronze, Ampco 21 bronze, Oilite, and brass are available as specials. See pages 13, 19, and 27 for carbide bushings.

Carr Lane MANUFACTURING CO.
4200 Carr Lane Ct., P.O. Box 191970
St. Louis, Missouri 63119-7970 USA
Phone: 314-647-6200, FAX: 314-647-5736
Web Site: www.carrlane.com

COUNTERBORE DATA

TYPE P — DRILL BEARING LENGTH

DRILL SIZE (ID)	OD	BUSHING LENGTH											
		1/4	5/16	3/8	1/2	3/4	1	1-3/8	1-1/2	1-3/4	2-1/8	2-1/2	3
.0135 - .0291	5/32	FULL	FULL	FULL	5/16	5/16	5/16	5/16	5/16	5/16	5/16	5/16	5/16
.0292 - .0519													
.0520 - .0625													
.0135 - .0291	3/16	FULL	FULL	FULL	5/16	5/16	5/16	5/16	5/16	5/16	5/16	5/16	5/16
.0292 - .0519													
.0520 - .0634													
.0635 - .0995					FULL	7/16	7/16	7/16	7/16	7/16	7/16	7/16	7/16
.0135 - .0291	13/64	FULL	FULL	FULL	5/16	5/16	5/16	5/16	5/16	5/16	5/16	5/16	5/16
.0292 - .0519													
.0520 - .0634													
.0635 - .0995					FULL	7/16	7/16	7/16	7/16	7/16	7/16	7/16	7/16
.0980 - .1406	1/4	FULL	FULL	FULL	FULL	7/16	5/8	5/8	5/8	5/8	5/8	5/8	5/8
.1250 - .1935	5/16	FULL	FULL	FULL	FULL	FULL	5/8	5/8	5/8	5/8	5/8	5/8	5/8
.1935 - .2880	3/8	FULL	FULL	FULL	FULL	FULL	5/8	5/8	5/8	5/8	5/8	5/8	5/8
.1875 - .2570	13/32	FULL	FULL	FULL	FULL	FULL	5/8	5/8	5/8	5/8	5/8	5/8	5/8
.2340 - .2900	7/16	FULL	FULL	FULL	FULL	FULL	5/8	5/8	5/8	5/8	5/8	5/8	5/8
.1875 - .3160	1/2	FULL	FULL	FULL	FULL	FULL	5/8	3/4	3/4	3/4	3/4	3/4	3/4
.3125 - .4375	5/8	FULL	FULL	FULL	FULL	FULL	FULL	FULL	FULL	FULL	FULL	1-1/2	1-1/2
.3125 - .5313	3/4	FULL	FULL	FULL	FULL	FULL	FULL	FULL	FULL	FULL	FULL	1-1/2	1-1/2

TYPE H — DRILL BEARING LENGTH

RANGE (ID)	OD	BUSHING LENGTH (UNDER HEAD)											
		1/4	5/16	3/8	1/2	3/4	1	1-3/8	1-1/2	1-3/4	2-1/8	2-1/2	3
.0135 - .0291	5/32	FULL	FULL	5/16	5/16	5/16	5/16	5/16	5/16	5/16	5/16	5/16	5/16
.0292 - .0519													
.0520 - .0625				FULL									
.0135 - .0291	13/64	FULL	FULL	5/16	5/16	5/16	5/16	5/16	5/16	5/16	5/16	5/16	5/16
.0292 - .0519													
.0520 - .0634				FULL									
.0635 - .0995					7/16	7/16	7/16	7/16	7/16	7/16	7/16	7/16	7/16
.0980 - .1406	1/4	FULL	FULL	FULL	7/16	7/16	5/8	5/8	5/8	5/8	5/8	5/8	5/8
.1250 - .1935	5/16	FULL	FULL	FULL	FULL	FULL	5/8	5/8	5/8	5/8	5/8	5/8	5/8
.1935 - .2280	3/8	FULL	FULL	FULL	FULL	FULL	5/8	5/8	5/8	5/8	5/8	5/8	5/8
.1875 - .2570	13/32	FULL	FULL	FULL	FULL	FULL	5/8	5/8	5/8	5/8	5/8	5/8	5/8
.2340 - .2900	7/16	FULL	FULL	FULL	FULL	FULL	5/8	5/8	5/8	5/8	5/8	5/8	5/8
.1875 - .3160	1/2	FULL	FULL	FULL	FULL	FULL	3/4	3/4	3/4	3/4	3/4	3/4	3/4
.3125 - .4375	5/8	FULL	FULL	FULL	FULL	FULL	FULL	FULL	FULL	FULL	FULL	1-1/2	1-1/2
.3125 - .5313	3/4	FULL	FULL	FULL	FULL	FULL	FULL	FULL	FULL	FULL	FULL	1-1/2	1-1/2

TYPES SF & FM — DRILL BEARING LENGTH

DRILL SIZE (ID)	OD	BUSHING LENGTH (UNDER HEAD)												
		1/4	5/16	3/8	1/2	5/8	3/4	1	1-3/8	1-1/2	1-3/4	2-1/8	2-1/2	3
.0135 - .0291	3/16	1/4	5/16	5/16	5/16	5/16	5/16	5/16	5/16	5/16	5/16	5/16	5/16	5/16
.0292 - .0519		FULL												
.0520 - .0634														
.0635 - .0980				3/8	7/16	7/16	7/16	7/16	7/16	7/16	7/16	7/16	7/16	7/16
.0995 - .1405	1/4	FULL	FULL	3/8	7/16	7/16	7/16	7/16	7/16	7/16	7/16	7/16	7/16	7/16
.0135 - .0291	5/16	1/4	5/16	5/16	5/16	5/16	5/16	5/16	5/16	5/16	5/16	5/16	5/16	5/16
.0292 - .0519		FULL												
.0520 - .0634														
.0635 - .0934			FULL	3/8	7/16	7/16	7/16	7/16	7/16	7/16	7/16	7/16	7/16	7/16
.0935 - .1249				FULL										
.1250 - .1935				FULL	FULL	FULL	5/8	5/8	5/8	5/8	5/8	5/8	5/8	5/8
.1935 - .2280	3/8	FULL	FULL	FULL	FULL	FULL	FULL	5/8	5/8	5/8	5/8	5/8	5/8	5/8
.2340 - .2900	7/16	FULL	FULL	FULL	FULL	FULL	FULL	5/8	5/8	5/8	5/8	5/8	5/8	5/8
.1405 - .1889	1/2	FULL	FULL	FULL	FULL	FULL	5/8	5/8	5/8	5/8	5/8	5/8	5/8	5/8
.1890 - .3438							FULL	7/8	1	1	1	1	1	1
.2950 - .5625	3/4	FULL	FULL	FULL	FULL	FULL	FULL	FULL	FULL	FULL	FULL	FULL	1-1/2	1-1/2

Carr Lane®
MANUFACTURING CO.
4200 Carr Lane Ct., P.O. Box 191970
St. Louis, Missouri 63119-7970 USA
Phone: 314-647-6200, FAX: 314-647-5736
Web Site: www.carrlane.com

SPECIALS

1. SPECIAL ID SIZE (WITHIN LISTED ID RANGE):

With standard OD, standard length, and standard tolerances.

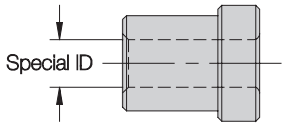

Special ID sizes include any ID size that is not a standard fractional, number, letter, or metric drill size as listed on the back cover of our catalog (reamer and tap-guide ID sizes are specials). To price, add a prorated $55.00 setup charge to the quantity price for the standard OD and length.

Example: (6) H-10-8-.0365

List price for H-10-8	$27.83
Quantity price for H-10-8 ($27.83 less 18%)	$22.82
$55.00 setup divided by 6	+ 9.17
	$31.99

2. ID SIZE SMALLER THAN LISTED RANGE:

With standard or special ID, standard OD, standard length, and standard tolerances.

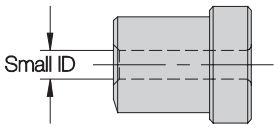

To price, compare price for the standard OD and length with the price for the largest bushing of the same length with the ID within range. Add a prorated $55.00 setup charge to the higher of the two.

Example: (6) H-16-8-.0820

List price for H-16-8 (low)	$12.05
List price for H-13-8 (high)	$13.27
Quantity price for H-13-8 ($13.27 less 18%)	$10.88
$55.00 setup divided by 6	+ 9.17
	$20.05

3. ID SIZE LARGER THAN LISTED RANGE (THIN-WALL BUSHINGS):

With standard or special ID, standard OD, standard length, and standard tolerances.

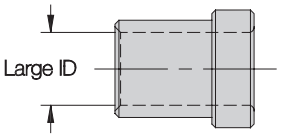

Check for adequate wall thickness by calculating the ratio of ID divided by OD:

Up to 1/4" OD	ID/OD must be ≤ .70
Over 1/4" to 1/2" OD	ID/OD must be ≤ .75
Over 1/2" OD	ID/OD must be ≤ .80

Please contact factory for pricing.

4. SPECIAL OD SIZE:

With standard ID and length for the next-larger OD, and standard tolerances.

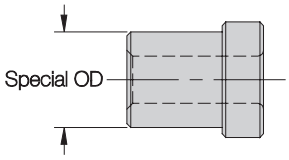

To price, add a prorated $55.00 setup charge to the quantity price for the same-length bushing with the next-larger standard OD. Head dimensions for the next-larger size will be used unless otherwise requested.

Example: (6) H-18-8-.1250

List price for H-20-8	$ 9.85
Quantity price for H-20-8 ($9.85 less 18%)	$ 8.08
$55.00 setup divided by 6	+9.17
	$17.25

5. SPECIAL LENGTH

With standard ID, standard OD, standard tolerances, and length shorter than maximum listed length.

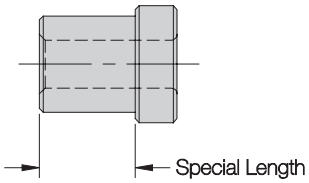

To price, add a prorated $55.00 setup charge to the quantity price for the next-longer standard length.

Example: (6) H-16-14-.1250

List price for H-16-16	$ 20.03
Quantity price for H-16-16 ($20.03 less 18%)	$ 16.42
$55.00 setup divided by 6	+ 9.17
	$ 25.59

MANUFACTURING CO.
4200 Carr Lane Ct., P.O. Box 191970
St. Louis, Missouri 63119-7970 USA
Phone: 314-647-6200, FAX: 314-647-5736
Web Site: www.carrlane.com

SPECIALS

6. EXTRA LENGTH:

With standard ID, standard OD, and standard tolerances.

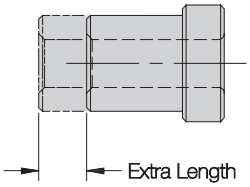

To price, add 15% for up to 1/4" extra length, to the quantity price for the longest length listed in the catalog, plus a prorated $55.00 setup charge.

Example: (6) H-16-26-.1250

List price for H-16-24	$28.92
Quantity price for H-16-24 ($28.92 less 18%)	$23.71
Quantity price for H-16-24 plus 15%	$27.27
$55.00 setup divided by 6	+ 9.17
	$36.44

7. COMBINATION SPECIAL ID, OD, AND/OR LENGTH:

With standard tolerances.

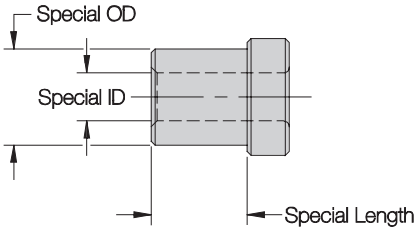

To price, compare price for the ID range, special OD, and/or special length. Add a prorated $55.00 setup charge to the highest of all the prices.

Example: (6) H-22-14-.1260

List price for H-24-16, ID range (low)	$11.48
List price for H-20-16, ID range (high)	$12.17
List price for H-24-16, OD range (low)	$11.48
List price for H-24-16, Length (low)	$11.48
Quantity price for H-20-16 ($12.17 less 18%)	$ 9.98
$55.00 setup divided by 6	+ 9.17
	$19.15

8. SPECIAL TOLERANCES:

With standard ID, standard OD, and standard length.

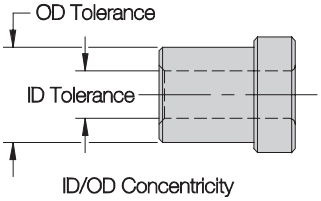

To price, add the following percentages to the standard bushing's price (add a separate percentage charge for each special tolerance). Also add a prorated $55.00 setup charge.

.0002 ID tolerance range (up to 1" ID)	+25%
.0001 ID tolerance range (up to 1" ID)	+75%
.0001 OD tolerance range (up to 1" OD)	+25%
.0002 TIR concentricity (over 1/8" to 1" ID)	+25%

Example: (6) H-16-10-.1250 ID+0/+.0001 CONC .0002

List price for H-16-10	$13.27
Quantity price for H-16-10 ($13.27 less 18%)	$10.88
Add-on for .0001 ID tolerance (+ 75%)	+ 8.16
Add-on for .0002 concentricity (+ 25%)	+ 2.72
$55.00 setup divided by 6	+ 9.17
	$30.93

9. NO COUNTERBORE ON LONG BUSHINGS:

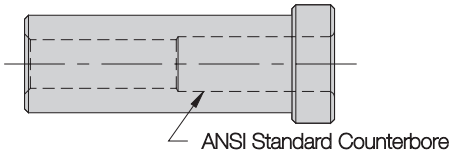

Contact factory for special pricing on "No Counterbore" bushings, long bushings that would normally be counterbored, according to ANSI standards.

10. OTHER ALTERATIONS:

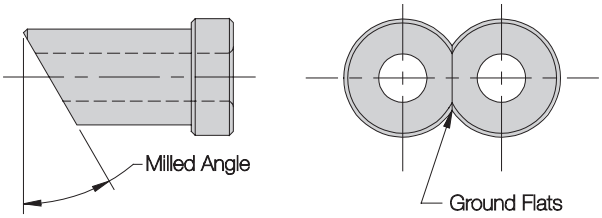

For milled angles, ground flats, cross holes, chip breakers, oil grooves, or special finishing, please contact factory.

11. SPECIAL MATERIAL:

Bushings made of the following heat-treated materials are readily available as specials:

52100 Steel	416 Stainless Steel
A2 Tool Steel	440C Stainless Steel
D2 Tool Steel	17-4PH Stainless Steel
M2 Tool Steel	

Bushings made of the following non-heat-treated materials are also readily available as specials:

303 Stainless Steel	Ampco 21 Bronze
660 Bronze	Oilite
Ampco 18 Bronze	Brass

Please contact factory for pricing.

MANUFACTURING CO.
4200 Carr Lane Ct., P.O. Box 191970
St. Louis, Missouri 63119-7970 USA
Phone: 314-647-6200, FAX: 314-647-5736
Web Site: www.carrlane.com

PRESS FIT

P

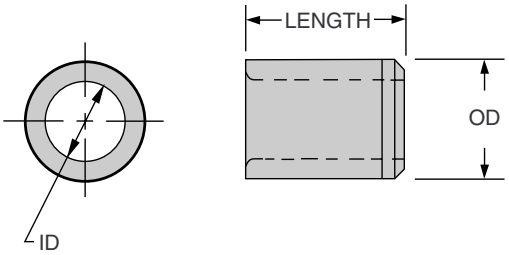

APPLICATIONS:

This is the most-popular and least-expensive drill bushing. P bushings are permanently pressed into the jig plate, usually flush with the top surface. They are generally used for single-step drilling or reaming operations when you do not expect to replace bushings during the tooling's lifetime. P bushings can be mounted closer together than headed bushings, but offer less resistance to heavy axial loads.

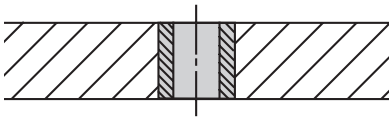

ORDERING EXAMPLES:

P-20-16-.1250	Standard USA bushing, inch ID
P-20-16-.1772	Standard USA bushing, mm ID (.1772 = 4.50mm)
P-20-16U-.1250	Unground OD
P-20-16-.1250 REAMER	Reamer tolerance on ID
P-20-16-.1250 NCB	No counterbore on long bushings marked with * (no counterbore is standard on all other bushings)
PC-20-16-.1250	Carbide bushing
PM-8-12-4.50	Standard metric bushing

Prices shown here apply to standard bushings only, either ground or unground OD, for a standard drill size within the stated ID range. See back cover for decimal equivalents. To price non-standard sizes, including all reamer and tap-guide bushings, see page 7.

STANDARD ID TOLERANCES:

From #80 to 1/4"	+ .0001/+.0004	From .35 to 3mm	+.002/+.008mm
		Over 3 to 6mm	+.004/+.012mm
Over 1/4 to 3/4"	+ .0001/+.0005	Over 6 to 10mm	+.005/+.014mm
		Over 10 to 18mm	+.006/+.017mm
Over 3/4 to 1-1/2"	+ .0002/+.0006	Over 18 to 30mm	+.007/+.020mm
		Over 30 to 50mm	+.009/+.025mm
Over 1-1/2 to 2-3/4"	+ .0003/+.0007	Over 50 to 80mm	+.010/+.029mm
		Over 80 to 120mm	+.012/+.034mm
		(G6 tolerance)	

REAMER ID TOLERANCES:

From #60 to 1/4"	+.0005/+.0008	From 1 to 3mm	+.006/+.012mm
		Over 3 to 6mm	+.010/+.018mm
Over 1/4 to 1"	+.0006/+.0010	Over 6 to 10mm	+.013/+.022mm
		Over 10 to 18mm	+.016/+.027mm
Over 1" to 1-1/2"	+.0008/+.0012	Over 18 to 30mm	+.020/+.033mm
		(F6 tolerance)	

ID RANGE	OD	LENGTH	ANSI PART NO.	PRICE 1-5
.0135-.0291 #80-#70 .35-.70mm	**5/32** .1578-.1575 (.166-.161 UNG)	1/4	P-10-4	Please see our web catalog for pricing.
		5/16	P-10-5	
		3/8	P-10-6	
		*1/2	P-10-8	
.0292-.0519 #69-3/64 .75-1.25mm		1/4	P-10-4	
		5/16	P-10-5	
		3/8	P-10-6	
		*1/2	P-10-8	
		*3/4	P-10-12	
.0520-.0625 #55-1/16 1.30-1.60mm		1/4	P-10-4	
		5/16	P-10-5	
		3/8	P-10-6	
		*1/2	P-10-8	
		*3/4	P-10-12	
.0520-.0634 #55-1/16 1.30-1.60mm	**3/16** .1891-.1888 (.201-.197 UNG)	1/4	P-12-4	
		5/16	P-12-5	
		3/8	P-12-6	
		*1/2	P-12-8	
		*5/8	P-12-10	
		*3/4	P-12-12	
.0635-.0995 #52-#39 1.65-2.50mm		1/4	P-12-4	
		5/16	P-12-5	
		3/8	P-12-6	
		1/2	P-12-8	
		5/8	P-12-10	
		*3/4	P-12-12	
.0135-.0291 #80-#70 .35-.70mm	**13/64** .2046-.2043 (.213-.208 UNG)	1/4	P-13-4	
		5/16	P-13-5	
		3/8	P-13-6	
		*1/2	P-13-8	
.0292-.0519 #69-3/64 .75-1.30mm		1/4	P-13-4	
		5/16	P-13-5	
		3/8	P-13-6	
		*1/2	P-13-8	
		*3/4	P-13-12	
.0520-.0634 #55-1/16 1.35mm-1.60mm		1/4	P-13-4	
		5/16	P-13-5	
		3/8	P-13-6	
		*1/2	P-13-8	
		*3/4	P-13-12	
		*1	P-13-16	
.0635-.0995 #52-#39 1.65-2.50mm		1/4	P-13-4	
		5/16	P-13-5	
		3/8	P-13-6	
		1/2	P-13-8	
		*3/4	P-13-12	
		*1	P-13-16	
		*1-3/8	P-13-22	

* Counterbored, leaving correct drill-bearing length and clearance (see page 6 for bearing length).

QUANTITY DISCOUNTS

Quantity	1 -5	6 -11	12 -23	24 -49	50 -99	100 -199	200 -499	500 Up
Discount %	Net	18%	29%	34%	42%	48%	50%	52%
Multiplier	1.00	.82	.71	.66	.58	.52	.50	.48

Carr Lane® MANUFACTURING CO.
4200 Carr Lane Ct., P.O. Box 191970
St. Louis, Missouri 63119-7970 USA
Phone: 314-647-6200, FAX: 314-647-5736
Web Site: www.carrlane.com

P PRESS FIT

ID RANGE	OD	LENGTH	ANSI PART NO.	PRICE 1-5
.0980-.1406 #40-9/64 2.50-3.50mm	**1/4** .2516-.2513 (.265-.260 UNG)	1/4	P-16-4	Please see our web catalog for pricing.
		5/16	P-16-5	
		3/8	P-16-6	
		1/2	P-16-8	
		5/8	P-16-10	
		*3/4	P-16-12	
		*1	P-16-16	
		*1-3/8	P-16-22	
		*1-1/2	P-16-24	
		*1-3/4	P-16-28	
.1250-.1935 1/8-#10 3.20-4.90mm	**5/16** .3141-.3138 (.327-.322 UNG)	1/4	P-20-4	
		5/16	P-20-5	
		3/8	P-20-6	
		1/2	P-20-8	
		5/8	P-20-10	
		3/4	P-20-12	
		*1	P-20-16	
		*1-3/8	P-20-22	
		*1-1/2	P-20-24	
		*1-3/4	P-20-28	
.1935-.2280 #10-#1 4.90-5.80mm	**3/8** .3766-.3763 (.390-.385 UNG)	1/4	P-24-4	
		5/16	P-24-5	
		3/8	P-24-6	
		1/2	P-24-8	
		5/8	P-24-10	
		3/4	P-24-12	
		*1	P-24-16	
.1875-.2570 3/16-F 4.75-6.50mm	**13/32** .4078-.4075 (.421-.416 UNG)	1/4	P-26-4	
		5/16	P-26-5	
		3/8	P-26-6	
		1/2	P-26-8	
		3/4	P-26-12	
		*1	P-26-16	
		*1-3/8	P-26-22	
		*1-1/2	P-26-24	
		*1-3/4	P-26-28	
.2340-.2900 A-L 5.90-7.40mm	**7/16** .4392-.4389 (.453-.448 UNG)	1/4	P-28-4	
		5/16	P-28-5	
		3/8	P-28-6	
		1/2	P-28-8	
		5/8	P-28-10	
		3/4	P-28-12	
		*1	P-28-16	
.1875-.3160 3/16-O 4.75-8.00mm	**1/2** .5017-.5014 (.520-.515 UNG)	1/4	P-32-4	
		5/16	P-32-5	
		3/8	P-32-6	
		1/2	P-32-8	
		3/4	P-32-12	
		*1	P-32-16	
		*1-3/8	P-32-22	
		*1-1/2	P-32-24	
		*1-3/4	P-32-28	
		*2-1/8	P-32-34	

ID RANGE	OD	LENGTH	ANSI PART NO.	PRICE 1-5
.2950-.3438 M-11/32 7.50-8.75mm	**9/16** .5642-.5639 (.582-.577 UNG)	1/4	P-36-4	Please see our web catalog for pricing.
		5/16	P-36-5	
		3/8	P-36-6	
		1/2	P-36-8	
		5/8	P-36-10	
		3/4	P-36-12	
		1	P-36-16	
.3125-.4375 5/16-7/16 7.90-11.00mm	**5/8** .6267-.6264 (.645-.640 UNG)	1/4	P-40-4	
		5/16	P-40-5	
		3/8	P-40-6	
		1/2	P-40-8	
		5/8	P-40-10	
		3/4	P-40-12	
		1	P-40-16	
		1-1/4	P-40-20	
		1-3/8	P-40-22	
		1-1/2	P-40-24	
		1-3/4	P-40-28	
		2-1/8	P-40-34	
.3125-.5312 5/16-17/32 7.90-13.50mm	**3/4** .7518-.7515 (.770-.765 UNG)	1/4	P-48-4	
		5/16	P-48-5	
		3/8	P-48-6	
		1/2	P-48-8	
		5/8	P-48-10	
		3/4	P-48-12	
		1	P-48-16	
		1-1/4	P-48-20	
		1-3/8	P-48-22	
		1-1/2	P-48-24	
		1-3/4	P-48-28	
		2-1/8	P-48-34	
		*2-1/2	P-48-40	
.5000-.6562 1/2-21/32 12.50-16.50mm	**7/8** .8768-.8765 (.895-.890 UNG)	5/16	P-56-5	
		3/8	P-56-6	
		1/2	P-56-8	
		5/8	P-56-10	
		3/4	P-56-12	
		1	P-56-16	
		1-1/4	P-56-20	
		1-3/8	P-56-22	
		1-1/2	P-56-24	
		1-3/4	P-56-28	
		2-1/8	P-56-34	
		2-1/2	P-56-40	

* Counterbored, leaving correct drill-bearing length and clearance (see page 6 for bearing length).

QUANTITY DISCOUNTS

Quantity	1 -5	6 -11	12 -23	24 -49	50 -99	100 -199	200 -499	500 Up
Discount %	Net	18%	29%	34%	42%	48%	50%	52%
Multiplier	1.00	.82	.71	.66	.58	.52	.50	.48

Carr Lane MANUFACTURING CO.
4200 Carr Lane Ct., P.O. Box 191970
St. Louis, Missouri 63119-7970 USA
Phone: 314-647-6200, FAX: 314-647-5736
Web Site: www.carrlane.com

PRESS FIT

P

ID RANGE	OD	LENGTH	ANSI PART NO.	PRICE 1-5
.5000-.7656 1/2-49/64 12.50-19.50mm	**1** 1.0018-1.0015 (1.020-1.015 UNG)	1/2	P-64-8	Please see our web catalog for pricing.
		5/8	P-64-10	
		3/4	P-64-12	
		1	P-64-16	
		1-1/4	P-64-20	
		1-3/8	P-64-22	
		1-1/2	P-64-24	
		1-3/4	P-64-28	
		2-1/8	P-64-34	
		2-1/2	P-64-40	
		3	P-64-48	
.7656-.8438 49/64-27/32 19.50-21.50mm	**1-1/8** 1.1270-1.1267 (1.145-1.140 UNG)	1/2	P-72-8	
		5/8	P-72-10	
		3/4	P-72-12	
		1	P-72-16	
		1-1/4	P-72-20	
		1-1/2	P-72-24	
		1-3/4	P-72-28	
.8594-.9375 55/64-15/16 22.00-24.00mm	**1-1/4** 1.2520-1.2517 (1.270-1.265 UNG)	5/8	P-80-10	
		3/4	P-80-12	
		1	P-80-16	
		1-1/4	P-80-20	
		1-1/2	P-80-24	
		1-3/4	P-80-28	
		2	P-80-32	
.6250-1.0312 5/8-1-1/32 16.00-26.00mm	**1-3/8** 1.3772-1.3768 (1.395-1.390 UNG)	1/2	P-88-8	
		5/8	P-88-10	
		3/4	P-88-12	
		1	P-88-16	
		1-1/4	P-88-20	
		1-3/8	P-88-22	
		1-1/2	P-88-24	
		1-3/4	P-88-28	
		2	P-88-32	
		2-1/8	P-88-34	
		2-1/2	P-88-40	
		3	P-88-48	
1.0156-1.1250 1-1/64-1-1/8 26.00-29.00mm	**1-1/2** 1.5021-1.5018 (1.520-1.515 UNG)	3/4	P-96-12	
		1	P-96-16	
		1-1/4	P-96-20	
		1-1/2	P-96-24	
		1-3/4	P-96-28	
		2	P-96-32	
		2-1/4	P-96-36	

ID RANGE	OD	LENGTH	ANSI PART NO.	PRICE 1-5
1.0000-1.3906 1-1-25/64 25.00-35.00mm	**1-3/4** 1.7523-1.7519 (1.770-1.765 UNG)	3/4	P-112-12	Please see our web catalog for pricing.
		1	P-112-16	
		1-3/8	P-112-22	
		1-1/2	P-112-24	
		1-3/4	P-112-28	
		2-1/8	P-112-34	
		2-1/2	P-112-40	
		3	P-112-48	
1.3750-1.7656 1-3/8-1-49/64 35.00-45.00mm	**2-1/4** 2.2525-2.2521 (2.270-2.265 UNG)	1	P-144-16	
		1-3/8	P-144-22	
		1-1/2	P-144-24	
		1-3/4	P-144-28	
		2-1/8	P-144-34	
		2-1/2	P-144-40	
		3	P-144-48	

For extended-range bushings (larger sizes) please see our web catalog.

Have a problem?

Carr Lane can help you pin it down, with

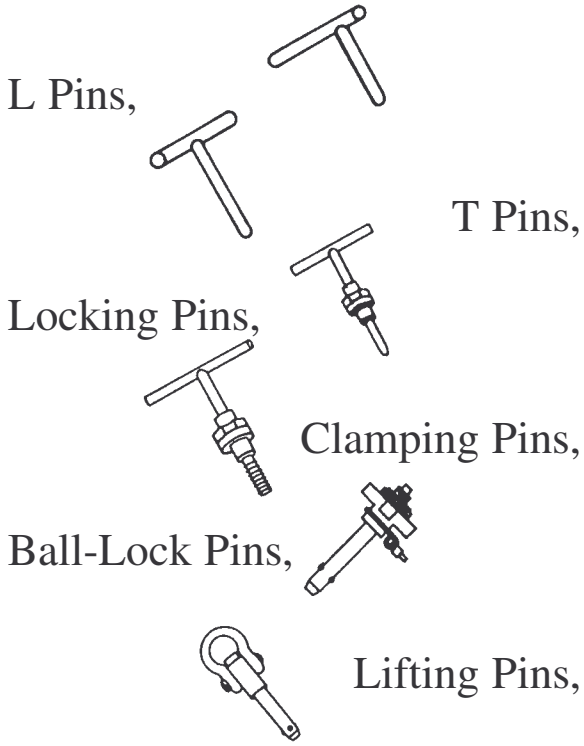

QUANTITY DISCOUNTS

Quantity	1 -5	6 -11	12 -23	24 -49	50 -99	100 -199	200 -499	500 Up
Discount %	Net	18%	29%	34%	42%	48%	50%	52%
Multiplier	1.00	.82	.71	.66	.58	.52	.50	.48

Carr Lane® MANUFACTURING CO.
4200 Carr Lane Ct., P.O. Box 191970
St. Louis, Missouri 63119-7970 USA
Phone: 314-647-6200, FAX: 314-647-5736
Web Site: www.carrlane.com

PRESS FIT CARBIDE

PC

ID RANGE	OD	LENGTH	ANSI PART NO.	PRICE 1-5
.0280-.0468 #70-#56 .75-1.15mm	**5/32** .1578-.1575	5/16	PC-10-5	Contact Factory
		1/2	PC-10-8	
.0469-.0625 3/64-1/16 1.20-1.55mm		5/16	PC-10-5	Contact Factory
		1/2	PC-10-8	
.0550-.0995 #54-#39 1.40-2.50mm	**13/64** .2046-.2043	5/16	PC-13-5	Contact Factory
		1/2	PC-13-8	
.0995-.1360 #39-#29 2.55-3.40mm	**1/4** .2516-.2513	5/16	PC-16-5	Contact Factory
		1/2	PC-16-8	
.1285-.1875 #30-3/16 3.30-4.75mm	**5/16** .3141-.3138	5/16	PC-20-5	Contact Factory
		1/2	PC-20-8	
		3/4	PC-20-12	
		1	PC-20-16	
.1875-.2500 3/16-1/4 4.80-6.30mm	**13/32** .4078-.4075	5/16	PC-26-5	Contact Factory
		1/2	PC-26-8	
		3/4	PC-26-12	
		1	PC-26-16	
.2188-.3125 7/32-5/16 5.60-7.90mm	**1/2** .5017-.5014	5/16	PC-32-5	Contact Factory
		1/2	PC-32-8	
		3/4	PC-32-12	
		1	PC-32-16	
		1-3/8	PC-32-22	
.3125-.4219 5/16-27/64 8.00-10.50mm	**5/8** .6267-.6264	1/2	PC-40-8	Contact Factory
		3/4	PC-40-12	
		1	PC-40-16	
		1-3/8	PC-40-22	
.3750-.5000 3/8-1/2 9.60-12.50mm	**3/4** .7518-.7515	1/2	PC-48-8	Contact Factory
		3/4	PC-48-12	
		1	PC-48-16	
		1-3/8	PC-48-22	
.5000-.6250 1/2-5/8 13.00-15.50mm	**7/8** .8768-.8765	1/2	PC-56-8	Contact Factory
		3/4	PC-56-12	
		1	PC-56-16	
		1-3/8	PC-56-22	
		1-3/4	PC-56-28	

ID RANGE	OD	LENGTH	ANSI PART NO.	PRICE 1-5
.5000-.7500 1/2-3/4 13.00-19.00mm	**1** 1.0018-1.0015	1/2	PC-64-8	Contact Factory
		3/4	PC-64-12	
		1	PC-64-16	
		1-3/8	PC-64-22	
		1-3/4	PC-64-28	
.7500-1.0000 3/4-1 19.50-25.00mm	**1-3/8** 1.3772-1.3768	3/4	PC-88-12	Contact Factory
		1	PC-88-16	
		1-3/8	PC-88-22	
		1-3/4	PC-88-28	
		2-1/8	PC-88-34	
		2-1/2	PC-88-40	
1.0000-1.3750 1–1-3/8 26.00-34.00mm	**1-3/4** 1.7523-1.7519	1	PC-112-16	Contact Factory
		1-3/8	PC-112-22	
		1-3/4	PC-112-28	
		2-1/8	PC-112-34	
		2-1/2	PC-112-40	
		3	PC-112-48	
1.3750-1.7500 1-3/8-1-3/4 35.00-44.00mm	**2-1/4** 2.2525-2.2521	1	PC-144-16	Contact Factory
		1-3/8	PC-144-22	
		1-3/4	PC-144-28	
		2-1/8	PC-144-34	
		2-1/2	PC-144-40	
		3	PC-144-48	

Check out Carr Lane's CAD/CAM library of tooling components, the Tool Designer's Assistant®, available in 2-D or 3-D, micro-based workstation or mainframe.

See our ad in the front of this book.

Carr Lane® MANUFACTURING CO.
4200 Carr Lane Ct., P.O. Box 191970
St. Louis, Missouri 63119-7970 USA
Phone: 314-647-6200, FAX: 314-647-5736
Web Site: www.carrlane.com

PM

PRESS FIT METRIC

ID RANGE (G6)	OD (s6)	LENGTH	ANSI PART NO.	PRICE 1-5
.35-1.00mm	4mm 4.027-4.019mm	*6mm	PM-4-6	Please see our web catalog for pricing.
		*9mm	PM-4-9	
1.01-1.80mm		6mm	PM-4-6	
		9mm	PM-4-9	
1.81-2.60mm	5mm 5.027-5.019mm	6mm	PM-5-6	
		9mm	PM-5-9	
2.61-3.30mm	6mm 6.027-6.019mm	8mm	PM-6-8	
		12mm	PM-6-12	
		16mm	PM-6-16	
3.31-4.00mm	7mm 7.032-7.023mm	8mm	PM-7-8	
		12mm	PM-7-12	
		16mm	PM-7-16	
4.01-5.00mm	8mm 8.032-8.023mm	8mm	PM-8-8	
		12mm	PM-8-12	
		16mm	PM-8-16	
5.01-6.00mm	10mm 10.032-10.023mm	10mm	PM-10-10	
		16mm	PM-10-16	
		20mm	PM-10-20	
6.01-8.00mm	12mm 12.039-12.028mm	10mm	PM-12-10	
		16mm	PM-12-16	
		20mm	PM-12-20	
8.01-10.00mm	15mm 15.039-15.028mm	12mm	PM-15-12	
		20mm	PM-15-20	
		25mm	PM-15-25	
10.01-12.00mm	18mm 18.039-18.028mm	12mm	PM-18-12	
		20mm	PM-18-20	
		25mm	PM-18-25	
12.01-15.00mm	22mm 22.048-22.035mm	16mm	PM-22-16	
		28mm	PM-22-28	
		36mm	PM-22-36	
15.01-18.00mm	26mm 26.048-26.035mm	16mm	PM-26-16	
		28mm	PM-26-28	
		36mm	PM-26-36	
18.01-22.00mm	30mm 30.048-30.035mm	20mm	PM-30-20	
		36mm	PM-30-36	
		45mm	PM-30-45	
22.01-26.00mm	35mm 35.059-35.043mm	20mm	PM-35-20	
		36mm	PM-35-36	
		45mm	PM-35-45	
26.01-30.00mm	42mm 42.059-42.043mm	25mm	PM-42-25	
		45mm	PM-42-45	
		56mm	PM-42-56	
30.01-35.00mm	48mm 48.059-48.043mm	25mm	PM-48-25	
		45mm	PM-48-45	
		56mm	PM-48-56	
35.01-42.00mm	55mm 55.072-55.053mm	30mm	PM-55-30	
		56mm	PM-55-56	
		67mm	PM-55-67	
42.01-48.00mm	62mm 62.072-62.053mm	30mm	PM-62-30	
		56mm	PM-62-56	
		67mm	PM-62-67	

ID RANGE (G6)	OD (s6)	LENGTH	ANSI PART NO.	PRICE 1-5
48.01-55.00mm	70mm 70.078-70.059mm	30mm	PM-70-30	Please see our web catalog for pricing.
		56mm	PM-70-56	
		67mm	PM-70-67	
55.01-63.00mm	78mm 78.078-78.059mm	35mm	PM-78-35	
		67mm	PM-78-67	
		78mm	PM-78-78	
63.01-70.00mm	85mm 85.093-85.071mm	35mm	PM-85-35	
		67mm	PM-85-67	
		78mm	PM-85-78	
70.01-78.00mm	95mm 95.093-95.071mm	40mm	PM-95-40	
		78mm	PM-95-78	
		105mm	PM-95-105	
78.01-85.00mm	105mm 105.101-105.079mm	40mm	PM-105-40	
		78mm	PM-105-78	
		105mm	PM-105-105	
85.01-95.00mm	115mm 115.101-115.079mm	45mm	PM-115-45	
		89mm	PM-115-89	
		112mm	PM-115-112	
95.01-105.00mm	125mm 125.117-125.092mm	45mm	PM-125-45	
		89mm	PM-125-89	
		112mm	PM-125-112	

* Small metric drill sizes through .80mm are counterbored 1.00mm diameter, with 3mm drill-bearing length.

QUANTITY DISCOUNTS

Quantity	1 -5	6 -11	12 -23	24 -49	50 -99	100 -199	200 -499	500 Up
Discount %	Net	18%	29%	34%	42%	48%	50%	52%
Multiplier	1.00	.82	.71	.66	.58	.52	.50	.48

A man's real limitations are not the things he wants to do and cannot; they are the things he ought to do but does not.

CarrLane® MANUFACTURING CO.
4200 Carr Lane Ct., P.O. Box 191970
St. Louis, Missouri 63119-7970 USA
Phone: 314-647-6200, FAX: 314-647-5736
Web Site: www.carrlane.com

H HEAD PRESS FIT

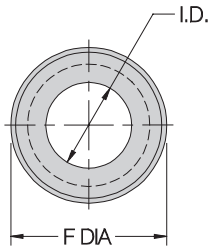

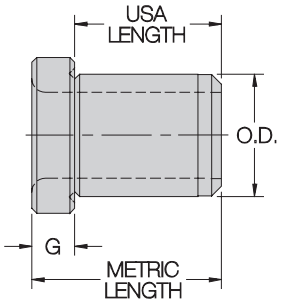

USA

BODY OD	F DIA	G
5/32	1/4	3/32
13/64	19/64	3/32
1/4	23/64	3/32
5/16	27/64	1/8
3/8	1/2	3/32
13/32	1/2	5/32
7/16	9/16	3/32
1/2	39/64	7/32
9/16	11/16	3/32
5/8	51/64	7/32
3/4	59/64	7/32
7/8	1-7/64	1/4
1	1-15/64	5/16
1-1/4	1-1/2	1/4
1-3/8	1-39/64	3/8
1-3/4	1-63/64	3/8
2-1/4	2-31/6	3/8

METRIC

BODY OD	F DIA	G
4mm	7mm	2mm
5mm	8mm	2mm
6mm	9mm	2.5mm
7mm	10mm	2.5mm
8mm	11mm	2.5mm
10mm	13mm	3mm
12mm	15mm	3mm
15mm	18mm	3mm
18mm	22mm	4mm
22mm	26mm	4mm
26mm	30mm	4mm
30mm	34mm	5mm
35mm	39mm	5mm
42mm	46mm	5mm
48mm	52mm	5mm
55mm	59mm	5mm
62mm	66mm	6mm
70mm	74mm	6mm
78mm	82mm	6mm
85mm	90mm	6mm
95mm	100mm	6mm
105mm	110mm	6mm
115mm	120mm	6mm
125mm	130mm	6mm

APPLICATIONS:

Similar to a P bushing, but with a head to resist heavy axial loads. H bushings are permanently pressed into the jig plate. They are generally used for single-step drilling or reaming operations when you do not expect to replace bushings during the tooling's lifetime. The head can be left exposed, or recessed by counterboring the installation hole. **Note: The "length" listed for a USA head-press-fit bushing refers to its length under the head, while the metric version's "length" is its overall length.**

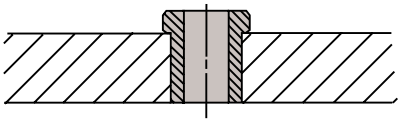

ORDERING EXAMPLES:

H-20-16-.1250	Standard USA bushing, inch ID
H-20-16-.1772	Standard USA bushing, mm ID (.1772 = 4.50mm)
H-20-16U-.1250	Unground OD
H-20-16-.1250 REAMER	Reamer tolerance on ID
H-20-16-.1250 NCB	No counterbore on long bushings marked with * (no counterbore is standard on all other bushings)
HC-20-16-.1250	Carbide bushing
HM-8-12-4.50	Standard metric bushing

Prices shown here apply to standard bushings only, either ground or unground OD, for a standard drill size within the stated ID range. See back cover for decimal equivalents. To price non-standard sizes, including all reamer and tap-guide bushings, see page 7.

STANDARD ID TOLERANCES:

From #80 to 1/4"	+.0001/+.0004	From .35 to 3mm	+.002/+.008mm
		Over 3 to 6mm	+.004/+.012mm
Over 1/4 to 3/4"	+.0001/+.0005	Over 6 to 10mm	+.005/+.014mm
		Over 10 to 18mm	+.006/+.017mm
Over 3/4 to 1-1/2"	+.0002/+.0006	Over 18 to 30mm	+.007/+.020mm
		Over 30 to 50mm	+.009/+.025mm
Over 1-1/2 to 2-3/4"	+.0003/+.0007	Over 50 to 80mm	+.010/+.029mm
		Over 80 to 120mm	+.012/+.034mm
		(G6 tolerance)	

REAMER ID TOLERANCES:

From #60 a 1/4"	+.0005/+.0008	From 1 to 3mm	+.006/+.012mm
		Over 3 to 6mm	+.010/+.018mm
Over 1/4 to 1"	+.0006/+.0010	Over 6 to 10mm	+.013/+.022mm
		Over 10 to 18mm	+.016/+.027mm
Over 1 to 1-1/2"	+.0008/+.0012	Over 18 to 30mm	+.020/+.033mm
		(F6 tolerance)	

ID RANGE	OD	LENGTH	ANSI PART NO.	PRICE 1-5
.0135-.0291 #80-#70 .35-.70mm	**5/32** .1578-.1575 (.166-.161 UNG)	1/4	H-10-4	Please see our web catalog for pricing.
		5/16	H-10-5	
		*3/8	H-10-6	
		*1/2	H-10-8	
.0292-.0519 #69-3/64 .75-1.25mm		1/4	H-10-4	
		5/16	H-10-5	
		*3/8	H-10-6	
		*1/2	H-10-8	
		*3/4	H-10-12	
.0520-.0625 #55-1/16 1.30-1.60mm		1/4	H-10-4	
		5/16	H-10-5	
		3/8	H-10-6	
		*1/2	H-10-8	
		*3/4	H-10-12	

* Counterbored, leaving correct drill-bearing length and chip clearance (see page 6 for bearing length).

QUANTITY DISCOUNTS

Quantity	1 -5	6 -11	12 -23	24 -49	50 -99	100 -199	200 -499	500 Up
Discount %	Net	18%	29%	34%	42%	48%	50%	52%
Multiplier	1.00	.82	.71	.66	.58	.52	.50	.48

CarrLane® MANUFACTURING CO.
4200 Carr Lane Ct., P.O. Box 191970
St. Louis, Missouri 63119-7970 USA
Phone: 314-647-6200, FAX: 314-647-5736
Web Site: www.carrlane.com

HEAD PRESS FIT

H

ID RANGE	OD	LENGTH	ANSI PART NO.	PRICE 1-5
.0135-.0291 #80-#70 .35-.70mm	**13/64** .2046-.2043 (.213-.208 UNG)	1/4	H-13-4	Please see our web catalog for pricing.
		5/16	H-13-5	
		*3/8	H-13-6	
		*1/2	H-13-8	
.0292-.0519 #69-3/64 .75-1.30mm		1/4	H-13-4	
		5/16	H-13-5	
		*3/8	H-13-6	
		*1/2	H-13-8	
		*3/4	H-13-12	
.0520-.0634 #55-1/16 1.35-1.60mm		1/4	H-13-4	
		5/16	H-13-5	
		3/8	H-13-6	
		*1/2	H-13-8	
		*3/4	H-13-12	
		*1	H-13-16	
.0635-.0995 #52-#39 1.65-2.50mm		1/4	H-13-4	
		5/16	H-13-5	
		3/8	H-13-6	
		*1/2	H-13-8	
		*3/4	H-13-12	
		*1	H-13-16	
.0980-.1406 #40-9/64 2.50-3.50mm	**1/4** .2516-.2513 (.265-.260 UNG)	1/4	H-16-4	
		5/16	H-16-5	
		3/8	H-16-6	
		*1/2	H-16-8	
		*5/8	H-16-10	
		*3/4	H-16-12	
		*1	H-16-16	
		*1-3/8	H-16-22	
		*1-1/2	H-16-24	
.1250-.1935 1/8-#10 3.20-4.90mm	**5/16** .3141-.3138 (.327-.322 UNG)	1/4	H-20-4	
		5/16	H-20-5	
		3/8	H-20-6	
		1/2	H-20-8	
		5/8	H-20-10	
		3/4	H-20-12	
		*1	H-20-16	
		*1-3/8	H-20-22	
		*1-1/2	H-20-24	
.1935-.2280 #10-#1 4.90-5.80mm	**3/8** .3766-.3763 (.390-.385 UNG)	1/4	H-24-4	
		5/16	H-24-5	
		3/8	H-24-6	
		1/2	H-24-8	
		5/8	H-24-10	
		3/4	H-24-12	
		*1	H-24-16	
.1875-.2570 3/16-F 4.75-6.50mm	**13/32** .4078-.4075 (.421-.416 UNG)	1/4	H-26-4	
		5/16	H-26-5	
		3/8	H-26-6	
		1/2	H-26-8	
		3/4	H-26-12	
		*1	H-26-16	
		*1-3/8	H-26-22	
		*1-1/2	H-26-24	
		*1-3/4	H-26-28	

ID RANGE	OD	LENGTH	ANSI PART NO.	PRICE 1-5
.2340-.2900 A-L 5.90-7.40mm	**7/16** .4392-.4389 (.453-.448 UNG)	1/4	H-28-4	Please see our web catalog for pricing.
		5/16	H-28-5	
		3/8	H-28-6	
		1/2	H-28-8	
		5/8	H-28-10	
		3/4	H-28-12	
		*1	H-28-16	
.1875-.3160 3/16-O 4.75-8.00mm	**1/2** .5017-.5014 (.520-.515 UNG)	1/4	H-32-4	
		5/16	H-32-5	
		3/8	H-32-6	
		1/2	H-32-8	
		3/4	H-32-12	
		*1	H-32-16	
		*1-3/8	H-32-22	
		*1-1/2	H-32-24	
		*1-3/4	H-32-28	
.2950-.3438 M-11/32 7.50-8.75mm	**9/16** .5642-.5639 (.582-.577 UNG)	1/4	H-36-4	
		5/16	H-36-5	
		3/8	H-36-6	
		1/2	H-36-8	
		5/8	H-36-10	
		3/4	H-36-12	
		1	H-36-16	
.3125-.4375 5/16-7/16 7.90-11.00mm	**5/8** .6267-.6264 (.645-.640 UNG)	1/4	H-40-4	
		5/16	H-40-5	
		3/8	H-40-6	
		1/2	H-40-8	
		5/8	H-40-10	
		3/4	H-40-12	
		1	H-40-16	
		1-3/8	H-40-22	
		1-1/2	H-40-24	
		1-3/4	H-40-28	
		2-1/8	H-40-34	
.3125-.5312 5/16-17/32 7.90-13.50mm	**3/4** .7518-.7515 (.770-.765 UNG)	1/4	H-48-4	
		5/16	H-48-5	
		3/8	H-48-6	
		1/2	H-48-8	
		5/8	H-48-10	
		3/4	H-48-12	
		1	H-48-16	
		1-1/4	H-48-20	
		1-3/8	H-48-22	
		1-1/2	H-48-24	
		1-3/4	H-48-28	
		2-1/8	H-48-34	

* Counterbored, leaving correct drill-bushing length and clearance (see page 6 for bearing length).

QUANTITY DISCOUNTS

Quantity	1 -5	6 -11	12 -23	24 -49	50 -99	100 -199	200 -499	500 Up
Discount %	Net	18%	29%	34%	42%	48%	50%	52%
Multiplier	1.00	.82	.71	.66	.58	.52	.50	.48

Carr Lane MANUFACTURING CO.
4200 Carr Lane Ct., P.O. Box 191970
St. Louis, Missouri 63119-7970 USA
Phone: 314-647-6200, FAX: 314-647-5736
Web Site: www.carrlane.com

HEAD PRESS FIT

H

ID RANGE	OD	LENGTH	ANSI PART NO.	PRICE 1-5
.5000-.6562 1/2-21/32 12.50-16.50mm	**7/8** .8768-.8765 (.895-.890 UNG)	1/2	H-56-8	Please see our web catalog for pricing.
		5/8	H-56-10	
		3/4	H-56-12	
		1	H-56-16	
		1-1/4	H-56-20	
		1-3/8	H-56-22	
		1-1/2	H-56-24	
		1-3/4	H-56-28	
		2-1/8	H-56-34	
		2-1/2	H-56-40	
.5000-.7656 1/2-49/64 12.50-19.50mm	**1** 1.0018-1.0015 (1.020-1.015 UNG)	1/2	H-64-8	
		3/4	H-64-12	
		1	H-64-16	
		1-3/8	H-64-22	
		1-1/2	H-64-24	
		1-3/4	H-64-28	
		2-1/8	H-64-34	
		2-1/2	H-64-40	
		3	H-64-48	
.8594-.9375 55/64-15/16 22.00-24.00mm	**1-1/4** 1.2520-1.2517 (1.270-1.265 UNG)	5/8	H-80-10	
		3/4	H-80-12	
		1	H-80-16	
		1-1/4	H-80-20	
		1-1/2	H-80-24	
		1-3/4	H-80-28	
		2	H-80-32	
.6250-1.0312 5/8–1-1/32 16.00-26.00mm	**1-3/8** 1.3772-1.3768 (1.395-1.390 UNG)	1/2	H-88-8	
		3/4	H-88-12	
		1	H-88-16	
		1-3/8	H-88-22	
		1-1/2	H-88-24	
		1-3/4	H-88-28	
		2-1/8	H-88-34	
		2-1/2	H-88-40	
		3	H-88-48	
1.0000-1.3906 1–1-25/64 26.00-35.00mm	**1-3/4** 1.7523-1.7519 (1.770-1.765 UNG)	3/4	H-112-12	
		1	H-112-16	
		1-3/8	H-112-22	
		1-1/2	H-112-24	
		1-3/4	H-112-28	
		2-1/8	H-112-34	
		2-1/2	H-112-40	
		3	H-112-48	
1.3750-1.7656 1-3/8-1-49/64 35.00-45.00mm	**2-1/4** 2.2525-2.2521 (2.270-2.265 UNG)	1	H-144-16	
		1-3/8	H-144-22	
		1-1/2	H-144-24	
		1-3/4	H-144-28	
		2-1/8	H-144-34	
		2-1/2	H-144-40	
		3	H-144-48	

For extended-range bushings (larger sizes) please see our web catalog.

QUANTITY DISCOUNTS

Quantity	1 -5	6 -11	12 -23	24 -49	50 -99	100 -199	200 -499	500 Up
Discount %	Net	18%	29%	34%	42%	48%	50%	52%
Multiplier	1.00	.82	.71	.66	.58	.52	.50	.48

A great speaker is one whose spirit enters the souls of his listeners.

If you have no goals you have nothing to reach for.

MANUFACTURING CO.
4200 Carr Lane Ct., P.O. Box 191970
St. Louis, Missouri 63119-7970 USA
Phone: 314-647-6200, FAX: 314-647-5736
Web Site: www.carrlane.com

(7/04)

HEAD PRESS FIT CARBIDE

HC

ID RANGE	OD	LENGTH	ANSI PART NO.	PRICE 1-5
.0280-.0468 #70-#56 .75-1.15mm	**5/32** .1578-.1575	5/16	HC-10-5	Contact Factory
		1/2	HC-10-8	
.0469-.0625 3/64-1/16 1.20-1.55mm		5/16	HC-10-5	Contact Factory
		1/2	HC-10-8	
.0550-.0995 #54-#39 1.40-2.50mm	**13/64** .2046-.2043	5/16	HC-13-5	Contact Factory
		1/2	HC-13-8	
.0995-.1360 #39-#29 2.55-3.40mm	**1/4** .2516-.2513	5/16	HC-16-5	Contact Factory
		1/2	HC-16-8	
.1285-.1875 #30-3/16 3.30-4.75mm	**5/16** .3141-.3138	5/16	HC-20-5	Contact Factory
		1/2	HC-20-8	
		3/4	HC-20-12	
		1	HC-20-16	
.1875-.2500 3/16-1/4 4.80-6.30mm	**13/32** .4078-.4075	5/16	HC-26-5	Contact Factory
		1/2	HC-26-8	
		3/4	HC-26-12	
		1	HC-26-16	
.2188-.3125 7/32-5/16 5.60-7.90mm	**1/2** .5017-.5014	5/16	HC-32-5	Contact Factory
		1/2	HC-32-8	
		3/4	HC-32-12	
		1	HC-32-16	
		1-3/8	HC-32-22	
.3125-.4219 5/16-27/64 8.00-10.50mm	**5/8** .6267-.6264	1/2	HC-40-8	Contact Factory
		3/4	HC-40-12	
		1	HC-40-16	
		1-3/8	HC-40-22	
.3750-.5000 3/8-1/2 9.60-12.50mm	**3/4** .7518-.7515	1/2	HC-48-8	Contact Factory
		3/4	HC-48-12	
		1	HC-48-16	
		1-3/8	HC-48-22	
.5000-.6250 1/2-5/8 13.00-15.50mm	**7/8** .8768-.8765	1/2	HC-56-8	Contact Factory
		3/4	HC-56-12	
		1	HC-56-16	
		1-3/8	HC-56-22	
		1-3/4	HC-56-28	

Note: Due to manufacturing requirements, head dimensions of some carbide bushings may differ slightly from ANSI standards. Most carbide bushings have steel heads.

ID RANGE	OD	LENGTH	ANSI PART NO.	PRICE 1-5
.5000-.7500 1/2-3/4 13.00-19.00mm	**1** 1.0018-1.0015	1/2	HC-64-8	Contact Factory
		3/4	HC-64-12	
		1	HC-64-16	
		1-3/8	HC-64-22	
		1-3/4	HC-64-28	
.7500-1.0000 3/4-1 19.50-25.00mm	**1-3/8** 1.3772-1.3768	3/4	HC-88-12	Contact Factory
		1	HC-88-16	
		1-3/8	HC-88-22	
		1-3/4	HC-88-28	
		2-1/8	HC-88-34	
		2-1/2	HC-88-40	
1.0000-1.3750 1-–1-3/8 26.00-34.00mm	**1-3/4** 1.7523-1.7519	1	HC-112-16	Contact Factory
		1-3/8	HC-112-22	
		1-3/4	HC-112-28	
		2	HC-112-32	
		2-1/8	HC-112-34	
		2-1/2	HC-112-40	
		3	HC-112-48	
1.3750-1.7500 1-3/8–1-3/4 35.00-44.00mm	**2-1/4** 2.2525-2.2521	1	HC-144-16	Contact Factory
		1-3/8	HC-144-22	
		1-3/4	HC-144-28	
		2-1/8	HC-144-34	
		2-1/2	HC-144-40	
		3	HC-144-48	

180° Pivot

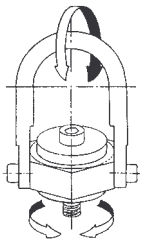

360° Rotation

What pivots 180° and takes more tugging than an eye bolt?

Swivel Hoist Rings — from Carr Lane, of course.

Carr Lane MANUFACTURING CO.
4200 Carr Lane Ct., P.O. Box 191970
St. Louis, Missouri 63119-7970 USA
Phone: 314-647-6200, FAX: 314-647-5736
Web Site: www.carrlane.com

HM

HEAD PRESS FIT METRIC

ID RANGE (G6)	OD (s6)	LENGTH	ANSI PART NO.	PRICE 1-5
.35-1.00mm	4mm 4.027-4.019mm	*6mm	HM-4-6	Please see our web catalog for pricing.
		*9mm	HM-4-9	
1.01-1.80mm		6mm	HM-4-6	
		9mm	HM-4-9	
1.81-2.60mm	5mm 5.027-5.019mm	6mm	HM-5-6	
		9mm	HM-5-9	
2.61-3.30mm	6mm 6.027-6.019mm	8mm	HM-6-8	
		12mm	HM-6-12	
		16mm	HM-6-16	
3.31-4.00mm	7mm 7.032-7.023mm	8mm	HM-7-8	
		12mm	HM-7-12	
		16mm	HM-7-16	
4.01-5.00mm	8mm 8.032-8.023mm	8mm	HM-8-8	
		12mm	HM-8-12	
		16mm	HM-8-16	
5.01-6.00mm	10mm 10.032-10.023mm	10mm	HM-10-10	
		16mm	HM-10-16	
		20mm	HM-10-20	
6.01-8.00mm	12mm 12.039-12.028mm	10mm	HM-12-10	
		16mm	HM-12-16	
		20mm	HM-12-20	
8.01-10.00mm	15mm 15.039-15.028mm	12mm	HM-15-12	
		20mm	HM-15-20	
		25mm	HM-15-25	
10.01-12.00mm	18mm 18.039-18.028mm	12mm	HM-18-12	
		20mm	HM-18-20	
		25mm	HM-18-25	
12.01-15.00mm	22mm 22.048-22.035mm	16mm	HM-22-16	
		28mm	HM-22-28	
		36mm	HM-22-36	
15.01-18.00mm	26mm 26.048-26.035mm	16mm	HM-26-16	
		28mm	HM-26-28	
		36mm	HM-26-36	
18.01-22.00mm	30mm 30.048-30.035mm	20mm	HM-30-20	
		36mm	HM-30-36	
		45mm	HM-30-45	
22.01-26.00mm	35mm 35.059-35.043mm	20mm	HM-35-20	
		36mm	HM-35-36	
		45mm	HM-35-45	
26.01-30.00mm	42mm 42.059-42.043mm	25mm	HM-42-25	
		45mm	HM-42-45	
		56mm	HM-42-56	
30.01-35.00mm	48mm 48.059-48.043mm	25mm	HM-48-25	
		45mm	HM-48-45	
		56mm	HM-48-56	
35.01-42.00mm	55mm 55.072-55.053mm	30mm	HM-55-30	
		56mm	HM-55-56	
		67mm	HM-55-67	
42.01-48.00mm	62mm 62.072-62.053mm	30mm	HM-62-30	
		56mm	HM-62-56	
		67mm	HM-62-67	

ID RANGE (G6)	OD (s6)	LENGTH	ANSI PART NO.	PRICE 1-5
48.01-55.00mm	70mm 70.078-70.059mm	30mm	HM-70-30	Please see our web catalog for pricing.
		56mm	HM-70-56	
		67mm	HM-70-67	
55.01-63.00mm	78mm 78.078-78.059mm	35mm	HM-78-35	
		67mm	HM-78-67	
		78mm	HM-78-78	
63.01-70.00mm	85mm 85.093-85.071mm	35mm	HM-85-35	
		67mm	HM-85-67	
		78mm	HM-85-78	
70.01-78.00mm	95mm 95.093-95.071mm	40mm	HM-95-40	
		78mm	HM-95-78	
		105mm	HM-95-105	
78.01-85.00mm	105mm 105.101-105.079mm	40mm	HM-105-40	
		78mm	HM-105-78	
		105mm	HM-105-105	
85.01-95.00mm	115mm 115.101-115.079mm	45mm	HM-115-45	
		89mm	HM-115-89	
		112mm	HM-115-112	
95.01-105.00mm	125mm 125.117-125.092mm	45mm	HM-125-45	
		89mm	HM-125-89	
		112mm	HM-125-112	

* Small metric drill sizes through .80mm are counterbored 1.00mm diameter, with 3mm drill-bearing length.

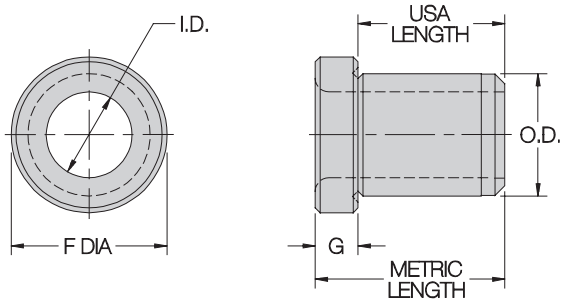

Note: The "length" listed on this page for a metric head-press-fit bushing refers to its overall length, while the USA version's "length" is its length under the head.

QUANTITY DISCOUNTS

Quantity	1 -5	6 -11	12 -23	24 -49	50 -99	100 -199	200 -499	500 Up
Discount %	Net	18%	29%	34%	42%	48%	50%	52%
Multiplier	1.00	.82	.71	.66	.58	.52	.50	.48

CARR LANE:

We're often imitated . . . but never duplicated!

Carr Lane®
MANUFACTURING CO.
4200 Carr Lane Ct., P.O. Box 191970
St. Louis, Missouri 63119-7970 USA
Phone: 314-647-6200, FAX: 314-647-5736
Web Site: www.carrlane.com

SERRATED PRESS FIT SP

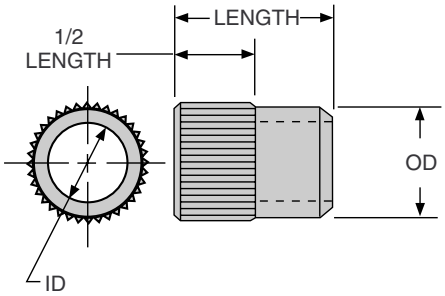

APPLICATIONS:

Similar to a P bushing, but with top serrations to prevent rotation in soft materials. Recommended in high-torque situations for materials such as magnesium, aluminum, masonite, or wood. Finish-ground OD ensures accurate ID location. Serrations also resist axial force to prevent pushing the bushing through the jig plate.

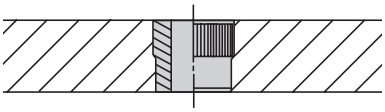

ORDERING EXAMPLES:

SP-26-16-.1875	Standard USA bushing, inch ID
SP-26-16-.1772	Standard USA bushing, mm ID (.1772 - 4.50mm)
SP-26-16-.1875 REAMER	Reamer tolerance on ID
SP-26-16-.1875 NCB	No counterbore on long bushings marked with * (no counterbore is standard on all other bushings)
SPM-8-12-4.50	Standard metric bushing

Prices shown here apply to standard bushings only, for a standard drill size within the stated ID range. See back cover for decimal equivalents. To price non-standard sizes, including all reamer and tap-guide bushings, see page 7.

ID RANGE	OD	LENGTH	ANSI PART NO.	PRICE 1-5
.0520-.0995 #55-#39 1.35-2.50mm	**13/64** .2031-.2029	1/4	SP-13-4	Please see our web catalog for pricing.
		5/16	SP-13-5	
		3/8	SP-13-6	
		1/2	SP-13-8	
.0980-.1406 #40-9/64 2.50-3.50mm	**1/4** .2500-.2498	1/4	SP-16-4	
		5/16	SP-16-5	
		3/8	SP-16-6	
		1/2	SP-16-8	
.1250-.1935 1/8-#10 3.20-4.90mm	**5/16** .3125-.3123	1/4	SP-20-4	
		5/16	SP-20-5	
		3/8	SP-20-6	
		1/2	SP-20-8	
		3/4	SP-20-12	
.1562-.2570 5/32-F 4.00-6.50mm	**13/32** .4062-.4060	5/16	SP-26-5	
		3/8	SP-26-6	
		1/2	SP-26-8	
		3/4	SP-26-12	
		*1	SP-26-16	
.1562-.3160 5/32-O 4.00-8.00mm	**1/2** .5000-.4998	5/16	SP-32-5	
		3/8	SP-32-6	
		1/2	SP-32-8	
		3/4	SP-32-12	
		*1	SP-32-16	
.3125-.4375 5/16-7/16 7.90-11.00mm	**5/8** .6250-.6248	3/8	SP-40-6	
		1/2	SP-40-8	
		3/4	SP-40-12	
		1	SP-40-16	
.3125-.5312 5/16-17/32 8.00-13.00mm	**3/4** .7500-.7498	3/8	SP-48-6	
		1/2	SP-48-8	
		3/4	SP-48-12	
		1	SP-48-16	
.5000-.6562 1/2-21/32 13.00-16.50mm	**7/8** .8750-.8748	3/8	SP-56-6	
		1/2	SP-56-8	
		3/4	SP-56-12	
		1	SP-56-16	
.5000-.7656 1/2-49/64 13.00-19.00mm	**1** 1.0000-.9998	1/2	SP-64-8	
		3/4	SP-64-12	
		1	SP-64-16	
		1-3/8	SP-64-22	

* Counterbored, leaving correct drill-bushing length and clearance (see page 6 for bearing length).

STANDARD ID TOLERANCES:

From #55 to 1/4"	+.0001/+.0004	From 1 to 3mm	+.002/+.008mm
		Over 3 to 6mm	+.004/+.012mm
Over 1/4 to 3/4"	+.0001/+.0005	Over 6 to 10mm	+.005/+.014mm
		Over 10 to 18mm	+.006/+.017mm
Over 3/4 to 1-1/2"	+.0002/+.0006	Over 18 to 19mm	+.007/+.020mm
		(G6 tolerance)	

REAMER ID TOLERANCES:

From #60 to 1/4"	+.0005/+.0008	From 1 to 3mm	+.006/+.012mm
		Over 3 to 6mm	+.010/+.018mm
Over 1/4 to 1"	+.0006/+.0010	Over 6 to 10mm	+.013/+.022mm
		Over 10 to 18mm	+.016/+.027mm
		Over 18 to 19mm	+.020/+.033mm
		(F6 tolerance)	

QUANTITY DISCOUNTS

Quantity	1 -5	6 -11	12 -23	24 -49	50 -99	100 -199	200 -499	500 Up
Discount %	Net	18%	29%	34%	42%	48%	50%	52%
Multiplier	1.00	.82	.71	.66	.58	.52	.50	.48

Carr Lane MANUFACTURING CO.
4200 Carr Lane Ct., P.O. Box 191970
St. Louis, Missouri 63119-7970 USA
Phone: 314-647-6200, FAX: 314-647-5736
Web Site: www.carrlane.com

SPM SERRATED PRESS FIT METRIC

ID RANGE (G6)	OD (h5)	LENGTH	ANSI PART NO.	PRICE 1-5
1.00-1.80mm	5mm 5.000-4.995mm	6mm	SPM-5-6	Please see our web catalog for pricing.
		9mm	SPM-5-9	
1.81-2.60mm		6mm	SPM-5-6	
		9mm	SPM-5-9	
2.61-3.30mm	6mm 6.000-5.995mm	8mm	SPM-6-8	
		12mm	SPM-6-12	
		16mm	SPM-6-16	
3.31-4.00mm	7mm 7.000-6.994mm	8mm	SPM-7-8	
		12mm	SPM-7-12	
		16mm	SPM-7-16	
4.01-5.00mm	8mm 8.000-7.994mm	8mm	SPM-8-8	
		12mm	SPM-8-12	
		16mm	SPM-8-16	
5.01-6.00mm	10mm 10.000-9.994mm	10mm	SPM-10-10	
		16mm	SPM-10-16	
		20mm	SPM-10-20	
6.01-8.00mm	12mm 12.000-11.992mm	10mm	SPM-12-10	
		16mm	SPM-12-16	
		20mm	SPM-12-20	
8.01-10.00mm	15mm 15.000-14.992mm	12mm	SPM-15-12	
		20mm	SPM-15-20	
		25mm	SPM-15-25	
10.01-12.00mm	18mm 18.000-17.992mm	12mm	SPM-18-12	
		20mm	SPM-18-20	
		25mm	SPM-18-25	
12.01-15.00mm	22mm 22.000-21.991mm	16mm	SPM-22-16	
		28mm	SPM-22-28	
		36mm	SPM-22-36	
15.01-18.00mm	26mm 26.000-25.991mm	16mm	SPM-26-16	
		28mm	SPM-26-28	
		36mm	SPM-26-36	

QUANTITY DISCOUNTS

Quantity	1 -5	6 -11	12 -23	24 -49	50 -99	100 -199	200 -499	500 Up
Discount %	Net	18%	29%	34%	42%	48%	50%	52%
Multiplier	1.00	.82	.71	.66	.58	.52	.50	.48

We Make Tooling Simple

The world's largest manufacturer of tooling components has the parts you need for today's changing industry. We can save you time, since you don't have to look for several tooling sources. Most of our items are available in both metric and U.S sizes. Many items are available in stainless steel. Send for our free illustrated catalog with the widest assortment of tooling components anywhere.

- Specialty Clamps
- Spring-Loaded Devices
- Locators
- Nuts, Bolts, Washers, Screws
- Clamps Straps
- Jig and Fixture Bases
- Plug Gages
- Supports, Rests and Feet
- Threaded Inserts
- CAD/CAM Tooling Library

Handles & Knobs

Alignment Pins

Toggle Clamps

Drill Bushings

Chuck Jaws

Modular Fixturing

Hoist Rings

Carr Lane® MANUFACTURING CO.
4200 Carr Lane Ct., P.O. Box 191970
St. Louis, Missouri 63119-7970 USA
Phone: 314-647-6200, FAX: 314-647-5736
Web Site: www.carrlane.com

(7/01)

SLIP/FIXED RENEWABLE SF

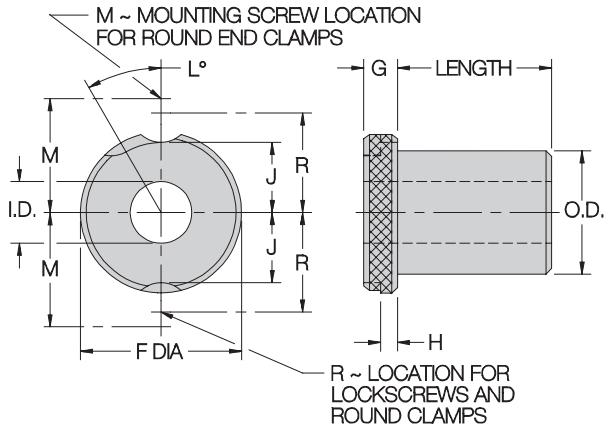

APPLICATIONS:

Replaceable bushing generally used with a liner bushing and lockscrew. Use when you expect to replace bushings during the tooling's lifetime, or when you want to switch bushings to perform multi-step operations with the same tooling. SF bushings combine the benefits of older S-type slip-renewable and F-type fixed-renewable bushings: One side has a small recess for fixed mounting; the other has a locking recess that allows the bushing to slip down, then lock in place by rotating it. S and F types are now obsolete (except in carbide) and combination SF bushings will be furnished at no extra charge.

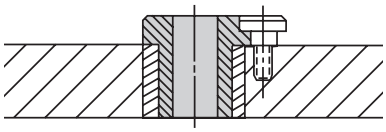

USA

BODY OD	F DIA	G	H	J	L	M	R	LOCK SCREW
3/16	5/16	3/16	3/32	3/32	55°		17/64	LS-0
1/4	7/16	1/4	1/8	9/64	30°		23/64	TW-2
5/16	35/64			11/64	65°	5/8	1/2	LS-1
3/8	5/8			15/64	30°		29/64	TW-2
7/16	5/8			15/64	30°		29/64	TW-2
1/2	51/64			19/64	65°	3/4	5/8	LS-1
9/16	7/8			23/64	65°		37/64	TW-2
5/8	7/8			23/64	30°		37/64	TW-2
3/4	1-3/64			27/64	50°	7/8	3/4	LS-1
7/8	1-1/4	3/8	3/16	31/64	30°		53/64	TW-7
1	1-27/64			19/32	35°	1-7/64	59/64	LS-2
1-1/4	1-5/8			43/64	30°		1-1/64	
1-3/8	1-51/64			25/32	30°	1-19/64	1-7/64	
1-1/2	1-7/8			51/64	30°		1-9/64	
1-3/4	2-19/64	3/8	3/16	1	30°	1-41/64	1-25/64	LS-3
2-1/4	2-51/64			1-1/4	25°	1-57/64	1-41/64	

ORDERING EXAMPLES:

SF-20-16-.1250	Standard USA bushing, inch ID
SF-20-16-.1772	Standard USA bushing, mm ID (.1772 = 4.50mm)
SF-20-16-.1250 REAMER	Reamer tolerance on ID
SF-20-16-.1250 NCB	No counterbore on long bushings marked with * (no counterbore is standard on all other bushings)
SFC-20-16-.1250	Carbide bushing
SFM-8-16-4.50	Standard metric bushing

Prices shown here apply to standard bushings only, for a standard drill size within the stated ID range. See back cover for decimal equivalents. To price non-standard sizes, including all reamer and tap-guide bushings, see page 7.

METRIC

BODY OD	F DIA	G	H	J	L	M	R	LOCK SCREW
8mm	15mm	6mm	3mm	4.5mm	65°		11.5mm	LSM-1
10mm	18mm			6mm	65°		13mm	LSM-2
12mm	22mm	8mm	4mm	7.5mm	60°		16mm	LSM-3 LSM-4
15mm	26mm			9.5mm	50°		18mm	
18mm	30mm			11.5mm	50°		20mm	
22mm	34mm	10mm	5.5mm	13mm	35°		23.5mm	LSM-5 LSM-6
26mm	39mm			15.5mm	35°		26mm	
30mm	46mm			19mm	30°		29.5mm	
35mm	52mm			22mm	30°		32.5mm	
42mm	59mm			25.5mm	30°		36mm	
48mm	66mm	12mm	7mm	28.5mm	30°		41mm	LSM-7 LSM-8
55mm	74mm			32.5mm	25°		45mm	
62mm	82mm			36.5mm	25°		49mm	
70mm	90mm			40.5mm	25°		53mm	
78mm	100mm			45.5mm	25°		58mm	
85mm	110mm			50.5mm	20°		63mm	
95mm	120mm			55.5mm	20°		68mm	
105mm	130mm			60.5mm	20°		73mm	

STANDARD ID TOLERANCES:

From #80 to 1/4"	+.0001/+.0004	From .35 to 3mm	+.002/+.008mm
		Over 3 to 6mm	+.004/+.012mm
Over 1/4 to 3/4"	+.0001/+.0005	Over 6 to 10mm	+.005/+.014mm
		Over 10 to 18mm	+.006/+.017mm
Over 3/4 to 1-1/2"	+.0002/+.0006	Over 18 to 30mm	+.007/+.020mm
		Over 30 to 50mm	+.009/+.025mm
Over 1-1/2 to 2-3/4"	+.0003/+.0007	Over 50 to 80mm	+.010/+.029mm
		Over 80 to 120mm	+.012/+.034mm

(G6 tolerance)

REAMER ID TOLERANCES:

From #60 to 1/4"	+.0005/+.0008	From 1 to 3mm	+.006/+.012mm
		Over 3 to 6mm	+.010/+.018mm
Over 1/4 to 1"	+.0006/+.0010	Over 6 to 10mm	+.013/+.022mm
		Over 10 to 18mm	+.016/+.027mm
Over 1 to 1-1/2"	+.0008/+.0012	Over 18 to 30mm	+.020/+.033mm

(F6 tolerance)

Carr Lane MANUFACTURING CO.
4200 Carr Lane Ct., P.O. Box 191970
St. Louis, Missouri 63119-7970 USA
Phone: 314-647-6200, FAX: 314-647-5736
Web Site: www.carrlane.com

SF SLIP/FIXED RENEWABLE

ID RANGE	OD	LENGTH	ANSI PART NO.	PRICE 1-5	LOCK SCREW
.0135-.0291 #80-#70 .35-.70mm	**3/16** .1875-.1873	*1/4	SF-12-4	Please see our web catalog for pricing.	LS-0
		*5/16	SF-12-5		
		*3/8	SF-12-6		
		*1/2	SF-12-8		
		*5/8	SF-12-10		
		*3/4	SF-12-12		
.0292-.0519 #69-3/64 .75-1.25mm		1/4	SF-12-4		
		*5/16	SF-12-5		
		*3/8	SF-12-6		
		*1/2	SF-12-8		
		*5/8	SF-12-10		
		*3/4	SF-12-12		
.0520-.0634 #55-1/16 1.30-1.60mm		1/4	SF-12-4		
		*5/16	SF-12-5		
		*3/8	SF-12-6		
		*1/2	SF-12-8		
		*5/8	SF-12-10		
		*3/4	SF-12-12		
.0635-.0980 #52-#40 1.65-2.50mm		1/4	SF-12-4		
		*5/16	SF-12-5		
		*3/8	SF-12-6		
		*1/2	SF-12-8		
		*5/8	SF-12-10		
		*3/4	SF-12-12		
.0995-.1405 #39-#28 2.55-3.50mm	**1/4** .2500-.2498	1/4	SF-16-4		TW-2
		5/16	SF-16-5		
		*3/8	SF-16-6		
		*1/2	SF-16-8		
		*5/8	SF-16-10		
		*3/4	SF-16-12		

ID RANGE	OD	LENGTH	ANSI PART NO.	PRICE 1-5	LOCK SCREW
.0135-.0291 #80-#70 .35-.70mm	**5/16** .3125-.3123	*1/4	SF-20-4	Please see our web catalog for pricing.	LS-1 RC-01 RK-01 RK-10
		*5/16	SF-20-5		
		*3/8	SF-20-6		
		*1/2	SF-20-8		
		*3/4	SF-20-12		
.0292-.0519 #69-3/64 .75-1.30mm		*5/16	SF-20-5		
		*3/8	SF-20-6		
		*1/2	SF-20-8		
		*3/4	SF-20-12		
.0520-.0634 #55-1/16 1.35-1.60mm		*5/16	SF-20-5		
		*3/8	SF-20-6		
		*1/2	SF-20-8		
		*3/4	SF-20-12		
.0635-.0934 #52-#43 1.65-2.35mm		5/16	SF-20-5		
		*3/8	SF-20-6		
		*1/2	SF-20-8		
		*3/4	SF-20-12		
		*1	SF-20-16		
.0935-.1249 #42-#31 2.40-3.15mm		5/16	SF-20-5		
		3/8	SF-20-6		
		*1/2	SF-20-8		
		*3/4	SF-20-12		
		*1	SF-20-16		
		*1-3/8	SF-20-22		
.1250-.1935 1/8-#10 3.20-4.90mm		5/16	SF-20-5		
		3/8	SF-20-6		
		1/2	SF-20-8		
		5/8	SF-20-10		
		*3/4	SF-20-12		
		*1	SF-20-16		
		*1-3/8	SF-20-22		
.1935-.2280 #10-#1 4.90-5.80mm	**3/8** .3750-.3748	1/4	SF-24-4		TW-2
		5/16	SF-24-5		
		3/8	SF-24-6		
		1/2	SF-24-8		
		5/8	SF-24-10		
		3/4	SF-24-12		
		*1	SF-24-16		
.2340-.2900 A-L 5.90-7.40mm	**7/16** .4375-.4373	1/4	SF-28-4		TW-2
		5/16	SF-28-5		
		3/8	SF-28-6		
		1/2	SF-28-8		
		5/8	SF-28-10		
		3/4	SF-28-12		
		*1	SF-28-16		

* Counterbored, leaving correct drill-bearing length and clearance (see page 6 for bearing length).

Why settle for the rest when you can have the best?

QUANTITY DISCOUNTS

Quantity	1 -5	6 -11	12 -23	24 -49	50 -99	100 -199	200 -499	500 Up
Discount %	Net	18%	29%	34%	42%	48%	50%	52%
Multiplier	1.00	.82	.71	.66	.58	.52	.50	.48

CarrLane® MANUFACTURING CO.
4200 Carr Lane Ct., P.O. Box 191970
St. Louis, Missouri 63119-7970 USA
Phone: 314-647-6200, FAX: 314-647-5736
Web Site: www.carrlane.com

SLIP/FIXED RENEWABLE SF

ID RANGE	OD	LENGTH	ANSI PART NO.	PRICE 1-5	LOCK SCREW
.1405-.1889 #28-3/16 3.60-4.75mm	**1/2** .5000-.4998	5/16	SF-32-5	Please see our web catalog for pricing.	LS-1 RC-01 RK-01 RK-10
		3/8	SF-32-6		
		1/2	SF-32-8		
		*3/4	SF-32-12		
		*1	SF-32-16		
		*1-3/8	SF-32-22		
		*1-1/2	SF-32-24		
		*1-3/4	SF-32-28		
.1890-.3438 #12-11/32 4.80-8.70mm		5/16	SF-32-5		
		3/8	SF-32-6		
		1/2	SF-32-8		
		3/4	SF-32-12		
		*1	SF-32-16		
		*1-3/8	SF-32-22		
		*1-1/2	SF-32-24		
		*1-3/4	SF-32-28		
.2950-.3438 M-11/32 7.50-8.80mm	**9/16** .5625-.5623	*2-1/8	SF-32-34		TW-2
		1/4	SF-36-4		
		5/16	SF-36-5		
		3/8	SF-36-6		
		1/2	SF-36-8		
		5/8	SF-36-10		
		3/4	SF-36-12		
		1	SF-36-16		
.3480-.4375 S-7/16 8.90-11.00mm	**5/8** .6250-.6248	3/8	SF-40-6		TW-2
		1/2	SF-40-8		
		5/8	SF-40-10		
		3/4	SF-40-12		
		1	SF-40-16		
		1-1/4	SF-40-20		
.2812-.5625 9/32-9/16 7.20-14.00mm	**3/4** .7500-.7498	3/8	SF-48-6		LS-1 RC-01 RK-01 RK-11
		1/2	SF-48-8		
		3/4	SF-48-12		
		1	SF-48-16		
		1-3/8	SF-48-22		
		1-1/2	SF-48-24		
		1-3/4	SF-48-28		
		2-1/8	SF-48-34		
		*2-1/2	SF-48-40		
		*3	SF-48-48		
.5469-.6562 35/64-21/32 13.50-16.50mm	**7/8** .8750-.8748	1/2	SF-56-8		TW-7
		5/8	SF-56-10		
		3/4	SF-56-12		
		1	SF-56-16		
		1-1/4	SF-56-20		
		1-1/2	SF-56-24		
.4688-.7812 15/32-25/32 12.00-19.50mm	**1** 1.0000-.9998	1/2	SF-64-8		LS-2 RC-02 RK-02 RK-12
		3/4	SF-64-12		
		1	SF-64-16		
		1-3/8	SF-64-22		
		1-1/2	SF-64-24		
		1-3/4	SF-64-28		
		2-1/8	SF-64-34		
		2-1/2	SF-64-40		
		3	SF-64-48		

* Counterbored, leaving correct drill-bearing length and clearance (see page 6 for bearing length).

ID RANGE	OD	LENGTH	ANSI PART NO.	PRICE 1-5	LOCK SCREW
.7188-1.0625 23/32–1-1/16 18.50-27.00mm	**1-3/8** 1.3750-1.3747	3/4	SF-88-12	Please see our web catalog for pricing.	LS-2 RC-02 RK-02 RK-12
		1	SF-88-16		
		1-3/8	SF-88-22		
		1-1/2	SF-88-24		
		1-3/4	SF-88-28		
		2-1/8	SF-88-34		
		2-1/2	SF-88-40		
		3	SF-88-48		
.9688-1.4062 31/32–1-13/32 25.00-35.00mm	**1-3/4** 1.7500-1.7497	3/4	SF-112-12		LS-3 RC-03 RK-03 RK-14
		1	SF-112-16		
		1-3/8	SF-112-22		
		1-1/2	SF-112-24		
		1-3/4	SF-112-28		
		2-1/8	SF-112-34		
		2-1/2	SF-112-40		
		3	SF-112-48		
1.3438-1.8750 1-11/32–1-7/8 35.00-47.00mm	**2-1/4** 2.2500-2.2496	3/4	SF-144-12		LS-3 RC-03 RK-03 RK-14
		1	SF-144-16		
		1-3/8	SF-144-22		
		1-1/2	SF-144-24		
		1-3/4	SF-144-28		
		2-1/8	SF-144-34		
		2-1/2	SF-144-40		
		3	SF-144-48		

For extended-range bushings (larger sizes) please see our web catalog.

QUANTITY DISCOUNTS

Quantity	1 -5	6 -11	12 -23	24 -49	50 -99	100 -199	200 -499	500 Up
Discount %	Net	18%	29%	34%	42%	48%	50%	52%
Multiplier	1.00	.82	.71	.66	.58	.52	.50	.48

The biggest disappointments come to those who get what's coming to them.

Carr Lane® MANUFACTURING CO.
4200 Carr Lane Ct., P.O. Box 191970
St. Louis, Missouri 63119-7970 USA
Phone: 314-647-6200, FAX: 314-647-5736
Web Site: www.carrlane.com

SFC SLIP/FIXED RENEWABLE CARBIDE

SFC
SLIP/FIXED RENEWABLE

ID RANGE	OD	LENGTH	ANSI PART NO.	PRICE 1-5	LOCK SCREW
.0520-.0934 #55-#43 1.35-2.35mm	**5/16** .3125-.3123	5/16	SFC-20-5	Contact Factory	LS-1 RC-01 RK-01 RK-10
		1/2	SFC-20-8		
		3/4	SFC-20-12		
		1	SFC-20-16		
.0935-.1562 #42-5/32 2.40-3.90mm		5/16	SFC-20-5	Contact Factory	
		1/2	SFC-20-8		
		3/4	SFC-20-12		
		1	SFC-20-16		
.1406-.1889 9/64-3/16 3.60-4.75mm	**1/2** .5000-.4998	5/16	SFC-32-5	Contact Factory	LS-1 RC-01 RK-01 RK-10
		1/2	SFC-32-8		
		3/4	SFC-32-12		
		1	SFC-32-16		
		1-3/8	SFC-32-22		
.1890-.3438 #12-11/32 4.80-8.70mm		5/16	SFC-32-5	Contact Factory	
		1/2	SFC-32-8		
		3/4	SFC-32-12		
		1	SFC-32-16		
		1-3/8	SFC-32-22		
.2812-.5312 9/32-17/32 7.20-13.00mm	**3/4** .7500-.7498	1/2	SFC-48-8	Contact Factory	LS-1 RC-01 RK-01 RK-10
		3/4	SFC-48-12		
		1	SFC-48-16		
		1-3/8	SFC-48-22		
.4688-.7812 15/32-25/32 12.00-19.50mm	**1** 1.0000-.9998	1/2	SFC-64-8	Contact Factory	LS-2 RC-02 RK-02 RK-12
		3/4	SFC-64-12		
		1	SFC-64-16		
		1-3/8	SFC-64-22		
		1-3/4	SFC-64-28		
.7188-1.0312 23/32 - 1-1/32 18.50-27.00mm	**1-3/8** 1.3750-1.3747	3/4	SFC-88-12	Contact Factory	LS-2 RC-02 RK-02 RK-12
		1	SFC-88-16		
		1-3/8	SFC-88-22		
		1-3/4	SFC-88-28		
		2-1/8	SFC-88-34		
		2-1/2	SFC-88-40		
.9688-1.4062 31/32 - 1-13/32 25.00-35.00mm	**1-3/4** 1.7500-1.7497	1	SFC-112-16	Contact Factory	LS-3 RC-03 RK-03 RK-14
		1-3/8	SFC-112-22		
		1-3/4	SFC-112-28		
		2-1/8	SFC-112-34		
		2-1/2	SFC-112-40		
		3	SFC-112-48		
1.3438-1.7812 1-11/32 - 1-25/32 35.00-45.00mm	**2-1/4** 2.2500-2.2496	1	SFC-144-16	Contact Factory	LS-3 RC-03 RK-03 RK-14
		1-3/8	SFC-144-22		
		1-3/4	SFC-144-28		
		2-1/8	SFC-144-34		
		2-1/2	SFC-144-40		
		3	SFC-144-48		

SC
SLIP RENEWABLE

ANSI PART NO.	PRICE 1-5
SC-20-5	Contact Factory
SC-20-8	
SC-20-12	
SC-20-16	
SC-20-5	Contact Factory
SC-20-8	
SC-20-12	
SC-20-16	
SC-32-5	Contact Factory
SC-32-8	
SC-32-12	
SC-32-16	
SC-32-22	
SC-32-5	Contact Factory
SC-32-8	
SC-32-12	
SC-32-16	
SC-32-22	
SC-48-8	Contact Factory
SC-48-12	
SC-48-16	
SC-48-22	
SC-64-8	Contact Factory
SC-64-12	
SC-64-16	
SC-64-22	
SC-64-28	
SC-88-12	Contact Factory
SC-88-16	
SC-88-22	
SC-88-28	
SC-88-34	
SC-88-40	
SC-112-16	Contact Factory
SC-112-22	
SC-112-28	
SC-112-34	
SC-112-40	
SC-112-48	
SC-144-16	Contact Factory
SC-144-22	
SC-144-28	
SC-144-34	
SC-144-40	
SC-144-48	

FC
FIXED RENEWABLE

ANSI PART NO.	PRICE 1-5
FC-20-5	Contact Factory
FC-20-8	
FC-20-12	
FC-20-16	
FC-20-5	Contact Factory
FC-20-8	
FC-20-12	
FC-20-16	
FC-32-5	Contact Factory
FC-32-8	
FC-32-12	
FC-32-16	
FC-32-22	
FC-32-5	Contact Factory
FC-32-8	
FC-32-12	
FC-32-16	
FC-32-22	
FC-48-8	Contact Factory
FC-48-12	
FC-48-16	
FC-48-22	
FC-64-8	Contact Factory
FC-64-12	
FC-64-16	
FC-64-22	
FC-64-28	
FC-88-12	Contact Factory
FC-88-16	
FC-88-22	
FC-88-28	
FC-88-34	
FC-88-40	
FC-112-16	Contact Factory
FC-112-22	
FC-112-28	
FC-112-34	
FC-112-40	
FC-112-48	
FC-144-16	Contact Factory
FC-144-22	
FC-144-28	
FC-144-34	
FC-144-40	
FC-144-48	

Note: Due to manufacturing requirements, head dimensions of some carbide bushings may differ slightly from ANSI standards. Most carbide bushings have steel heads.

Carr Lane®
MANUFACTURING CO.
4200 Carr Lane Ct., P.O. Box 191970
St. Louis, Missouri 63119-7970 USA
Phone: 314-647-6200, FAX: 314-647-5736
Web Site: www.carrlane.com

(8/03)

SLIP/FIXED RENEWABLE METRIC

SFM

ID RANGE (G6)	OD (h5)	LENGTH	ANSI PART NO.	PRICE 1-5	LOCK SCREW
.35-1.00mm	8mm 8.000-7.994mm	*10mm	SFM-8-10	Please see our web catalog for pricing.	LSM-1 LSM-2 RCM-1 RCM-2
		*16mm	SFM-8-16		
1.01-1.80mm		10mm	SFM-8-10		
		16mm	SFM-8-16		
1.81-4.00mm		10mm	SFM-8-10		
		16mm	SFM-8-16		
4.01-6.00mm	10mm 10.000-9.994mm	12mm	SFM-10-12		
		20mm	SFM-10-20		
		25mm	SFM-10-25		
6.01-8.00mm	12mm 12.000-11.992mm	12mm	SFM-12-12		LSM-3 LSM-4 RCM-3 RCM-4
		20mm	SFM-12-20		
		25mm	SFM-12-25		
8.01-10.00mm	15mm 15.000-14.992mm	16mm	SFM-15-16		
		28mm	SFM-15-28		
		36mm	SFM-15-36		
10.01-12.00mm	18mm 18.000-17.992mm	16mm	SFM-18-16		
		28mm	SFM-18-28		
		36mm	SFM-18-36		
12.01-15.00mm	22mm 22.000-21.991mm	20mm	SFM-22-20		LSM-5 LSM-6 RCM-5 RCM-6
		36mm	SFM-22-36		
		45mm	SFM-22-45		
15.01-18.00mm	26mm 26.000-25.991mm	20mm	SFM-26-20		
		36mm	SFM-26-36		
		45mm	SFM-26-45		
18.01-22.00mm	30mm 30.000-29.991mm	25mm	SFM-30-25		
		45mm	SFM-30-45		
		56mm	SFM-30-56		
22.01-26.00mm	35mm 35.000-34.989mm	25mm	SFM-35-25		
		45mm	SFM-35-45		
		56mm	SFM-35-56		
26.01-30.00mm	42mm 42.000-41.989mm	30mm	SFM-42-30		
		56mm	SFM-42-56		
		67mm	SFM-42-67		
30.01-35.00mm	48mm 48.000-47.989mm	30mm	SFM-48-30		LSM-7 LSM-8 RCM-7 RCM-8
		56mm	SFM-48-56		
		67mm	SFM-48-67		
35.01-42.00mm	55mm 55.000-54.987mm	30mm	SFM-55-30		
		56mm	SFM-55-56		
		67mm	SFM-55-67		
42.01-48.00mm	62mm 62.000-61.987mm	35mm	SFM-62-35		
		67mm	SFM-62-67		
		78mm	SFM-62-78		

ID RANGE (G6)	OD (h5)	LENGTH	ANSI PART NO.	PRICE 1-5	LOCK SCREW
48.01-55.00mm	70mm 70.000-69.987mm	35mm	SFM-70-35	Please see our web catalog for pricing.	LSM-7 LSM-8 RCM-7 RCM-8
		67mm	SFM-70-67		
		78mm	SFM-70-78		
55.01-62.00mm	78mm 78.000-77.987mm	40mm	SFM-78-40		
		78mm	SFM-78-78		
		105mm	SFM-78-105		
62.01-70.00mm	85mm 85.000-84.985mm	40mm	SFM-85-40		
		78mm	SFM-85-78		
		105mm	SFM-85-105		
70.01-78.00mm	95mm 95.000-94.985mm	45mm	SFM-95-45		
		89mm	SFM-95-89		
		112mm	SFM-95-112		
78.01-85.00mm	105mm 105.000-104.985mm	45mm	SFM-105-45		
		89mm	SFM-105-89		
		112mm	SFM-105-112		

* Small metric drill sizes through .80mm are counterbored 1.00mm diameter, with 3mm drill-bearing length.

QUANTITY DISCOUNTS

Quantity	1 -5	6 -11	12 -23	24 -49	50 -99	100 -199	200 -499	500 Up
Discount %	Net	18%	29%	34%	42%	48%	50%	52%
Multiplier	1.00	.82	.71	.66	.58	.52	.50	.48

He that won't be counselled can't be helped.

-Ben Franklin

Carr Lane® MANUFACTURING CO.
4200 Carr Lane Ct., P.O. Box 191970
St. Louis, Missouri 63119-7970 USA
Phone: 314-647-6200, FAX: 314-647-5736
Web Site: www.carrlane.com

FM FLAT MILLED RENEWABLE

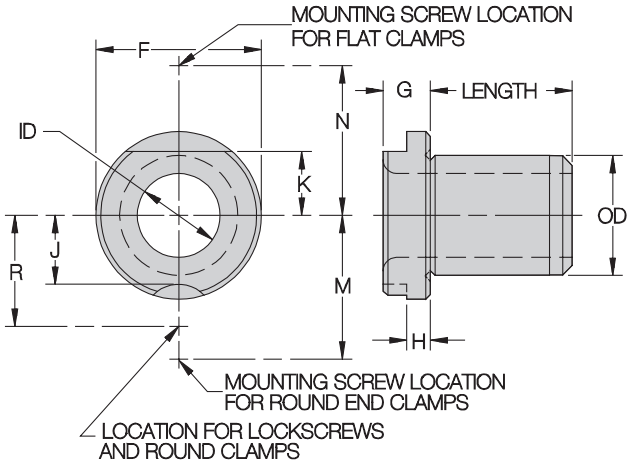

BODY OD	F	G	H	J	K	M	N	R	FLAT CLAMP	LOCK SCREW
5/16	35/64	1/4	1/8	11/64	11/64	5/8	11/16	1/2	FC-01 FC-10	LS-1
1/2	51/64			19/64	17/64	3/4	25/32	5/8		
3/4	1-3/64			27/64	25/64	7/8	57/64	3/4		
1	1-27/64	3/8	3/16	19/32	1/2	1-7/64	1-9/64	59/64	FC-02 FC-12	LS-2
1-3/8	1-51/64			25/32	11/16	1-19/64	1-21/64	1-7/64		
1-3/4	2-19/64	3/8	3/16	1	7/8	1-41/64	1-33/64	1-25/64	FC-03 FC-14 FC-15	LS-3
2-1/4	2-51/64			1-1/4	1-1/8	1-57/64	1-49/64	1-41/64		

APPLICATIONS:

Replaceable bushing used for extra resistance to rotational forces under harsh conditions. This bushing, generally used with a liner, has a milled locking flat to allow fastening securely with a flat clamp. FM bushings also have a standard recess on the other side to allow using a lockscrew instead.

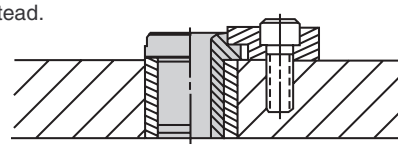

ORDERING EXAMPLES:

FM-20-16-.1250	Standard USA Bushing, inch ID
FM-20-16-.1772	Standard USA Bushing, mm ID (.1772 = 4.50mm)
FM-20-16-.1250 REAMER	Reamer Tolerance on ID
FM-20-16-.1250 NCB	No counterbore on long bushings marked with * (no counterbore is standard on all other bushings)
FMC-20-16-.1250	Carbide Bushing

Prices shown here apply to standard bushings only, for a standard drill size within the stated ID range. See back cover for decimal equivalents. To price non-standard sizes, including all reamer and tap-guide bushings, see page 7.

STANDARD ID TOLERANCES:

From #80 to 1/4"	+.0001/+.0004	From .35 to 3mm	+.002/+.008mm
		Over 3 to 6mm	+.004/+.012mm
Over 1/4 to 3/4"	+.0001/+.0005	Over 6 to 10mm	+.005/+.014mm
		Over 10 to 18mm	+.006/+.017mm
Over 3/4 to1-1/2"	+.0002/+.0006	Over 18 to 30mm	+.007/+.020mm
		Over 30 to 50mm	+.009/+.025mm
Over 1-1/2 to 2-3/4"	+.0003/+.0007	(G6 tolerance)	

REAMER ID TOLERANCES:

From #60 to 1/4"	+.0005/+.0008	From 1 to 3mm	+.006/+.012mm
		Over 3 to 6mm	+.010/+.018mm
Over 1/4 to 1"	+.0006/+.0010	Over 6 to 10mm	+.013/+.022mm
		Over 10 to 18mm	+.016/+.027mm
Over 1" to 1-1/2"	+.0008/+.0012	Over 18 to 30mm	+.020/+.033mm
		(F6 tolerance)	

ID RANGE	OD	LENGTH	ANSI PART NO.	PRICE 1-5	CLAMP
.0135-.0291 #80-#70 .35-.70mm	5/16 .3125-.3123	*1/4	FM-20-4	Please see our web catalog for pricing.	FC-01 FC-10 LS-1 RC-01 RK-01 RK-10
		*5/16	FM-20-5		
		*3/8	FM-20-6		
		*1/2	FM-20-8		
		*3/4	FM-20-12		
.0292-.0519 #69-3/64 .75-1.30mm		*5/16	FM-20-5		
		*3/8	FM-20-6		
		*1/2	FM-20-8		
		*3/4	FM-20-12		
.0520-.0634 #55-1/16 1.35-1.60mm		*5/16	FM-20-5		
		*3/8	FM-20-6		
		*1/2	FM-20-8		
		*3/4	FM-20-12		
.0635-.0934 #52-#43 1.65-2.35mm		5/16	FM-20-5		
		*3/8	FM-20-6		
		*1/2	FM-20-8		
		*3/4	FM-20-12		
		*1	FM-20-16		
.0935-.1249 #42-#31 2.40-3.15mm		5/16	FM-20-5		
		3/8	FM-20-6		
		*1/2	FM-20-8		
		*3/4	FM-20-12		
		*1	FM-20-16		
		*1-3/8	FM-20-22		
.1250-.1935 1/8-#10 3.20-4.90mm		5/16	FM-20-5		
		3/8	FM-20-6		
		1/2	FM-20-8		
		5/8	FM-20-10		
		*3/4	FM-20-12		
		*1	FM-20-16		
		*1-3/8	FM-20-22		

* Counterbored, leaving correct drill-bearing length and clearance (see page 6 for bearing length).

QUANTITY DISCOUNTS

Quantity	1 -5	6 -11	12 -23	24 -49	50 -99	100 -199	200 -499	500 Up
Discount %	Net	18%	29%	34%	42%	48%	50%	52%
Multiplier	1.00	.82	.71	.66	.58	.52	.50	.48

CarrLane® MANUFACTURING CO.
4200 Carr Lane Ct., P.O. Box 191970
St. Louis, Missouri 63119-7970 USA
Phone: 314-647-6200, FAX: 314-647-5736
Web Site: www.carrlane.com

FLAT MILLED RENEWABLE FM

ID RANGE	OD	LENGTH	ANSI PART NO.	PRICE 1-5	CLAMP
.1405-.1889 #28-3/16 3.60-4.75mm	**1/2** .5000-.4998	5/16	FM-32-5	Please see our web catalog for pricing.	FC-01 FC-10 LS-1 RC-01 RK-01 RK-10
		3/8	FM-32-6		
		1/2	FM-32-8		
		*3/4	FM-32-12		
		*1	FM-32-16		
		*1-3/8	FM-32-22		
		*1-1/2	FM-32-24		
		*1-3/4	FM-32-28		
.1890-.3438 #12-11/32 4.80-8.70mm		5/16	FM-32-5		
		3/8	FM-32-6		
		1/2	FM-32-8		
		3/4	FM-32-12		
		*1	FM-32-16		
		*1-3/8	FM-32-22		
		*1-1/2	FM-32-24		
		*1-3/4	FM-32-28		
		*2-1/8	FM-32-34		
.2812-.5625 9/32-9/16 7.20-14.00mm	**3/4** .7500-.7498	3/8	FM-48-6		FC-01 FC-11 LS-1 RC-01 RK-01 RK-11
		1/2	FM-48-8		
		3/4	FM-48-12		
		1	FM-48-16		
		1-3/8	FM-48-22		
		1-1/2	FM-48-24		
		1-3/4	FM-48-28		
		2-1/8	FM-48-34		
		*2-1/2	FM-48-40		
		*3	FM-48-48		
.4688-.7812 15/32-25/32 12.00-19.50mm	**1** 1.0000-.9998	1/2	FM-64-8		FC-02 FC-12 LS-2 RC-02 RK-02 RK-12
		3/4	FM-64-12		
		1	FM-64-16		
		1-3/8	FM-64-22		
		1-1/2	FM-64-24		
		1-3/4	FM-64-28		
		2-1/8	FM-64-34		
		2-1/2	FM-64-40		
		3	FM-64-48		
.7188-1.0625 23/32 – 1-1/16 18.50-27.00mm	**1-3/8** 1.3750-1.3747	3/4	FM-88-12		FC-02 FC-12 LS-2 RC-02 RK-02 RK-12
		1	FM-88-16		
		1-3/8	FM-88-22		
		1-1/2	FM-88-24		
		1-3/4	FM-88-28		
		2-1/8	FM-88-34		
		2-1/2	FM-88-40		
		3	FM-88-48		

* Counter-bored, leaving correct drill-bearing length and clearance (see page 6 for bearing length).

ID RANGE	OD	LENGTH	ANSI PART NO.	PRICE 1-5	CLAMP
.9688-1.4062 31/32 – 1-13/32 25.00-35.00mm	**1-3/4** 1.7500-1.7497	3/4	FM-112-12	Please see our web catalog for pricing.	FC-03 FC-14 FC-15 LS-3 RC-03 RK-03 RK-14
		1	FM-112-16		
		1-3/8	FM-112-22		
		1-1/2	FM-112-24		
		1-3/4	FM-112-28		
		2-1/8	FM-112-34		
		2-1/2	FM-112-40		
		3	FM-112-48		
1.3438-1.8750 1-11/32 – 1-7/8 35.00-47.00mm	**2-1/4** 2.2500-2.2496	3/4	FM-144-12		FC-03 FC-14 FC-15 LS-3 RC-03 RK-03 RK-14
		1	FM-144-16		
		1-3/8	FM-144-22		
		1-1/2	FM-144-24		
		1-3/4	FM-144-28		
		2-1/8	FM-144-34		
		2-1/2	FM-144-40		
		3	FM-144-48		

For extended-range bushings (larger sizes) please see our web catalog.

Cooperation is doing with a smile what you have to do anyway.

QUANTITY DISCOUNTS

Quantity	1 -5	6 -11	12 -23	24 -49	50 -99	100 -199	200 -499	500 Up
Discount %	Net	18%	29%	34%	42%	48%	50%	52%
Multiplier	1.00	.82	.71	.66	.58	.52	.50	.48

Carr Lane® MANUFACTURING CO.
4200 Carr Lane Ct., P.O. Box 191970
St. Louis, Missouri 63119-7970 USA
Phone: 314-647-6200, FAX: 314-647-5736
Web Site: www.carrlane.com

L LINER

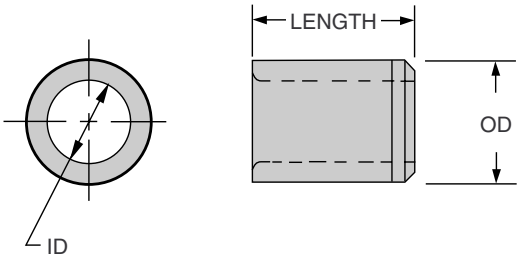

APPLICATIONS:

Liners are permanent bushings used to hold renewable drill bushings. The liner's ID has a precise sliding fit with the renewable bushing's OD. The hardened liner accurately locates the renewable bushing and protects the jig plate from wear caused by frequent bushing replacement. Note: Metric liner bushings are the same as metric press-fit bushings.

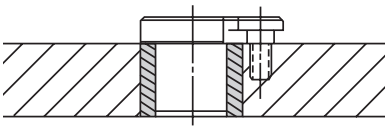

ORDERING EXAMPLES:

L-32-16	Standard USA liner bushing
L-32-16U	Unground OD
L-40-16-24	Standard USA liner bushing with a choice of ID in that OD size
PM-18-25-12.00	Standard metric liner bushing (same as metric press-fit type)

Prices shown here apply to standard bushings only, either ground or unground OD, for a standard ID size.

STANDARD LINER ID TOLERANCES:

3/16 to 3/8"	+.0001/+.0004	8 to 10mm	+.005/+.014mm
7/16 to 5/8"	+.0002/+.0005	12 to 18mm	+.006/+.017mm
3/4"	+.0003/+.0006	22 to 30mm	+.007/+.020mm
7/8 to 1"	+.0004/+.0007	35 to 48mm	+.009/+.025mm
1-3/8"	+.0006/+.0010	55 to 78mm	+.010/+.029mm
1-3/4"	+.0008/+.0012	85 to 105mm	+.012/+.034mm
2-1/4"	+.0010/+.0015	(G6 tolerance)	

ID	OD	LENGTH	ANSI PART NO.	PRICE 1-5
3/16	5/16 .3141-.3138 (.327-.322 UNG)	1/4	L-20-4	Please see our web catalog for pricing.
		5/16	L-20-5	
		3/8	L-20-6	
		1/2	L-20-8	
		5/8	L-20-10	
		3/4	L-20-12	
1/4	7/16 .4392-.4389 (.453-.448 UNG)	1/4	L-28-4	
		5/16	L-28-5	
		3/8	L-28-6	
		1/2	L-28-8	
		5/8	L-28-10	
		3/4	L-28-12	

ID	OD	LENGTH	ANSI PART NO.	PRICE 1-5
5/16	1/2 .5017-.5014 (.520-.515 UNG)	1/4	L-32-4	Please see our web catalog for pricing.
		5/16	L-32-5	
		3/8	L-32-6	
		1/2	L-32-8	
		5/8	L-32-10	
		3/4	L-32-12	
		1	L-32-16	
		1-3/8	L-32-22	
	9/16 .5642-.5639 (.582-.577 UNG)	1/4	L-36-4	
		5/16	L-36-5	
		3/8	L-36-6	
		1/2	L-36-8	
		5/8	L-36-10	
		3/4	L-36-12	
		1	L-36-16	
3/8	5/8 .6267-.6264 (.645-.640 UNG)	1/4	L-40-4-24	
		5/16	L-40-5-24	
		3/8	L-40-6-24	
		1/2	L-40-8-24	
		5/8	L-40-10-24	
		3/4	L-40-12-24	
		1	L-40-16-24	
7/16		1/4	L-40-4-28	
		5/16	L-40-5-28	
		3/8	L-40-6-28	
		1/2	L-40-8-28	
		5/8	L-40-10-28	
		3/4	L-40-12-28	
		1	L-40-16-28	
1/2	3/4 .7518-.7515 (.770-.765 UNG)	5/16	L-48-5	
		3/8	L-48-6	
		1/2	L-48-8	
		3/4	L-48-12	
		1	L-48-16	
		1-3/8	L-48-22	
		1-1/2	L-48-24	
		1-3/4	L-48-28	
		2-1/8	L-48-34	
9/16	7/8 .8768-.8765 (.895-.890 UNG)	5/16	L-56-5-36	
		3/8	L-56-6-36	
		1/2	L-56-8-36	
		5/8	L-56-10-36	
		3/4	L-56-12-36	
		1	L-56-16-36	
		1-1/4	L-56-20-36	
5/8		5/16	L-56-5-40	
		3/8	L-56-6-40	
		1/2	L-56-8-40	
		5/8	L-56-10-40	
		3/4	L-56-12-40	
		1	L-56-16-40	
		1-1/4	L-56-20-40	

QUANTITY DISCOUNTS

Quantity	1 -5	6 -11	12 -23	24 -49	50 -99	100 -199	200 -499	500 Up
Discount %	Net	18%	29%	34%	42%	48%	50%	52%
Multiplier	1.00	.82	.71	.66	.58	.52	.50	.48

CarrLane® MANUFACTURING CO.
4200 Carr Lane Ct., P.O. Box 191970
St. Louis, Missouri 63119-7970 USA
Phone: 314-647-6200, FAX: 314-647-5736
Web Site: www.carrlane.com

LINER

L

ID	OD	LENGTH	ANSI PART NO.	PRICE 1-5
3/4	1 1.0018-1.0015 (1.020-1.015 UNG)	1/2	L-64-8	Please see our web catalog for pricing.
		3/4	L-64-12	
		1	L-64-16	
		1-3/8	L-64-22	
		1-1/2	L-64-24	
		1-3/4	L-64-28	
		2-1/8	L-64-34	
		2-1/2	L-64-40	
		3	L-64-48	
7/8	1-1/4 1.2520-1.2517 (1.270-1.265 UNG)	1/2	L-80-8	
		5/8	L-80-10	
		3/4	L-80-12	
		1	L-80-16	
		1-1/4	L-80-20	
		1-1/2	L-80-24	
1	1-3/8 1.3772-1.3768 (1.395-1.390 UNG)	1/2	L-88-8	
		3/4	L-88-12	
		1	L-88-16	
		1-3/8	L-88-22	
		1-1/2	L-88-24	
		1-3/4	L-88-28	
		2-1/8	L-88-34	
		2-1/2	L-88-40	
		3	L-88-48	
1-3/8	1-3/4 1.7523-1.7519 (1.770-1.765 UNG)	3/4	L-112-12	
		1	L-112-16	
		1-3/8	L-112-22	
		1-1/2	L-112-24	
		1-3/4	L-112-28	
		2-1/8	L-112-34	
		2-1/2	L-112-40	
		3	L-112-48	
1-3/4	2-1/4 2.2525-2.2521 (2.270-2.265 UNG)	3/4	L-144-12	
		1	L-144-16	
		1-3/8	L-144-22	
		1-1/2	L-144-24	
		1-3/4	L-144-28	
		2-1/8	L-144-34	
		2-1/2	L-144-40	
		3	L-144-48	
2-1/4	2-3/4 2.7526-2.7522 (2.770-2.765 UNG)	3/4	L-176-12	
		1	L-176-16	
		1-3/8	L-176-22	
		1-1/2	L-176-24	
		1-3/4	L-176-28	
		2-1/8	L-176-34	
		2-1/2	L-176-40	
		3	L-176-48	

For extended-range bushings (larger sizes) please see our web catalog.

QUANTITY DISCOUNTS

Quantity	1 -5	6 -11	12 -23	24 -49	50 -99	100 -199	200 -499	500 Up
Discount %	Net	18%	29%	34%	42%	48%	50%	52%
Multiplier	1.00	.82	.71	.66	.58	.52	.50	.48

Alignment Pins

Offer Strength and Precision

Our wide variety of precision alignment pins includes ball-lock pins, detent pins, expanding pins and lifting pins. Choose just the right pin for every job. Send for a free catalog, or view our web site, www.carrlane.com. We also have a wide assortment of tooling components, clamps, modular fixturing and much more.

L Pin

Shoulder Pin

T Pin

Clamping Pin

Jig Pin

Ball Lock Pin

Marine Pin

Lifting Pin

Locating Pin

Detent Pin

Locking Pin

Expanding Pin

CarrLane® MANUFACTURING CO.
4200 Carr Lane Ct., P.O. Box 191970
St. Louis, Missouri 63119-7970 USA
Phone: 314-647-6200, FAX: 314-647-5736
Web Site: www.carrlane.com

PM LINER METRIC

ID (G6)	OD (s6)	LENGTH	ANSI PART NO.	PRICE 1-5
8mm	12mm 12.039-12.028mm	10mm	PM-12-10-8.00	Please see our web catalog for pricing.
		16mm	PM-12-16-8.00	
10mm	15mm 15.039-15.028mm	12mm	PM-15-12-10.00	
		20mm	PM-15-20-10.00	
		25mm	PM-15-25-10.00	
12mm	18mm 18.039-18.028mm	12mm	PM-18-12-12.00	
		20mm	PM-18-20-12.00	
		25mm	PM-18-25-12.00	
15mm	22mm 22.048-22.035mm	16mm	PM-22-16-15.00	
		28mm	PM-22-28-15.00	
		36mm	PM-22-36-15.00	
18mm	26mm 26.048-26.035mm	16mm	PM-26-16-18.00	
		28mm	PM-26-28-18.00	
		36mm	PM-26-36-18.00	
22mm	30mm 30.048-30.035mm	20mm	PM-30-20-22.00	
		36mm	PM-30-36-22.00	
		45mm	PM-30-45-22.00	
26mm	35mm 35.059-35.043mm	20mm	PM-35-20-26.00	
		36mm	PM-35-36-26.00	
		45mm	PM-35-45-26.00	
30mm	42mm 42.059-42.043mm	25mm	PM-42-25-30.00	
		45mm	PM-42-45-30.00	
		56mm	PM-42-56-30.00	
35mm	48mm 48.059-48.043mm	25mm	PM-48-25-35.00	
		45mm	PM-48-45-35.00	
		56mm	PM-48-56-35.00	
42mm	55mm 55.072-55.053mm	30mm	PM-55-30-42.00	
		56mm	PM-55-56-42.00	
		67mm	PM-55-67-42.00	
48mm	62mm 62.072-62.053mm	30mm	PM-62-30-48.00	
		56mm	PM-62-56-48.00	
		67mm	PM-62-67-48.00	
55mm	70mm 70.078-70.059mm	30mm	PM-70-30-55.00	
		56mm	PM-70-56-55.00	
		67mm	PM-70-67-55.00	
62mm	78mm 78.078-78.059mm	35mm	PM-78-35-62.00	
		67mm	PM-78-67-62.00	
		78mm	PM-78-78-62.00	

ID (G6)	OD (s6)	LENGTH	ANSI PART NO.	PRICE 1-5
70mm	85mm 85.093-85.071mm	35mm	PM-85-35-70.00	Please see our web catalog for pricing.
		67mm	PM-85-67-70.00	
		78mm	PM-85-78-70.00	
78mm	95mm 95.093-95.071mm	40mm	PM-95-40-78.00	
		78mm	PM-95-78-78.00	
		105mm	PM-95-105-78.00	
85mm	105mm 105.101-105.079mm	40mm	PM-105-40-85.00	
		78mm	PM-105-78-85.00	
		105mm	PM-105-105-85.00	
95mm	115mm 115.101-115.079mm	45mm	PM-115-45-95.00	
		89mm	PM-115-89-95.00	
		112mm	PM-115-112-95.00	
105mm	125mm 125.117-125.092mm	45mm	PM-125-45-105.00	
		89mm	PM-125-89-105.00	
		112mm	PM-125-112-105.00	

Note: Metric liner bushings are the same as metric press-fit bushings.

QUANTITY DISCOUNTS

Quantity	1 -5	6 -11	12 -23	24 -49	50 -99	100 -199	200 -499	500 Up
Discount %	Net	18%	29%	34%	42%	48%	50%	52%
Multiplier	1.00	.82	.71	.66	.58	.52	.50	.48

Be the job

Great or small

Do it right

Or not at all.

Carr Lane MANUFACTURING CO.
4200 Carr Lane Ct., P.O. Box 191970
St. Louis, Missouri 63119-7970 USA
Phone: 314-647-6200, FAX: 314-647-5736
Web Site: www.carrlane.com

(7/01)

HEAD LINER

HL

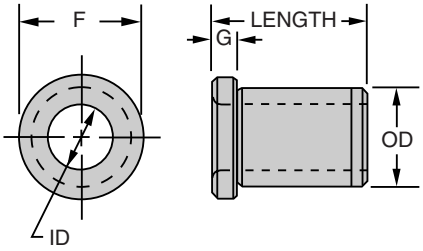

USA

BODY OD	F DIA	G
1/2	5/8	3/32
3/4	7/8	3/32
1	1-1/8	1/8
1-3/8	1-1/2	1/8
1-3/4	1-7/8	3/16
2-1/4	2-3/8	3/16
2-3/4	2-7/8	3/16

For dimensions of larger USA sizes, see page 37 (Extended Range).

METRIC

BODY OD	F DIA	G
12mm	15mm	3mm
15mm	18mm	3mm
18mm	22mm	4mm
22mm	26mm	4mm
26mm	30mm	4mm
30mm	34mm	5mm
35mm	39mm	5mm
42mm	46mm	5mm
48mm	52mm	5mm
55mm	59mm	5mm
62mm	66mm	6mm
70mm	74mm	6mm
78mm	82mm	6mm
85mm	90mm	6mm
95mm	100mm	6mm
105mm	110mm	6mm
115mm	120mm	6mm
125mm	130mm	6mm

APPLICATIONS:

Similar to an L bushing, but with a head to resist heavy axial loads. Head liners are permanent bushings used to hold renewable drill bushings. The head liner's ID has a precise sliding fit with the renewable bushing's OD. The hardened head liner accurately locates the renewable bushing and protects the jig plate from wear caused by frequent bushing replacement. Note: The "length" listed for a head liner refers to its overall length, not its length under the head. Metric head-liner bushings are the same as metric head-press-fit bushings.

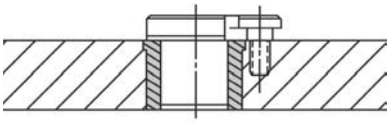

ORDERING EXAMPLES:

HL-32-16	Standard USA liner bushing
HL-32-16U	Unground OD
HM-18-25-12.00	Standard metric liner bushing (same as metric press-fit type)

Prices shown here apply to standard bushings only, either ground or unground OD, for a standard ID size.

STANDARD LINER ID TOLERANCES:

5/16"	+.0001/+.0004	8 to 10mm	+.005/+.014mm
1/2"	+.0002/+.0005	12 to 18mm	+.006/+.017mm
3/4"	+.0003/+.0006	22 to 30mm	+.007/+.020mm
1"	+.0004/+.0007	35 to 48mm	+.009/+.025mm
1-3/8"	+.0006/+.0010	55 to 78mm	+.010/+.029mm
1-3/4"	+.0008/+.0012	85 to 105mm	+.012/+.034mm
2-1/4"	+.0010/+.0015	(G6 tolerance)	

ID	OD	LENGTH	ANSI PART NO.	PRICE 1-5
5/16	1/2 .5017-.5014 (.520-.515 UNG)	5/16	HL-32-5	Please see our web catalog for pricing.
		3/8	HL-32-6	
		1/2	HL-32-8	
		3/4	HL-32-12	
		1	HL-32-16	
		1-3/8	HL-32-22	
1/2	3/4 .7518-.7515 (.770-.765 UNG)	5/16	HL-48-5	
		3/8	HL-48-6	
		1/2	HL-48-8	
		3/4	HL-48-12	
		1	HL-48-16	
		1-3/8	HL-48-22	
		1-1/2	HL-48-24	
		1-3/4	HL-48-28	
		2-1/8	HL-48-34	
3/4	1 1.0018-1.0015 (1.020-1.015 UNG)	1/2	HL-64-8	
		3/4	HL-64-12	
		1	HL-64-16	
		1-3/8	HL-64-22	
		1-1/2	HL-64-24	
		1-3/4	HL-64-28	
		2-1/8	HL-64-34	
		2-1/2	HL-64-40	
		3	HL-64-48	
1	1-3/8 1.3772-1.3768 (1.395-1.390 UNG)	1/2	HL-88-8	
		3/4	HL-88-12	
		1	HL-88-16	
		1-3/8	HL-88-22	
		1-1/2	HL-88-24	
		1-3/4	HL-88-28	
		2-1/8	HL-88-34	
		2-1/2	HL-88-40	
		3	HL-88-48	
1-3/8	1-3/4 1.7523-1.7519 (1.770-1.765 UNG)	3/4	HL-112-12	
		1	HL-112-16	
		1-3/8	HL-112-22	
		1-1/2	HL-112-24	
		1-3/4	HL-112-28	
		2-1/8	HL-112-34	
		2-1/2	HL-112-40	
		3	HL-112-48	
1-3/4	2-1/4 2.2525-2.2521 (2.270-2.265 UNG)	3/4	HL-144-12	
		1	HL-144-16	
		1-3/8	HL-144-22	
		1-1/2	HL-144-24	
		1-3/4	HL-144-28	
		2-1/8	HL-144-34	
		2-1/2	HL-144-40	
		3	HL-144-48	
2-1/4	2-3/4 2.7526-2.7522 (2.770-2.765 UNG)	3/4	HL-176-12	
		1	HL-176-16	
		1-3/8	HL-176-22	
		1-1/2	HL-176-24	
		1-3/4	HL-176-28	
		2-1/8	HL-176-34	
		2-1/2	HL-176-40	
		3	HL-176-48	

QUANTITY DISCOUNTS

Quantity	1 -5	6 -11	12 -23	24 -49	50 -99	100 -199	200 -499	500 Up
Discount %	Net	18%	29%	34%	42%	48%	50%	52%
Multiplier	1.00	.82	.71	.66	.58	.52	.50	.48

Carr Lane MANUFACTURING CO.
4200 Carr Lane Ct., P.O. Box 191970
St. Louis, Missouri 63119-7970 USA
Phone: 314-647-6200, FAX: 314-647-5736
Web Site: www.carrlane.com

HM

HEAD LINER METRIC

ID (G6)	OD (s6)	LENGTH	ANSI PART NO.	PRICE 1-5
8mm	12mm 12.039-12.028mm	10mm	HM-12-10-8.00	Please see our web catalog for pricing.
		16mm	HM-12-16-8.00	
10mm	15mm 15.039-15.028mm	12mm	HM-15-12-10.00	
		20mm	HM-15-20-10.00	
		25mm	HM-15-25-10.00	
12mm	18mm 18.039-18.028mm	12mm	HM-18-12-12.00	
		20mm	HM-18-20-12.00	
		25mm	HM-18-25-12.00	
15mm	22mm 22.048-22.035mm	16mm	HM-22-16-15.00	
		28mm	HM-22-28-15.00	
		36mm	HM-22-36-15.00	
18mm	26mm 26.048-26.035mm	16mm	HM-26-16-18.00	
		28mm	HM-26-28-18.00	
		36mm	HM-26-36-18.00	
22mm	30mm 30.048-30.035mm	20mm	HM-30-20-22.00	
		36mm	HM-30-36-22.00	
		45mm	HM-30-45-22.00	
26mm	35mm 35.059-35.043mm	20mm	HM-35-20-26.00	
		36mm	HM-35-36-26.00	
		45mm	HM-35-45-26.00	
30mm	42mm 42.059-42.043mm	25mm	HM-42-25-30.00	
		45mm	HM-42-45-30.00	
		56mm	HM-42-56-30.00	
35mm	48mm 48.059-48.043mm	25mm	HM-48-25-35.00	
		45mm	HM-48-45-35.00	
		56mm	HM-48-56-35.00	
42mm	55mm 55.072-55.053mm	30mm	HM-55-30-42.00	
		56mm	HM-55-56-42.00	
		67mm	HM-55-67-42.00	
48mm	62mm 62.072-62.053mm	30mm	HM-62-30-48.00	
		56mm	HM-62-56-48.00	
		67mm	HM-62-67-48.00	
55mm	70mm 70.078-70.059mm	30mm	HM-70-30-55.00	
		56mm	HM-70-56-55.00	
		67mm	HM-70-67-55.00	
62mm	78mm 78.078-78.059mm	35mm	HM-78-35-62.00	
		67mm	HM-78-67-62.00	
		78mm	HM-78-78-62.00	

ID (G6)	OD (s6)	LENGTH	ANSI PART NO.	PRICE 1-5
70mm	85mm 85.093-85.071mm	35mm	HM-85-35-70.00	Please see our web catalog for pricing.
		67mm	HM-85-67-70.00	
		78mm	HM-85-78-70.00	
78mm	95mm 95.093-95.071mm	40mm	HM-95-40-78.00	
		78mm	HM-95-78-78.00	
		105mm	HM-95-105-78.00	
85mm	105mm 105.101-105.079mm	40mm	HM-105-40-85.00	
		78mm	HM-105-78-85.00	
		105mm	HM-105-105-85.00	
95mm	115mm 115.101-115.079mm	45mm	HM-115-45-95.00	
		89mm	HM-115-89-95.00	
		112mm	HM-115-112-95.00	
105mm	125mm 125.117-125.092mm	45mm	HM-125-45-105.00	
		89mm	HM-125-89-105.00	
		112mm	HM-125-112-105.00	

Note: Metric head-liner bushings are the same as metric head-press-fit bushings.

It is not a tragedy to have only one talent; the tragedy is in not using it.

QUANTITY DISCOUNTS

Quantity	1 -5	6 -11	12 -23	24 -49	50 -99	100 -199	200 -499	500 Up
Discount %	Net	18%	29%	34%	42%	48%	50%	52%
Multiplier	1.00	.82	.71	.66	.58	.52	.50	.48

Carr Lane MANUFACTURING CO.
4200 Carr Lane Ct., P.O. Box 191970
St. Louis, Missouri 63119-7970 USA
Phone: 314-647-6200, FAX: 314-647-5736
Web Site: www.carrlane.com

(7/01)

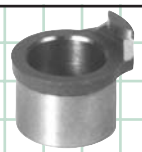

UN-A-LOK® LINER UL

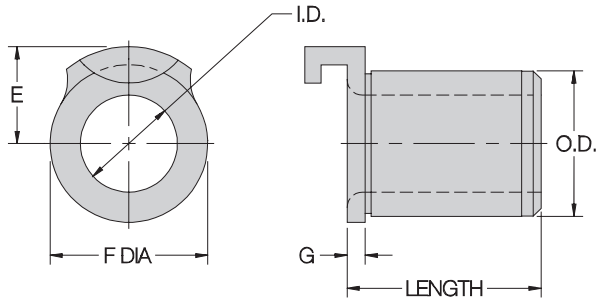

USA

BODY OD	E	F DIA	G
5/16	1/4	.365	3/32
1/2	3/8	9/16	3/32
3/4	1/2	13/16	3/32
1	21/32	1-1/16	1/8
1-3/8	7/8	1-7/16	1/8

METRIC

BODY OD	E	F DIA	G
12mm	9.5mm	15mm	3mm
15mm	11mm	18mm	3mm
18mm	13mm	22mm	4mm
22mm	15.5mm	26mm	4mm
26mm	17.5mm	30mm	4mm

APPLICATIONS:

Similar to an HL head liner, but incorporating a special locking tab that eliminates the need for a lockscrew. Un-A-Lok® liners are permanent bushings used to hold SF renewable drill bushings (on the "slip" side only, not the "fixed" side). Although slightly more expensive than a head liner plus a lockscrew, installation time is dramatically reduced. Patent no. 3,015,242 and 3,099,079.

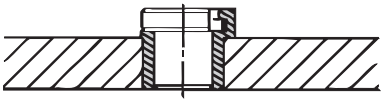

ORDERING EXAMPLES:

UL-20-5	Standard USA liner bushing
UL-20-5U	Unground OD
ULM-12-10	Standard metric liner bushing

STANDARD LINER ID TOLERANCES:

3/16 to 5/16"	+.0001/+.0004	8 to 10mm	+.005/+.014mm
1/2"	+.0002/+.0005	12 to 18mm	+.006/+.017mm
3/4"	+.0003/+.0006	(G6 tolerance)	
1"	+.0004/+.0007		

USA

ID	OD	LENGTH	PART NO.	PRICE 1-5
3/16	**5/16** .3141-.3138 (.327-.322 UNG)	5/16	UL-20-5	Please see our web catalog for pricing.
		3/8	UL-20-6	
		1/2	UL-20-8	
		3/4	UL-20-12	
5/16	**1/2** .5017-.5014 (.520-.515 UNG)	3/8	UL-32-6	
		1/2	UL-32-8	
		3/4	UL-32-12	
1/2	**3/4** .7518-.7515 (.770-.765 UNG)	1/2	UL-48-8	
		3/4	UL-48-12	
		1	UL-48-16	
3/4	**1** 1.0018-1.0015 (1.020-1.015 UNG)	1/2	UL-64-8	
		3/4	UL-64-12	
		1	UL-64-16	
1	**1-3/8** 1.3772-1.3768 (1.395-1.390 UNG)	1/2	UL-88-8	
		3/4	UL-88-12	
		1	UL-88-16	
		1-3/8	UL-88-22	

METRIC

ID (G6)	OD (s6)	LENGTH	PART NO.	PRICE 1-5
8mm	**12mm** 12.039-12.028mm	10mm	ULM-12-10-8.00	Contact Factory
		16mm	ULM-12-16-8.00	
10mm	**15mm** 15.039-15.028mm	12mm	ULM-15-12-10.00	Contact Factory
		20mm	ULM-15-20-10.00	
		25mm	ULM-15-25-10.00	
12mm	**18mm** 18.039-18.028mm	12mm	ULM-18-12-12.00	Contact Factory
		20mm	ULM-18-20-12.00	
		25mm	ULM-18-25-12.00	
15mm	**22mm** 22.048-22.035mm	16mm	ULM-22-16-15.00	Contact Factory
		28mm	ULM-22-28-15.00	
		36mm	ULM-22-36-15.00	
18mm	**26mm** 26.048-26.035mm	16mm	ULM-26-16-18.00	Contact Factory
		28mm	ULM-26-28-18.00	
		36mm	ULM-26-36-18.00	

QUANTITY DISCOUNTS

Quantity	1 -5	6 -11	12 -23	24 -49	50 -99	100 -199	200 -499	500 Up
Discount %	Net	18%	29%	34%	42%	48%	50%	52%
Multiplier	1.00	.82	.71	.66	.58	.52	.50	.48

UN-A-LOK® INSTALLATION TOOL

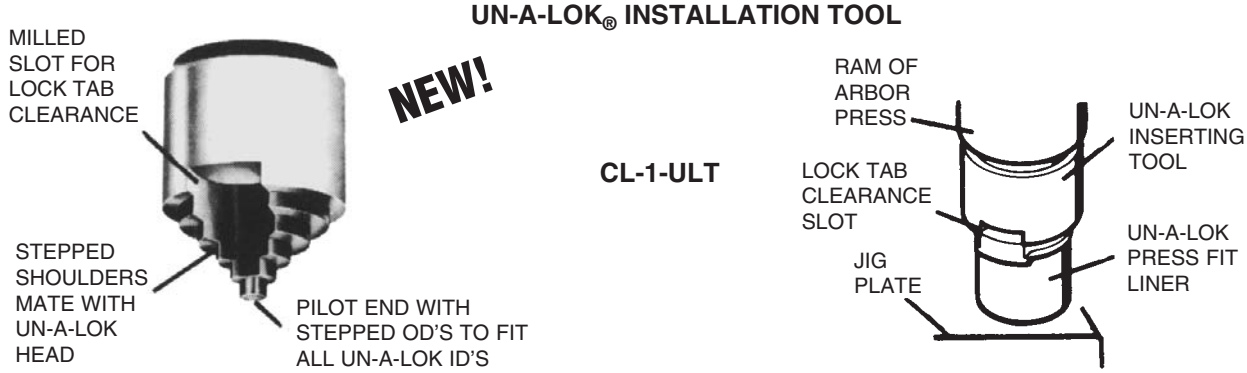

Carr Lane MANUFACTURING CO.
4200 Carr Lane Ct., P.O. Box 191970
St. Louis, Missouri 63119-7970 USA
Phone: 314-647-6200, FAX: 314-647-5736
Web Site: www.carrlane.com

LOCKSCREWS AND CLAMPS

LOCKSCREWS

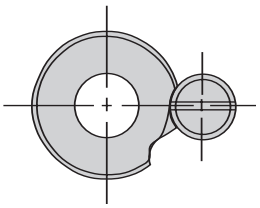

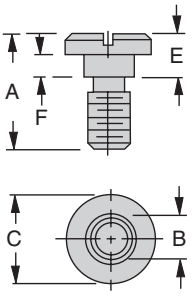

* For extended-range bushings.

The most popular locking device for renewable drill bushings. Use on either the "slip" or "fixed" side of a slip-fixed bushing. Simple, strong, compact, and economical.

STANDARD MOUNTING (USA)

PART NO.	A	B DIA	C DIA	E	F	THREAD	PRICE (NET)
LS-0	7/16	3/16	5/16	3/16	.105/.100	#8-32	Please see web catalog for pricing
LS-1	5/8	3/8	5/8	1/4	.138/.132	5/16-18	
LS-2	7/8			3/8	.200/.194		
LS-3	1	7/16	3/4	3/8	.200/.194	3/8-16	
LS-4*	1-1/16			7/16	.231/.225		
LS-5*	1-1/8			1/2	.263/.257		

STANDARD MOUNTING — THINWALL (USA)

TW-1	7/16	3/16	5/16	3/16	.105/.100	#8-32	Please see web catalog for pricing
TW-2	1/2	1/4	3/8	1/4	.138/.132	#10-32	
TW-3	11/16		7/16	3/8	.200/.194		
TW-4	7/8	3/8	9/16	1/2	.263/.257	5/16-18	
TW-5	1	3/8	5/8	5/8	.325/.319		
TW-7	3/4			3/8	.200/.194		

STANDARD MOUNTING (METRIC)

LSM-1	15mm	7.5mm	13mm	6mm	3.3mm	M5	Please see web catalog
LSM-3	18mm	9.5mm	16mm	8mm	4.3mm	M6	
LSM-5	22mm	12mm	20mm	10mm	5.8mm	M8	
LSM-7	32mm	15mm	24mm	12mm	7.3mm	M10	

PROJECTED MOUNTING (METRIC)

LSM-2	18mm	7.5mm	13mm	9mm	6.3mm	M5	Please see web catalog
LSM-4	22mm	9.5mm	16mm	12mm	8.3mm	M6	
LSM-6	27mm	12mm	20mm	15mm	10.8mm	M8	
LSM-8	38mm	15mm	24mm	18mm	13.3mm	M10	

ROUND CLAMPS

Alternative to lockscrews when using the "fixed" side of a slip-fixed SF bushing. Round clamps have less clearance under their heads, to clamp bushings tighter (which is why you cannot use them on the bushing's "slip" side). Use them with a socket-head cap screw.

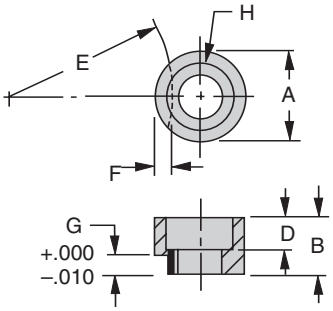

* For extended-range bushings.

STANDARD MOUNTING (USA)

PART NO.	A DIA	B	D	E	F	G	H SOCKET-HEAD CAP SCREW	REPLACES LOCK SCREW	PRICE (NET)
RC-01	5/8	5/16	5/32	17/32	.109	.125	5/16-18	LS-1	Please see web catalog for pricing
RC-02		7/16	7/32	29/32	.125	.188		LS-2	
RC-03	3/4	1/2	9/32	1-13/32	.156	.188	3/8-16	LS-3	
RC-04*		17/32	1/4	2-1/2		.219		LS-4	
RC-05*		9/16				.250		LS-5	

STANDARD MOUNTING (METRIC)

RCM-1	13mm	8mm	4mm	9.5mm	2.8mm	3mm	M5	LSM-1	Please see web catalog
RCM-3	16mm	10mm	5mm	15mm	3.3mm	4mm	M6	LSM-3	
RCM-5	20mm	12mm	5mm	30mm	3.8mm	5.5mm	M8	LSM-5	
RCM-7	24mm	16mm	7mm	80mm	4.5mm	7mm	M10	LSM-7	

PROJECTED MOUNTING (METRIC)

RCM-2	13mm	11mm	4mm	9.5mm	2.8mm	6mm	M5	LSM-2	Please see web catalog
RCM-4	16mm	14mm	5mm	15mm	3.3mm	8mm	M6	LSM-4	
RCM-6	20mm	17mm	5mm	30mm	3.8mm	10.5mm	M8	LSM-6	
RCM-8	24mm	22mm	7mm	80mm	4.5mm	13mm	M10	LSM-8	

LOCKSCREW LOCATING JIG

CL-1-LSLJ

A precision tool for centerpunching lockscrew holes. The jig is made in two parts: a reversible centerpunch and an outer body for locating. To use, just insert the bushing and place the locating jig against the lockscrew recess. Turn bushing to desired orientation, then tap centerpunch lightly. For installing lockscrews LS-1, LS-2, LS-3, LS-4, LS-5, TW-5, and TW-7. Also for installing round clamps RC-01, RC-02, RC-03, RC-04, and RC-05.

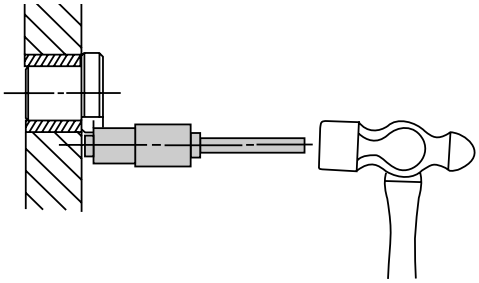

Carr Lane MANUFACTURING CO.
4200 Carr Lane Ct., P.O. Box 191970
St. Louis, Missouri 63119-7970 USA
Phone: 314-647-6200, FAX: 314-647-5736
Web Site: www.carrlane.com

LOCKSCREWS AND CLAMPS

ROUND END CLAMPS

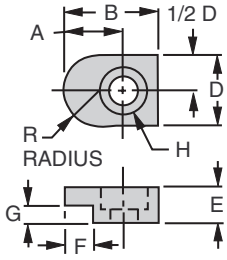

A heavy-duty alternative to lockscrews. Allows locating tapped hole farther away from bushing to avoid interference with a larger liner. Use on either the “slip” or “fixed” side of a slip-fixed renewable bushing. Available in two heights: standard for recessed liner mounting; tall for projected head-liner mounting. Use with a socket-head cap screw.

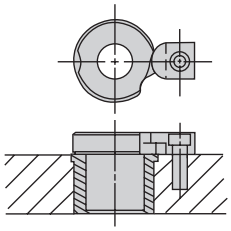

Standard Mounting

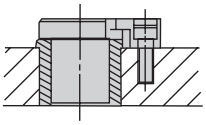

Projected Mounting

STANDARD MOUNTING (USA)

PART NO.	A	B	D	E	F	G	H SOCKET-HEAD CAP SCREW	R	PRICE (NET)
RK-01	7/16	3/4	5/8	5/16	3/16	1/8	1/4-20	5/16	See our website for pricing.
RK-02	1/2			3/8	1/4	3/16			
RK-03	5/8	1	3/4	3/8	5/16	3/16	5/16-18	3/8	
RK-04*	11/16	1-1/8	3/4	7/16	5/16	7/32	3/8-16	3/8	
RK-05*				1/2		1/4			

PROJECTED MOUNTING (USA)

PART NO.	A	B	D	E	F	G	H SOCKET-HEAD CAP SCREW	R	PRICE (NET)
RK-10	7/16	3/4	5/8	3/8	3/16	7/32	1/4-20	5/16	See our web catalog for pricing.
RK-11						1/4			
RK-12	1/2			1/2	1/4	5/16			
RK-13						3/8			
RK-14	5/8	1	3/4	1/2	5/16	3/8	3/8-16	3/8	
RK-15*	11/16	1-1/8		5/8		13/32			
RK-16*						7/16			
RK-17*				3/4		15/32			

* For extended-range bushings.

FLAT CLAMPS

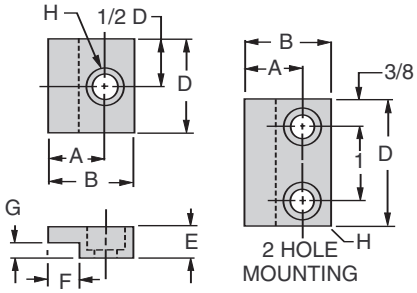

Use to lock FM-type fixed-renewable bushings which have a milled locking flat. Available in two heights: standard for recessed liner mounting; tall for projected head-liner mounting. Use with one or two socket-head cap screws.

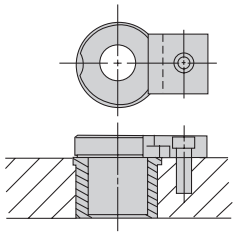

Standard Mounting

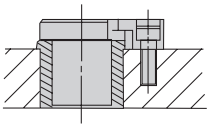

Projected Mounting

STANDARD MOUNTING (USA)

PART NO.	NO. OF HOLES	A	B	D	E	F	G	H SOCKET-HEAD CAP SCREW	PRICE (NET)
FC-01	1	1/2	7/8	5/8	5/16	3/16	1/8	1/4-20	See our web catalog for pricing.
FC-02		5/8	1	1	3/8	1/4	3/16	5/16-18	
FC-03			1-1/8			5/16			
FC-04*	1	51/64	1-11/64	1-1/4	3/8	27/64	7/32	3/8-16	
FC-05*	2			1-3/4					
FC-06*	1			1-1/4	1/2		1/4		
FC-07*	2			1-3/4					

PROJECTED MOUNTING (USA)

PART NO.	NO. OF HOLES	A	B	D	E	F	G	H SOCKET-HEAD CAP SCREW	PRICE (NET)
FC-10	1	1/2	7/8	5/8	3/8	3/16	7/32	1/4-20	See our web catalog for pricing.
FC-11							1/4		
FC-12	1	5/8	1	1	1/2	1/4	5/16	5/16-18	
FC-13							3/8		
FC-14	1	5/8	1-1/8	1-1/4	1/2	5/16	3/8	3/8-16	
FC-15	2			1-3/4					
FC-16*	1	51/64	1-11/64	1-1/4	5/8	27/64	13/32		
FC-17*	2			1-3/4					
FC-18*	1			1-1/4			7/16		
FC-19*	2			1-3/4					
FC-20*	1			1-1/4	3/4		15/32		
FC-21*	2			1-3/4					

* For extended-range bushings.

Carr Lane MANUFACTURING CO.
4200 Carr Lane Ct., P.O. Box 191970
St. Louis, Missouri 63119-7970 USA
Phone: 314-647-6200, FAX: 314-647-5736
Web Site: www.carrlane.com

CH CHIP BREAKER

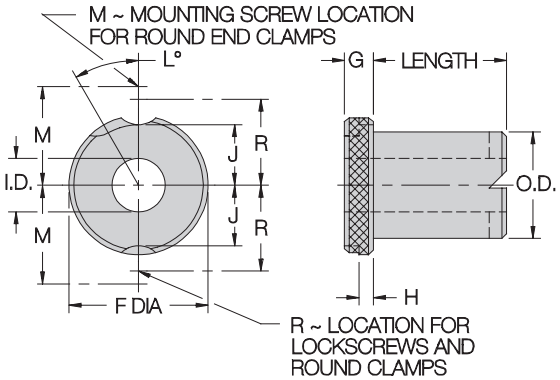

USA

BODY OD	F	G	H	J	L	M	R	LOCK SCREW
5/16	35/64	1/4	1/8	11/64	65°	5/8	1/2	LS-1
1/2	51/64			19/64	65°	3/4	5/8	
3/4	1-3/64			27/64	50°	7/8	3/4	
1	1-27/64	3/8	3/16	19/32	35°	1-7/64	59/64	LS-2
1-3/8	1-51/64			25/32	30°	1-19/64	1-7/64	
1-3/4	2-19/64	3/8	3/16	1	30°	1-41/64	1-25/64	LS-3
2-1/4	2-51/64			1-1/4	25°	1-57/64	1-41/64	

METRIC

BODY OD	F	G	H	J	L	M	R	LOCK SCREW
8mm	15mm	6mm	3mm	4.5mm	65°		11.5mm	LSM-1
10mm	18mm			6mm	65°		13mm	LSM-2
12mm	22mm	8mm	4mm	7.5mm	60°		16mm	LSM-3
15mm	26mm			9.5mm	50°		18mm	LSM-4
18mm	30mm			11.5mm	50°		20mm	
22mm	34mm	10mm	5.5mm	13mm	35°		23.5mm	LSM-5
26mm	39mm			15.5mm	35°		26mm	LSM-6
30mm	46mm			19mm	30°		29.5mm	
35mm	52mm			22mm	30°		32.5mm	
42mm	59mm			25.5mm	30°		36mm	
48mm	66mm	12mm	7mm	28.5mm	30°		41mm	LSM-7
55mm	74mm			32.5mm	25°		45mm	LSM-8
62mm	82mm			36.5mm	25°		49mm	

APPLICATIONS:

Similar to an SF renewable bushing, but with specially designed chip-breaking notches on the drill-exit end. Use to break up chips from tough stringy materials, to reduce friction and heat buildup. Reduces bushing wear at the drill-exit end and reduces the chance of tool or workpiece damage. A chip-breaker bushing should extend beyond its liner to allow chips to escape. Chip breakers are also available on other bushing types such as P, H, and DC (directed coolant).

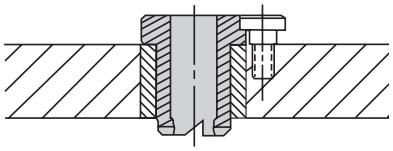

ORDERING EXAMPLES:

CH-20-16-.1250	Standard USA SF-type bushing with chip breaker, inch ID
CH-20-16-.1772	Standard USA SF-type bushing with chip breaker, mm ID (.1772 = 4.50mm)
CH-20-16-.1250 NCB	No counterbore on long bushings marked with * (no counterbore is standard on all other bushings)
CHM-10-20-4.50	Standard metric SF-type bushing with chip breaker
PCH-20-16-.1250	P bushing with chip breaker
HCH-20-16-.1250	H bushing with chip breaker
DCCH-20-16-.1250	Directed coolant bushing with chip breaker

STANDARD ID TOLERANCES:

From #80 to 1/4"	+.0001/+.0004	From .35 to 3mm	+.002/+.008mm
		Over 3 to 6mm	+.004/+.012mm
Over 1/4 to 3/4"	+.0001/+.0005	Over 6 to 10mm	+.005/+.014mm
		Over 10 to 18mm	+.006/+.017mm
Over 3/4 to 1-1/2"	+.0002/+.0006	Over 18 to 30mm	+.007/+.020mm
		Over 30 to 50mm	+.009/+.025mm
Over 1-1/2 to 2-3/4"	+.0003/+.0007	(G6 tolerance)	

ID RANGE	OD	LENGTH	ANSI PART NO.	PRICE 1-5	LOCK SCREW
.0625-.0934 1/16-#43 1.60-2.35mm	**5/16** .3125-.3123	*3/4	CH-20-12	Contact Factory	LS-1 RC-01 RK-01 RK-10
		*1	CH-20-16		
		*1-3/8	CH-20-22		
.0935-.1935 #42-#10 2.40-4.90mm		*3/4	CH-20-12	Contact Factory	LS-1 RC-01 RK-01 RK-10
		*1	CH-20-16		
		*1-3/8	CH-20-22		
.1405-.3438 #28-11/32 3.60-8.70mm	**1/2** .5000-.4998	*3/4	CH-32-12	Contact Factory	LS-1 RC-01 RK-01 RK-10
		*1	CH-32-16		
		*1-3/8	CH-32-22		
		*1-3/4	CH-32-28		
		*2-1/8	CH-32-34		
.2812-.5625 9/32-9/16 7.20-14.00mm	**3/4** .7500-.7498	1	CH-48-16	Contact Factory	LS-1 RC-01 RK-01 RK-11
		1-3/8	CH-48-22		
		1-3/4	CH-48-28		
		2-1/8	CH-48-34		
		*2-1/2	CH-48-40		
.4688-.7812 15/32-25/32 11.50-19.50mm	**1** 1.0000-.9998	1	CH-64-16	Contact Factory	LS-2 RC-02 RK-02 RK-12
		1-3/8	CH-64-22		
		1-3/4	CH-64-28		
		2-1/8	CH-64-34		
		2-1/2	CH-64-40		
		3	CH-64-48		
.7188-1.0625 23/32–1-1/16 18.50-27.00mm	**1-3/8** 1.3750-1.3747	1	CH-88-16	Contact Factory	LS-2 RC-02 RK-02 RK-12
		1-3/8	CH-88-22		
		1-3/4	CH-88-28		
		2-1/8	CH-88-34		
		2-1/2	CH-88-40		
		3	CH-88-48		
.9688-1.4062 31/32–1-13/32 25.00-35.00mm	**1-3/4** 1.7500-1.7497	1-3/8	CH-112-22	Contact Factory	LS-3 RC-03 RK-03 RK-13
		1-3/4	CH-112-28		
		2-1/8	CH-112-34		
		2-1/2	CH-112-40		
		3	CH-112-48		
1.3438-1.8750 1-11/32–1-7/8 35.00-47.00mm	**2-1/4** 2.2500-2.2496	1-3/8	CH-144-22	Contact Factory	LS-3 RC-03 RK-03 RK-13
		1-3/4	CH-144-28		
		2-1/8	CH-144-34		
		2-1/2	CH-144-40		
		3	CH-144-48		

* Counterbored, leaving correct drill-bearing length and chip clearance (see page 6 for bearing length).

Carr Lane MANUFACTURING CO.
4200 Carr Lane Ct., P.O. Box 191970
St. Louis, Missouri 63119-7970 USA
Phone: 314-647-6200, FAX: 314-647-5736
Web Site: www.carrlane.com

CHIP BREAKER METRIC

CHM

ID RANGE (G6)	OD (h5)	LENGTH	ANSI PART NO.	PRICE	LOCK SCREW
1.00-4.00mm	8mm 8.000-7.994mm	*10mm	CHM-8-10	Contact Factory	LSM-1 LSM-2 RCM-1 RCM-2
		*16mm	CHM-8-16		
4.01-6.00mm	10mm 10.000-9.994mm	12mm	CHM-10-12	Contact Factory	
		20mm	CHM-10-20		
		25mm	CHM-10-25		
6.01-8.00mm	12mm 12.000-11.992mm	12mm	CHM-12-12	Contact Factory	LSM-3 LSM-4 RCM-3 RCM-4
		20mm	CHM-12-20		
		25mm	CHM-12-25		
8.01-10.00mm	15mm 15.000-14.992mm	16mm	CHM-15-16	Contact Factory	
		28mm	CHM-15-28		
		36mm	CHM-15-36		
10.01-12.00mm	18mm 18.000-17.992mm	16mm	CHM-18-16	Contact Factory	
		28mm	CHM-18-28		
		36mm	CHM-18-36		
12.01-15.00mm	22mm 22.000-21.991mm	20mm	CHM-22-20	Contact Factory	LSM-5 LSM-6 RCM-5 RCM-6
		36mm	CHM-22-36		
		45mm	CHM-22-45		
15.01-18.00mm	26mm 26.000-25.991mm	20mm	CHM-26-20	Contact Factory	
		36mm	CHM-26-36		
		45mm	CHM-26-45		
18.01-22.00mm	30mm 30.000-29.991mm	25mm	CHM-30-25	Contact Factory	
		45mm	CHM-30-45		
		56mm	CHM-30-56		
22.01-26.00mm	35mm 35.000-34.989mm	25mm	CHM-35-25	Contact Factory	
		45mm	CHM-35-45		
		56mm	CHM-35-56		
26.01-30.00mm	42mm 42.000-41.989mm	30mm	CHM-42-30	Contact Factory	
		56mm	CHM-42-56		
		67mm	CHM-42-67		
30.01-35.00mm	48mm 48.000-47.989mm	30mm	CHM-48-30	Contact Factory	LSM-7 LSM-8 RCM-7 RCM-8
		56mm	CHM-48-56		
		67mm	CHM-48-67		
35.01-42.00mm	55mm 55.000-54.987mm	30mm	CHM-55-30	Contact Factory	
		56mm	CHM-55-56		
		67mm	CHM-55-67		
42.01-48.00mm	62mm 62.000-61.987mm	35mm	CHM-62-35	Contact Factory	
		67mm	CHM-62-67		
		78mm	CHM-62-78		

* Small metric drill sizes through .80mm are counterbored 1.00mm diameter, with 3mm drill-bearing length.

Why settle for the rest when you can have the best?

We've done well, now let's excel.

Carr Lane® MANUFACTURING CO.
4200 Carr Lane Ct., P.O. Box 191970
St. Louis, Missouri 63119-7970 USA
Phone: 314-647-6200, FAX: 314-647-5736
Web Site: www.carrlane.com

DC DIRECTED COOLANT

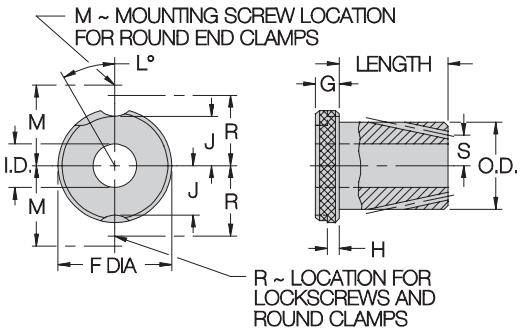

BODY OD	F DIA	G	H	J	L	M	N DIA
5/16	35/64	1/4	1/8	11/64	65°	5/8	5/8
1/2	51/64			19/64	65°	3/4	7/8
3/4	1-3/64			27/64	50°	7/8	1-1/8
1	1-27/64	3/8	3/16	19/32	35°	1-7/64	1-1/2
1-3/8	1-51/64			25/32	30°	1-19/64	1-7/8
1-3/4	2-19/64			1	30°	1-41/64	2-3/8
2-1/4	2-51/64			1-1/4	25°	1-57/64	2-7/8

BODY OD	P	Q	R	S	T DIA	U DIA	V
5/16	3/32	3/16	1/2	5/64	.067	25/64	5/32
1/2	3/32	5/16**	5/8	9/64	.093	19/32**	7/32**
3/4	1/8	5/16	3/4	17/64	.104	55/64	7/32
1	1/8	5/16	59/64	23/64	.125	1-5/32	7/32
1-3/8	3/16	7/16	1-7/64	17/32	.147	1-17/32	9/32
1-3/4	3/16		1-25/64	11/16	.173	1-31/32	
2-1/4	3/16		1-41/64	7/8	.173	2-15/32	

** Q = 3/16, U = 39/64, V = 5/32 on 1/2" long liner bushings.

APPLICATIONS:

Similar to an SF renewable bushing, but with passages to direct coolant to the cutting area. This design is particularly good for washing away chips, especially when ordered as the combination Directed Coolant Chip Breaker (DCCH). DC bushings require special liners, DCL or DCHL, to direct coolant from a drilled manifold passage to the holes in the bushing's OD wall. Important note: Always order matching liner length (see page 39.)

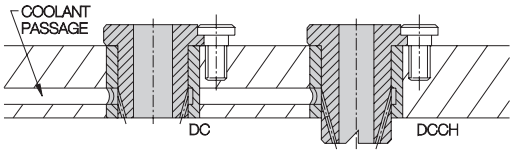

ORDERING EXAMPLES:

DC-20-12-.1250	Standard USA directed-coolant bushing, inch ID
DCCH-20-16-.1250	Same as above, except with chip breakers (go to next length so that chip breakers extend beyond the liner)
DC-20-12-.1772	Standard USA directed-coolant bushing, mm ID (.1772 = 4.50 mm)
DC-20-12-.1250 REAMER	Reamer tolerance on ID
DC-20-12-.1250 NCB	No counterbore on long bushings marked with * (no counterbore is standard on all other bushings)
DCL-32-12	Liner for renewable bushings above
DCHL-32-12	Head liner for renewable bushings above

STANDARD ID TOLERANCES:

From #80 to 1/4"	+.0001/+.0004	From .35 to 3mm	+.002/+.008mm
		Over 3 to 6mm	+.004/+.012mm
Over 1/4 to 3/4"	+.0001/+.0005	Over 6 to 10mm	+.005/+.014mm
		Over 10 to 18mm	+.006/+.017mm
Over 3/4 to 1-1/2"	+.0002/+.0006	Over 18 to 30mm	+.007/+.020mm
		Over 30 to 50mm	+.009/+.025mm
Over 1-1/2 to 2-3/4"	+.0003/+.0007		

REAMER ID TOLERANCES:

From #60 to 1/4"	+.0005/+.0008	From 1 to 3mm	+.006/+.012mm
		Over 3 to 6mm	+.010/+.018mm
Over 1/4 to 1"	+.0006/+.0010	Over 6 to 10mm	+.013/+.022mm
		Over 10 to 18mm	+.016/+.027mm
Over 1 to 1-1/2"	+.0008/+.0012	Over 18 to 30mm	+.020/+.033mm

STANDARD LINER ID TOLERANCES:

5/16"	+.0001/+.0004	1-3/8"	+.0006/+.0010
1/2"	+.0002/+.0005	1-3/4"	+.0008/+.0012
3/4"	+.0003/+.0006	2-1/4"	+.0010/+.0015
1"	+.0004/+.0007		

ID RANGE	OD	LENGTH	PART NO.	PRICE 1-5	LOCK SCREW
.0625-.0934 1/16-#43 1.60-2.35mm	**5/16** .3125-.3123	*3/4	DC-20-12	Contact Factory	LS-1 RC-01 RK-01 RK-11
		*1	DC-20-16		
		*1-3/8	DC-20-22		
.0935-.1935 #42-#10 2.40-4.90mm		*3/4	DC-20-12	Contact Factory	LS-1 RC-01 RK-01 RK-11
		*1	DC-20-16		
		*1-3/8	DC-20-22		
.1405-.3438 #28-11/32 3.60-8.70mm	**1/2** .5000-.4998	*3/4	DC-32-12	Contact Factory	LS-1 RC-01 RK-01 RK-11
		*1	DC-32-16		
		*1-3/8	DC-32-22		
		*1-3/4	DC-32-28		
		*2-1/8	DC-32-34		
.2812-.5625 9/32-9/16 7.20-14.00mm	**3/4** .7500-.7498	1	DC-48-16	Contact Factory	LS-1 RC-01 RK-01 RK-11
		1-3/8	DC-48-22		
		1-3/4	DC-48-28		
		2-1/8	DC-48-34		
		*2-1/2	DC-48-40		
.4688-.7812 15/32-25/32 11.50-19.50mm	**1** 1.0000-.9998	1	DC-64-16	Contact Factory	LS-2 RC-02 RK-02 RK-12
		1-3/8	DC-64-22		
		1-3/4	DC-64-28		
		2-1/8	DC-64-34		
		2-1/2	DC-64-40		
		3	DC-64-48		
.7188-1.0625 23/32–1-1/16 18.50-27.00mm	**1-3/8** 1.3750-1.3747	1	DC-88-16	Contact Factory	LS-2 RC-02 RK-02 RK-12
		1-3/8	DC-88-22		
		1-3/4	DC-88-28		
		2-1/8	DC-88-34		
		2-1/2	DC-88-40		
		3	DC-88-48		
.9688-1.4062 31/32–1-13/32 25.00-35.00mm	**1-3/4** 1.7500-1.7497	1-3/8	DC-112-22	Contact Factory	LS-3 RC-03 RK-03 RK-13
		1-3/4	DC-112-28		
		2-1/8	DC-112-34		
		2-1/2	DC-112-40		
		3	DC-112-48		
1.3438-1.8750 1-11/32–1-7/8 35.00-47.00mm	**2-1/4** 2.2500-2.2496	1-3/8	DC-144-22	Contact Factory	LS-3 RC-03 RK-03 RK-13
		1-3/4	DC-144-28		
		2-1/8	DC-144-34		
		2-1/2	DC-144-40		
		3	DC-144-48		

* Counterbored, leaving correct drill-bearing length and chip clearance (see page 6 for depth).

Carr Lane MANUFACTURING CO.
4200 Carr Lane Ct., P.O. Box 191970
St. Louis, Missouri 63119-7970 USA
Phone: 314-647-6200, FAX: 314-647-5736
Web Site: www.carrlane.com

DIRECTED COOLANT DC

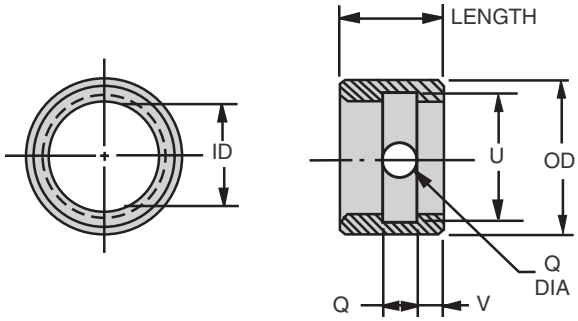

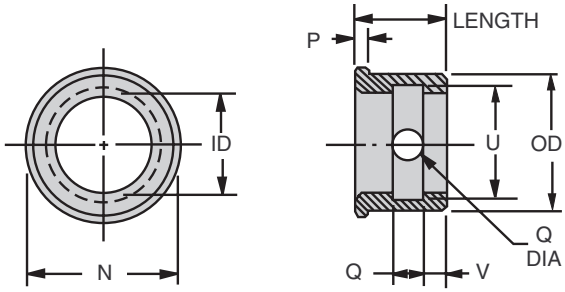

SEE BELOW AND PAGE 38 FOR DIMENSIONS

LINERS

ID	OD	LENGTH	LINER PART NO.	PRICE	MATCHING RENEWABLE BUSHING STANDARD	MATCHING RENEWABLE BUSHING CHIP BREAKER
5/16	1/2 .5017-.5014 (.520-.515 UNG)	1/2	DCL-32-8	Please see our web catalog for pricing.	—	DCCH-20-12
		3/4	DCL-32-12		DC-20-12	DCCH-20-16
		1	DCL-32-16		DC-20-16	DCCH-20-22
		1-3/8	DCL-32-22		DC-20-22	—
1/2	3/4 .7518-.7515 (.770-.765 UNG)	1/2	DCL-48-8		—	DCCH-32-12
		3/4	DCL-48-12		DC-32-12	DCCH-32-16
		1	DCL-48-16		DC-32-16	DCCH-32-22
		1-3/8	DCL-48-22		DC-32-22	DCCH-32-28
		1-3/4	DCL-48-28		DC-32-28	DCCH-32-34
		2-1/8	DCL-48-34		DC-32-34	—
3/4	1 1.0018-1.0015 (1.020-1.015 UNG)	3/4	DCL-64-12		—	DCCH-48-16
		1	DCL-64-16		DC-48-16	DCCH-48-22
		1-3/8	DCL-64-22		DC-48-22	DCCH-48-28
		1-3/4	DCL-64-28		DC-48-28	DCCH-48-34
		2-1/8	DCL-64-34		DC-48-34	DCCH-48-40
		2-1/2	DCL-64-40		DC-48-40	—
1	1-3/8 1.3772-1.3768 (1.395-1.390 UNG)	3/4	DCL-88-12		—	DCCH-64-16
		1	DCL-88-16		DC-64-16	DCCH-64-22
		1-3/8	DCL-88-22		DC-64-22	DCCH-64-28
		1-3/4	DCL-88-28		DC-64-28	DCCH-64-34
		2-1/8	DCL-88-34		DC-64-34	DCCH-64-40
		2-1/2	DCL-88-40		DC-64-40	DCCH-64-48
		3	DCL-88-48		DC-64-48	—
1-3/8	1-3/4 1.7523-1.7519 (1.770-1.765 UNG)	3/4	DCL-112-12		—	DCCH-88-16
		1	DCL-112-16		DC-88-16	DCCH-88-22
		1-3/8	DCL-112-22		DC-88-22	DCCH-88-28
		1-3/4	DCL-112-28		DC-88-28	DCCH-88-34
		2-1/8	DCL-112-34		DC-88-34	DCCH-88-40
		2-1/2	DCL-112-40		DC-88-40	DCCH-88-48
		3	DCL-112-48		DC-88-48	—
1-3/4	2-1/4 2.2525-2.2521 (2.270-2.265 UNG)	1	DCL-144-16		—	DCCH-112-22
		1-3/8	DCL-144-22		DC-112-22	DCCH-112-28
		1-3/4	DCL-144-28		DC-112-28	DCCH-112-34
		2-1/8	DCL-144-34		DC-112-34	DCCH-112-40
		2-1/2	DCL-144-40		DC-112-40	DCCH-112-48
		3	DCL-144-48		DC-112-48	—
2-1/4	2-3/4 2.7526-2.7522 (2.770-2.765 UNG)	1	DCL-176-16		—	DCCH-144-22
		1-3/8	DCL-176-22		DC-144-22	DCCH-144-28
		1-3/4	DCL-176-28		DC-144-28	DCCH-144-34
		2-1/8	DCL-176-34		DC-144-34	DCCH-144-40
		2-1/2	DCL-176-40		DC-144-40	DCCH-144-48
		3	DCL-176-48		DC-144-48	—

HEAD LINERS

HEAD LINER PART NO.	PRICE	MATCHING RENEWABLE BUSHING STANDARD	MATCHING RENEWABLE BUSHING CHIP BREAKER
DCHL-32-8	Please see our web catalog for pricing.	—	DCCH-20-12
DCHL-32-12		DC-20-12	DCCH-20-16
DCHL-32-16		DC-20-16	DCCH-20-22
DCHL-32-22		DC-20-22	—
DCHL-48-8		—	DCCH-32-12
DCHL-48-12		DC-32-12	DCCH-32-16
DCHL-48-16		DC-32-16	DCCH-32-22
DCHL-48-22		DC-32-22	DCCH-32-28
DCHL-48-28		DC-32-28	DCCH-32-34
DCHL-48-34		DC-32-34	—
DCHL-64-12		—	DCCH-48-16
DCHL-64-16		DC-48-16	DCCH-48-22
DCHL-64-22		DC-48-22	DCCH-48-28
DCHL-64-28		DC-48-28	DCCH-48-34
DCHL-64-34		DC-48-34	DCCH-48-40
DCHL-64-40		DC-48-40	—
DCHL-88-12		—	DCCH-64-16
DCHL-88-16		DC-64-16	DCCH-64-22
DCHL-88-22		DC-64-22	DCCH-64-28
DCHL-88-28		DC-64-28	DCCH-64-34
DCHL-88-34		DC-64-34	DCCH-64-40
DCHL-88-40		DC-64-40	DCCH-64-48
DCHL-88-48		DC-64-48	—
DCHL-112-12		—	DCCH-88-16
DCHL-112-16		DC-88-16	DCCH-88-22
DCHL-112-22		DC-88-22	DCCH-88-28
DCHL-112-28		DC-88-28	DCCH-88-34
DCHL-112-34		DC-88-34	DCCH-88-40
DCHL-112-40		DC-88-40	DCCH-88-48
DCHL-112-48		DC-88-48	—
DCHL-144-16		—	DCCH-112-22
DCHL-144-22		DC-112-22	DCCH-112-28
DCHL-144-28		DC-112-28	DCCH-112-34
DCHL-144-34		DC-112-34	DCCH-112-40
DCHL-144-40		DC-112-40	DCCH-112-48
DCHL-144-48		DC-112-48	—
DCHL-176-16		—	DCCH-144-22
DCHL-176-22		DC-144-22	DCCH-144-28
DCHL-176-28		DC-144-28	DCCH-144-34
DCHL-176-34		DC-144-34	DCCH-144-40
DCHL-176-40		DC-144-40	DCCH-144-48
DCHL-176-48		DC-144-48	—

Carr Lane®
MANUFACTURING CO.
4200 Carr Lane Ct., P.O. Box 191970
St. Louis, Missouri 63119-7970 USA
Phone: 314-647-6200, FAX: 314-647-5736
Web Site: www.carrlane.com

OIL GROOVE

APPLICATIONS:

Oil grooves are available on most drill-bushing types, including P, H, and SF. Use when you need complete drill lubrication and cooling, such as when drilling hardened steel. Oil grooves are specially designed coolant passageways in the bushing's ID wall. Choose from 25 different groove styles. End wipers are also available, to keep out dirt and chips.

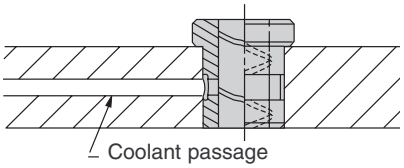

ORDERING EXAMPLES:

P-48-16-.5000-AJ	P bushing with AJ oil groove, inch ID
P-48-16-.4724-AJ	P bushing with AJ oil groove, mm ID (.4724 = 12.00mm)
P-48-16-.5000-AJ-AAA	P bushing with AJ oil groove and AAA wiper
SF-48-16-.5000-AJ	SF bushing with AJ oil groove

THREE GENERAL TYPES:

1. With oil hole. A single radial hole in the bushing wall allows coolant to flow from a manifold passage to the internal oil grooves. Bushing must be installed to line up the radial hole with the manifold passage.

2. With oil hole and external groove. OD groove allows coolant to flow around the bushing, then through the radial hole in the bushing's wall to the internal oil grooves. Allows installing the bushing at any orientation, and mounting bushings in series using a single manifold passage. This type is our most popular.

3. Without oil feed. No external coolant feed through a manifold passage, so all coolant enters through the top. This type is also commonly used as a bearing bushing, packed with oil or grease.

OIL-GROOVE STYLES:

We offer a wide selection of oil-groove styles in each general type. This allows choosing a style to suit various operating conditions, lubrication requirements, and individual preferences.

OPTIONAL WIPERS:

To guard against dirt and chips entering the bushing ID, order oil-groove bushings with a wiper end. Note: do not order an oil-groove style that breaks out at the wiper end (AA, AB, AG, AH, AD, or AE). Order style AAA for headless bushings (install wiper in either direction). Order style ABB or ACC for head-type bushings.

TECHNICAL DATA:

Oil-groove dimensions - 1/16" wide x 1/32" deep
Oil-hole dimensions - 1/4" diameter
External-groove dimensions - 5/16" wide x 3/64" deep

Allowable ID range - 1/2" to 8"
Allowable length range - 1/2" to 8"

Oil grooves stop 1/8" short of bushing end

PRICING:

Please contact factory for pricing on oil-groove bushings.

OPTIONAL WIPERS

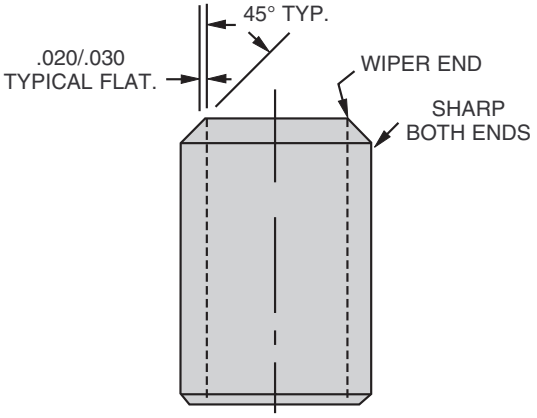

STYLE AAA
HEADLESS BUSHINGS

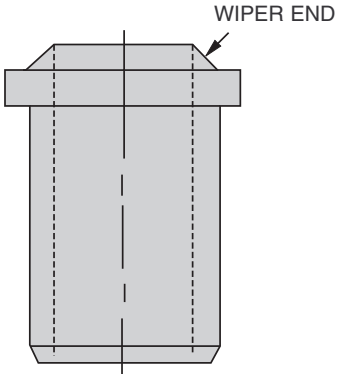

STYLE ABB
HEAD-TYPE BUSHINGS

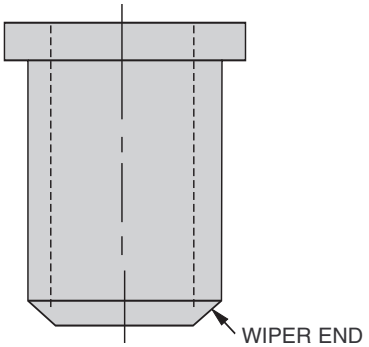

STYLE ACC
HEAD-TYPE BUSHINGS

MANUFACTURING CO.
4200 Carr Lane Ct., P.O. Box 191970
St. Louis, Missouri 63119-7970 USA
Phone: 314-647-6200, FAX: 314-647-5736
Web Site: www.carrlane.com

(12/07)

OIL GROOVE

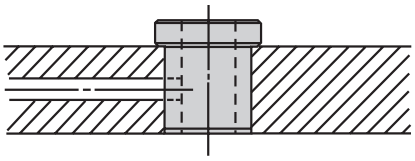

WITH OIL HOLE

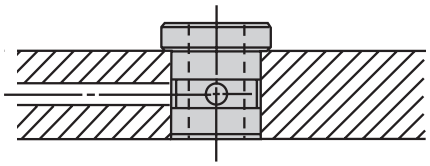

WITH OIL HOLE & EXTERNAL GROOVE

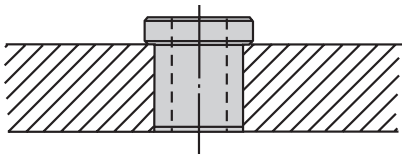

WITHOUT OIL FEED

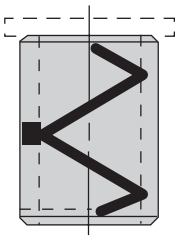

AC
Helix

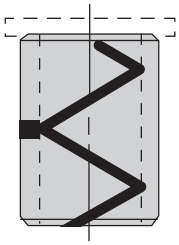

AA
Helix
Open Bottom

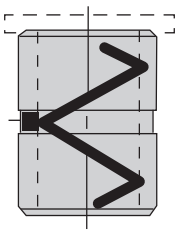

AJ
Helix

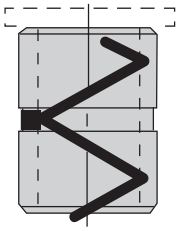

AG
Helix
Open Bottom

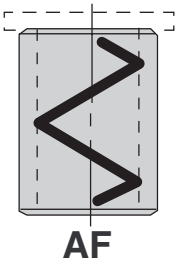

AF
Helix

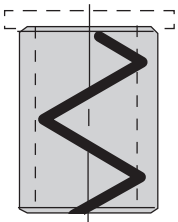

AD
Helix
Open Bottom

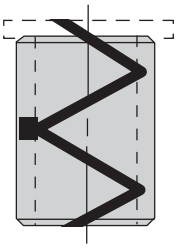

AB
Helix
Open both ends

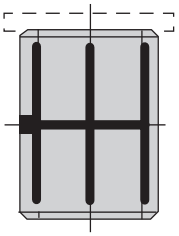

AL
Straight

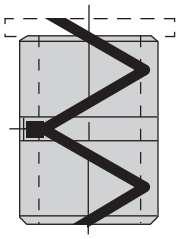

AH
Helix
Open both ends

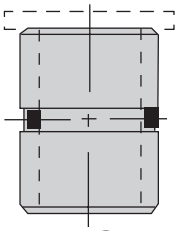

AO
Two Holes

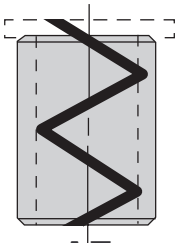

AE
Helix
Open both ends

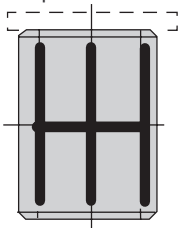

AK
Straight

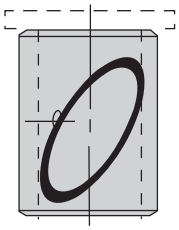

AR
Loop

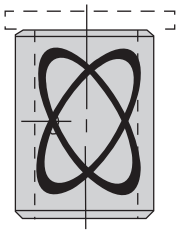

AU
Double Loop

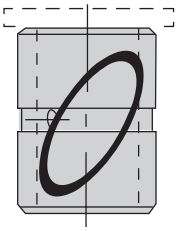

AS
Loop

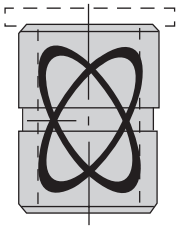

AV
Double Loop

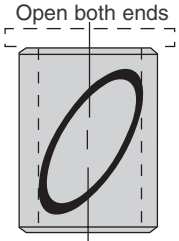

AT
Loop

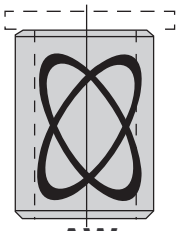

AW
Double Loop

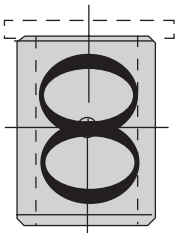

AN
Figure 8

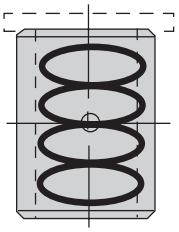

AX
Double Figure 8

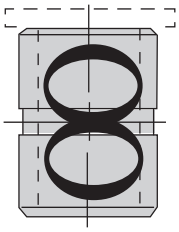

AP
Figure 8

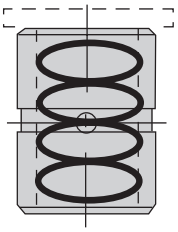

AY
Double Figure 8

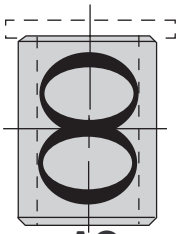

AQ
Figure 8

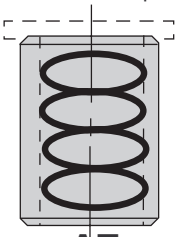

AZ
Double Figure 8

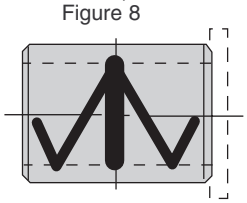

AM
Helix
with ID groove

MANUFACTURING CO.
4200 Carr Lane Ct., P.O. Box 191970
St. Louis, Missouri 63119-7970 USA
Phone: 314-647-6200, FAX: 314-647-5736
Web Site: www.carrlane.com

OIL GROOVE

OIL-GROOVE CONVERSION CHART

Carr Lane	Ace	Acme	American	Briney	Economy	United	Universal	Welch
Style AA	Type 1	Style 5	Style 1	Style A	Style A	Style 1A	Style A	Style A
Style AB	Type 2	Style 8	Style 2	Style B	Style B	Style 2A	Style B	Style B
Style AC	Type 3	Style 2	Style 3	Style C	Style C	Style 3A	Style C	Style C
Style AD	Type 4	Style 4	Style 4	Style D	Style D	Style 1	Style D	Style D
Style AE	Type 6	Style 7	Style 5	Style E	Style E	Style 2	Style E	Style E
Style AF	Type 5	Style 1	Style 6	Style F	Style F	Style 3	Style F	Style F
Style AG	Type 7	Style 6	Style 7	Style G	Style G	Style 1B	Style G	Style G
Style AH	Type 8	Style 9	Style 8	Style H	Style H	Style 2B	Style H	Style H
Style AJ	Type 9	Style 3	Style 9	Style J	Style J	Style 3B	Style J	Style J
Style AK	Type 10	Style 10	Style 10	Style K	Style K	Style 4	Style K	Style K
Style AL	Type 11	Style 11	Style 11	Style L	Style L	Style 4A	Style L	Style L
Style AM	Type 12	—	Style 12	Style M	Style M	Style 6	Style M	Style M
Style AN	Type 14	Style 20	Style 13	Style N	Style N	Style 7A	Style N	Style N
Style AO	Type 13	Style 12	Style 14	Style O	Style O	Style 12C	Style O	Style O
Style AP	Type 15	Style 21	Style 15	Style P	Style P	Style 7B	Style P	Style P
Style AQ	Type 16	Style 19	Style 16	Style Q	Style Q	Style 7	Style Q	Style Q
Style AR	Type 17	Style 14	Style 17	Style R	Style R	Style 9A	Style R	Style R
Style AS	Type 18	Style 15	Style 18	Style S	Style S	Style 9B	Style S	Style S
Style AJ	Type 19	Style 13	Style 19	Style T	Style T	Style 9	Style T	Style T
Style AU	Type 20	Style 17	Style 20	Style U	Style U	Style 10A	Style U	Style U
Style AV	Type 21	Style 18	Style 21	Style V	Style V	Style 10B	Style V	Style V
Style AW	Type 22	Style 16	Style 22	Style W	Style W	Style 10	Style W	Style W
Style AX	Type 23	Style 23	Style 23	Style X	Style X	Style 8A	Style X	Style X
Style AY	Type 24	Style 24	Style 24	Style Y	Style Y	Style 8B	Style Y	Style Y
Style AZ	Type 25	Style 22	Style 25	Style Z	Style Z	Style 8	Style Z	Style Z

WIPER CONVERSION CHART

Carr Lane	Ace	Acme	American	Briney	Economy	United	Universal	Welch
Style AAA	Type WEA	Style WA	Style A	Style AA	Style AA	Style PE	Style AA	Style AA
Style ABB	Type WEB	Style WC	Style B	Style BB	Style BB	Style HW	Style BB	Style BB
Style ACC	Type WEC	Style WB	Style C	Style CC	Style CC	Style HE	Style CC	Style CC

Carr Lane®
MANUFACTURING CO.
4200 Carr Lane Ct., P.O. Box 191970
St. Louis, Missouri 63119-7970 USA
Phone: 314-647-6200, FAX: 314-647-5736
Web Site: www.carrlane.com

(2/89)

DIAMOND GROOVE DG

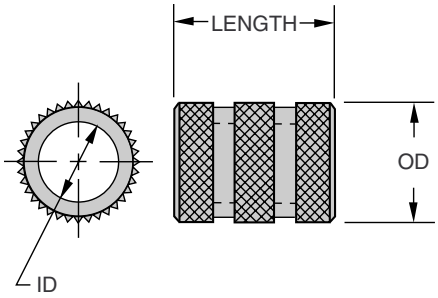

APPLICATIONS:

A bushing for cast-in-place or potted installation. Diamond-knurled OD provides superior holding strength against both rotational and axial forces. Since the bushing's OD is not ground, keep the ID accurately located during casting or potting to ensure accuracy in the finished tool.

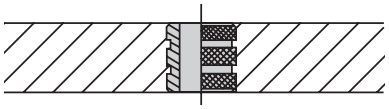

ORDERING EXAMPLES:

DG-26-16-.1875	Standard USA bushing, inch ID
DG-26-16-.1772	Standard USA bushing, mm ID (.1772 = 4.50mm)
DG-26-16-.1875 REAMER	Reamer tolerance on ID
DG-26-16-.1875 NCB	No counterbore on long bushings marked with * (no counterbore is standard on all other bushings)
DGM-8-12-4.50	Standard metric bushing

Prices shown here apply to standard bushings only, for a standard drill size within the stated ID range. See back cover for decimal equivalents. To price non-standard sizes, including all reamer and tap-guide bushings, see page 7.

STANDARD ID TOLERANCES:

From #55 to 1/4"	+.0001/+.0004	From 1 to 3mm	+.002/+.008mm
		Over 3 to 6mm	+.004/+.012mm
Over 1/4 to 3/4"	+.0001/+.0005	Over 6 to 10mm	+.005/+.014mm
		Over 10 to 18mm	+.006/+.017mm
Over 3/4 to 1-1/2"	+.0002/+.0006	Over 18 to 19mm	+.007/+.020mm
		(G6 tolerance)	

REAMER ID TOLERANCES:

From #60 to 1/4"	+.0005/+.0008	From 1 to 3mm	+.006/+.012mm
		Over 3 to 6mm	+.010/+.018mm
Over 1/4 to 1"	+.0006/+.0010	Over 6 to 10mm	+.013/+.022mm
		Over 10 to 18mm	+.016/+.027mm
		Over 18 to 19mm	+.020/+.033mm
		(F6 tolerance)	

ID RANGE	OD	LENGTH	ANSI PART NO.	PRICE 1-5
.0520-.0995 #55-#39 1.35-2.50mm	**13/64** .223-.213	1/4	DG-13-4	Please see our web catalog for pricing.
		5/16	DG-13-5	
		3/8	DG-13-6	
		1/2	DG-13-8	
.0980-.1406 #40-9/64 2.50-3.50mm	**1/4** .275-.260	1/4	DG-16-4	
		5/16	DG-16-5	
		3/8	DG-16-6	
		1/2	DG-16-8	
		*3/4	DG-16-12	
.1250-.1935 1/8-#10 3.20-4.90mm	**5/16** .337-.322	1/4	DG-20-4	
		5/16	DG-20-5	
		3/8	DG-20-6	
		1/2	DG-20-8	
		3/4	DG-20-12	
		*1	DG-20-16	
.1562-.2570 5/32-F 4.00-6.50mm	**13/32** .431-.416	1/4	DG-26-4	
		5/16	DG-26-5	
		3/8	DG-26-6	
		1/2	DG-26-8	
		3/4	DG-26-12	
		*1	DG-26-16	
.1562-.3160 5/32-O 4.00-8.00mm	**1/2** .525-.510	5/16	DG-32-5	
		3/8	DG-32-6	
		1/2	DG-32-8	
		3/4	DG-32-12	
		*1	DG-32-16	
.3125-.4375 5/16-7/16 7.90-11.00mm	**5/8** .650-.635	3/8	DG-40-6	
		1/2	DG-40-8	
		3/4	DG-40-12	
		1	DG-40-16	
		1-3/8	DG-40-22	
.3125-.5312 5/16-17/32 8.00-13.00mm	**3/4** .775-.760	3/8	DG-48-6	
		1/2	DG-48-8	
		3/4	DG-48-12	
		1	DG-48-16	
		1-3/8	DG-48-22	
.5000-.6562 1/2-21/32 13.00-16.50mm	**7/8** .900-.885	3/8	DG-56-6	
		1/2	DG-56-8	
		3/4	DG-56-12	
		1	DG-56-16	
		1-3/8	DG-56-22	
.5000-.7656 1/2-49/64 13.00-19.00mm	**1** 1.035-1.010	1/2	DG-64-8	
		3/4	DG-64-12	
		1	DG-64-16	
		1-3/8	DG-64-22	
		1-1/2	DG-64-24	

* Counterbored, leaving correct drill-bearing length and clearance (see page 6 for bearing length).

QUANTITY DISCOUNTS

Quantity	1 -5	6 -11	12 -23	24 -49	50 -99	100 -199	200 -499	500 Up
Discount %	Net	18%	29%	34%	42%	48%	50%	52%
Multiplier	1.00	.82	.71	.66	.58	.52	.50	.48

CarrLane® MANUFACTURING CO.
4200 Carr Lane Ct., P.O. Box 191970
St. Louis, Missouri 63119-7970 USA
Phone: 314-647-6200, FAX: 314-647-5736
Web Site: www.carrlane.com

DGM DIAMOND GROOVE METRIC

ID RANGE (G6)	OD	LENGTH	ANSI PART NO.	PRICE 1-5
1.00-1.80mm	5mm 5.50-5.25mm	6mm	DGM-5-6	Please see our web catalog for pricing.
		9mm	DGM-5-9	
1.81-2.60mm		6mm	DGM-5-6	
		9mm	DGM-5-9	
2.61-3.30mm	6mm 6.65-6.25mm	8mm	DGM-6-8	
		12mm	DGM-6-12	
		16mm	DGM-6-16	
3.31-4.00mm	7mm 7.65-7.25mm	8mm	DGM-7-8	
		12mm	DGM-7-12	
		16mm	DGM-7-16	
4.01-5.00mm	8mm 8.65-8.25mm	8mm	DGM-8-8	
		12mm	DGM-8-12	
		16mm	DGM-8-16	
5.01-6.00mm	10mm 10.65-10.25mm	10mm	DGM-10-10	
		16mm	DGM-10-16	
		20mm	DGM-10-20	
6.01-8.00mm	12mm 12.65-12.25mm	10mm	DGM-12-10	
		16mm	DGM-12-16	
		20mm	DGM-12-20	
8.01-10.00mm	15mm 15.65-15.25mm	12mm	DGM-15-12	
		20mm	DGM-15-20	
		25mm	DGM-15-25	
10.01-12.00mm	18mm 18.65-18.25mm	12mm	DGM-18-12	
		20mm	DGM-18-20	
		25mm	DGM-18-25	
12.01-15.00mm	22mm 22.65-22.25mm	16mm	DGM-22-16	
		28mm	DGM-22-28	
		36mm	DGM-22-36	
15.01-18.00mm	26mm 26.90-26.25mm	16mm	DGM-26-16	
		28mm	DGM-26-28	
		36mm	DGM-26-36	

Something you get for nothing is usually worth it.

Temper is what gets most of us into trouble. Pride is what keeps us there.

QUANTITY DISCOUNTS

Quantity	1 -5	6 -11	12 -23	24 -49	50 -99	100 -199	200 -499	500 Up
Discount %	Net	18%	29%	34%	42%	48%	50%	52%
Multiplier	1.00	.82	.71	.66	.58	.52	.50	.48

Carr Lane MANUFACTURING CO.
4200 Carr Lane Ct., P.O. Box 191970
St. Louis, Missouri 63119-7970 USA
Phone: 314-647-6200, FAX: 314-647-5736
Web Site: www.carrlane.com

(7/01)

SERRATA GROOVE SG

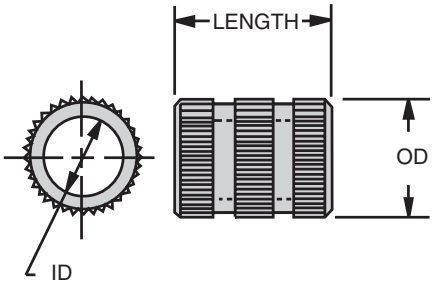

ID RANGE	OD	LENGTH	ANSI PART NO.	PRICE 1-5
.0520-.0995 #55-#39 1.35-2.50mm	**13/64** .223-.213	1/4	SG-13-4	Please see our web catalog for pricing.
		5/16	SG-13-5	
		3/8	SG-13-6	
		1/2	SG-13-8	
.0980-.1406 #40-9/64 2.50-3.50mm	**1/4** .275-.260	1/4	SG-16-4	
		5/16	SG-16-5	
		3/8	SG-16-6	
		1/2	SG-16-8	
		*3/4	SG-16-12	
.1250-.1935 1/8-#10 3.20-4.90mm	**5/16** .337-.322	1/4	SG-20-4	
		5/16	SG-20-5	
		3/8	SG-20-6	
		1/2	SG-20-8	
		3/4	SG-20-12	
		*1	SG-20-16	
.1562-.2570 5/32-F 4.00-6.50mm	**13/32** .431-.416	1/4	SG-26-4	
		5/16	SG-26-5	
		3/8	SG-26-6	
		1/2	SG-26-8	
		3/4	SG-26-12	
		*1	SG-26-16	
.1562-.3160 5/32-O 4.00-8.00mm	**1/2** .525-.510	5/16	SG-32-5	
		3/8	SG-32-6	
		1/2	SG-32-8	
		3/4	SG-32-12	
		*1	SG-32-16	
.3125-.4375 5/16-7/16 7.90-11.00mm	**5/8** .650-.635	3/8	SG-40-6	
		1/2	SG-40-8	
		3/4	SG-40-12	
		1	SG-40-16	
		1-3/8	SG-40-22	
.3125-.5312 5/16-17/32 8.00-13.00mm	**3/4** .775-.760	3/8	SG-48-6	
		1/2	SG-48-8	
		3/4	SG-48-12	
		1	SG-48-16	
		1-3/8	SG-48-22	
.5000-.6562 1/2-21/32 13.00-16.50mm	**7/8** .900-.885	3/8	SG-56-6	
		1/2	SG-56-8	
		3/4	SG-56-12	
		1	SG-56-16	
		1-3/8	SG-56-22	
.5000-.7656 1/2-49/64 13.00-19.00mm	**1** 1.035-1.010	1/2	SG-64-8	
		3/4	SG-64-12	
		1	SG-64-16	
		1-3/8	SG-64-22	
		1-1/2	SG-64-24	

* Counterbored, leaving correct drill-bearing length and clearance (see page 6 for bearing length).

APPLICATIONS:

Can be cast in place or potted, just as a diamond-groove bushing, or can also be pressed into an installation hole. Straight knurl provides less resistance to axial loads than the diamond knurl on a DG bushing. Since the bushing's OD is not ground, keep the ID accurately located during casting or potting to ensure accuracy in the finished tool.

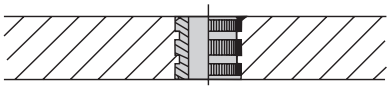

ORDERING EXAMPLES:

SG-26-16-.1875	Standard USA bushing, inch ID
SG-26-16-.1772	Standard USA bushing, mm ID (.1772 = 4.50mm)
SG-26-16-.1875 REAMER	Reamer tolerance on ID
SG-26-16-.1875 NCB	No counterbore on long bushings marked with * (no counterbore is standard on all other bushings)

Prices shown here apply to standard bushings only, for a standard drill size within the stated ID range. See back cover for decimal equivalents. To price non-standard sizes, including all reamer and tap-guide bushings, see page 7.

STANDARD ID TOLERANCES:

From #55 to 1/4"	+.0001/+.0004	From 1 to 3mm	+.002/+.008mm
Over 1/4 to 3/4"	+.0001/+.0005	Over 3 to 6mm	+.004/+.012mm
Over 3/4 to 1-1/2"	+.0002/+.0006	Over 6 to 10mm	+.005/+.014mm
		Over 10 to 18mm	+.006/+.017mm
		Over 18 to 19mm	+.007/+020mm
		(G6 tolerance)	

REAMER ID TOLERANCES:

From #60 to 1/4"	+.0005/+.0008	From 1 to 3mm	+.006/+.012mm
		Over 3 to 6mm	+.010/+.018mm
Over 1/4 to 1"	+.0006/+.0010	Over 6 to 10mm	+.013/+.022mm
		Over 10 to 18mm	+.016/+.027mm
		Over 18 to 19mm	+.020/+.033mm
		(F6 tolerance)	

QUANTITY DISCOUNTS

Quantity	1 -5	6 -11	12 -23	24 -49	50 -99	100 -199	200 -499	500 Up
Discount %	Net	18%	29%	34%	42%	48%	50%	52%
Multiplier	1.00	.82	.71	.66	.58	.52	.50	.48

Carr Lane MANUFACTURING CO.
4200 Carr Lane Ct., P.O. Box 191970
St. Louis, Missouri 63119-7970 USA
Phone: 314-647-6200, FAX: 314-647-5736
Web Site: www.carrlane.com

ULD DIAMOND-KNURL UN-A-LOK® LINER

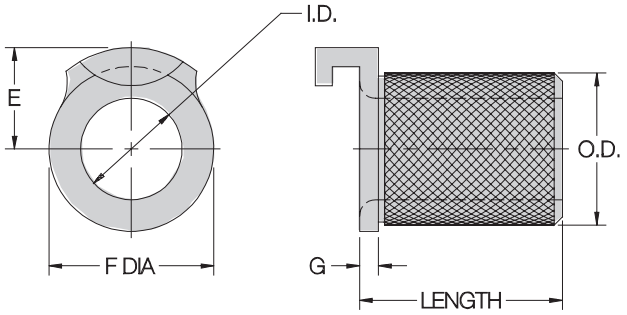

USA

BODY OD	E	F DIA	G
5/16	1/4	.365	3/32
1/2	3/8	9/16	3/32
3/4	1/2	13/16	3/32
1	21/32	1-1/16	1/8
1-3/8	7/8	1-7/16	1/8

METRIC

BODY OD	E	F DIA	G
12mm	9.5mm	15mm	3mm
15mm	11mm	18mm	3mm
18mm	13mm	22mm	4mm
22mm	15.5mm	26mm	4mm
26mm	17.5mm	30mm	4mm

USA

ID	OD	LENGTH	PART NO.	PRICE 1-5
3/16	5/16 .342-.332	5/16	ULD-20-5	Please see our web catalog for pricing.
		3/8	ULD-20-6	
		1/2	ULD-20-8	
		3/4	ULD-20-12	
5/16	1/2 .533-.523	3/8	ULD-32-6	
		1/2	ULD-32-8	
		3/4	ULD-32-12	
1/2	3/4 .785-.775	1/2	ULD-48-8	
		3/4	ULD-48-12	
		1	ULD-48-16	
3/4	1 1.035-1.025	1/2	ULD-64-8	
		3/4	ULD-64-12	
		1	ULD-64-16	
1	1-3/8 1.415-1.405	1/2	ULD-88-8	
		3/4	ULD-88-12	
		1	ULD-88-16	
		1-3/8	ULD-88-22	

METRIC

ID (G6)	OD	LENGTH	PART NO.	PRICE 1-5
8mm	12mm 12.65-12.25mm	10mm	ULDM-12-10	Contact Factory
		16mm	ULDM-12-16	
10mm	15mm 15.65-15.25mm	12mm	ULDM-15-12	Contact Factory
		20mm	ULDM-15-20	
		25mm	ULDM-15-25	
12mm	18mm 18.65-18.25mm	12mm	ULDM-18-12	Contact Factory
		20mm	ULDM-18-20	
		25mm	ULDM-18-25	
15mm	22mm 22.65-22.25mm	16mm	ULDM-22-16	Contact Factory
		28mm	ULDM-22-28	
		36mm	ULDM-22-36	
18mm	26mm 26.90-26.25mm	16mm	ULDM-26-16	Contact Factory
		28mm	ULDM-26-28	
		36mm	ULDM-26-36	

APPLICATIONS:

A liner for cast-in-place or potted installation, used to hold SF renewable drill bushings. Un-A-Lok® liners incorporate a special locking tab that eliminates the need for a lockscrew. Holds only the "slip" side of an SF bushing, not the "fixed" side. Diamond-knurled OD provides superior holding strength against both rotational and axial forces. Since the bushing's OD is not ground, keep the ID accurately located during casting or potting to ensure accuracy in the finished tool.

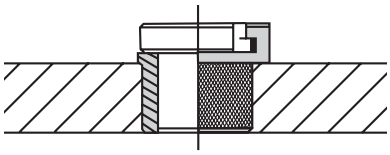

ORDERING EXAMPLES:

ULD-20-5	Standard USA liner bushing
ULDM-12-10	Standard metric liner bushing

STANDARD LINER ID TOLERANCES:

3/16 to 5/16"	+.0001/+.0004	8 to 10mm	+.005/+.014mm
1/2"	+.0002/+.0005	12 to 18mm	+.006/+.017mm
3/4"	+.0003/+.0006	(G6 tolerance)	
1"	+.0004/+.0007		

QUANTITY DISCOUNTS

Quantity	1 -5	6 -11	12 -23	24 -49	50 -99	100 -199	200 -499	500 Up
Discount %	Net	18%	29%	34%	42%	48%	50%	52%
Multiplier	1.00	.82	.71	.66	.58	.52	.50	.48

Carr Lane® MANUFACTURING CO.
4200 Carr Lane Ct., P.O. Box 191970
St. Louis, Missouri 63119-7970 USA
Phone: 314-647-6200, FAX: 314-647-5736
Web Site: www.carrlane.com

EZ-CAST LINER

EZ

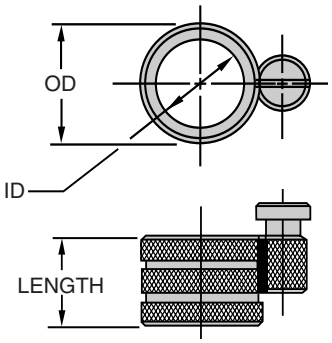

ID	OD	LENGTH	PART NO.	PRICE 1-5
5/16 .3126-.3129	**1/2** .525-.510	1/2	EZ-32-8	Please see our web catalog for pricing.
		3/4	EZ-32-12	
		1	EZ-32-16	
1/2 .5002-.5005	**3/4** .775-.760	1/2	EZ-48-8	
		3/4	EZ-48-12	
		1	EZ-48-16	
		1-3/8	EZ-48-22	
3/4 .7503-.7506	**1** 1.035-1.010	1/2	EZ-64-8	
		3/4	EZ-64-12	
		1	EZ-64-16	
		1-3/8	EZ-64-22	
1 1.0004-1.0007	**1-3/8** 1.410-1.385	3/4	EZ-88-12	
		1	EZ-88-16	
		1-3/8	EZ-88-22	

APPLICATIONS:

Another liner for cast-in-place or potted installation, used to hold SF renewable drill bushings. Unlike diamond-knurl uni-lock liners, EZ-cast liners hold either the “slip” or “fixed” side of an SF bushing, since they include an integral lockscrew holder. Diamond-knurled OD provides superior holding strength against both rotational and axial forces. Since the bushing’s OD is not ground, keep the ID accurately located during casting or potting to ensure accuracy in the finished tool.

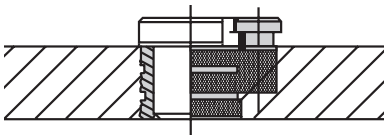

ORDERING EXAMPLE:

EZ-32-8 — Standard USA liner bushing

STANDARD LINER ID TOLERANCES:

5/16"	+.0001/+.0004
1/2"	+.0002/+.0005
3/4"	+.0003/+.0006
1"	+.0004/+.0007

QUANTITY DISCOUNTS

Quantity	1 -5	6 -11	12 -23	24 -49	50 -99	100 -199	200 -499	500 Up
Discount %	Net	18%	29%	34%	42%	48%	50%	52%
Multiplier	1.00	.82	.71	.66	.58	.52	.50	.48

Handy Reference Books

Jig & Fixture Handbook

- 430 pages
- Completely illustrated
- Hardbound manual
- Step-by-step instructions
- Handy reference charts
  - Decimals and fractions
  - Units of measure
  - Trigonometry calculations
  - Much more!

Modular Fixturing Handbook

- 216 pages
- Step-by-step building
- Includes chart of break-even calculations
- Checklist helps you avoid problems caused by missing important steps in building
- Illustrated examples

Jig & Fixture Handbook: **$19.95** — Modular Fixturing Handbook: **$12.00** — Order online at www.carrlane.com/books

CarrLane® MANUFACTURING CO.
4200 Carr Lane Ct., P.O. Box 191970
St. Louis, Missouri 63119-7970 USA
Phone: 314-647-6200, FAX: 314-647-5736
Web Site: www.carrlane.com

TB TEMPLATE

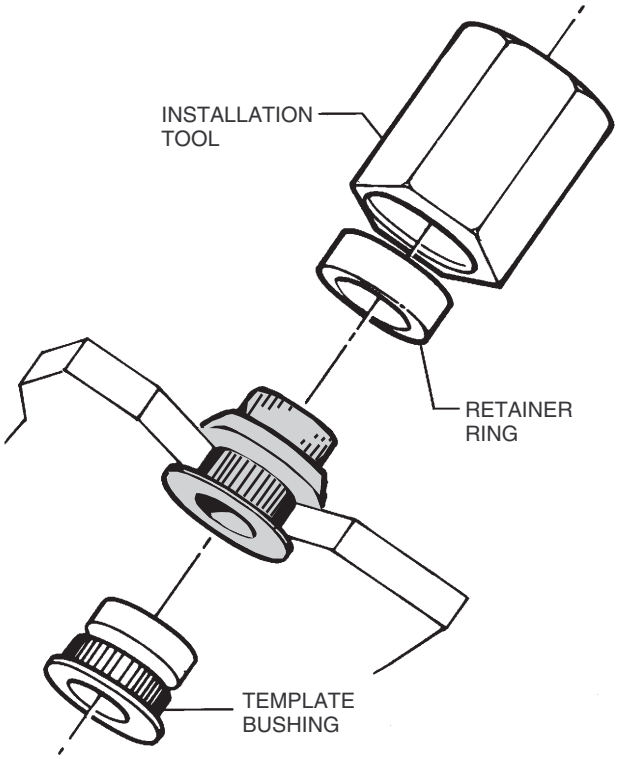

APPLICATIONS:

An economical bushing designed for thin template jig plates from 1/16- to 3/8-inch thick. Bushings are held in place by a retainer ring. The OD serrations prevent the bushing from spinning. Bushings can be removed and reused by breaking the aluminum retainer ring (extra retainer rings available).

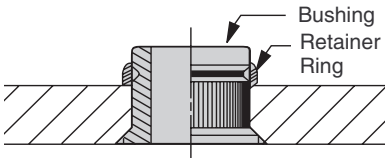

ORDERING EXAMPLES:

TB-24-6-4-.1250-TR-10	Bushing for 1/8" drill and 1/16"-thick template
TB-24-6-4-.1250-TR-30	Bushing for 1/8" drill and 1/8"-thick template
TB-24-6-4-.1250	Bushing only for 1/8" drill (if rings are ordered separately)

Prices shown here apply to standard bushings only, for a standard drill size within the stated ID range. See back cover for decimal equivalents. To price non-standard sizes, including all reamer and tap-guide bushings, see page 7.

STANDARD ID TOLERANCES:

#55 to 1/2" +.0001/+.0011 | 1.30 to 12mm +.002/+.030mm

CONCENTRICITY:

ID concentric with OD to within .002 TIR

INSTALLATION STEPS

1. LAY OUT HOLES

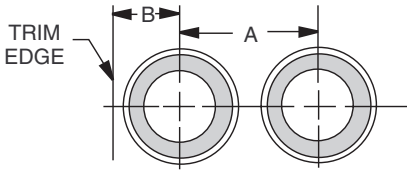

When laying out holes, observe the minimum hole spacing and edge distance listed below:

BUSHING OD	A MINIMUM	B MINIMUM
3/8	.60	.250
1/2	.73	.312
3/4	.98	.438

2. REAM AND COUNTERSINK

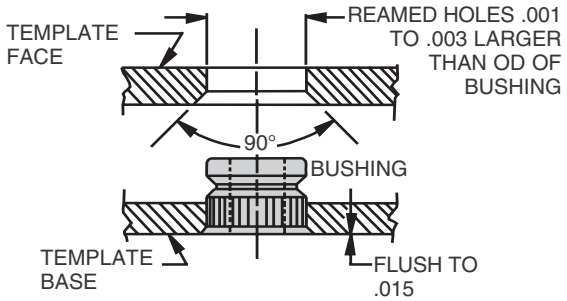

Ream hole .001 to .003 larger than bushing OD. Countersink reamed hole to allow the bushing to seat .015 below flush with surface. For best results, use a piloted countersink tool so that the countersink is concentric and free of chatter marks.

3. INSTALL

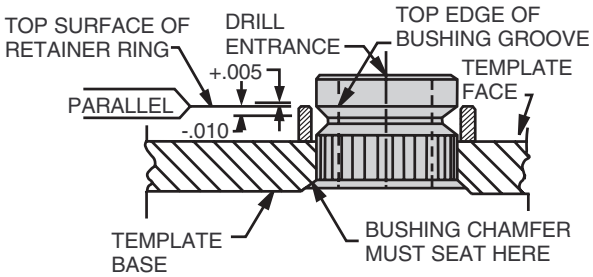

Install Retainer Ring with an arbor press whenever possible. The Installation Tool is also tapped for mounting on a rivet gun or other impact tool. Check that Retainer Ring top surface is within +.005 / -.010 of the bushing groove's top edge before installing.

Carr Lane MANUFACTURING CO.
4200 Carr Lane Ct., P.O. Box 191970
St. Louis, Missouri 63119-7970 USA
Phone: 314-647-6200, FAX: 314-647-5736
Web Site: www.carrlane.com

TEMPLATE TB

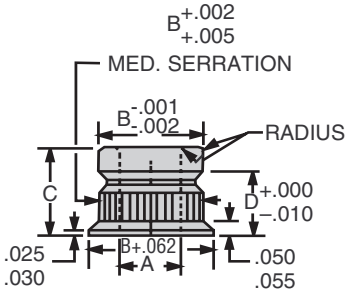

TEMPLATE BUSHINGS WITH RETAINER RINGS

ID RANGE A	OD B	LGTH. C	GRIP D	BUSHING PART NO.	RETAINER RING PART NO.	TEMPLATE THICKNESS	PRICE
.0520-.1960 #55-#9 1.30-5.00mm	3/8	3/8	1/4	TB-24-6-4	TR-10	1/16	Please see our web catalog for pricing.
					TR-20	3/32	
					TR-30	1/8	
			5/16	TB-24-6-5	TR-10	1/8	
					TR-30	3/16	
		1/2	5/16	TB-24-8-5	TR-10	1/8	
					TR-30	3/16	
			3/8	TB-24-8-6	TR-10	3/16	
					TR-30	1/4	
			7/16	TB-24-8-7	TR-10	1/4	
					TR-30	5/16	
.1960-.3160 #9-O 5.00-8.00mm	1/2	3/8	1/4	TB-32-6-4	TR-40	1/16	
					TR-50	3/32	
					TR-60	1/8	
			5/16	TB-32-6-5	TR-40	1/8	
					TR-60	3/16	
		1/2	5/16	TB-32-8-5	TR-40	1/8	
					TR-60	3/16	
			3/8	TB-32-8-6	TR-40	3/16	
					TR-60	1/4	
			7/16	TB-32-8-7	TR-40	1/4	
					TR-60	5/16	
		5/8	1/2	TB-32-10-8	TR-40	5/16	
					TR-60	3/8	
.3125-.5000 5/16-1/2 8.00-12.00mm	3/4	3/8	1/4	TB-48-6-4	TR-70	1/16	
					TR-80	3/32	
					TR-90	1/8	
			5/16	TB-48-6-5	TR-70	1/8	
					TR-90	3/16	
		1/2	5/16	TB-48-8-5	TR-70	1/8	
					TR-90	3/16	
			3/8	TB-48-8-6	TR-70	3/16	
					TR-90	1/4	
			7/16	TB-48-8-7	TR-70	1/4	
					TR-90	5/16	
		5/8	1/2	TB-48-10-8	TR-70	5/16	
					TR-90	3/8	

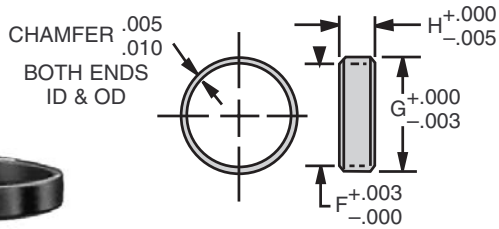

EXTRA RETAINER RINGS

PART NO.	F ID	G OD	H	PRICE
TR-10	.375	.468	.205	Please see our web catalog for pricing.
TR-20			.173	
TR-30			.142	
TR-40	.500	.593	.205	
TR-50			.173	
TR-60			.142	
TR-70	.750	.843	.205	
TR-80			.173	
TR-90			.142	

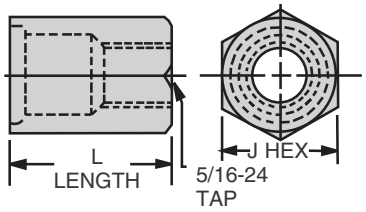

INSTALLATION TOOLS

PART NO.	FOR BUSHING SERIES	FOR RING SERIES	J	L	NET PRICE	COMPLETE SET PART NO.	COMPLETE SET NET PRICE
TBT-100	TB-24	TR-10,TR-20,TR-30	5/8	1	See our web catalog	TBT-400	See our web catalog
TBT-200	TB-32	TR-40,TR-50,TR-60	3/4	1			
TBT-300	TB-48	TR-70,TR-80,TR-90	1	1			

Carr Lane MANUFACTURING CO.
4200 Carr Lane Ct., P.O. Box 191970
St. Louis, Missouri 63119-7970 USA
Phone: 314-647-6200, FAX: 314-647-5736
Web Site: www.carrlane.com

TTB THREADED TEMPLATE

Retainer Ring

Threaded Template Bushing

NEW!

STANDARD ID TOLERANCE:

From #55 to 1/2" +.0001/+.0015
(ID concentric with OD to within .002" TIR)

INSTALLATION:

Drill hole in jig plate to nominal bushing OD (B diameter). Countersink 90° to allow bushing to seat flush to .015" below surface of plate (standard version only, not flanged version). Install and tighten Retainer Ring to secure. To make Retainer Ring installation easier, we offer a handy Socket-Type Installation Tool that fits 1/4" square drives.

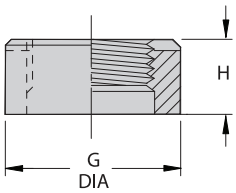

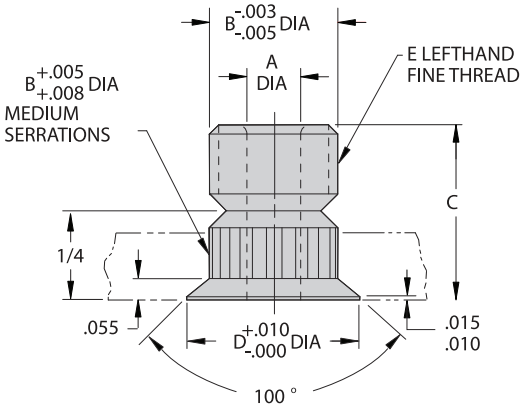

APPLICATIONS:

This economical bushing is designed for thin template jig plates from 3/64 to 3/8" thick. Bushings are held in place by a threaded Retainer Ring (order separately). Left-hand thread is self tightening during drilling to prevent the Retainer Ring from loosening. Flush contact of the Retainer Ring against the jig plate ensures perpendicular drill alignment. OD serrations prevent the bushing from rotating during drilling. Choose standard countersunk type for flush mounting, or flanged type for installation without countersinking the jig plate. Threaded Template Bushings can be easily removed to replace or reuse.

ORDERING EXAMPLES:

Available in 3/8", 1/2", 5/8", 3/4", and 1" OD sizes. The prices shown apply to standard bushings only, with any standard USA or metric ID size within the stated range.

TTB-24-.1250	Bushing with 1/8" ID
TTR-24-3	Matching Retainer Ring for 1/4" thick template

THREADED TEMPLATE BUSHINGS — STANDARD (ORDER BUSHING AND RETAINER RING SEPARATELY)

A ID RANGE	B OD	C LENGTH	D DIA	E	G DIA	H	BUSHING PART NO.	RETAINER RING PART NO.	TEMPLATE THICKNESS	PRICE
.0520-.1960 #55-#9 1.30-5.00mm	3/8	1/2	.475	3/8-24 LH	1/2	3/8	TTB-24	TTR-24-6	3/64-1/8	Please see our web catalog for pricing
						5/16		TTR-24-5	9/64-3/16	
						3/16		TTR-24-3	13/64-3/8	
.1960-.3160 #9-0 5.00-8.00mm	1/2	1/2	.600	1/2-20 LH	5/8	3/8	TTB-32	TTR-32-6	3/64-1/8	
						5/16		TTR-32-5	9/64-3/16	
						3/16		TTR-32-3	13/64-3/8	
.3125-.4375 5/16-7/16 7.90-11.00mm	5/8	1/2	.725	5/8-18 LH	3/4	3/8	TTB-40	TTR-40-6	3/64-1/8	
						5/16		TTR-40-5	9/64-3/16	
						3/16		TTR-40-3	13/64-3/8	
.3125-.5312 5/16-17/32 8.00-13.00mm	3/4	1/2	.850	3/4-16 LH	1	3/8	TTB-48	TTR-48-6	3/64-1/8	
						5/16		TTR-48-5	9/64-3/16	
						3/16		TTR-48-3	13/64-3/8	
.5000-.7656 1/2-49/64 13.00-19.00mm	1	1/2	1.100	1"-14 LH	1-1/4	3/8	TTB-64	TTR-64-6	3/64-1/8	
						5/16		TTR-64-5	9/64-3/16	
						3/16		TTR-64-3	13/64-3/8	

Carr Lane MANUFACTURING CO.
4200 Carr Lane Ct., P.O. Box 191970
St. Louis, Missouri 63119-7970 USA
Phone: 314-647-6200, FAX: 314-647-5736
Web Site: www.carrlane.com

THREADED TEMPLATE TTB

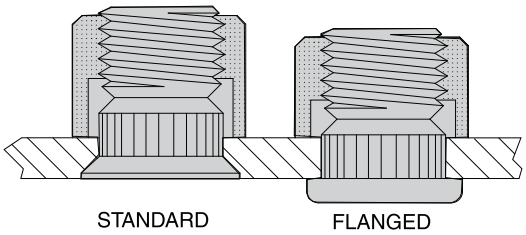

Choose standard countersunk type for flush mounting, or flanged type for installation without countersinking the jig plate.

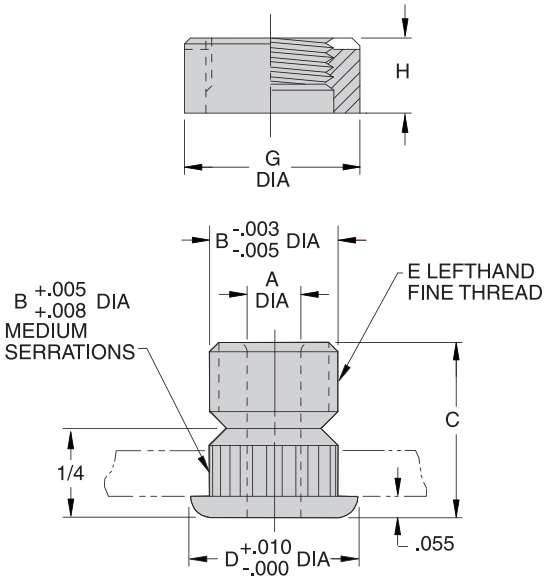

THREADED TEMPLATE BUSHES — FLANGED (ORDER BUSH AND RETAINER RING SEPERATELY)

A ID RANGE	B OD	C LENGTH	D DIA	E	G DIA	H	BUSH PART NO.	RETAINER RING PART NO.	TEMPLATE THICKNESS	PRICE
.0520-.1960 #55-#9 1.30-5.00mm	3/8	1/2	.475	3/8-24 LH	1/2	3/8	TTBF-24	TTR-24-6	3/64-1/8	Please see our web catalog for pricing
						5/16		TTR-24-5	9/64-3/16	
						3/16		TTR-24-3	13/64-3/8	
.1960-.3160 #9-0 5.00-8.00mm	1/2	1/2	.600	1/2-20 LH	5/8	3/8	TTBF-32	TTR-32-6	3/64-1/8	
						5/16		TTR-32-5	9/64-3/16	
						3/16		TTR-32-3	13/64-3/8	
.3125-.4375 5/16-7/16 7.90-11.00mm	5/8	1/2	.725	5/8-18 LH	3/4	3/8	TTBF-40	TTR-40-6	3/64-1/8	
						5/16		TTR-40-5	9/64-3/16	
						3/16		TTR-40-3	13/64-3/8	
.3125-.5312 5/16-17/32 8.00-13.00mm	3/4	1/2	.850	3/4-16 LH	1	3/8	TTBF-48	TTR-48-6	3/64-1/8	
						5/16		TTR-48-5	9/64-3/16	
						3/16		TTR-48-3	13/64-3/8	
.5000-.7656 1/2-49/64 13.00-19.00mm	1	5/8	1.100	1"-14 LH	1-1/4	3/8	TTBF-64	TTR-64-6	3/64-1/8	
						5/16		TTR-64-5	9/64-3/16	
						3/16		TTR-64-3	13/64-3/8	

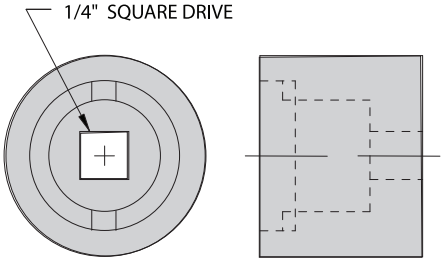

SOCKET-TYPE INSTALLATION TOOLS

PART NO.	FOR INSTALLING RETAINER RINGS		
TTBT-24	TTR-24-3	TTR-24-5	TTR-24-6
TTBT-32	TTR-32-3	TTR-32-5	TTR-32-6
TTBT-40	TTR-40-3	TTR-40-5	TTR-40-6
TTBT-48	TTR-48-3	TTR-48-5	TTR-48-6
TTBT-64	TTR-64-3	TTR-64-5	TTR-64-6

Carr Lane MANUFACTURING CO.
4200 Carr Lane Ct., P.O. Box 191970
St. Louis, Missouri 63119-7970 USA
Phone: 314-647-6200, FAX: 314-647-5736
Web Site: www.carrlane.com

CB CIRCUIT BOARD

APPLICATIONS:
Headless and head-type bushings made especially for circuit-board drilling machines. Available for Electro-Mechano, Excellon, Waco, Digital, Nationwide, Edlund, Tektronix, Leland-Gifford, Palomar, Hughes, Rapidrill, and Reliable drilling machines.

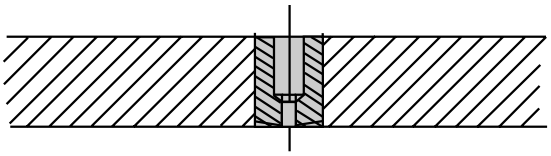

ORDERING EXAMPLES:
CB-1-.1250 Bushing for 1/8" drill

Prices shown here apply to standard bushings only, for a standard drill size within the stated ID range. See back cover.

SPECIALS:
Bushings for other types of circuit-board drilling machines, including Hughes, Rapidrill, and Reliable, are available on request. Please contact factory.

STANDARD ID TOLERANCE:
#80 to 1/4 Nominal +.0001/+.0004

CONCENTRICITY:
ID concentric with OD to within .0005 TIR maximum at drill exit end.

DRILL BEARING LENGTH:
Standard drill bearing length is 1-1/2 times drill size on all types and sizes.

> Great works are performed not by strength but by perseverance.

CB-1
FOR ELECTRO-MECHANO

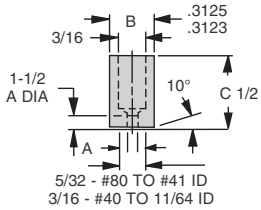

CB-2
FOR EXCELLON AND WACO

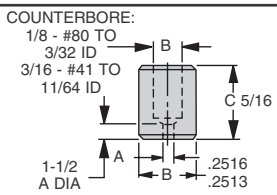

CB-3
FOR DIGITAL

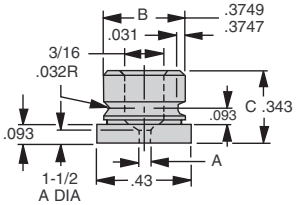

CB-4
FOR NATION-WIDE

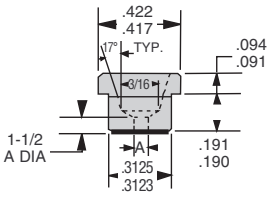

CB-5
FOR EDLUND AND TEKTRONIX

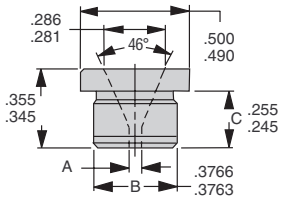

CB-6
FOR LELAND-GIFFORD

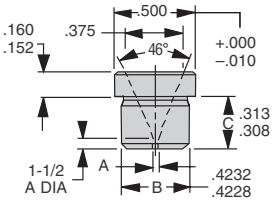

CB-7
FOR PALOMAR

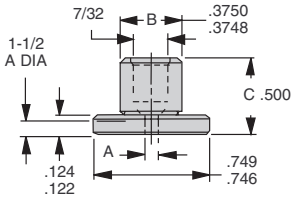

CarrLane MANUFACTURING CO.
4200 Carr Lane Ct., P.O. Box 191970
St. Louis, Missouri 63119-7970 USA
Phone: 314-647-6200, FAX: 314-647-5736
Web Site: www.carrlane.com

CIRCUIT BOARD CB

TYPE	ID RANGE DRILL SIZE "A"		PRICE
CB-1	#80-#78	.0135-.0179	Contact Factory
	#77-#70	.0180-.0291	
	#69-3/64	.0292-.0519	
	#55-1/16	.0520-.0634	
	#52-3/32	.0635-.0959	
	#41-9/64	.0960-.1406	

TYPE	ID RANGE DRILL SIZE "A"		PRICE
CB-2	#80-#79	.0135-.0155	Contact Factory
	1/64-#75	.0156-.0224	
	#74-1/32	.0225-.0319	
	#67-3/64	.0320-.0519	
	#55-#41	.0520-.0979	
	#40-9/64	.0980-.1406	

TYPE	ID RANGE DRILL SIZE "A"		PRICE
CB-3	#80-#78	.0135-.0179	Contact Factory
	#77-#70	.0180-.0291	
	#69-3/64	.0292-.0519	
	#55-1/16	.0520-.0634	
	#52-3/32	.0635-.0959	
	#41-9/64	.0960-.1406	

TYPE	ID RANGE DRILL SIZE "A"		PRICE
CB-4	#80-#78	.0135-.0179	Contact Factory
	#77-#70	.0180-.0291	
	#69-3/64	.0292-.0519	
	#55-1/16	.0520-.0634	
	#52-3/32	.0635-.0959	
	#41-9/64	.0960-.1406	

TYPE	ID RANGE DRILL SIZE "A"		PRICE
CB-5	#80-#78	.0135-.0179	Contact Factory
	#77-#70	.0180-.0291	
	#69-3/64	.0292-.0519	
	#55-1/16	.0520-.0634	
	#52-3/32	.0635-.0959	
	#41-9/64	.0960-.1406	

TYPE	ID RANGE DRILL SIZE "A"		PRICE
CB-6	#80-#78	.0135-.0179	Contact Factory
	#77-#70	.0180-.0291	
	#69-3/64	.0292-.0519	
	#55-1/16	.0520-.0634	
	#52-3/32	.0635-.0959	
	#41-9/64	.0960-.1406	

TYPE	ID RANGE DRILL SIZE "A"		PRICE
CB-7	#80-#78	.0135-.0179	Contact Factory
	#77-#70	.0180-.0291	
	#69-3/64	.0292-.0519	
	#55-1/16	.0520-.0634	
	#52-3/32	.0635-.0959	
	#41-9/64	.0960-.1406	

Carr Lane®
MANUFACTURING CO.
4200 Carr Lane Ct., P.O. Box 191970
St. Louis, Missouri 63119-7970 USA
Phone: 314-647-6200, FAX: 314-647-5736
Web Site: www.carrlane.com

GD GUN DRILL

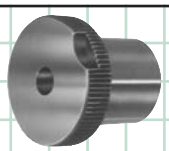

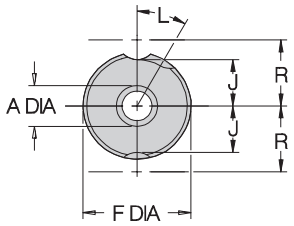

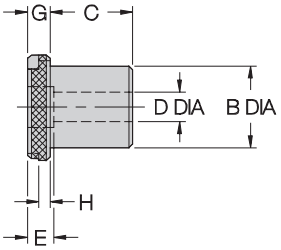

BODY OD	E	F DIA	G	H	J	L	R	LOCK SCREW
1	7/16	1-27/64	3/8	3/16	19/32	35˚	59/64	LS-2
1-3/8	7/16	1-51/64	3/8	3/16	25/32	30˚	1-7/64	LS-2
1-3/4	3/4	2-19/64	3/8	3/16	1	30˚	1-25/64	LS-2

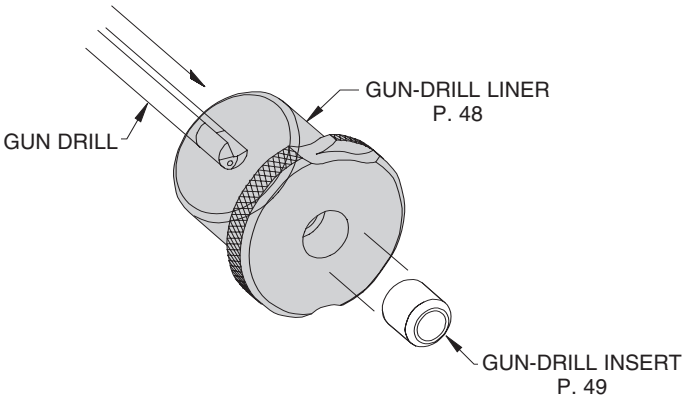

APPLICATIONS:

These bushings are for gun-drilling machines, such as Eldorado, Drillmation, deHoff, and Lahr. Gun-drill bushings are similar to SF renewable bushings, but with the drill bearing at the bushing's head end. Depending on the gun-drilling machine, bushings are either one-piece or two-piece (a liner and an insert).

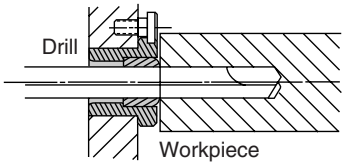

ORDERING EXAMPLE:

GDL-112-28-20 Liner for any insert with a 5/16 OD

Prices shown here apply to standard bushings only, for a standard drill size within the stated ID range. See back cover for decimal equivalents. To price non-standard sizes, see page 7.

STANDARD LINER ID TOLERANCES:

13/64"	+.0014/+.0016
1/4 to 5/16"	+.0015/+.0017
1/2"	+.0016/+.0018
3/4 to 1"	+.0017/+.0019
1-3/8"	+.0021/+.0023

TYPE GDL GUN-DRILL LINER

A ID	B OD	C LGTH	D	PART NO.	PRICE	LOCK SCREW
13/64	1 1.0000-.9998	1	1/8	GDL-64-16-13	Please see our web catalog for pricing.	LS-2
1/4			5/32	GDL-64-16-16		
5/16			7/32	GDL-64-16-20		
1/2			11/32	GDL-64-16-32		
3/4			9/16	GDL-64-16-48		
13/64	1-3/8 1.3750-1.3747	1-3/8	1/8	GDL-88-22-13		LS-2
1/4			5/32	GDL-88-22-16		
5/16			7/32	GDL-88-22-20		
1/2			11/32	GDL-88-22-32		
3/4			9/16	GDL-88-22-48		
1			51/64	GDL-88-22-64		
13/64	1-3/4 1.7500-1.7497	1-3/4	1/8	GDL-112-28-13		LS-2
1/4			5/32	GDL-112-28-16		
5/16			7/32	GDL-112-28-20		
1/2			11/32	GDL-112-28-32		
3/4			9/16	GDL-112-28-48		
1			51/64	GDL-112-28-64		
1-3/8			1-3/64	GDL-112-28-88		

QUANTITY DISCOUNTS

Quantity	1 -5	6 -11	12 -23	24 -49	50 -99	100 -199	200 -499	500 Up
Discount %	Net	18%	29%	34%	42%	48%	50%	52%
Multiplier	1.00	.82	.71	.66	.58	.52	.50	.48

Carr Lane MANUFACTURING CO.
4200 Carr Lane Ct., P.O. Box 191970
St. Louis, Missouri 63119-7970 USA
Phone: 314-647-6200, FAX: 314-647-5736
Web Site: www.carrlane.com

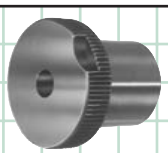

GUN DRILL GD

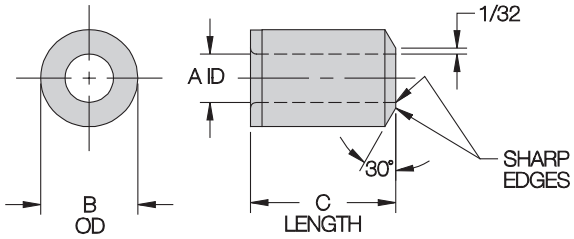

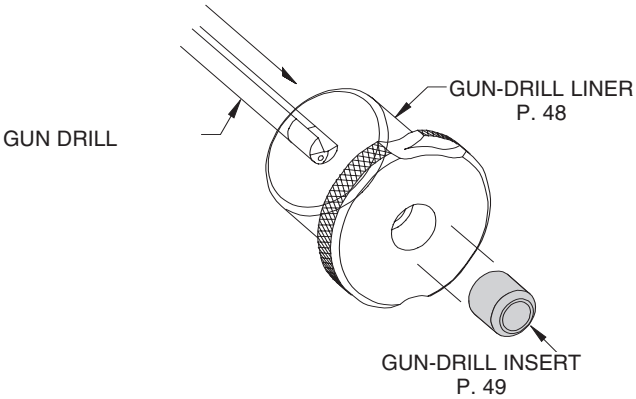

TYPE GDI GUN-DRILL INSERTS

A ID	B OD	C LGTH	PART NO.	PRICE	MATCHING LINER
.0635-.0995 #52-#39 1.65-2.50mm	**13/64** .2046-.2043	1/2	GDI-13-8	Please see our web catalog for pricing.	GDL-64-16-13
		3/4	GDI-13-12		GDL-88-22-13
		1	GDI-13-16		GDL-112-28-13
.0980-.1406 #40-9/64 2.50-3.50mm	**1/4** .2516-.2513	1/2	GDI-16-8		GDL-64-16-16
		3/4	GDI-16-12		GDL-88-22-16
		1	GDI-16-16		GDL-112-28-16
.1250-.1935 1/8-#10 3.20-4.90mm	**5/16** .3141-.3138	1/2	GDI-20-8		GDL-64-16-20
		3/4	GDI-20-12		GDL-88-22-20
		1	GDI-20-16		GDL-112-28-20
.1875-.3160 3/16-O 4.80-8.00mm	**1/2** .5017-.5014	1/2	GDI-32-8		GDL-64-16-32
		3/4	GDI-32-12		GDL-88-22-32
		1	GDI-32-16		GDL-112-28-32
.3125-.5312 5/16-17/32 8.00-13.50mm	**3/4** .7518-.7515	1/2	GDI-48-8		GDL-64-16-48
		3/4	GDI-48-12		GDL-88-22-48
		1	GDI-48-16		GDL-112-28-48
.5000-.7656 1/2-49/64 13.00-19.00mm	**1** 1.0018-1.0015	3/4	GDI-64-12		GDL-88-22-64
		1	GDI-64-16		GDL-112-28-64
.6250-1.0312 5/8–1-1/32 16.00-26.00mm	**1-3/8** 1.3772-1.3768	1	GDI-88-16		GDL-112-28-88

ORDERING EXAMPLES:

GDI-20-16-.1250 — Gun-drill insert for 1-3/4" OD liner GDL-112-28-20, inch ID

GDI-20-16-.1772 — Gun-drill insert for 1-3/4" OD liner GDL-112-28-20, mm ID (.1772 = 4.50mm)

Prices shown here apply to standard bushings only, for a standard drill size within a stated ID range. See back cover for decimal equivalents. To price non-standard sizes, see page 7.

STANDARD ID TOLERANCES:

#52 to 1-1/32" -.0000/+.0002 | 1.65 to 26mm -.000/+.005mm

QUANTITY DISCOUNTS

Quantity	1 -5	6 -11	12 -23	24 -49	50 -99	100 -199	200 -499	500 Up
Discount %	Net	18%	29%	34%	42%	48%	50%	52%
Multiplier	1.00	.82	.71	.66	.58	.52	.50	.48

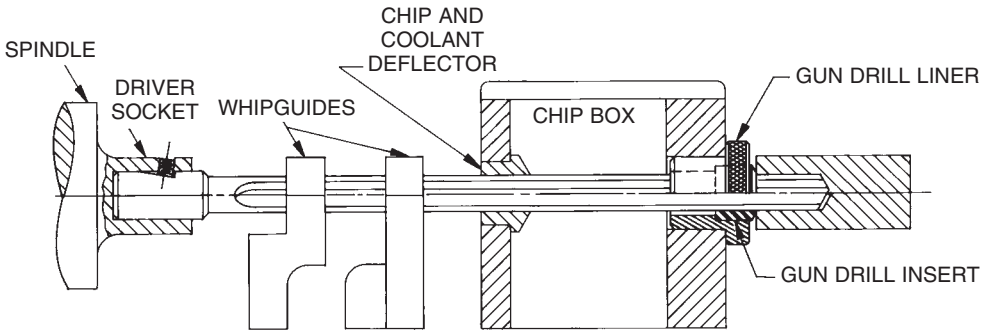

Carr Lane MANUFACTURING CO.
4200 Carr Lane Ct., P.O. Box 191970
St. Louis, Missouri 63119-7970 USA
Phone: 314-647-6200, FAX: 314-647-5736
Web Site: www.carrlane.com

GD GUN DRILL

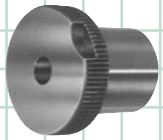

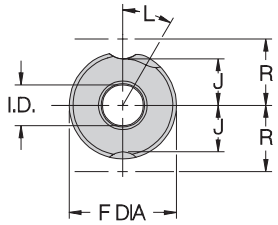

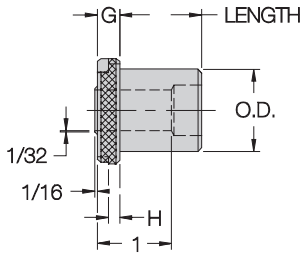

BODY OD	F DIA	G	H	J	L	R
1	1-27/64	3/8	3/16	19/32	35˚	59/64
1-3/8	1-51/64	3/8	3/16	25/32	30˚	1-7/64

ORDERING EXAMPLES:

GDE-64-12-.1250 Standard gun-drill bushing, inch ID
GDE-64-12-.1772 Standard gun-drill bushing, mm ID (.1772 = 4.50mm)

STANDARD ID TOLERANCES:

1/8 to 1-1/16" -.0000/+.0002 | 3 to 27mm -.000/+.005mm

TYPE GDE
ONE-PIECE ELDORADO TYPE

ID RANGE	OD	LENGTH	PART NO.	PRICE 1-5	LOCK SCREW
.1250-.7812 1/8-25/32 3.20-19.50mm	**1** 1.0000-.9998	3/4	GDE-64-12	Please see our web catalog for pricing.	LS-2
		1	GDE-64-16		
		1-3/8	GDE-64-22		
.1250-1.0625 1/8-1-1/16 3.20-27.00mm	**1-3/8** 1.3750-1.3747	1	GDE-88-16		LS-2
		1-3/8	GDE-88-22		

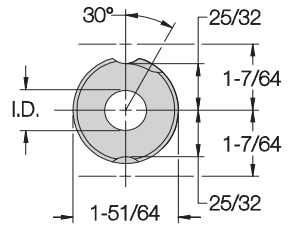

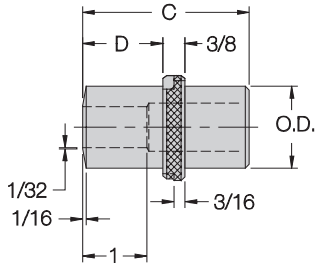

ORDERING EXAMPLES:

GDD-88-30-.1250 Standard gun-drill bushing, inch ID
GDD-88-30-.1772 Standard gun-drill bushing, mm ID (.1772 = 4.50mm)

STANDARD ID TOLERANCES:

1/8 to 1-1/16" -.0000/+.0002 | 3 to 27mm -.000/+.005mm

TYPE GDD
ONE-PIECE ELDORADO DEEP TYPE

ID RANGE	OD	C LGTH.	D EXT.	PART NO.	PRICE 1-5	LOCK SCREW
.1250-1.0625 1/8-1-1/16 3.20-27.00mm	**1-3/8** 1.3750-1.3747	1-7/8	1/2	GDD-88-30	Please see our web catalog for pricing.	LS-2
		2-3/8	1	GDD-88-38		
		2-7/8	1-1/2	GDD-88-46		
		3-3/8	2	GDD-88-54		

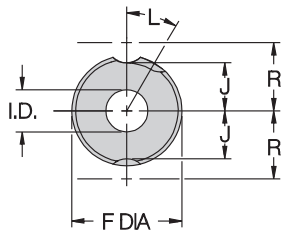

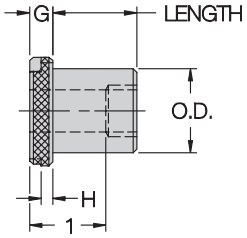

BODY OD	F DIA	G	H	J	L	R
1	1-27/64	3/8	3/16	19/32	35˚	59/64
1-3/8	1-51/64	3/8	3/16	25/32	30˚	1-7/64

ORDERING EXAMPLES:

GDH-64-12-.1250 Standard gun-drill bushing, inch ID
GDH-64-12-.1772 Standard gun-drill bushing, mm ID (.1772 = 4.50mm)

STANDARD ID TOLERANCES:

1/8 to 1-1/16" -.0000/+.0002 | 3 to 27mm -.000/+.005mm

TYPE GDH
ONE-PIECE DEHOFF TYPE

ID RANGE	OD	LENGTH	PART NO.	PRICE 1-5	LOCK SCREW
.1250-.7812 1/8-25/32 3.20-19.50mm	**1** 1.0000-.9998	3/4	GDH-64-12	Please see our web catalog for pricing.	LS-2
		1	GDH-64-16		
		1-3/8	GDH-64-22		
.1250-1.0625 1/8-1-1/16 3.20-27.00mm	**1-3/8** 1.3750-1.3747	1	GDH-88-16		LS-2
		1-3/8	GDH-88-22		

QUANTITY DISCOUNTS FOR ABOVE TYPES

Prices shown here apply to standard bushings only, for a standard drill size within the stated ID range. See back cover for decimal equivalents. To price non-standard sizes, see page 7.

QUANTITY DISCOUNTS

Quantity	1 -5	6 -11	12 -23	24 -49	50 -99	100 -199	200 -499	500 Up
Discount %	Net	18%	29%	34%	42%	48%	50%	52%
Multiplier	1.00	.82	.71	.66	.58	.52	.50	.48

CarrLane® MANUFACTURING CO.
4200 Carr Lane Ct., P.O. Box 191970
St. Louis, Missouri 63119-7970 USA
Phone: 314-647-6200, FAX: 314-647-5736
Web Site: www.carrlane.com

A AIR FEED

ADAPTOR TIP ASSEMBLY

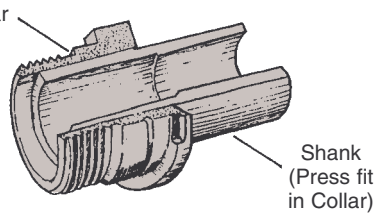

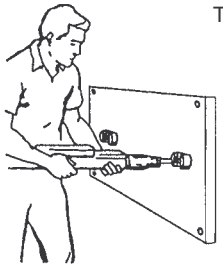

To mount air-feed drill, insert in liner and turn 30° counterclockwise to lock.

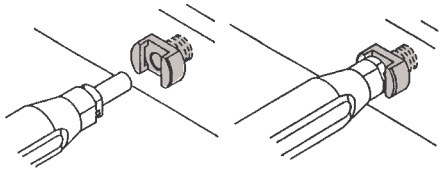

STANDARD AIR-FEED DRILLS

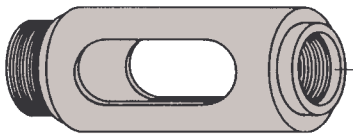

AIR-FEED-DRILL NOSEPIECE

REDUCER (optional) p. 68

COLLAR p. 59-67

AT-TYPE ADAPTOR TIP p. 68

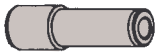

SHANK p. 59-67

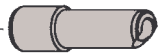

CONTOUR-NOSE SHANK p. 58

COOLANT-TYPE AIR-FEED DRILLS

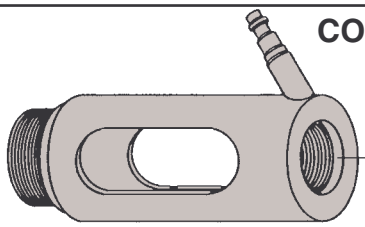

COOLANT-TYPE AIR-FEED-DRILL NOSEPIECE

COOLANT REDUCER (optional) p. 68

COOLANT COLLAR p. 59-67

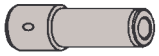

COOLANT SHANK p. 59-67

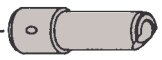

COOLANT-NOSE COOLANT SHANK p. 58

MOUNTING OPTIONS

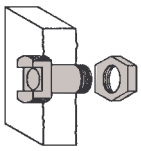

TAPER-LOK® LINERS p. 69

New-design one-piece lock liner has angular locking surfaces for superior strength. Allows very close hole spacing. Hold in place with a lock nut. Also available knurled for installing in plastic tooling.

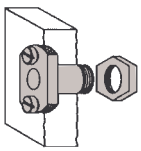

LOCK LINERS p. 69

Conventional lock liner incorporating two lock screws. Hold in place with a lock nut.

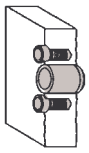

TAPER-LOK® AIR-FEED LOCKSCREWS p. 71

New-design lock screw especially for air-feed drills. Angular locking surface for superior strength. Install two lock screws and a liner directly in jig plate.

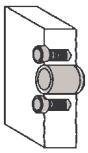

LOCKSCREWS p. 71

Conventional-style lock screws. Install two lock screws and a liner bushing directly in jig plate.

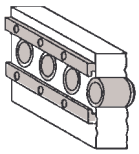

LOCK STRIPS p. 71

Allows the closest possible hole spacing. Use together with liner bushings.

Carr Lane® MANUFACTURING CO.
4200 Carr Lane Ct., P.O. Box 191970
St. Louis, Missouri 63119-7970 USA
Phone: 314-647-6200, FAX: 314-647-5736
Web Site: www.carrlane.com

AIR FEED

A

APPLICATIONS:

Drill-bushing shanks, collars, adaptors, and locking accessories for air-feed drills, tappers, and back-spotfacers. Available for all standard drill motors, including Gardner-Denver, Keller, Aro, Buckeye, Quackenbush, Desoutter, and Ingersoll-Rand.

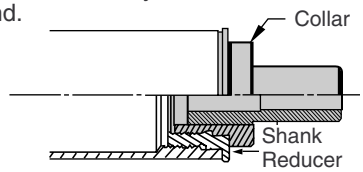

CONSTRUCTION:

Adaptor-tip assemblies consist of two pieces: a locking collar and a pressed-in shank. The collar screws into the air-feed-drill nosepiece, precisely aligns the shank, and locks the drill in place by rotating 30˚ counterclockwise after mounting. Shanks and collars can be ordered separately for replacement purposes.

ORDERING EXAMPLES:

A-21101-.1250	Complete adaptor-tip assembly
21101-.1250	Shank only
21000	Collar only
A-21101-.1250-C	Complete assembly with contour nose
21101-.1250-C	Shank only, with contour nose
A-11101-.1250	Coolant-type assembly
A-11101-.1250-C	Coolant-type assembly with contour nose

Prices shown here apply to standard bushings only, for a standard drill size within the stated ID range. See back cover for decimal equivalents. To price non-standard sizes, see page 7. All prices are net — no quantity discount.

STANDARD ID TOLERANCES:

From #70 to 1/4"	+.0001/+.0004	From 1 to 3mm	+.002/+.008mm
Over 1/4 to 3/4"	+.0001/+.0005	Over 3 to 6mm	+.004/+.012mm
Over 3/4 to 1-1/2"	+.0002/+.0006	Over 6 to 10mm	+.005/+.014mm
		Over 10 to 18mm	+.006/+.017mm
AT-Type	+.0000/+.0003	Over 18 to 30mm	+.007/+.020mm

(See page 9 for reamer ID tolerances.)

OPTIONAL COOLANT TYPE:

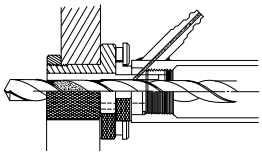

For coolant-inducing air-feed drills. Special shanks, collars, and reducers with internal coolant passages. Contact factory for pricing.

OPTIONAL CONTOUR NOSE:

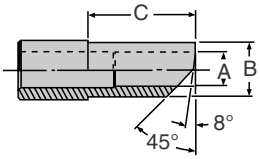

Angular-nose shank recommended for close drilling along sloped or curved surfaces. Available on standard and coolant-type shanks. To order, add "-C" suffix to part number. Contact factory for pricing.

ADAPTOR TIP ASSEMBLIES

21000 SERIES

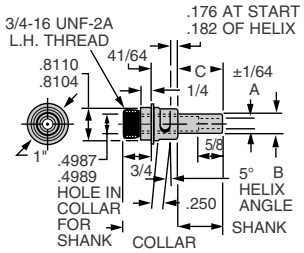

22000 SERIES

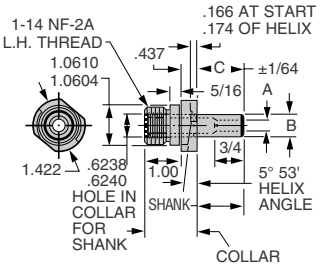

23000 SERIES

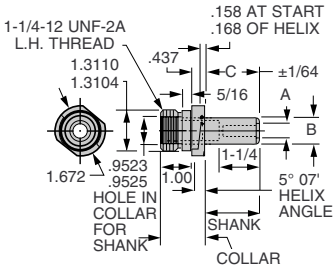

24000 SERIES

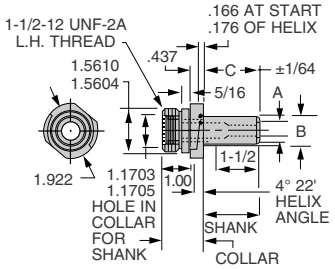

25000 SERIES

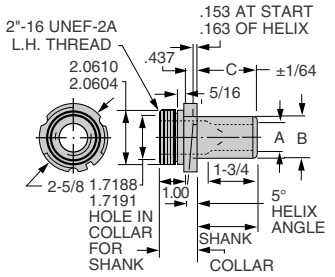

Carr Lane MANUFACTURING CO.
4200 Carr Lane Ct., P.O. Box 191970
St. Louis, Missouri 63119-7970 USA
Phone: 314-647-6200, FAX: 314-647-5736
Web Site: www.carrlane.com

A AIR FEED

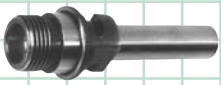

21000 SERIES

A ID RANGE	B OD	C LENGTH	TIP ASSEMBLY STANDARD TYPE PART NO.	TIP ASSEMBLY COOLANT TYPE PART NO.	TIP ASSEMBLY STANDARD TYPE PRICE*	SHANK ONLY STANDARD TYPE PART NO.	SHANK ONLY COOLANT TYPE PART NO.	SHANK ONLY STANDARD TYPE PRICE*	COLLAR ONLY STANDARD TYPE PART NO.	COLLAR ONLY COOLANT TYPE PART NO.	COLLAR ONLY STANDARD TYPE PRICE*	TAPER-LOK® LINER PART NO. p. 69	LOCK LINER PART NO. p. 69	LOCK NUT PART NO. p. 69	TAPER-LOK® LOCKSCREW PART NO. p. 71	LOCK SCREW PART NO. p. 71	LINER PART NO. p. 71
.0938-.2500 3/32-1/4 2.40-6.35mm	3/8 .3748-.3745	3/8	A-21101	A-11101	Please see our web catalog for pricing.	21101	11101	Please see our web catalog for pricing.	21000	11000	Please see our web catalog for pricing.	TLL-16520 (Matches A-21106 tip)	A-16520 (Matches A-16500 tip)	14441	CL-11-AFL or CL-13-AFL or CL-14-AFL	16531	19936
		1/2	A-21102	A-11102		21102	11102										
		5/8	A-21103	A-11103		21103	11103										
		3/4	A-21104	A-11104		21104	11104										
		7/8	A-21105	A-11105		21105	11105										
		1	A-21106	A-11106		21106	11106										
		1-1/16	A-16500	A-11107		16500	11107										
		1-1/8	A-21108	A-11108		21108	11108										
		1-1/4	A-21110	A-11110		21110	11110										
		1-3/8	A-21111	A-11111		21111	11111										
		1-1/2	A-21113	A-11113		21113	11113										
		1-5/8	A-21114	A-11114		21114	11114										
		1-3/4	A-21115	A-11115		21115	11115										
		1-7/8	A-21116	A-11116		21116	11116										
		2	A-21118	A-11118		21118	11118										
		2-1/8	A-21119	A-11119		21119	11119										
		2-1/4	A-21120	A-11120		21120	11120										
		2-3/8	A-21121	A-11121		21121	11121										
		2-1/2	A-21122	A-11122		21122	11122										
		2-3/4	A-21124	A-11124		21124	11124										
		3	A-21125	A-11125		21125	11125										
		3-1/4	A-21126	A-11126		21126	11126										
		6	A-21131	A-11131		21131	11131										
.0938-.3125 3/32-5/16 2.40-7.90mm	7/16 .4373-.4370	1/2	A-21202	A-11202		21202	11202										19937
		5/8	A-21203	A-11203		21203	11203										
		3/4	A-21204	A-11204		21204	11204										
		7/8	A-21205	A-11205		21205	11205										
		1	A-21206	A-11206		21206	11206										
		1-1/8	A-21208	A-11208		21208	11208										
		1-1/4	A-21210	A-11210		21210	11210										
		1-3/8	A-21211	A-11211		21211	11211										
		1-1/2	A-21213	A-11213		21213	11213										
		1-5/8	A-21214	A-11214		21214	11214										
		1-3/4	A-21215	A-11215		21215	11215										
		1-7/8	A-21216	A-11216		21216	11216										
		2	A-21218	A-11218		21218	11218										
		2-1/8	A-21219	A-11219		21219	11219										
		2-1/4	A-21220	A-11220		21220	11220										
		2-3/8	A-21221	A-11221		21221	11221										
		2-1/2	A-21222	A-11222		21222	11222										
		2-3/4	A-21224	A-11224		21224	11224										
		3	A-21225	A-11225		21225	11225										
		3-1/4	A-21226	A-11226		21226	11226										
.0938-.3750 3/32-3/8 2.40-9.50mm	1/2 .4998-.4995	3/8	A-21301	A-11301		21301	11301					TLL-16521 (Matches A-21306 tip)	A-16521 (Matches A-16501 tip)	14442			19938
		1/2	A-21302	A-11302		21302	11302										
		5/8	A-21303	A-11303		21303	11303										
		3/4	A-21304	A-11304		21304	11304										
		7/8	A-21305	A-11305		21305	11305										
		1	A-21306	A-11306		21306	11306										
		1-1/16	A-16501	A-11307		16501	11307										
		1-1/8	A-21308	A-11308		21308	11308										
		1-1/4	A-21310	A-11310		21310	11310										
		1-3/8	A-21311	A-11311		21311	11311										
		1-1/2	A-21313	A-11313		21313	11313										
		1-5/8	A-21314	A-11314		21314	11314										
		1-3/4	A-21315	A-11315		21315	11315										
		1-7/8	A-21316	A-11316		21316	11316										
		2	A-21318	A-11318		21318	11318										
		2-1/8	A-21319	A-11319		21319	11319										
		2-1/4	A-21320	A-11320		21320	11320										
		2-3/8	A-21321	A-11321		21321	11321										
		2-1/2	A-21322	A-11322		21322	11322										
		2-3/4	A-21324	A-11324		21324	11324										
		3	A-21325	A-11325		21325	11325										
		3-1/4	A-21326	A-11326		21326	11326										
		5	A-21330	A-11330		21330	11330										

* Contact factory for pricing on coolant type.

Carr Lane MANUFACTURING CO.
4200 Carr Lane Ct., P.O. Box 191970
St. Louis, Missouri 63119-7970 USA
Phone: 314-647-6200, FAX: 314-647-5736
Web Site: www.carrlane.com

22000 SERIES

A ID RANGE	B OD	C LENGTH	TIP ASSEMBLY STANDARD TYPE PART NO.	TIP ASSEMBLY COOLANT TYPE PART NO.	TIP ASSEMBLY STANDARD TYPE PRICE*	SHANK ONLY STANDARD TYPE PART NO.	SHANK ONLY COOLANT TYPE PART NO.	SHANK ONLY STANDARD TYPE PRICE*	COLLAR ONLY STANDARD TYPE PART NO.	COLLAR ONLY COOLANT TYPE PART NO.	COLLAR ONLY STANDARD TYPE PRICE*	TAPER-LOK® LINER PART NO. p. 69	LOCK LINER PART NO. p. 69	LOCK NUT PART NO. p. 69	TAPER-LOK® LOCKSCREW PART NO. p. 71	LOCK SCREW PART NO. p. 71	LINER PART NO. p. 71
.1875-.2812 3/16-9/32 4.80-7.10mm	**7/16** .4373-.4370	3/8	A-22101	A-12101	Please see our web catalog for pricing.	22101	12101	Please see our web catalog for pricing.	22000	12000	Please see our web catalog for pricing.				CL-11-AFL or CL-13-AFL or CL-14-AFL	16532	19937
		1/2	A-22102	A-12102		22102	12102										
		5/8	A-22103	A-12103		22103	12103										
		3/4	A-22104	A-12104		22104	12104										
		7/8	A-22105	A-12105		22105	12105										
		1	A-22106	A-12106		22106	12106										
		1-1/8	A-22108	A-12108		22108	12108										
		1-1/4	A-22110	A-12110		22110	12110										
		1-3/8	A-22111	A-12111		22111	12111										
		1-1/2	A-22113	A-12113		22113	12113										
		1-5/8	A-22114	A-12114		22114	12114										
		1-3/4	A-22115	A-12115		22115	12115										
		1-7/8	A-22116	A-12116		22116	12116										
		2	A-22118	A-12118		22118	12118										
		2-1/8	A-22119	A-12119		22119	12119										
		2-1/4	A-22120	A-12120		22120	12120										
		2-3/8	A-22121	A-12121		22121	12121										
		2-1/2	A-22122	A-12122		22122	12122										
		2-3/4	A-22124	A-12124		22124	12124										
		3	A-22125	A-12125		22125	12125										
		3-1/4	A-22126	A-12126		22126	12126										
		3-1/2	A-22127	A-12127		22127	12127										
		3-3/4	A-22128	A-12128		22128	12128										
		4	A-22129	A-12129		22129	12129										
		5	A-22130	A-12130		22130	12130										
		6	A-22131	A-12131		22131	12131										
.1875-.3438 3/16-11/32 4.80-8.70mm	**1/2** .4998-.4995	1/2	A-22202	A-12202		22202	12202										19938
		5/8	A-22203	A-12203		22203	12203										
		3/4	A-22204	A-12204		22204	12204										
		7/8	A-22205	A-12205		22205	12205										
		1	A-22206	A-12206		22206	12206										
		1-1/8	A-22208	A-12208		22208	12208										
		1-1/4	A-22210	A-12210		22210	12210										
		1-3/8	A-22211	A-12211		22211	12211										
		1-1/2	A-22213	A-12213		22213	12213										
		1-5/8	A-22214	A-12214		22214	12214										
		1-3/4	A-22215	A-12215		22215	12215										
		1-7/8	A-22216	A-12216		22216	12216										
		2	A-22218	A-12218		22218	12218										
		2-1/8	A-22219	A-12219		22219	12219										
		2-1/4	A-22220	A-12220		22220	12220										
		2-3/8	A-22221	A-12221		22221	12221										
		2-1/2	A-22222	A-12222		22222	12222										
		2-3/4	A-22224	A-12224		22224	12224										
		3	A-22225	A-12225		22225	12225										
		3-1/4	A-22226	A-12226		22226	12226										
		3-1/2	A-22227	A-12227		22227	12227										
		3-3/4	A-22228	A-12228		22228	12228										
		4	A-22229	A-12229		22229	12229										
		5	A-22230	A-12230		22230	12230										
		6	A-22231	A-12231		22231	12231										
.1875-.4062 3/16-13/32 4.80-10.20mm	**9/16** .5623-.5620	5/8	A-22303	A-12303		22303	12303										19939
		3/4	A-22304	A-12304		22304	12304										
		7/8	A-22305	A-12305		22305	12305										
		1	A-22306	A-12306		22306	12306										
		1-1/8	A-22308	A-12308		22308	12308										
		1-1/4	A-22310	A-12310		22310	12310										
		1-3/8	A-22311	A-12311		22311	12311										
		1-1/2	A-22313	A-12313		22313	12313										
		1-5/8	A-22314	A-12314		22314	12314										
		1-3/4	A-22315	A-12315		22315	12315										
		1-7/8	A-22316	A-12316		22316	12316										

CONTINUED ON NEXT PAGE.

* Contact factory for pricing on coolant type.

Carr Lane® MANUFACTURING CO.
4200 Carr Lane Ct., P.O. Box 191970
St. Louis, Missouri 63119-7970 USA
Phone: 314-647-6200, FAX: 314-647-5736
Web Site: www.carrlane.com

22000 SERIES (CONT.)

A ID RANGE	B OD	C LENGTH	TIP ASSEMBLY STANDARD TYPE PART NO.	TIP ASSEMBLY COOLANT TYPE PART NO.	TIP ASSEMBLY STANDARD TYPE PRICE*	SHANK ONLY STANDARD TYPE PART NO.	SHANK ONLY COOLANT TYPE PART NO.	SHANK ONLY STANDARD TYPE PRICE*	COLLAR ONLY STANDARD TYPE PART NO.	COLLAR ONLY COOLANT TYPE PART NO.	COLLAR ONLY STANDARD TYPE PRICE*	TAPER-LOK® LINER PART NO. p. 69	LOCK LINER PART NO. p. 69	LOCK NUT PART NO. p. 69	TAPER-LOK® LOCKSCREW PART NO. p. 71	LOCK SCREW PART NO. p. 71	LINER PART NO. p. 71
		CONTINUED FROM PRECEDING PAGE.															
.1875-.4062 3/16-13/32 4.80-10.20mm	9/16 .5623-.5620	2	A-22318	A-12318	Please see our web catalog for pricing.	22318	12318	Please see our web catalog for pricing.	22000	12000	Please see our web catalog for pricing.				CL-11-AFL or CL-13-AFL or CL-14-AFL	16532	19939
		2-1/8	A-22319	A-12319		22319	12319										
		2-1/4	A-22320	A-12320		22320	12320										
		2-3/8	A-22321	A-12321		22321	12321										
		2-1/2	A-22322	A-12322		22322	12322										
		2-3/4	A-22324	A-12324		22324	12324										
		3	A-22325	A-12325		22325	12325										
		3-1/4	A-22326	A-12326		22326	12326										
		3-1/2	A-22327	A-12327		22327	12327										
		3-3/4	A-22328	A-12328		22328	12328										
		4	A-22329	A-12329		22329	12329										
		5	A-22330	A-12330		22330	12330										
		6	A-22331	A-12331		22331	12331										
.1875-.4688 3/16-15/32 4.80-11.80mm	5/8 .6248-.6245	3/8	A-22401	A-12401		22401	12401					TLL-16522 (Matches A-22406 Tip)	A-16522 (Matches A-16502 Tip)	14443			19940
		1/2	A-22402	A-12402		22402	12402										
		5/8	A-22403	A-12403		22403	12403										
		3/4	A-22404	A-12404		22404	12404										
		7/8	A-22405	A-12405		22405	12405										
		1	A-22406	A-12406		22406	12406										
		1-1/8	A-22408	A-12408		22408	12408										
		1-3/16	A-16502	A-12409		16502	12409										
		1-1/4	A-22410	A-12410		22410	12410										
		1-3/8	A-22411	A-12411		22411	12411										
		1-1/2	A-22413	A-12413		22413	12413										
		1-5/8	A-22414	A-12414		22414	12414										
		1-3/4	A-22415	A-12415		22415	12415										
		1-7/8	A-22416	A-12416		22416	12416										
		2	A-22418	A-12418		22418	12418										
		2-1/8	A-22419	A-12419		22419	12419										
		2-1/4	A-22420	A-12420		22420	12420										
		2-3/8	A-22421	A-12421		22421	12421										
		2-1/2	A-22422	A-12422		22422	12422										
		2-3/4	A-22424	A-12424		22424	12424										
		3	A-22425	A-12425		22425	12425										
		3-1/4	A-22426	A-12426		22426	12426										
		3-1/2	A-22427	A-12427		22427	12427										
		3-3/4	A-22428	A-12428		22428	12428										
		4	A-22429	A-12429		22429	12429										
		5	A-22430	A-12430		22430	12430										
		6	A-22431	A-12431		22431	12431										
.1875-.4688 3/16-15/32 4.80-11.80mm	3/4 .7498-.7495	3/4	A-22504	A-12504		22504	12504										19941
		7/8	A-22505	A-12505		22505	12505										
		1	A-22506	A-12506		22506	12506										
		1-1/8	A-22508	A-12508		22508	12508										
		1-1/4	A-22510	A-12510		22510	12510										
		1-3/8	A-22511	A-12511		22511	12511										
		1-1/2	A-22513	A-12513		22513	12513										
		1-5/8	A-22514	A-12514		22514	12514										
		1-3/4	A-22515	A-12515		22515	12515										
		1-7/8	A-22516	A-12516		22516	12516										
		2	A-22518	A-12518		22518	12518										
		2-1/8	A-22519	A-12519		22519	12519										
		2-1/4	A-22520	A-12520		22520	12520										
		2-3/8	A-22521	A-12521		22521	12521										
		2-1/2	A-22522	A-12522		22522	12522										
		2-3/4	A-22524	A-12524		22524	12524										
		3	A-22525	A-12525		22525	12525										
		3-1/4	A-22526	A-12526		22526	12526										
		3-1/2	A-22527	A-12527		22527	12527										
		3-3/4	A-22528	A-12528		22528	12528										
		4	A-22529	A-12529		22529	12529										
		5	A-22530	A-12530		22530	12530										
		6	A-22531	A-12531		22531	12531										

16.98

* Contact factory for pricing on coolant type.

Carr Lane MANUFACTURING CO.
4200 Carr Lane Ct., P.O. Box 191970
St. Louis, Missouri 63119-7970 USA
Phone: 314-647-6200, FAX: 314-647-5736
Web Site: www.carrlane.com

AIR FEED

A

> **The best thing about the future is that it comes only one day at a time.**
>
> Abraham Lincoln

23000 SERIES

A ID RANGE	B OD	C LENGTH	TIP ASSEMBLY STANDARD TYPE PART NO.	TIP ASSEMBLY COOLANT TYPE PART NO.	TIP ASSEMBLY STANDARD TYPE PRICE*	SHANK ONLY STANDARD TYPE PART NO.	SHANK ONLY COOLANT TYPE PART NO.	SHANK ONLY STANDARD TYPE PRICE*	COLLAR ONLY STANDARD TYPE PART NO.	COLLAR ONLY COOLANT TYPE PART NO.	COLLAR ONLY STANDARD TYPE PRICE*	TAPER-LOK® LINER PART NO. p. 69	LOCK LINER PART NO. p. 69	LOCK NUT PART NO. p. 69	TAPER-LOK® LOCKSCREW PART NO. p. 71	LOCK SCREW PART NO. p. 71	LINER PART NO. p. 71
.2500-.5312 1/4-17/32 6.30-13.50mm	**3/4** .7498-.7495	3/4	A-23104	A-13104	Please see our web catalog for pricing.	23104	13104	Please see our web catalog for pricing.	23000	13000	Please see our web catalog for pricing.				CL-11-AFL or CL-13-AFL or CL-14-AFL	16532	19942
		7/8	A-23105	A-13105		23105	13105										
		1	A-23106	A-13106		23106	13106										
		1-1/8	A-23108	A-13108		23108	13108										
		1-1/4	A-23110	A-13110		23110	13110										
		1-3/8	A-23111	A-13111		23111	13111										
		1-1/2	A-23113	A-13113		23113	13113										
		1-5/8	A-23114	A-13114		23114	13114										
		1-3/4	A-23115	A-13115		23115	13115										
		1-7/8	A-23116	A-13116		23116	13116										
		2	A-23118	A-13118		23118	13118										
		2-1/8	A-23119	A-13119		23119	13119										
		2-1/4	A-23120	A-13120		23120	13120										
		2-3/8	A-23121	A-13121		23121	13121										
		2-1/2	A-23122	A-13122		23122	13122										
		2-3/4	A-23124	A-13124		23124	13124										
		3	A-23125	A-13125		23125	13125										
		3-1/4	A-23126	A-13126		23126	13126										
		3-1/2	A-23127	A-13127		23127	13127										
		3-3/4	A-23128	A-13128		23128	13128										
		4	A-23129	A-13129		23129	13129										
		5	A-23130	A-13130		23130	13130										
		6	A-23131	A-13131		23131	13131										
.2500-.5938 1/4-19/32 6.30-15.00mm	**13/16** .8123-.8120	3/4	A-23204	A-13204		23204	13204										19943
		7/8	A-23205	A-13205		23205	13205										
		1	A-23206	A-13206		23206	13206										
		1-1/8	A-23208	A-13208		23208	13208										
		1-1/4	A-23210	A-13210		23210	13210										
		1-3/8	A-23211	A-13211		23211	13211										
		1-1/2	A-23213	A-13213		23213	13213										
		1-5/8	A-23214	A-13214		23214	13214										
		1-3/4	A-23215	A-13215		23215	13215										
		1-7/8	A-23216	A-13216		23216	13216										
		2	A-23218	A-13218		23218	13218										
		2-1/8	A-23219	A-13219		23219	13219										
		2-1/4	A-23220	A-13220		23220	13220										
		2-3/8	A-23221	A-13221		23221	13221										
		2-1/2	A-23222	A-13222		23222	13222										
		2-3/4	A-23224	A-13224		23224	13224										
		3	A-23225	A-13225		23225	13225										
		3-1/4	A-23226	A-13226		23226	13226										
		3-1/2	A-23227	A-13227		23227	13227										
		3-3/4	A-23228	A-13228		23228	13228										
		4	A-23229	A-13229		23229	13229										
		5	A-23230	A-13230		23230	13230										
		6	A-23231	A-13231		23231	13231										

* Contact factory for pricing on coolant type.

Carr Lane® MANUFACTURING CO.
4200 Carr Lane Ct., P.O. Box 191970
St. Louis, Missouri 63119-7970 USA
Phone: 314-647-6200, FAX: 314-647-5736
Web Site: www.carrlane.com

A AIR FEED

23000 SERIES (CONT.)

A ID RANGE	B OD	C LENGTH	TIP ASSEMBLY STANDARD TYPE PART NO.	TIP ASSEMBLY COOLANT TYPE PART NO.	TIP ASSEMBLY STANDARD TYPE PRICE*	SHANK ONLY STANDARD TYPE PART NO.	SHANK ONLY COOLANT TYPE PART NO.	SHANK ONLY STANDARD TYPE PRICE*	COLLAR ONLY STANDARD TYPE PART NO.	COLLAR ONLY COOLANT TYPE PART NO.	COLLAR ONLY STANDARD TYPE PRICE*	TAPER-LOK® LINER PART NO. p. 69	LOCK LINER PART NO. p. 69	LOCK NUT PART NO. p. 69	TAPER-LOK® LOCKSCREW PART NO. p. 71	LOCK SCREW PART NO. p. 71	LINER PART NO. p. 71
.2500-.6562 1/4-21/32 6.30-16.50mm	**7/8** .8748-.8745	3/4	A-23304	A-13304	Please see our web catalog for pricing.	23304	13304	Please see our web catalog for pricing.	23000	13000	Please see our web catalog for pricing.	TLL-16523 (Matches A-23310 Tip)	A-16523 (Matches A-16504 Tip)	14445	CL-11-AFL or CL-13-AFL or CL-14-AFL	16532	19944
		7/8	A-23305	A-13305		23305	13305										
		1	A-23306	A-13306		23306	13306										
		1-1/8	A-23308	A-13308		23308	13308										
		1-1/4	A-23310	A-13310		23310	13310										
		1-3/8	A-23311	A-13311		23311	13311										
		1-7/16	A-16503	A-13312		16503	13312										
		1-1/2	A-23313	A-13313		23313	13313										
		1-5/8	A-23314	A-13314		23314	13314										
		1-3/4	A-23315	A-13315		23315	13315										
		1-7/8	A-23316	A-13316		23316	13316										
		2	A-23318	A-13318		23318	13318										
		2-1/8	A-23319	A-13319		23319	13319										
		2-1/4	A-23320	A-13320		23320	13320										
		2-3/8	A-23321	A-13321		23321	13321										
		2-1/2	A-23322	A-13322		23322	13322										
		2-3/4	A-23324	A-13324		23324	13324										
		3	A-23325	A-13325		23325	13325										
		3-1/4	A-23326	A-13326		23326	13326										
		3-1/2	A-23327	A-13327		23327	13327										
		3-3/4	A-23328	A-13328		23328	13328										
		4	A-23329	A-13329		23329	13329										
		5	A-23330	A-13330		23330	13330										
		6	A-23331	A-13331		23331	13331										
.2500-.7188 1/4-23/32 6.30-18.00mm	**1** .9998-.9995	1	A-23406	A-13406		23406	13406										19945
		1-1/8	A-23408	A-13408		23408	13408										
		1-1/4	A-23410	A-13410		23410	13410										
		1-3/8	A-23411	A-13411		23411	13411										
		1-1/2	A-23413	A-13413		23413	13413										
		1-5/8	A-23414	A-13414		23414	13414										
		1-3/4	A-23415	A-13415		23415	13415										
		1-7/8	A-23416	A-13416		23416	13416										
		2	A-23418	A-13418		23418	13418										
		2-1/8	A-23419	A-13419		23419	13419										
		2-1/4	A-23420	A-13420		23420	13420										
		2-3/8	A-23421	A-13421		23421	13421										
		2-1/2	A-23422	A-13422		23422	13422										
		2-3/4	A-23424	A-13424		23424	13424										
		3	A-23425	A-13425		23425	13425										
		3-1/4	A-23426	A-13426		23426	13426										
		3-1/2	A-23427	A-13427		23427	13427										
		3-3/4	A-23428	A-13428		23428	13428										
		4	A-23429	A-13429		23429	13429										
		5	A-23430	A-13430		23430	13430										
		6	A-23431	A-13431		23431	13431										
.2500-.7188 5/16-23/32 6.30-18.00mm	**1-1/8** 1.1248-1.1245	1	A-23506	A-13506		23506	13506					TTL-16524 (Matches A-23515 Tip)	A-16524 (Matches A-16504 Tip)	14446			19946
		1-1/8	A-23508	A-13508		23508	13508										
		1-1/4	A-23510	A-13510		23510	13510										
		1-3/8	A-23511	A-13511		23511	13511										
		1-1/2	A-23513	A-13513		23513	13513										
		1-5/8	A-23514	A-13514		23514	13514										
		1-3/4	A-23515	A-13515		23515	13515										
		1-7/8	A-23516	A-13516		23516	13516										
		1-15/16	A-16504	A-13517		16504	13517										
		2	A-23518	A-13518		23518	13518										
		2-1/8	A-23519	A-13519		23519	13519										
		2-1/4	A-23520	A-13520		23520	13520										
		2-3/8	A-23521	A-13521		23521	13521										
		2-1/2	A-23522	A-13522		23522	13522										
		2-3/4	A-23524	A-13524		23524	13524										
		3	A-23525	A-13525		23525	13525										
		3-1/4	A-23526	A-13526		23526	13526										
		3-1/2	A-23527	A-13527		23527	13527										
		3-3/4	A-23528	A-13528		23528	13528										
		4	A-23529	A-13529		23529	13529										
		5	A-23530	A-13530		23530	13530										
		6	A-23531	A-13531		23531	13531										

* Contact factory for pricing on coolant type.

Carr Lane® MANUFACTURING CO.
4200 Carr Lane Ct., P.O. Box 191970
St. Louis, Missouri 63119-7970 USA
Phone: 314-647-6200, FAX: 314-647-5736
Web Site: www.carrlane.com

> **Sports do not build character.**
> **They reveal it.**
>
> John Wooden

24000 SERIES

A ID RANGE	B OD	C LENGTH	TIP ASSEMBLY STANDARD TYPE PART NO.	TIP ASSEMBLY COOLANT TYPE PART NO.	TIP ASSEMBLY STANDARD TYPE PRICE*	SHANK ONLY STANDARD TYPE PART NO.	SHANK ONLY COOLANT TYPE PART NO.	SHANK ONLY STANDARD TYPE PRICE*	COLLAR ONLY STANDARD TYPE PART NO.	COLLAR ONLY COOLANT TYPE PART NO.	COLLAR ONLY STANDARD TYPE PRICE*	TAPER-LOK® LINER PART NO. p. 69	LOCK LINER PART NO. p. 69	LOCK NUT PART NO. p. 69	TAPER-LOK® LOCKSCREW PART NO. p. 71	LOCK SCREW PART NO. p. 71	LINER PART NO. p. 71
.3125-.4062 5/16-13/32 8.00-10.20mm	**5/8** .6248-.6245	5/8	A-24103	A-14103	Please see our web catalog for pricing.	24103	14103	Please see our web catalog for pricing.	24000	14000	Please see our web catalog for pricing.				CL-11-AFL or CL-13-AFL or CL-14-AFL	16532	19947
		3/4	A-24104	A-14104		24104	14104										
		7/8	A-24105	A-14105		24105	14105										
		1	A-24106	A-14106		24106	14106										
		1-1/8	A-24108	A-14108		24108	14108										
		1-1/4	A-24110	A-14110		24110	14110										
		1-3/8	A-24111	A-14111		24111	14111										
		1-1/2	A-24113	A-14113		24113	14113										
		1-5/8	A-24114	A-14114		24114	14114										
		1-3/4	A-24115	A-14115		24115	14115										
		1-7/8	A-24116	A-14116		24116	14116										
		2	A-24118	A-14118		24118	14118										
		2-1/8	A-24119	A-14119		24119	14119										
		2-1/4	A-24120	A-14120		24120	14120										
		2-3/8	A-24121	A-14121		24121	14121										
		2-1/2	A-24122	A-14122		24122	14122										
		2-3/4	A-24124	A-14124		24124	14124										
		3	A-24125	A-14125		24125	14125										
		3-1/4	A-24126	A-14126		24126	14126										
		3-1/2	A-24127	A-14127		24127	14127										
		3-3/4	A-24128	A-14128		24128	14128										
		4	A-24129	A-14129		24129	14129										
		5	A-24130	A-14130		24130	14130										
		6	A-24131	A-14131		24131	14131										
.3125-.5312 5/16-17/32 8.00-13.50mm	**3/4** .7498-.7495	3/4	A-24304	A-14304		24304	14304										19949
		7/8	A-24305	A-14305		24305	14305										
		1	A-24306	A-14306		24306	14306										
		1-1/8	A-24308	A-14308		24308	14308										
		1-1/4	A-24310	A-14310		24310	14310										
		1-3/8	A-24311	A-14311		24311	14311										
		1-1/2	A-24313	A-14313		24313	14313										
		1-5/8	A-24314	A-14314		24314	14314										
		1-3/4	A-24315	A-14315		24315	14315										
		1-7/8	A-24316	A-14316		24316	14316										
		2	A-24318	A-14318		24318	14318										
		2-1/8	A-24319	A-14319		24319	14319										
		2-1/4	A-24320	A-14320		24320	14320										
		2-3/8	A-24321	A-14321		24321	14321										
		2-1/2	A-24322	A-14322		24322	14322										
		2-3/4	A-24324	A-14324		24324	14324										
		3	A-24325	A-14325		24325	14325										
		3-1/4	A-24326	A-14326		24326	14326										
		3-1/2	A-24327	A-14327		24327	14327										
		3-3/4	A-24328	A-14328		24328	14328										
		4	A-24329	A-14329		24329	14329										
		5	A-24330	A-14330		24330	14330										
		6	A-24331	A-14331		24331	14331										

* Contact factory for pricing on coolant type.

Carr Lane® MANUFACTURING CO.
4200 Carr Lane Ct., P.O. Box 191970
St. Louis, Missouri 63119-7970 USA
Phone: 314-647-6200, FAX: 314-647-5736
Web Site: www.carrlane.com

A AIR FEED

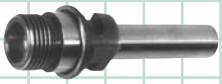

24000 SERIES (CONT.)

A ID RANGE	B OD	C LENGTH	TIP ASSEMBLY STANDARD TYPE PART NO.	TIP ASSEMBLY COOLANT TYPE PART NO.	TIP ASSEMBLY STANDARD TYPE PRICE*	SHANK ONLY STANDARD TYPE PART NO.	SHANK ONLY COOLANT TYPE PART NO.	SHANK ONLY STANDARD TYPE PRICE*	COLLAR ONLY STANDARD TYPE PART NO.	COLLAR ONLY COOLANT TYPE PART NO.	COLLAR ONLY STANDARD TYPE PRICE*	TAPER-LOK® LINER PART NO. p. 69	LOCK LINER PART NO. p. 69	LOCK NUT PART NO. p. 69	TAPER-LOK® LOCKSCREW PART NO. p. 71	LOCK SCREW PART NO. p. 71	LINER PART NO. p. 71
.3125-.6562 5/16-21/32 8.00-16.50mm	7/8 .8745-.8748	7/8	A-24405	A-14405	Please see our web catalog for pricing.	24405	14405	Please see our web catalog for pricing.	24000	14000	Please see our web catalog for pricing.				CL-11-AFL or CL-13-AFL or CL-14-AFL	16532	19950
		1	A-24406	A-14406		24406	14406										
		1-1/8	A-24408	A-14408		24408	14408										
		1-1/4	A-24410	A-14410		24410	14410										
		1-3/8	A-24411	A-14411		24411	14411										
		1-1/2	A-24413	A-14413		24413	14413										
		1-5/8	A-24414	A-14414		24414	14414										
		1-3/4	A-24415	A-14415		24415	14415										
		1-7/8	A-24416	A-14416		24416	14416										
		2	A-24418	A-14418		24418	14418										
		2-1/8	A-24419	A-14419		24419	14419										
		2-1/4	A-24420	A-14420		24420	14420										
		2-3/8	A-24421	A-14421		24421	14421										
		2-1/2	A-24422	A-14422		24422	14422										
		2-3/4	A-24424	A-14424		24424	14424										
		3	A-24425	A-14425		24425	14425										
		3-1/4	A-24426	A-14426		24426	14426										
		3-1/2	A-24427	A-14427		24427	14427										
		3-3/4	A-24428	A-14428		24428	14428										
		4	A-24429	A-14429		24429	14429										
		5	A-24430	A-14430		24430	14430										
		6	A-24431	A-14431		24431	14431										
.3125-.7812 5/16-25/32 8.00-19.50mm	1 .9998-.9995	1	A-24506	A-14506		24506	14506										19951
		1-1/8	A-24508	A-14508		24508	14508										
		1-1/4	A-24510	A-14510		24510	14510										
		1-3/8	A-24511	A-14511		24511	14511										
		1-1/2	A-24513	A-14513		24513	14513										
		1-5/8	A-24514	A-14514		24514	14514										
		1-3/4	A-24515	A-14515		24515	14515										
		1-7/8	A-24516	A-14516		24516	14516										
		2	A-24518	A-14518		24518	14518										
		2-1/8	A-24519	A-14519		24519	14519										
		2-1/4	A-24520	A-14520		24520	14520										
		2-3/8	A-24521	A-14521		24521	14521										
		2-1/2	A-24522	A-14522		24522	14522										
		2-3/4	A-24524	A-14524		24524	14524										
		3	A-24525	A-14525		24525	14525										
		3-1/4	A-24526	A-14526		24526	14526										
		3-1/2	A-24527	A-14527		24527	14527										
		3-3/4	A-24528	A-14528		24528	14528										
		4	A-24529	A-14529		24529	14529										
		5	A-24530	A-14530		24530	14530										
		6	A-24531	A-14531		24531	14531										
.3125-.9062 5/16-29/32 8.00-23.00mm	1-1/8 1.1248-1.1245	1	A-24606	A-14606		24606	14606					TLL-16525 (Matches A-24615 Tip)	A-16525 (Matches A-16505 Tip)	14446			19946
		1-1/8	A-24608	A-14608		24608	14608										
		1-1/4	A-24610	A-14610		24610	14610										
		1-3/8	A-24611	A-14611		24611	14611										
		1-1/2	A-24613	A-14613		24613	14613										
		1-5/8	A-24614	A-14614		24614	14614										
		1-3/4	A-24615	A-14615		24615	14615										
		1-7/8	A-24616	A-14616		24616	14616										
		1-15/16	A-16505	A-14617		16505	14617										
		2	A-24618	A-14618		24618	14618										
		2-1/8	A-24619	A-14619		24619	14619										
		2-1/4	A-24620	A-14620		24620	14620										
		2-3/8	A-24621	A-14621		24621	14621										
		2-1/2	A-24622	A-14622		24622	14622										
		2-3/4	A-24624	A-14624		24624	14624										
		3	A-24625	A-14625		24625	14625										
		3-1/4	A-24626	A-14626		24626	14626										
		3-1/2	A-24627	A-14627		24627	14627										
		3-3/4	A-24628	A-14628		24628	14628										
		4	A-24629	A-14629		24629	14629										
		5	A-24630	A-14630		24630	14630										
		6	A-24631	A-14631		24631	14631										

* Contact factory for pricing on coolant type.

Carr Lane MANUFACTURING CO.
4200 Carr Lane Ct., P.O. Box 191970
St. Louis, Missouri 63119-7970 USA
Phone: 314-647-6200, FAX: 314-647-5736
Web Site: www.carrlane.com

24000 SERIES (CONT.)

A ID RANGE	B OD	C LENGTH	TIP ASSEMBLY STANDARD TYPE PART NO.	TIP ASSEMBLY COOLANT TYPE PART NO.	TIP ASSEMBLY STANDARD TYPE PRICE*	SHANK ONLY STANDARD TYPE PART NO.	SHANK ONLY COOLANT TYPE PART NO.	SHANK ONLY STANDARD TYPE PRICE*	COLLAR ONLY STANDARD TYPE PART NO.	COLLAR ONLY COOLANT TYPE PART NO.	COLLAR ONLY STANDARD TYPE PRICE*	TAPER-LOK® LINER PART NO. p. 69	LOCK LINER PART NO. p. 69	LOCK NUT PART NO. p. 69	TAPER-LOK® LOCKSCREW PART NO. p. 71	LOCK SCREW PART NO. p. 71	LINER PART NO. p. 71
.3125-.9375 5/16-15/16 8.00-23.50mm	1-1/4 1.2498-1.2495	1-1/4	A-24710	A-14710	Please see our web catalog for pricing.	24710	14710	Please see our web catalog for pricing.	24000	14000	Please see our web catalog for pricing.				CL-11-AFL or CL-13-AFL or CL-14-AFL	16532	19952
		1-3/8	A-24711	A-14711		24711	14711										
		1-1/2	A-24713	A-14713		24713	14713										
		1-5/8	A-24714	A-14714		24714	14714										
		1-3/4	A-24715	A-14715		24715	14715										
		1-7/8	A-24716	A-14716		24716	14716										
		2	A-24718	A-14718		24718	14718										
		2-1/8	A-24719	A-14719		24719	14719										
		2-1/4	A-24720	A-14720		24720	14720										
		2-3/8	A-24721	A-14721		24721	14721										
		2-1/2	A-24722	A-14722		24722	14722										
		2-3/4	A-24724	A-14724		24724	14724										
		3	A-24725	A-14725		24725	14725										
		3-1/4	A-24726	A-14726		24726	14726										
		3-1/2	A-24727	A-14727		24727	14727										
		3-3/4	A-24728	A-14728		24728	14728										
		4	A-24729	A-14729		24729	14729										
		5	A-24730	A-14730		24730	14730										
		6	A-24731	A-14731		24731	14731										
.3125-.9375 5/16-15/16 8.00-23.50mm	1-1/2 1.4998-1.4995	1	A-24806	A-14806		24806	14806					TLL-16526 (Matches A-24815 Tip)	A-16526 (Matches A-16506 Tip)	14447			
		1-3/8	A-24811	A-14811		24811	14811										
		1-1/2	A-24813	A-14813		24813	14813										
		1-5/8	A-24814	A-14814		24814	14814										
		1-3/4	A-24815	A-14815		24815	14815										
		1-7/8	A-24816	A-14816		24816	14816										
		1-15/16	A-16506	A-14817		16506	14817										
		2	A-24818	A-14818		24818	14818										
		2-1/8	A-24819	A-14819		24819	14819										
		2-1/4	A-24820	A-14820		24820	14820										
		2-3/8	A-24821	A-14821		24821	14821										
		2-1/2	A-24822	A-14822		24822	14822										
		2-3/4	A-24824	A-14824		24824	14824										
		3	A-24825	A-14825		24825	14825										
		3-1/4	A-24826	A-14826		24826	14826										
		3-1/2	A-24827	A-14827		24827	14827										
		3-3/4	A-24828	A-14828		24828	14828										
		4	A-24829	A-14829		24829	14829										
		5	A-24830	A-14830		24830	14830										
		6	A-24831	A-14831		24831	14831										

25000 SERIES

.3750-1.0312 3/8-1-1/32 9.50-26.00mm	1-1/4 1.2498-1.2495	1-1/4	A-25110	A-15110	See our web catalog for pricing.	25110	15110	See our web catalog for pricing.	25000	15000	See our web catalog for pricing.				CL-12-AFL	16530	19953
		1-3/8	A-25111	A-15111		25111	15111										
		1-1/2	A-25113	A-15113		25113	15113										
		1-5/8	A-25114	A-15114		25114	15114										
		1-3/4	A-25115	A-15115		25115	15115										
		1-7/8	A-25116	A-15116		25116	15116										
		2	A-25118	A-15118		25118	15118										
		2-1/8	A-25119	A-15119		25119	15119										
		2-1/4	A-25120	A-15120		25120	15120										
		2-3/8	A-25121	A-15121		25121	15121										
		2-1/2	A-25122	A-15122		25122	15122										
		2-3/4	A-25124	A-15124		25124	15124										
		3	A-25125	A-15125		25125	15125										
		3-1/4	A-25126	A-15126		25126	15126										
		3-1/2	A-25127	A-15127		25127	15127										
		3-3/4	A-25128	A-15128		25128	15128										
		4	A-25129	A-15129		25129	15129										
		5	A-25130	A-15130		25130	15130										
		6	A-25131	A-15131		25211	15131										

* Contact factory for pricing on coolant type.

Carr Lane® MANUFACTURING CO.
4200 Carr Lane Ct., P.O. Box 191970
St. Louis, Missouri 63119-7970 USA
Phone: 314-647-6200, FAX: 314-647-5736
Web Site: www.carrlane.com

25000 SERIES (CONT.)

A ID RANGE	B OD	C LENGTH	TIP ASSEMBLY STANDARD TYPE PART NO.	TIP ASSEMBLY COOLANT TYPE PART NO.	TIP ASSEMBLY STANDARD TYPE PRICE*	SHANK ONLY STANDARD TYPE PART NO.	SHANK ONLY COOLANT TYPE PART NO.	SHANK ONLY STANDARD TYPE PRICE*	COLLAR ONLY STANDARD TYPE PART NO.	COLLAR ONLY COOLANT TYPE PART NO.	COLLAR ONLY STANDARD TYPE PRICE*	TAPER-LOK® LINER PART NO. p. 69	LOCK LINER PART NO. p. 69	LOCK NUT PART NO. p. 69	TAPER-LOK® LOCKSCREW PART NO. p. 71	LOCK SCREW PART NO. p. 71	LINER PART NO. p. 71
.3750-1.1562 3/8-1-5/32 9.50-29.00mm	1-3/8 1.3748-1.3745	1-3/8	A-25211	A-15211	Please see our web catalog for pricing.	25213	15211	Please see our web catalog for pricing.	25000	15000	Please see our web catalog for pricing.				CL-12-AFL	16530	19954
		1-1/2	A-25213	A-15213		25214	15213										
		1-5/8	A-25214	A-15214		25215	15214										
		1-3/4	A-25215	A-15215		25216	15215										
		1-7/8	A-25216	A-15216		25218	15216										
		2	A-25218	A-15218		25219	15218										
		2-1/8	A-25219	A-15219		25220	15219										
		2-1/4	A-25220	A-15220		25221	15220										
		2-3/8	A-25221	A-15221		25222	15221										
		2-1/2	A-25222	A-15222		25224	15222										
		2-3/4	A-25224	A-15224		25225	15224										
		3	A-25225	A-15225		25226	15225										
		3-1/4	A-25226	A-15226		25227	15226										
		3-1/2	A-25227	A-15227		25228	15227										
		3-3/4	A-25228	A-15228		25229	15228										
		4	A-25229	A-15229		25230	15229										
		5	A-25230	A-15230		25231	15230										
		6	A-25231	A-15231		25313	15231										
.3750-1.2812 3/8-1-9/32 9.50-32.00mm	1-1/2 1.4998-1.4995	1-1/2	A-25313	A-15313		25314	15313										19955
		1-5/8	A-25314	A-15314		25315	15314										
		1-3/4	A-25315	A-15315		25316	15315										
		1-7/8	A-25316	A-15316		25318	15316										
		2	A-25318	A-15318		25319	15318										
		2-1/8	A-25319	A-15319		25320	15319										
		2-1/4	A-25320	A-15320		25321	15320										
		2-3/8	A-25321	A-15321		25322	15321										
		2-1/2	A-25322	A-15322		25324	15322										
		2-3/4	A-25324	A-15324		25325	15324										
		3	A-25325	A-15325		25326	15325										
		3-1/4	A-25326	A-15326		25327	15326										
		3-1/2	A-25327	A-15327		25328	15327										
		3-3/4	A-25328	A-15328		25329	15328										
		4	A-25329	A-15329		25330	15329										
		5	A-25330	A-15330		25331	15330										
		6	A-25331	A-15331		25415	15331										
.3750-1.4688 3/8-1-15/32 9.50-37.00mm	1-3/4 1.7498-1.7495	1-3/4	A-25415	A-15415		25416	15415										19956
		1-7/8	A-25416	A-15416		25418	15416										
		2	A-25418	A-15418		25419	15418										
		2-1/8	A-25419	A-15419		25420	15419										
		2-1/4	A-25420	A-15420		25421	15420										
		2-3/8	A-25421	A-15421		25422	15421										
		2-1/2	A-25422	A-15422		25424	15422										
		2-3/4	A-25424	A-15424		25425	15424										
		3	A-25425	A-15425		25426	15425										
		3-1/4	A-25426	A-15426		25427	15426										
		3-1/2	A-25427	A-15427		25428	15427										
		3-3/4	A-25428	A-15428		25429	15428										
		4	A-25429	A-15429		25430	15429										
		5	A-25430	A-15430		25431	15430										
		6	A-25431	A-15431		25518	15431										
.3750-1.4688 3/8-1-15/32 9.50-37.00mm	2 1.9998-1.9995	2	A-25518	A-15518		16513	15518						A-16533 (Matches A-16513 Tip)	14448			
		2-5/8	A-16513	A-15523		25524	15523										
		2-3/4	A-25524	A-15524		25525	15524										
		3	A-25525	A-15525		25526	15525										
		3-1/4	A-25526	A-15526		25527	15526										
		3-1/2	A-25527	A-15527		25528	15527										
		3-3/4	A-25528	A-15528		25529	15528										
		4	A-25529	A-15529		25530	15529										
		5	A-25530	A-15530		25531	15530										
		6	A-25531	A-15531			15531										

* Contact factory for pricing on coolant type.

Carr Lane MANUFACTURING CO.
4200 Carr Lane Ct., P.O. Box 191970
St. Louis, Missouri 63119-7970 USA
Phone: 314-647-6200, FAX: 314-647-5736
Web Site: www.carrlane.com

AIR FEED

AT-TYPE ONE-PIECE ADAPTER TIPS

ADAPTER TIP

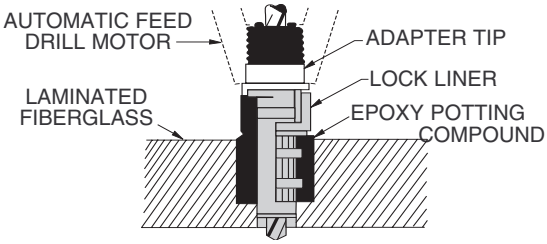

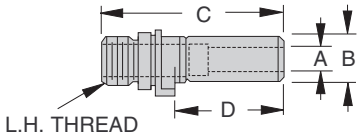

AT-series adapter tips are one-piece adapters primarily for fiberglass and plastic tooling. They are used with AT-series knurled liners, and are not compatible with any other liners or air-feed accessories. AT-series bushings are available in 3/4-16 and 1"-14 mounting-thread sizes, in a total of four OD sizes, to fit drill diameters from .1910" to .6250".

AT-TYPE ADAPTER TIPS

PART NO.	A ID RANGE	B OD	C	D	L.H. THREAD	LIST & QUANTITY PRICES				
						1-3	4-6	7-12	13-24	25-49
AT-1	.1910-.2055 #11-#5	11/32 .3437-.3435	2-7/16	1-9/16	3/4-16	Please see our web catalog for pricing.				
AT-2	.1910-.2850 #11-9/32	7/16 .4375-.4373								
AT-3	.2810-.4130 K-Z	9/16 .5625-.5623								
AT-4	.2810-.6250 K-5/8	3/4 .7500-.7498			1-14					

LOCK LINER

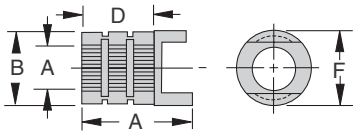

Precision knurled liner bushing for mounting air-feed drills in fiberglass or plastic tooling. AT-series knurled lock liners are designed especially for AT-series one-piece adapter tips, and are not compatible with any other liners or air-feed accessories. Press-fit AT-series liners are available as specials. Available in four sizes.

AT-TYPE LOCK LINERS

PART NO.	A ID	B OD	C	D	F DIA	LIST & QUANTITY PRICES							
						1-6	7-12	13-24	25-49	50-99	100-199	200-499	500-999
LL-1	11/32 .3440-.3443	9/16	1-3/8	7/8	11/16	Please see our web catalog for pricing.							
LL-2	7/16 .4377-.4380	11/16			13/16								
LL-3	9/16 .5627-.5630	13/16			15/16								
LL-4	3/4 .7503-.7506	1			1-1/8								

CarrLane® MANUFACTURING CO.
4200 Carr Lane Ct., P.O. Box 191970
St. Louis, Missouri 63119-7970 USA
Phone: 314-647-6200, FAX: 314-647-5736
Web Site: www.carrlane.com

(12/07)

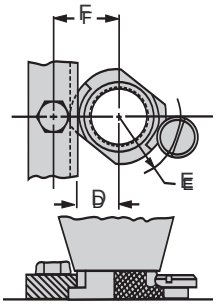

MOUNTING DIMENSIONS FOR LOCKSCREWS AND LOCK STRIPS

DIMENSION	21000 SERIES	22000 SERIES	23000 SERIES	24000 SERIES	25000 SERIES
D	.312	.609	.734	.859	—
E	.625	.922	1.047	1.172	1.562
F	.687	.984	1.109	1.234	—

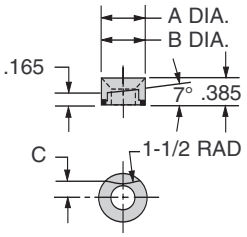

TAPER-LOK® AIR-FEED LOCKSCREWS

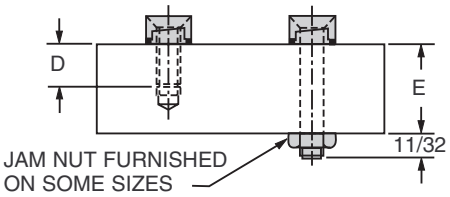

Angular locking surface mates perfectly with air-feed collars. Use instead of standard lockscrews for greater strength . . . eliminates worn, bent, or broken lockscrews caused by point contact. Serrations at bottom bite into the fixture plate to positively prevent rotation under heavy torque loads. Alloy steel mounting screws furnished. Patent No. 3,336,822.

PART NO.	MOUNTING SCREW DIA	MOUNTING SCREW	A DIA	B DIA	C	D	E	REPLACES STANDARD LOCKSCREW	PRICE EACH
CL-9-AFL	5/16	Not Furnished	5/8	19/32	3/16	—	—	—	Please See our web catalog for pricing.
CL-11-AFL		5/16-18x1.00				19/32		16531 & 16532	
CL-13-AFL		5/16-18x1.50 w/Jam Nut				1-3/32	3/4	—	
CL-14-AFL		5/16-18x2.00 w/Jam Nut				1-19/32	1-1/4		
CL-10-AFL	3/8	Not Furnished	3/4	23/32	7/32	—	—	—	
CL-12-AFL		3/8-16x1.00				19/32		16530	

LOCKSCREWS

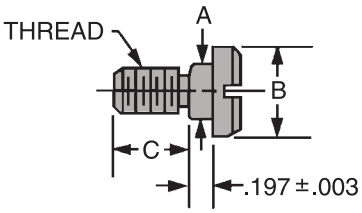

PART NO.	A DIA	B DIA	C	B THREAD	PRICE EACH
16531	3/8	5/8	5/16	5/16-18	See our website for pricing.
16532			7/16		
16530	7/16	3/4	5/8	3/8-16	

LINERS

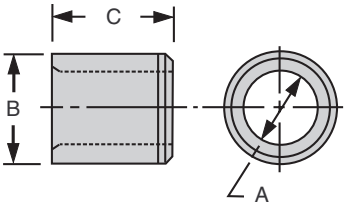

PART NO.	A ID	B OD	C LENGTH	PRICE EACH
19936	3/8	5/8	1	Please See our web catalog for pricing.
19937	7/16	3/4	1	
19938	1/2			
19939	9/16	7/8	1	
19940	5/8			
19947			1-3/4	
19941	3/4	1	1	
19942			1-3/8	
19949			1-3/4	
19943	13/16	1-3/8	1-3/8	
19944	7/8			
19950			1-3/4	
19945	1		1-3/8	
19951			1-3/4	
19946	1-1/8	1-3/4	1-3/4	
19952	1-1/4			
19953			2-1/2	
19954	1-3/8			
19955	1-1/2	2-1/4	2-1/2	
19956	1-3/4			

LOCK STRIPS

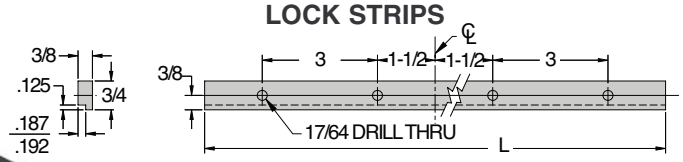

PART NO.	L OVERALL LENGTH	NO. OF HOLES	PRICE EACH
LSM-12	12	4	See our website for pricing.
LSM-24	24	8	
LSM-36	36	12	

Carr Lane MANUFACTURING CO.
4200 Carr Lane Ct., P.O. Box 191970
St. Louis, Missouri 63119-7970 USA
Phone: 314-647-6200, FAX: 314-647-5736
Web Site: www.carrlane.com

A AIR FEED

TAPER-LOK® LINERS

PRESS FIT

Precision liner bushing for mounting air-feed drills through a jig plate. One-piece design has two angled locking surfaces to lock the drill motor in place, for superior strength. Milled flats allow close hole spacing. Press fit into jig plate, then fasten from behind with a Lock Nut (order separately). Optional heavy-duty type has precisely machined helical locking surfaces that mate exactly with the air-feed collar for added mpacy resistance. Patent no. 3,015,242. Available for 21000 through 24000 series air-feed drills (not 25000 series).

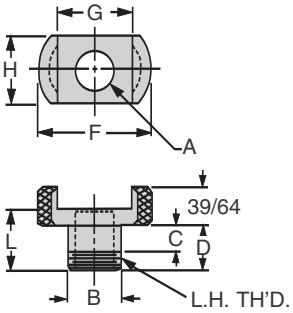

PRESS FIT – STANDARD

PART NO.	A DIA	B DIA	C	D	F DIA	G	H	L	L.H. THREAD	MATCHING LOCK NUT	MATCHING ADAPTOR TIP	PRICE EACH
TLL-16520	.3750 .3755	.4995 .4990	7/16	3/4	1-1/8	.625	3/4	1	1/2-20	14441	A-21106	Please see our web catalog for pricing.
TLL-16521	.5000 .5005	.7495 .7490	7/16	3/4	1-3/16	.625	7/8	1	3/4-16	14442	A-21306	
TLL-16522	.6250 .6255	.8745 .8740	7/16	3/4	1-13/16	1.218	1-1/8	1	7/8-14	14443	A-22406	
TLL-16523	.8750 .8756	1.2495 1.2490	9/16	1	2-1/8	1.468	1-3/8	1-1/4	1-1/4-12	14445	A-23310	
TLL-16524	1.1252	1.4990	27/32	1-1/2	2-1/8	1.468	1-5/8	1-3/4	1-1/2-12	14446	A-23515	
TLL-16525	1.1258	1.4985			2-7/16	1.718					A-24615	
TLL-16526	1.5002 1.5008	1.9990 1.9985	27/32	1-1/2	2-7/16	1.718	2-1/8	1-3/4	2-16	14447	A-24815	

NEW HEAVY-DUTY VERSION!

PRESS FIT – HEAVY DUTY

PART NO.	A DIA	B DIA	C	D	F DIA	G	H	L	L.H. THREAD	MATCHING LOCK NUT	MATCHING ADAPTOR TIP	PRICE EACH
HLL-16520	.3750 .3755	.4995 .4990	7/16	3/4	1-1/8	.625	3/4	1	1/2-20	14441	A-21106	Please see our web catalog for pricing.
HLL-16521	.5000 .5005	.7495 .7490	7/16	3/4	1-3/16	.625	7/8	1	3/4-16	14442	A-21306	
HLL-16522	.6250 .6255	.8745 .8740	7/16	3/4	1-13/16	1.218	1-1/8	1	7/8-14	14443	A-22406	
HLL-16523	.8750 .8756	1.2495 1.2490	9/16	1	2-1/8	1.468	1-3/8	1-1/4	1-1/4-12	14445	A-23310	
HLL-16524	1.1252	1.4990	27/32	1-1/2	2-1/8	1.468	1-5/8	1-3/4	1-1/2-12	14446	A-23515	
HLL-16525	1.1258	1.4985			2-7/16	1.718					A-24615	
HLL-16526	1.5002 1.5008	1.9990 1.9985	27/32	1-1/2	2-7/16	1.718	2-1/8	1-3/4	2-16	14447	A-24815	

KNURLED

Precision knurled liner bushing for mounting air-feed drills in fiberglass or plastic tooling. One-piece design has two angled locking surfaces to lock the drill motor in place, for superior strength. Optional heavy-duty type has precisely machined helical locking surfaces that mate exactly with the air-feed colla for added impact esistance. Milled flats allow close hole spacing. Available for 21000 and 22000 series air-feed drills. Patent no. 3,015,242.

KNURLED – STANDARD

PART NO.	A DIA	B DIA	D	F DIA	G	H	L	MATCHING ADAPTOR TIP	PRICE EACH
TLD-375	.3750 .3755	3/4	7/8	1-3/16	.625	7/8	1-1/8	A-21108	Please see our web catalog for pricing.
TLD-500	.5000 .5005	3/4	7/8	1-3/16	.625	7/8	1-1/8	A-21308	
TLD-750	.7500 .7505	1-1/8	7/8	1-13/16	1.218	1-1/8	1-1/8	A-22508	

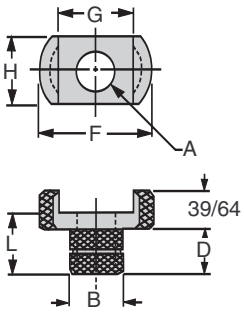

NEW HEAVY-DUTY VERSION!

KNURLED – HEAVY DUTY

PART NO.	A DIA	B DIA	D	F DIA	G	H	L	MATCHING ADAPTOR TIP	PRICE EACH
HLD-375	.3750 .3755	3/4	7/8	1-3/16	.625	7/8	1-1/8	A-21108	Please see our web catalog for pricing.
HLD-500	.5000 .5005	3/4	7/8	1-3/16	.625	7/8	1-1/8	A-21308	
HLD-750	.7500 .7505	1-1/8	7/8	1-13/16	1.218	1-1/8	1-1/8	A-22508	

Carr Lane MANUFACTURING CO.
4200 Carr Lane Ct., P.O. Box 191970
St. Louis, Missouri 63119-7970 USA
Phone: 314-647-6200, FAX: 314-647-5736
Web Site: www.carrlane.com

AIR FEED

A

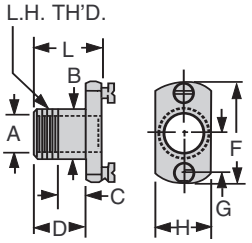

STANDARD

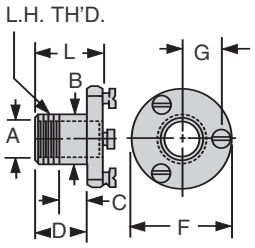

A-16533 ONLY

LOCK LINERS

Precision liner bushing for mounting air-feed drills through a jig plate. The large head holds two standard Lockscrews, to lock the drill motor in place. Milled flats allow close hole spacing. Press fit into jig plate, then fasten from behind with a Lock Nut (order separately). Available for 21000 through 25000 series air-feed drills.

PART NO.	A DIA	B DIA	C	D	F DIA	G	H	L	L.H. THREAD	MATCHING LOCK NUT	MATCHING ADAPTOR TIP	PRICE EACH
A-16520	.3750 .3756	.4995 .4989	7/16	3/4	1-3/4	5/8	3/4	1-1/16	1/2-20	14441	A-16500	Please see our web catalog for pricing.
A-16521	.5000 .5006	.7495 .7489	7/16	3/4	1-3/4	5/8	1	1-1/16	3/4-16	14442	A-16501	
A-16522	.6250 .6256	.8745 .8739	7/16	3/4	2-7/16	59/64	1-1/8	1-3/16	7/8-14	14443	A-16502	
A-16523	.8750 .8756	1.2495 1.2485	9/16	1	2-11/16	1-3/64	1-1/2	1-7/16	1-1/4-12	14445	A-16503	
A-16524	1.1250 1.1260	1.4990 1.4980	27/32	1-1/2	2-11/16	1-3/64	1-3/4	1-15/16	1-1/2-12	14446	A-16504	
A-16525	1.1250 1.1260	1.4990 1.4980	27/32	1-1/2	3	1-11/64	1-3/4	1-15/16	1-1/2-12	14446	A-16505	
A-16526	1.5000 1.5010	1.9990 1.9980	27/32	1-1/2	3	1-11/64	2-1/2	1-15/16	2"-16	14447	A-16506	
A-16533	2.0000 2.0015	2.4990 2.4980	1-3/8	2	3-3/4	1-9/16	—	2-5/8	2-1/2-16	14448	A-16513	

LOCK NUTS

These fine-thread Lock Nuts fit the entire range of standard lock liners. Lock liners press fit into the jig plate, then fasten from behind with a Lock Nut.

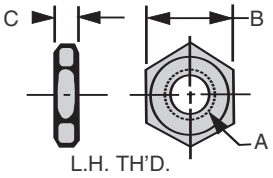

LOCK NUT PART NO.	A (THREAD SIZE)	B	C	PRICE EACH
14441	1/2-20	3/4	1/4	Please see our web catalog for pricing.
14442	3/4-16	1	1/4	
14443	7/8-14	1-1/4	1/4	
14445	1-1/4-12	1-3/4	3/8	
14446	1-1/2-12	2	1/2	
14447	2-16	2-1/2	1/2	
14448	2-1/2-16	3	1/2	

REDUCERS

These Reducers allow mounting a smaller-series air-feed adaptor tip on a larger-series drill motor. Available for either standard or coolant-type air-feed drills. Available for 22000 through 25000 series air-feed drill motors. Two Reducers can be used together to step down several sizes.

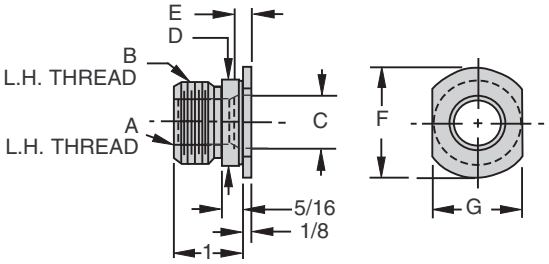

PART NO. STANDARD TYPE	PART NO. COOLANT TYPE	A INSIDE THREAD	B OUTSIDE THREAD	C DIA	D DIA	E	F DIA	G*	STANDARD TYPE PRICE	COOLANT TYPE PRICE
17952	A-17952	3/4-16	1-14	.8125	1.0610-1.0604	9/32	1-3/8	1-1/16	Please see our web catalog for pricing.	
25018	A-25018		1-1/4-12		1.3110-1.3104		1-5/8	1-5/16		
25582	A-25582		1-1/2-12		1.5610-1.5604		1-15/16	1-9/16		
25583	A-25583	1-14	1-1/4-12	1.0625	1.3110-1.3104	11/32	1-5/8	1-5/16		
20132	A-20132		1-1/2-12		1.5610-1.5604		1-15/16	1-9/16		
20017	A-20017	1-1/4-12	1-1/2-12	1.3125	1.5610-1.5604	11/32	1-15/16	1-9/16		
27910	A-27910	1-1/2-12	2-16	1.5625	2.0610-2.0604	11/32	2-1/2	2-1/16		

* Coolant type does not have wrench flats.

Carr Lane MANUFACTURING CO.
4200 Carr Lane Ct., P.O. Box 191970
St. Louis, Missouri 63119-7970 USA
Phone: 314-647-6200, FAX: 314-647-5736
Web Site: www.carrlane.com

USA DRILL SIZES

Drill	Decimal	Drill	Decimal	Drill	Decimal
80	.0135	9/64	.1406	23/64	.3594
79	.0145	27	.1440	U	.3680
1/64	.0156	26	.1470	**3/8**	**.3750**
78	.0160	25	.1495	V	.3770
77	.0180	24	.1520	W	.3860
76	.0200	23	.1540	25/64	.3906
75	.0210	5/32	.1562	X	.3970
74	.0225	22	.1570	Y	.4040
73	.0240	21	.1590	13/32	.4062
72	.0250	20	.1610	Z	.4130
71	.0260	19	.1660	27/64	.4219
70	.0280	18	.1695	**7/16**	**.4375**
69	.0292	11/64	.1719	29/64	.4531
68	.0310	17	.1730	15/32	.4688
1/32	.0312	16	.1770	31/64	.4844
67	.0320	15	.1800	**1/2**	**.5000**
66	.0330	14	.1820	33/64	.5156
65	.0350	13	.1850	17/32	.5312
64	.0360	**3/16**	**.1875**	35/64	.5469
63	.0370	12	.1890	**9/16**	**.5625**
62	.0380	11	.1910	37/64	.5781
61	.0390	10	.1935	19/32	.5938
60	.0400	9	.1960	39/64	.6094
59	.0410	8	.1990	**5/8**	**.6250**
58	.0420	7	.2010	41/64	.6406
57	.0430	13/64	.2031	21/32	.6562
56	.0465	6	.2040	43/64	.6719
3/64	.0469	5	.2055	**11/16**	**.6875**
55	.0520	4	.2090	45/64	.7031
54	.0550	3	.2130	23/32	.7188
53	.0595	7/32	.2188	47/64	.7344
1/16	**.0625**	2	.2210	**3/4**	**.7500**
52	.0635	1	.2280	49/64	.7656
51	.0670	A	.2340	25/32	.7812
50	.0700	15/64	.2344	51/64	.7969
49	.0730	B	.2380	**13/16**	**.8125**
48	.0760	C	.2420	53/64	.8281
5/64	.0781	D	.2460	27/32	.8438
47	.0785	E	.2500	55/64	.8594
46	.0810	**1/4**	**.2500**	**7/8**	**.8750**
45	.0820	F	.2570	57/64	.8906
44	.0860	G	.2610	29/32	.9062
43	.0890	17/64	.2656	59/64	.9219
42	.0935	H	.2660	**15/16**	**.9375**
3/32	.0938	I	.2720	61/64	.9531
41	.0960	J	.2770	31/32	.9688
40	.0980	K	.2810	63/64	.9844
39	.0995	9/32	.2812	**1**	**1.0000**
38	.1015	L	.2900		
37	.1040	M	.2950	+64th	
36	.1065	19/64	.2969	increments up	
7/64	.1094	N	.3020	to 1-7/8"	
35	.1100	**5/16**	**.3125**		
34	.1110	O	.3160	+32nd	
33	.1130	P	.3230	increments up	
32	.1160	21/64	.3281	to 2-1/4"	
31	.1200	Q	.3320		
1/8	**.1250**	R	.3390	+16th	
30	.1285	11/32	.3438	increments up	
29	.1360	S	.3480	to 4-1/4"	
28	.1405	T	.3580		

METRIC DRILL SIZES

Drill	Decimal	Drill	Decimal	Drill	Decimal
.35mm	.0138	3.60mm	.1417	8.70mm	.3425
.38mm	.0150	3.70mm	.1457	8.75mm	.3445
.40mm	.0157	3.75mm	.1476	8.80mm	.3465
.42mm	.0165	3.80mm	.1496	8.90mm	.3504
.45mm	.0177	3.90mm	.1535	**9.00mm**	**.3543**
.48mm	.0189	**4.00mm**	**.1575**	9.10mm	.3583
.50mm	.0197	4.10mm	.1614	9.20mm	.3622
.55mm	.0217	4.20mm	.1654	9.25mm	.3642
.60mm	.0236	4.25mm	.1673	9.30mm	.3661
.65mm	.0256	4.30mm	.1693	9.40mm	.3701
.70mm	.0276	4.40mm	.1732	9.50mm	.3740
.75mm	.0295	4.50mm	.1772	9.60mm	.3780
.80mm	.0315	4.60mm	.1811	9.70mm	.3819
.85mm	.0335	4.70mm	.1850	9.75mm	.3839
.90mm	.0354	4.75mm	.1870	9.80mm	.3858
.95mm	.0374	4.80mm	.1890	9.90mm	.3898
1.00mm	**.0394**	4.90mm	.1929	**10.00mm**	**.3937**
1.05mm	.0413	**5.00mm**	**.1969**	10.20mm	.4016
1.10mm	.0433	5.10mm	.2008	10.50mm	.4134
1.15mm	.0453	5.20mm	.2047	10.80mm	.4252
1.20mm	.0472	5.25mm	.2067	**11.00mm**	**.4331**
1.25mm	.0492	5.30mm	.2087	11.20mm	.4409
1.30mm	.0512	5.40mm	.2126	11.50mm	.4528
1.35mm	.0531	5.50mm	.2165	11.80mm	.4646
1.40mm	.0551	5.60mm	.2205	**12.00mm**	**.4724**
1.45mm	.0571	5.70mm	.2244	12.20mm	.4803
1.50mm	.0591	5.75mm	.2264	12.50mm	.4921
1.55mm	.0610	5.80mm	.2283	**13.00mm**	**.5118**
1.60mm	.0630	5.90mm	.2323	13.50mm	.5315
1.65mm	.0650	**6.00mm**	**.2362**	**14.00mm**	**.5512**
1.70mm	.0669	6.10mm	.2402	14.50mm	.5709
1.75mm	.0689	6.20mm	.2441	**15.00mm**	**.5906**
1.80mm	.0709	6.25mm	.2461	15.50mm	.6102
1.85mm	.0728	6.30mm	.2480	**16.00mm**	**.6299**
1.90mm	.0748	6.40mm	.2520	16.50mm	.6496
1.95mm	.0768	6.50mm	.2559	**17.00mm**	**.6693**
2.00mm	**.0787**	6.60mm	.2598	17.50mm	.6890
2.05mm	.0807	6.70mm	.2638	**18.00mm**	**.7087**
2.10mm	.0827	6.75mm	.2657	18.50mm	.7283
2.15mm	.0846	6.80mm	.2677	**19.00mm**	**.7480**
2.20mm	.0866	6.90mm	.2717	19.50mm	.7677
2.25mm	.0886	**7.00mm**	**.2756**	**20.00mm**	**.7874**
2.30mm	.0906	7.10mm	.2795	20.50mm	.8071
2.35mm	.0925	7.20mm	.2835	**21.00mm**	**.8268**
2.40mm	.0945	7.25mm	.2854	21.50mm	.8465
2.45mm	.0965	7.30mm	.2874	**22.00mm**	**.8661**
2.50mm	.0984	7.40mm	.2913	22.50mm	.8858
2.55mm	.1004	7.50mm	.2953	**23.00mm**	**.9055**
2.60mm	.1024	7.60mm	.2992	23.50mm	.9252
2.65mm	.1043	7.70mm	.3031	**24.00mm**	**.9449**
2.70mm	.1063	7.75mm	.3051	24.50mm	.9646
2.75mm	.1083	7.80mm	.3071	**25.00mm**	**.9843**
2.80mm	.1102	7.90mm	.3110		
2.90mm	.1142	**8.00mm**	**.3150**	+1.00mm	
3.00mm	**.1181**	8.10mm	.3189	increments	
3.10mm	.1220	8.20mm	.3228	up to 48mm	
3.20mm	.1260	8.25mm	.3248		
3.25mm	.1280	8.30mm	.3268	+5.00mm	
3.30mm	.1299	8.40mm	.3307	increments	
3.40mm	.1339	8.50mm	.3346	from 50mm	
3.50mm	.1378	8.60mm	.3386	up to 105mm	

TAP GUIDE SIZES
(Priced as specials)

Tap Size*	Tap Guide Nominal ID Size	Tap Drill Size**
#0-80	.0616	3/64
#2-56	.0883	#50
#2-64	.0880	#50
#4-40	.1152	#43
#4-48	.1147	#42
#5-40	.1282	#38
#5-44	.1280 (3.25mm)	#37
#6-32	.1421	#36
#6-40	.1412	#33
#8-32	.1681	#29
#8-36	.1676	#29
#10-24	.1954	#25
#10-32	.1941	#21
1/4-20	.2565	#7
1/4-28	.2546	#3
5/16-18	.3197	F
5/16-24	.3179	I
3/8-16	.3831	5/16
3/8-24	.3804	Q
7/16-14	.4468	U
7/16-20	.4440	25/64
1/2-13	.5100	27/64
1/2-20	.5065	29/64
9/16-12	.5733	31/64
9/16-18	.5697	33/64
5/8-11	.6368	17/32
5/8-18	.6322	37/64
3/4-10	.7630	21/32
3/4-16	.7581	11/16
7/8-9	.8894	49/64
7/8-14	.8843	13/16
1-8	1.0162	7/8
1-14	1.0093	15/16
METRIC		
M1.6x0.35	.0651	1.25mm or #55
M2x0.4	.0810 (#46)	1.60mm or #52
M2.5x0.45	.1008	2.05mm or #46
M3x0.5	.1207	2.50mm or #39
M3.5x0.6	.1407	2.90mm or #32
M4x0.7	.1613	3.30mm or #30
M5x0.8	.2010 (#7)	4.20mm or #19
M6x1	.2410	5.00mm or #8
M8x1.25	.3214	6.80mm or H
M8x1	.3197	7.00mm or J
M10x1.5	.4009	8.50mm or R
M10x1.25	.4002	8.80mm or 11/32
M12x1.75	.4805	10.20mm or 13/32
M12x1.25	.4789	10.80mm or 27/64
M14x2	.5600	12.00mm or 15/32
M14x1.5	.5584	12.50mm or 1/2
M16x2	.6387	14.00mm or 35/64
M16x1.5	.6372	14.50mm or 37/64
M18x2.5	.7191	15.50mm or 39/64
M18x1.5	.7159	16.50mm or 21/32
M20x2.5	.7978	17.50mm or 11/16
M20x1.5	.7946	18.50mm or 47/64
M22x2.5	.8765	19.50mm or 49/64
M22x1.5	.8734	20.50mm or 13/16
M24x3	.9583	21.00mm or 53/64
M24x2	.9537	22.00mm or 7/8

* Coarse series shown in bold. Pitch callout not required on metric coarse series.
** Closest size for 75% theoretical thread.

Carr Lane®
MANUFACTURING CO.
4200 Carr Lane Ct., P.O. Box 191970
St. Louis, Missouri 63119-7970 USA
Phone: 314-647-6200, FAX: 314-647-5736
Web Site: www.carrlane.com

SWIFTSURE®

Power Workholding
Precision Vises
Quick Die and Mold Change

GUARANTEE OF QUALITY

SWIFTSURE components are carefully designed, manufactured, inspected, and individually tested prior to shipment. In the unlikely case you find a defect in materials or workmanship within 6 months after receipt, we will promptly repair or replace the component, in accordance with our Limited Warranty below. Our liability is limited to replacement of the part and this warranty does not apply to altered or misapplied products.

Limited Warranty

Seller warrants that the product described herein will be free from defects in material and workmanship. If any failure to conform to this warranty be found within six (6) months, from date of receipt of the product by Buyer, and Seller is given immediate notification thereof, Seller, upon being satisfied of the existence of such nonconformity, will correct the same by replacement of the defective product or making suitable repairs. If the Seller is unable to correct such nonconformity by replacement of the product or making suitable repairs, whether due to the nature of such nonconformity, the use made by the Buyer of the product, or for any other reason, it will return to Buyer the price set forth herein, or where appropriate, the unit price for such number or quantity of products as shall have such nonconformity which Seller is unable to correct, upon Seller's receipt of the nonconforming product f.o.b. its plant; provided, however, no product shall be returned to Seller without its express written consent; and provided further that such receipt of any nonconforming product will not be required where it is no longer possible for Buyer to return the same to Seller. In no event shall Seller be liable to Buyer, either directly or by way of contribution or indemnity, for direct, special, incidental or consequential damages such as, but not limited to, property damage, loss of profit, damages based on loss of use of the product, or damages for cover, whether the claim for any such damages be based on warranty, express or implied, contract, tort, or otherwise. THE FOREGOING IS SELLER'S SOLE WARRANTY WITH RESPECT TO THE PRODUCT. SELLER MAKES NO OTHER WARRANTIES, EXPRESS OR IMPLIED, INCLUDING IMPLIED WARRANTIES OF MERCHANTABILITY AND FITNESS FOR A PARTICULAR PURPOSE.

Contents

Technical Information

Product Features ....2 - 3
Design Information ....4 - 10
Safety Precautions 11

Clamps & Cylinders

Extending Clamps ....13.1 - 13.6
Swing Clamps ....17 - 23.3
Air-Powered Swing Clamps ....26 - 27
Edge Clamps 29
Threaded-Body Push Clamps ....32 - 37.1
Locking Piston Clamps ....See Website
Block Cylinders ....38 - 39
Hollow-Plunger Clamps 45
Pull Clamps 46

Work Supports

Spring-Extended Work Supports ....48 - 52, 55 - 56
Fluid-Advanced Work Supports ....48 - 54, 57 - 58
Air-Advanced Work Supports ....48 - 52, 55

Power Vises & Universal Fixtures

Standard Machine Vises ....59 - 60
Machining Center Vises ....61.2 - 61.4
Concentric Clamping ....64 - 65.1
Concentric Vises ....65.2 - 65.4
Collet Vises ....71 - 71.1

Power Sources

Electric Power Units ....74 - 77
Air Power Units ....79 - 80
Hand Pumps ....81 - 82
Screw Pumps 83

Valves

Clamping Valves ....87 - 89.1
Sequence Valves ....92 - 93
Pressure-Reducing Valves ....94.2 - 94.3
Pilot-Operated Check Valves ....95 - 96
Shutoff and Pressure-Relief Valves 97
Flow-Control Valves and Check Valves 98

Fittings & Accessories

Rotary Couplings ....101 - 105
Pallet Decoupling ....106 - 115
Pressure Switches 117
Air Accessories 118
Manifolds 118
Pressure Gauges 118
Quick Disconnects 119
Fluid Filters 119.1
Tubing and Hoses 120
Hydraulic Fluid 120
Fittings ....121 - 124
Contact Bolts 128

What makes *SWIFTSURE* Power Workholding better than earlier hydraulic clamps?

1 Designs specifically and purely for workholding

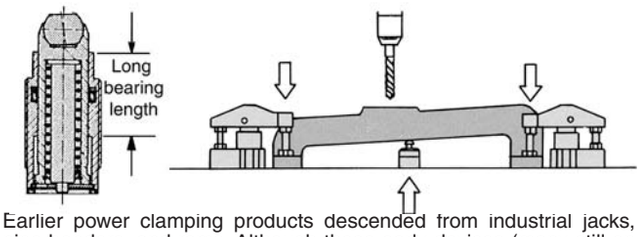

Earlier power clamping products descended from industrial jacks, pipe benders, and rams. Although these early devices (many still on the market) are fine for their original uses, they do not meet the special demands of modern workholding. For example, in a machining application, components are often subject to side loading due to cutting forces, not simply axial loads. This condition requires totally different engineering to provide sufficient bearing lengths for durability. As another example, workholding components are frequently exposed to coolant, chips, dirt, and grit, so clamps must include effective wipers and vent filters. Also, industrial cylinders converted to clamps are usually too bulky to fit easily on fixtures.

2 Compactness, with 7500-psi operating pressure

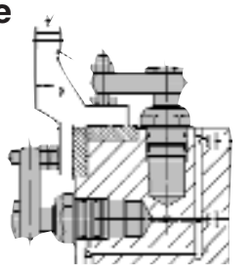

Earlier power clamps could operate at only 2000 to 3500 psi (pounds per square inch) fluid pressure. You needed large, bulky clamps with large internal cylinders to provide enough clamping force. SWIFTSURE components are designed differently, inside and out, to fit easily on fixtures. They work comfortably even at 7500 psi, letting you use much smaller clamps to get the same clamping force. Compact SWIFTSURE clamps open up new fixturing possibilities: you can now place clamps in tighter spots than before, and with the extra space, you can put more workpieces on a fixture (for example, six parts per cycle instead of only 4).

3 Zero-leakage sealing technology

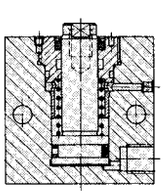

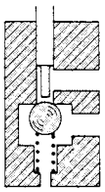

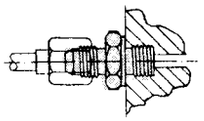

Another feature unique to SWIFTSURE power workholding is leak-free hydraulic sealing. Zero leakage is always important for safe clamping, and is absolutely vital on portable palletized fixtures. Maintaining pressure in a closed, disconnected system requires that *all* components – clamps, valves, and fittings – be leak-free. This calls for drastic changes in sealing techniques: cylinder seals are different, poppet valves (not leaky spool valves) are used whenever possible, and all fittings use metal-to-metal sealing (straight BSPP pipe threads with knife-edge sealing, instead of leak-prone tapered pipe threads).

4 State-of-the-art product development

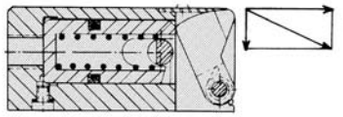

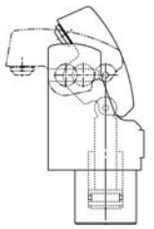

The Edge Clamps and Extending Clamps shown above are just two examples of advanced clamp designs in the SWIFTSURE line. Both set new standards for good engineering and compact size. Our many new products and product improvements result from constant, extensive research and development. New products are field tested and proven, often for years, before they are ever offered for sale.

5 Extensive clamp sizes that follow a logical progression

Our SWIFTSURE line offers a vast selection of clamp sizes and varieties, to match your requirements exactly. In fact, we offer *several times* as many catalog models as our closest competitor (with much better stock too)! Just as important, our clamp sizes follow a logical progression of clamping forces, so you can usually find a clamp that is just the right size.

6 Manifold mounting

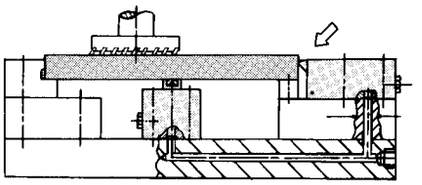

Our SWIFTSURE line pioneered the ever-increasing use of manifold mounting: supplying fluid to clamps through passages drilled in the fixture, rather than through tubing or hoses. Manifold mounting, which requires specially designed clamps, allows designing totally "clean" fixtures without chip traps. Also, manifold mounting lets you put clamps closer together and in tighter spots, often letting you put more workpieces on a fixture.

SWIFTSURE®

CARR LANE ROEMHELD MFG. CO.

Sales—Phone (314) 647-6200 Fax (314) 647-5736
Engineering—Phone 1-800-827-2526 Fax (636) 386-8034

7 Work Supports

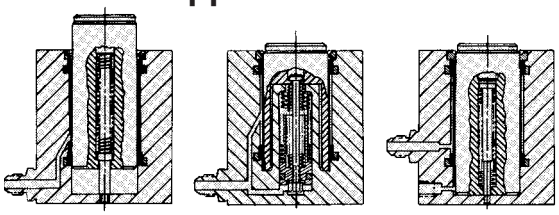

One of the most important improvements in power workholding is the work support. These components do not exert clamping force; instead, they lock off to restrain a workpiece during machining to prevent deflection and vibration. SWIFTSURE work supports offer two major improvements: (1) drastically improved accuracy, with +/-.0002 inches repeatability, and (2) fluid-advanced and air-advanced supports. Fluid- and air-advanced versions offer significant advantages over conventional spring-loaded work supports. A spring-loaded support relies on a workpiece's weight to depress its support plunger to the proper height. While fluid pressure is off, the plunger remains in a raised position on the machine and can hamper loading and unloading. A fluid-advanced work support's plunger, on the other hand, is retracted when fluid pressure is off. Applying pressure first raises the plunger gently to the workpiece, then automatically locks it at the correct height. When pressure is released, the plunger retracts again for clear loading.

8 Swing Clamps

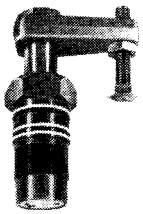

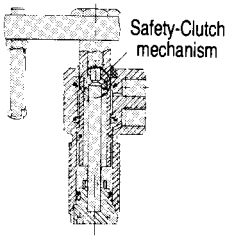

In all modesty, SWIFTSURE Swing Clamps are by far the finest available anywhere, both in features and durability. Our proprietary safety-clutch mechanism prevents damage if the clamping arm strikes an unexpected object, such as an incorrectly loaded workpiece. The arm clutch disengages to avoid damaging the object or the clamp's helical-cam mechanism. In addition, our swing clamps incorporate a fast, totally dependable spring return, unlike our competitors'. We offer many varieties and sizes of swing clamps, including super-miniature and manifold-mounted versions.

9 Power Units for Workholding

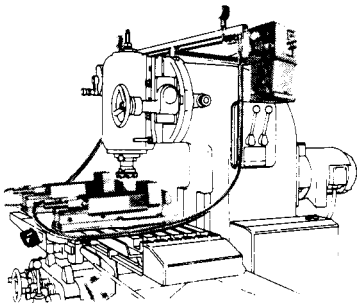

Early power-clamping systems relied either on limited-capacity air/oil intensifiers or on massive, noisy pumps for hydraulic power. SWIFTSURE Electric and Air Power Units are totally different: they are compact, quiet power units designed especially for workholding. These turnkey units include an extremely durable pump, large fluid reservoir, clamping valves, switches, gauges, and numerous safety devices. Workholding power units are becoming a standard accessory on milling machines and machining centers.

10 Pallet Coupling Systems

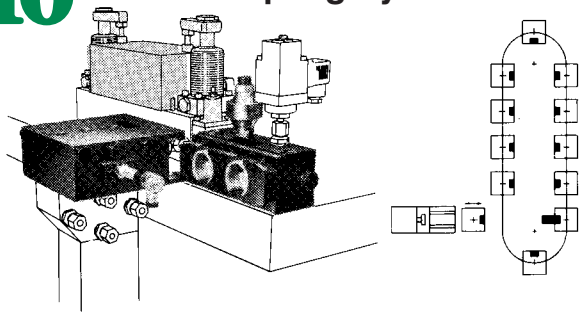

Power clamping on portable palletized fixtures is becoming quite common, yet presents some special challenges, such as maintaining full clamping pressure while the fixture is separated from its power source. We offer a wide choice of solutions, from rotary couplings, to manual pallet decouplers, to automatic coupling systems with programmable controllers.

11 Specials

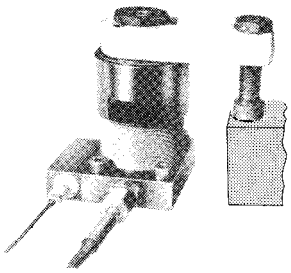

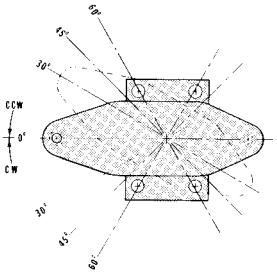

Because many tough clamping problems require modified or totally special components, we offer full specials-engineering capabilities. Our research and development staff can quickly design products to meet your special requirements. And unlike our competitors, we are a full-capability manufacturer, from start to finish, so lead times are always reasonable.

12 Engineering and Service Support

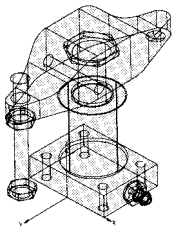

Drawing Files Available at www.carrlane.com

The combined resources of Carr Lane Roemheld Mfg. Co., Carr Lane Mfg. Co, and Roemheld GmbH bring you the world's finest technical support. Our capabilities include:
(1) Field engineers and regional managers helping our fine authorized distributors give you on-site assistance nationwide.
(2) Extensive CAD/CAM capabilities, both inhouse and for customer use, including a complete CAD library of catalog items available for users.
(3) A large stock of catalog items, plus quick-response manufacturing capabilities.
(4) Quality products that rarely need service, unlike those of our competitors, who regularly sell replacement parts and need repair stations throughout the country.

SWIFTSURE®

CARR LANE ROEMHELD MFG. CO.
Sales—Phone (314) 647-6200 Fax (314) 647-5736
Engineering—Phone 1-800-827-2526 Fax (636) 386-8034

Design Information

1. Operating Pressure

Although most SWIFTSURE components operate comfortably and safely at up to 7500 psi, we recommend selecting a standard "design pressure" of 6000-psi for workholding fixtures. The table on each clamp's catalog page shows 6000-psi forces in bold for quick reference.

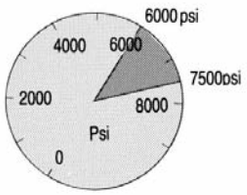

Designing at 6000 psi gives you most of the compactness benefits of high pressures, yet leaves a 25% reserve in case you find that you need additional holding force after building the fixture. Adjust up or down if necessary after checking the fixture. We recommend permanently labeling or stamping the fixture with the chosen operating pressure, for future reference. Operating at low pressures is somewhat a waste of our components' capabilities, but may occasionally be desirable with delicate workpieces. Whenever possible, stay with high pressures and use smaller clamps for better economy and minimum size. Minimum operating pressure is generally 1500 psi using an Electric Power Unit, or 2200 psi using an Air Power Unit. Work supports require at least 1500 psi. Please note, a few products in this catalog are limited to pressures lower than 7500 psi. To use these components in full-pressure systems, see page 93 for a Pressure Reducing Valve.

2. Machining Operations and Fixture Layout

While developing your fixture concept, consider the following factors wherever possible:

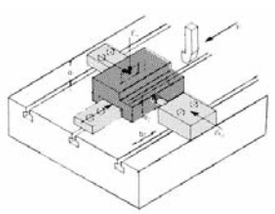

Use positive stops to resist machining forces, rather than relying just on clamp forces. With well-placed locators, you can use smaller clamps.

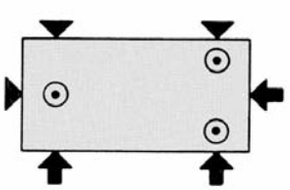

Choose clamping points that are backed up by solid stops or rests to resist clamping forces. Clamping forces can distort a workpiece unless counteracted by firm supports.

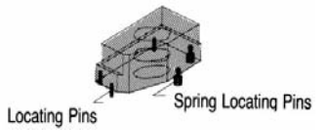

Evaluate workpiece-loading procedure and clamping sequence. Loading and clamping can be completely automatic, or involve some manual steps. To position the workpiece against locators, spring-loaded positioners (above) are often helpful. Sequence Valves, page 92, are extremely useful to position hydraulically with push clamps before clamping. Total positioning force should be 30-50% of the workpiece's weight to overcome friction.

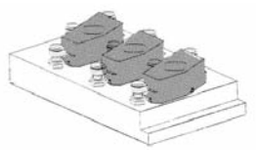

Decide how many parts you want to place on the fixture. For example, to place three workpieces on the above fixture, super-miniature Swing Clamps are necessary. With only one workpiece, just about any clamp would do.

3. Plumbing Options

Supplying fluid to hydraulic fixtures is not merely an afterthought. Fluid supply is an integral part of fixture design. The following Swing Clamp fixtures illustrate four distinct plumbing concepts.

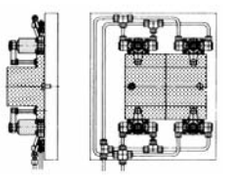

1. Tubing lines on top of fixture plate.
This is the oldest, most traditional method of supplying fluid to hydraulic clamps. Before manifold mounting, using tubing was about the only option available. Advantages; less base-plate machining is required; quick build time. Disadvantages: chips are easily trapped in tubing lines; a large base-plate area is required; exposed tubing is subject to damage.

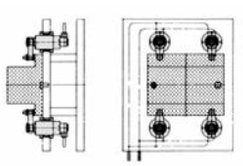

2. Tubing lines underneath fixture plate.
Running tubing lines below the working area is an improvement on option 1. Advantages: no chip traps in working area; more freedom to position clamps with tubing out of the way. Disadvantages: a large base-plate area is still required; more complicated fixture construction.

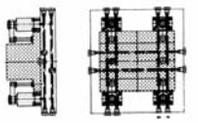

3. Manifold mounting, with O-ring ports.
This option uses passages drilled in the fixture to feed fluid directly to O-ring ports underneath the clamps. Advantages: more compact fixture size; no chip traps in working area; most economical construction. Disadvantages; gun-drilling is sometimes required; less freedom to mount clamps in odd positions.

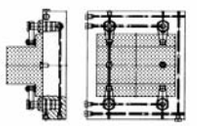

4. Cartridge-type manifold mounting.
Similar to option 3, except clamps are embedded in specially prepared, tapped mounting holes. Advantages: most compact fixture size; great freedom to position clamps in tight places; no chip traps in working area. Disadvantages: gundrilling is sometimes required; a thicker base plate is usually required (this is also an advantage because it makes the fixture more rigid).

4. Cutting Forces

An important step in most fixture designs is looking at the planned machining operations to estimate cutting forces on the workpiece, both magnitude and direction. Your "estimate" can be a rough guess based on experience, or a calculation based on machining data. One simple formula for force magnitude is based on the physical relationship:

$$Force = \frac{Power}{Velocity}$$

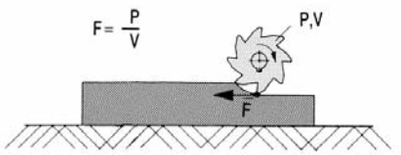

$$\text{Cutting force (lbs)} = \frac{\text{Heaviest-cut horsepower} \times \frac{\text{Machine efficiency}}{\%} \times 33{,}000}{\text{Cutting speed (sfpm)}}$$

Please note: heaviest-cut horsepower is not total machine horsepower, rather it is the maximum horsepower actually used during the machining cycle. Typical machine efficiency is roughly 75%. (.75). The number 33,000 is a units-conversion factor.
The above formula only calculates force magnitude, not direction. Cutting force can have X, Y, and/or Z components. Force direction (and magnitude) can vary drastically from the beginning, to the middle, to end of the cut.

Example

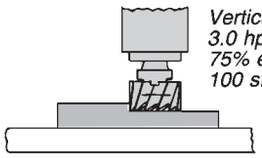

Vertical mill
3.0 hp heaviest cut
75% efficiency
100 sfpm cutting speed

$$\text{Cutting force} = \frac{3.0\text{ hp} \times .75 \times 33{,}000}{100\text{ sfpm}} = 743\text{ lbs}$$

Intuitively, force direction is virtually all horizontal. In this example (negligible z-axis component). Direction varies between the x and y axes as the cut progresses.

5. Clamp Forces / Sizes

Clamping-force calculations can be quite complicated. Sometimes an approximate method is good enough. See table below for how much clamping force is available from manual clamp straps of various sizes (with a 2-to-1 clamping-force ratio) to compare with power-clamp forces.

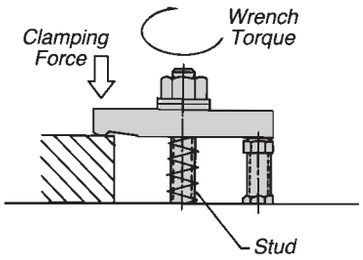

Stud Size	Recommended Torque* (ft-lbs)	Clamping Force (lbs)
1/4-20	4	500
5/16-18	9	900
3/8-16	16	1300
1/2-13	38	2300
5/8-11	77	3700
3/4-10	138	5500

* Clean, dry clamping stud torqued to approximately 33% of its 100,000 psi yield strength (2:1 lever ratio).

You can also calculate required clamping forces based on calculated cutting force. A simplified example appears below, with cutting force entirely horizontal, and no workpiece stops (frictional force resists the entire cutting force).

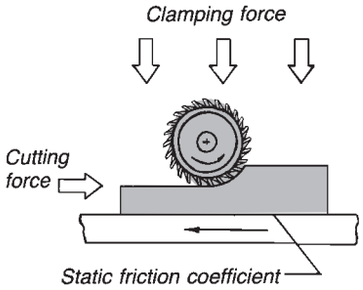

$$\text{Clamping force (lbs)} = \frac{\text{Cutting force (lbs)}}{\text{Static friction coefficient}} \times \text{Safety factor (usually 2)}$$

Contact surfaces	Friction coefficent (Dry)	Friction coefficent (Dry)
Steel on steel	.15	.12
Steel on cast iron	.19	.10
Cast iron on cast iron	.30	.19

With workpiece stops and multi-direction forces, calculations become much more complicated. To simplify somewhat, determine the worst-case force situation intuitively, then treat the calculation as a two-dimensional static-mechanics problem (using a free-body diagram). In the example below, cutting force is already known to be 1800 lbs from previous calculations. The workpiece weighs 1500 lbs. Unknown forces are:

F_R = Total force from all clamps on right side
F_L = Total force from all clamps on left side
R_1 = Horizontal reaction force from fixed stop
R_2 = Vertical reaction force from fixed stop
R_3 = Vertical reaction force on right side
N = Normal force = $F_L + F_R + 1500$
μ = Coefficient of friction = .19

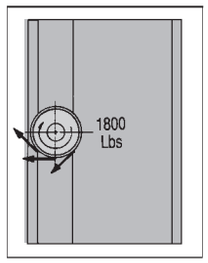

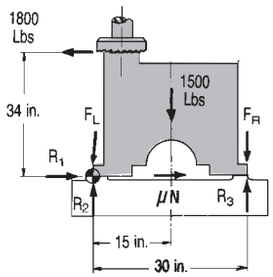

The equations below solve for unknown forces assuming that for a static condition:

1. The sum of forces in the x direction must equal zero
2. The sum of forces in the y direction must equal zero
3. The sum of moments about any point must equal zero

At first glance, the example above looks "statically indeterminate," i.e. there are 5 variables and only 3 equations. But for the minimum required clamping force, R_3 would be zero (workpiece barely touching) and F_L would be zero (there is no tendency to lift on the left side). Now with only 3 variables, we can solve:

$$\Sigma F_X = 0 = -1800 + R_1 + (.19)(1500 + F_R)$$
$$\Sigma F_y = 0 = R_2 - 1500 - F_R$$
$$\Sigma M_{\oplus} = 0 = (34)(1800) - (15)(1500) - (30)(F_R)$$

Solving for the variables,

F_R = 1290 lbs
R_1 = 1270 lbs
R_2 = 2790 lbs

In other words, the combined force from all clamps on the right side must be greater than 1290 lbs. We recommend a 2-to-1 safety factor (2580 lbs). Even though F_L (the combined force from all clamps on the left side) equals zero, a small clamping force may be desirable to prevent vibration.

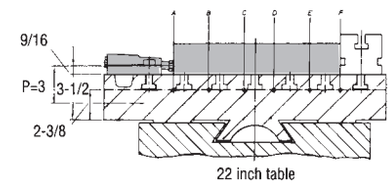

Too much clamping force can be as bad as too little. Excess force can cause fixture and machine-table distortion or even damage. Even a small hydraulic clamp can generate tremendous stresses (S).

$$S = P \times \left(1 - \frac{1}{1 + \frac{FL^2}{2\,EI}}\right)$$

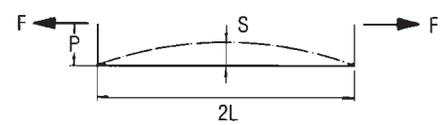

In the example above, three 4560-lb Edge Clamps cause some machine-table bending. Using static beam-binding calculations, maximum distortion, at point D, is about .0006 inches (probably acceptable). However, if the clamping point were higher off the machine table (P dimension), distortion would be much greater. Higher clamps would require adding an intermediate fixture plate to increase table rigidity.

6. Work Supporting

Unlike clamps, work supports do not actually exert force on a workpiece. After adjusting to the part, work supports essentially become fixed supports or rests. A work support's load capacity increases proportionally as fluid pressure rises:

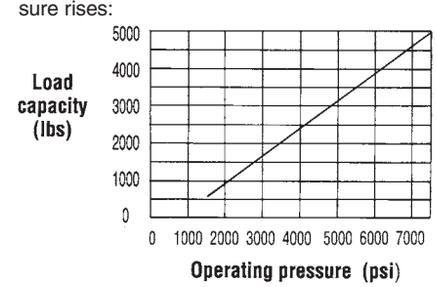

Choose enough load capacity to resist: (1) machining forces; (2) workpiece weight; (3) clamping forces not resisted by fixed stops.

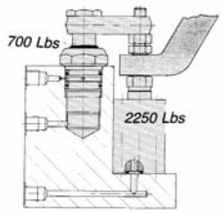

When supporting underneath a clamp, as in the example above, load capacity should be substantially greater than clamping force. Not only must the support resist static clamping force, it must resist dynamic load too (the "hammering" due to clamping-arm momentum). We recommend a load capacity of at least 2 times the clamping force. Another factor when clamping over a work support is that the clamp may build up force faster than the support builds up load capacity. To avoid this, use a sequence valve to delay clamping until load capacity builds up.

7. Single Acting vs. Double Acting

The return side of single acting elements, with a few exceptions (small work supports), require breather ports on the return side, and when used in systems with high flow or pressurized cutting fluids/coolants, great care must be taken to be sure that these fluids do not enter the return side of the clamps. It is highly recommended that double acting elements be used in such systems, thus eliminating the problem, and resultant machine down time. Double acting clamps should also be used in systems having an automatic load/unload, so that all functions can easily be coordinated.

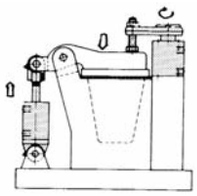

1. Moving linkages or retracting heavy loads. For a quick, positive return when weight is too heavy for spring return.

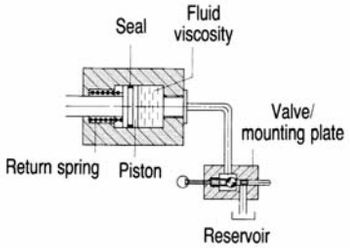

2. Large fixtures with long tubing runs or flow restrictions. Return speed is adversely affected by: (1) pressure drop in tubing and hoses; (2) pressure drop in valves; (3) high fluid viscosity, especially at lower temperatures; (4) frictional force at piston seals, especially when clamped for an extended time, which displaces the fluid film on cylinder walls.

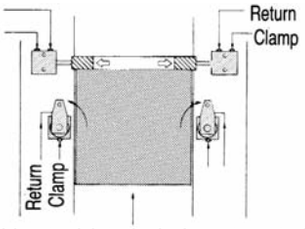

3. Machine-tool interlock. In automated systems where timing and synchronization are important, double-acting clamps are the best choice. By installing pressure switches in both clamping and return lines, a machine controller knows exact clamp status at all times.

8. Clamping Time

Hydraulic clamping is usually fast, but not instantaneous. To estimate clamping time, consider the two phases of clamping:

1. Extending time, under low-pressure free flow
2. Pressure-building time

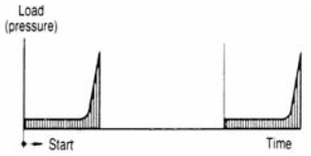

Extending time is fairly easy to calculate, knowing fluid required by each clamp and the power units flow rate, using the formula below. One obvious way to reduce clamping time is to set clamps as close to the workpiece at possible, to use as little stroke as possible.

$$\text{Extend time (sec)} = \frac{\text{Maximum fluid req'd for all clamps (cu.in.)} \times \text{Portion of stroke used (usually 1/2)} \times 60}{\text{Power Unit flow rate (cu. in./.min.)}}$$

After extending, an additional volume of fluid must be pumped into the system to build pressure. This is due mainly to:

1. Compressibility of the hydraulic fluid (add about 4% of total system volume to build to 7500 psi)
2. Volume expansion of hydraulic hoses (.066 cu.in. per foot)
3. Charging an accumulator, if used

By calculating fluid required for each of the above factors, you can estimate pressure-building time. Using Sequence Valves lengthens clamping time, because each sequence step requires extending time and pressure-building time. To reduce clamping time, set Sequence-Valve trigger pressure as low as possible. With multiple Sequence Valves, set trigger-pressure differences at their minimum allowables value.

9. Other Hydraulic Considerations

The basis of hydraulic clamping systems is "Pascal's Law", which says that if pressure is applied to a static fluid that is completely enclosed, that pressure is transmitted equally in all directions:

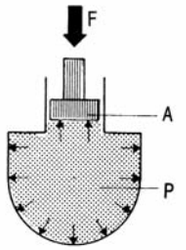

This principle is used to transmit force to remote locations, via hose, tubing, or drilled passages. When hydraulic pressure acts on a clamp's piston area, it generates external force according to the physical relationship F=P x A:

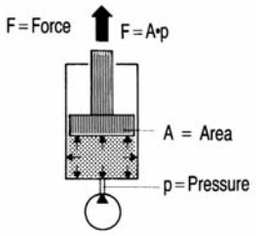

Clamping with hydraulics causes some strange effects not occurring with manual clamps. One such phenomenon is fluid shifting between equal-force opposing clamps.
In the example above, the two opposed clamps

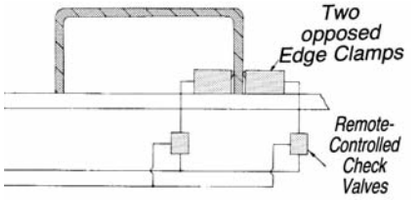

allow the workpiece to float between them. Pushing on one clamp encounters no resistance because fluid just shifts to the opposing clamp (if the check valves were not present). Do not let equal-force clamps oppose each other without Remote-Controlled Check Valves.
Another strange effect is pressure change due to temperature change of a closed

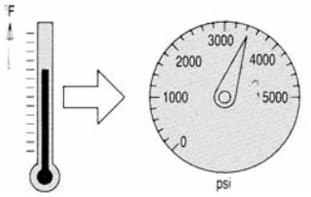

system. In fact, pressure changes about 80 psi per 1° F! Be careful of excessive temperature changes, especially increases. Use a Pressure-Relief Valve for safety.

10. Hydraulic Symbols and Circuit Diagrams

Hydraulic symbols and diagrams area a useful "shorthand" method of describing how a clamping circuit works without detailed drawings. The following pages show two circuit examples, and a summary listing of hydraulic symbols.

Example Hydraulic Circuit Diagrams

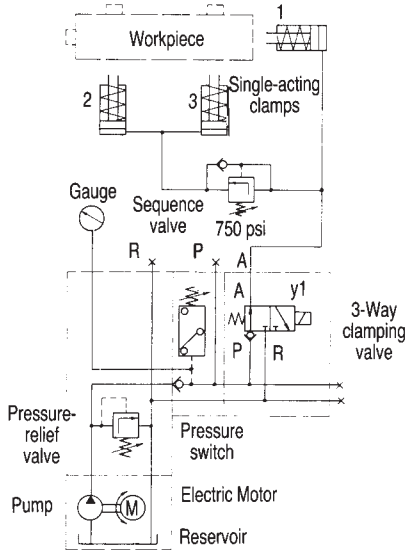

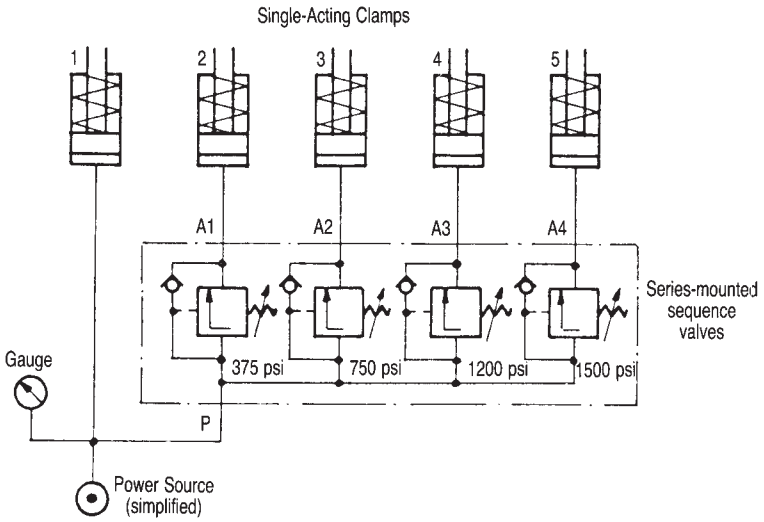

Clamp & Cylinder Symbols

	Push clamp or cylinder, single acting
	Push clamp or cylinder, double acting
	Pull clamp, single acting
	Swing clamp, single acting
	Swing clamp, double acting
	Extending clamp, single acting
	Extending clamp, double acting
	Work support, spring extended
	Work support, fluid advanced
	Work support, air advanced

Power Source Symbols

	Power source (simplified)
	Electric Power unit, consisting of a fluid reservoir, pump, electric motor, pressure-relief valve, pressure switch, clamping valve, and gauge.
M	Electric motor, showing direction of rotation
	Constant displacement pump
	Variable displacement pump
	Fluid reservoir
	Fluid filter

Valve Symbols

A 0 1 P R	3/2 directional-control valve (3-way, 2-position), complete symbol with solenoid operator and spring return (normally open)
0 1	Boxes showing valve positions (two). For valves with spring return, the neutral position is shown at left (0).
0 1 A P R	Inlet and outlet connections are drawn at the neutral-position box, and are designed by capital letters: P = Inlet pressure from pump A,B,C… = Operating connections R,S,T = Outlet return (tank) L = Leakage line Z,Y,Z = Control Lines

Design Information

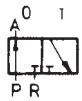	Flow lines and directions are shown in each valve-position box. Lines show flow path, arrows show flow direction. Shutoffs are designated by capped-off lines inside the box.
	Valves can be normally open, as shown on top (clamped in neutral position), or normally closed, as shown on bottom (unclamped in neutral position)
	Valve operators are shown outside the boxes
	Solenoid operated
	Spring operated (or returned)
	Manually operated
	Detent position
	Lever operated
	Foot-pedal operated
	Push-button operated
	Cam-roller operated
	Plunger operated
	Air-pilot operated
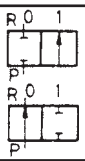	2/2 directional-control valve, normally closed on top, normally open below.
	4/2 directional-control valve, for double-acting clamps
	Sequence valve, with unrestricted return line
	Pressure-reducing valve, with unrestricted return line

	Check valve
	Remote-controlled check valve (pilot operated)
	Shutoff valve
	Pressure-relief valve
	Flow control valve, with unrestricted return line

Accessory Symbols

	Operating line, pressure or return
	Control line, for transmitting control/pilot signals
	Leakage line, for carrying away fluid leakage
	Flexible line, such as hydraulic hose
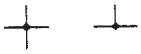	Line connection
	Line crossing, without connection
	Pressure-connection point, such as a port
	Bleeding point
	Quick disconnect, coupled
	Quick disconnect, decoupled
	Rotary coupling (2 passage shown)
	Accumulator
	Gage
	Pressure switch
	Air filter/regulator/lubricator

Recommended Precautions For The Designer, Builder & Operator

IMPORTANT: READ THIS SHEET CAREFULLY BEFORE OPERATING.

SWIFTSURE power workholding components are high quality products, engineered and manufactured to give you long, dependable and safe performance. For proper and safe operation, please follow all instructions on this sheet. Save these instructions for future reference.

SERVICE NOTE: Most SWIFTSURE components are 100% individually tested for proper operation before leaving the factory. Please recheck these instructions if your new unit does not work properly. Should any component ever need service, please contact the factory. Do not disassemble the unit yourself — many are not user serviceable. SWIFTSURE components incorporate advanced sealing technologies that eliminate the need for routine seal replacement.

TUBING: Use only *steel* tubing as specified in the SWIFTSURE catalog: Seamless steel tubing, C1010, cold drawn, fully annealed, 5/16 OD, .065 wall thickness (Certified to 37,500 psi burst). Follow all tubing installation guidelines. We highly recommend the CLR-300-TL flaring tool to effectively flare this heavy-walled tubing.

HOSES: Use only hydraulic hoses as specified in the SWIFTSURE catalog: 1/4 ID hydraulic hose, 30,000 psi min. burst pressure, (2) female swivel-nut ends, 5/16 JIC 37° flare.

FLUID CONNECTIONS: Connect fluid lines to the 5/16 JIC 37° flare male connection on each clamp (two for double-acting clamps). This fitting accepts either 5/16 OD 37° flared tubing, or a hydraulic hose with 5/16 JIC 37° swivel nuts (female) at each end. **Do not screw NPT pipe fittings into SWIFTSURE components, or use NPT fittings anywhere in a workholding system.** SWIFTSURE fittings are 5/16 JIC 37°. These fittings offer a positive metal-to-metal seal. **Do not use teflon tape or sealant.** Do not use fitting sizes other than 5/16. This size is ideal for workholding fixtures. Smaller tube sizes have poor flow rates. Larger tube sizes are not readily available with sufficient wall thickness for high pressure operation, and are difficult to flare. Never use brass fittings.

OPERATING PRESSURE: Do not operate components above their maximum allowable fluid pressure stated in the SWIFTSURE catalog (7500 psi for most components). Always use a gauge to monitor fluid pressure. Locate pressure gauge where the machine operator can easily read it. Often, placing it directly on the machining fixture is best. All SWIFTSURE Electric and Air Power units include a fluid-pressure gauge.

ADDITIONAL SAFETY PRECAUTIONS: If losing fluid pressure (due to a cut hose, etc.) would pose any danger to the operator, install a pressure switch, or other pressure-monitoring device, to monitor system pressure. This switch electrically signals the machine tool to shut down if fluid pressure is inadequate.

COMPONENT COMPATIBILITY: Do not mix non-SWIFTSURE components into a SWIFTSURE power-workholding circuit. Other brands are not leakfree, and their performance may be unpredictable.

HYDRAULIC FLUID: Always use absolutely clean, fresh hydraulic fluid. Fill the fluid under absolutely clean conditions. **Almost all service problems are caused by dirty, contaminated fluid. Fluid must be clean to 10 micron or better nominal filtration.** Use only the following DIN 51524, HLP, ISO Grade fluids to preserve your warranty:

Oil Temp. [°C]	Designation [as per DIN 51524]	Application
10-40	HLP 22	Power units with poppet valves or single acting circuits
15-50	HLP 32	Mechanical pumps or double acting circuits

See also CLR-000-V, high pressure in-line filter.

BLEEDING AIR: Usually components will bleed trapped air automatically when you clamp and unclamp them several times. If manual bleeding is still necessary, bleed at an elevated tube or hose connection, farthest from the power source. With the clamps actuated (system pressurized) slightly loosen the connection. After fluid seeps out for a few seconds, retighten. Repeat at other connections if necessary. After bleeding, unclamp (depressurize system) and refill the power sources fluid reservoir.

CAUTION: ALWAYS KEEP HANDS CLEAR OF POWER CLAMPS DURING OPERATION. THESE COMPONENTS EXERT VERY HIGH FORCES AND CAN CAUSE SERIOUS INJURY. DISCONNECT POWER SOURCE BEFORE CONNECTING, DISCONNECTING, ADJUSTING, OR OTHERWISE HANDLING COMPONENTS.

FLOW CONTROL: When using Swing Clamps, Extending Clamps, or Fluid-Advanced Work Supports with a high-flow-rate power source, make sure the fluid flow rate to each component is under the maximum stated in the catalog. Otherwise the components may not activate properly. See the SWIFTSURE catalog for flow control valves.

FLOOD COOLANT: Work Supports and Swing Clamps have air vents protected by sintered-metal filters. These vents could draw in coolant if the components are submerged. To prevent this, attach an air vent tube via the tapped hole provided (see each component's catalog page for air-vent-fitting part numbers).

PRESS-TOOL CLAMPING: Clamping die sets on presses require different components and safety devices than found in our SWIFTSURE Power Workholding catalog. Contact factory for press-tool clamping systems.

MOUNTING: Carefully follow mounting instructions as shown in the SWIFTSURE catalog for each component.

CARR LANE ROEMHELD MFG. CO.

Sales—Phone (314) 647-6200 Fax (314) 647-5736
Engineering—Phone 1-800-827-2526 Fax (636) 386-8034

Down-Holding Clamps

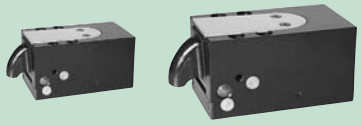

Flat Profile
page 13.1

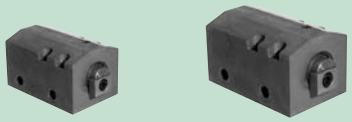

Block Extending Clamp
See Website

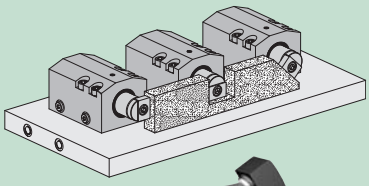

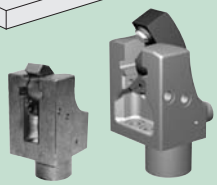

Slide Pivot Clamps
page 13.5

Extending Clamps

Arm extends forward to clamp, then retracts again for clear loading when unclamped. Ideal for clamping in narrow recesses.

Flat Profile clamps extends in a smooth, continuous radial motion. The arm retracts fully for loading. Choice of swivel-pad arm or spherical-nose arm.

Block Extending Clamps offer maximum free machining space. Clamping can be made in apertures or bored holes. The clamping element in hermetically sealed to the interior, and compensates transverse forces at the clamping point.

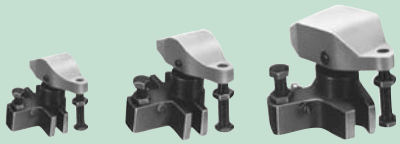

Low Profile
page 17

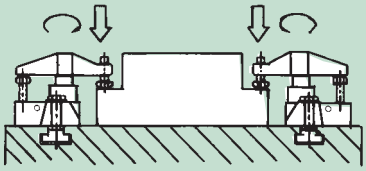

Flange Base
pages 18-19

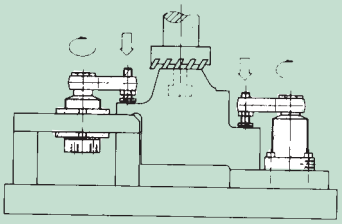

All Threaded
pages 18-19

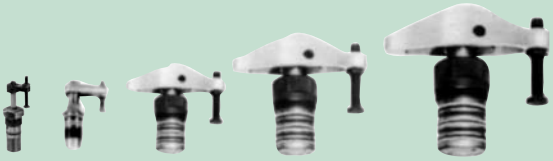

Threaded Body
pages 20-22

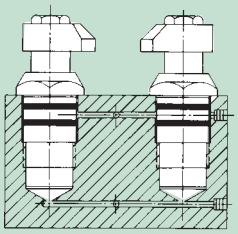

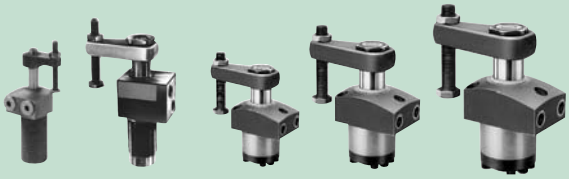

Top Flange
pages 19.1

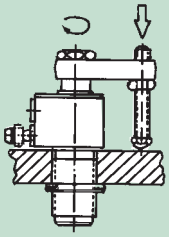

Swing Clamps

Arm swings 90 degrees then clamps down. Ideal when you need maximum reach and clearance for loading/unloading. Proprietary safety-clutch mechanism prevents damage if the clamping arm strikes an unexpected object during its swing.

Low profile swing clamp sits very low on the fixture, and is completely self-contained. Easy to mount, even directly on machine tables or pallets.

Flange base swing clamp is good for taller workpieces. Very popular because it takes up little area on the fixture. Mount either on top of fixture or through fixture plate.

All threaded swing clamp is well-suited for through-hole mounting. Fittings are underneath clamp to keep plumbing away from workpiece area.

Threaded body swing clamp for manifold mounting is the most compact swing clamp available, especially in super-miniature size. Allows mounting without external plumbing.

Top Flange swing clamp has high-level fittings. Mounts in a tapped or bored hole, with plumbing running above the fixture plate or using manifold mounting.

Down-Holding Clamps

pages 26-27

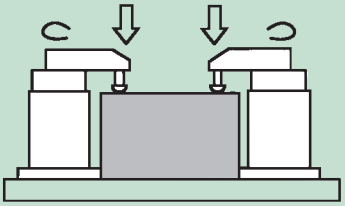

Air-Powered Swing Clamps

Ideal when only light clamping force is required. Powered by low-pressure shop air.

Low Profile

page 29

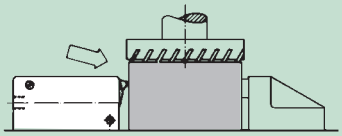

Edge Clamps

Nose advances to grip side of workpiece. Clamping thrust is both forward and down. Ideal when clamping from above would interfere with machining.

Low profile edge clamp sits below cutter path yet still clamps high on workpiece...important for solid, vibration-free clamping.

Extending Clamps

7500 psi max
Double acting only

Flat Profile

- **Great new design provides excellent protection against flood coolant, chips, and welding spatter**
- **Pivoting arm retracts completely for loading clearance**
- **Compact, flat design with choice of swivel pad or solid spherical nose**
- **All units can use standard fittings or manifold mounting**
- **All units are ready for optional position sensing**
- **Choice of 2 sizes**

CLAMPING ACTION: Double acting only. Applying fluid pressure to the A (clamping) port advances the piston, which in turn advances the clamping arm via a connecting rod. Switching pressure to the B (return) port positively retracts the piston and the attached clamping arm.

MOUNTING: Fasten using four grade-8 socket-head cap screws. Mount in any position, horizontal or vertical. Two 1/4 BSPP fluid ports (A&B).

OPTIONAL MANIFOLD MOUNTING: Fluid can be supplied through the fixture base via the A port and B port underneath the clamp. Connect using two CLR-9210-132-F connecting inserts, after removing the plugs installed in the bottom ports. Install two CLR-810-F port plugs in the 1/4 BSPP ports.

CLAMPING ARM: Choice of two arm types in each size, swivel pad or solid spherical nose. The arm is designed to resist side forces at the clamping point.

OPTIONAL POSITION SENSING: All units are ready to install position sensing. Proximity switches can be installed in either the right or left side. Order two CLR-3829-098-PM inductive proximity switches, and two CLR-3829-099-PM right-angle plugs with cable.

DESIGN CONSIDERATIONS: Although these Extending Clamps have a large clamping range, the ideal clamping height in most cases is h3, because arm motion is totally vertical at that height. This avoids applying any side force to the workpiece during clamping.

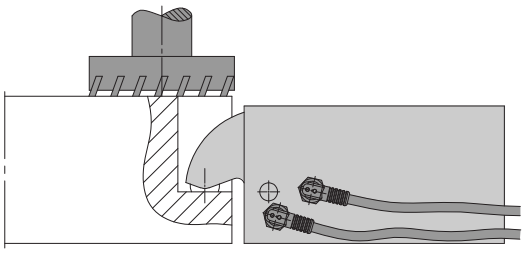

These extending clamps have an extremely low profile for excellent machining clearance.

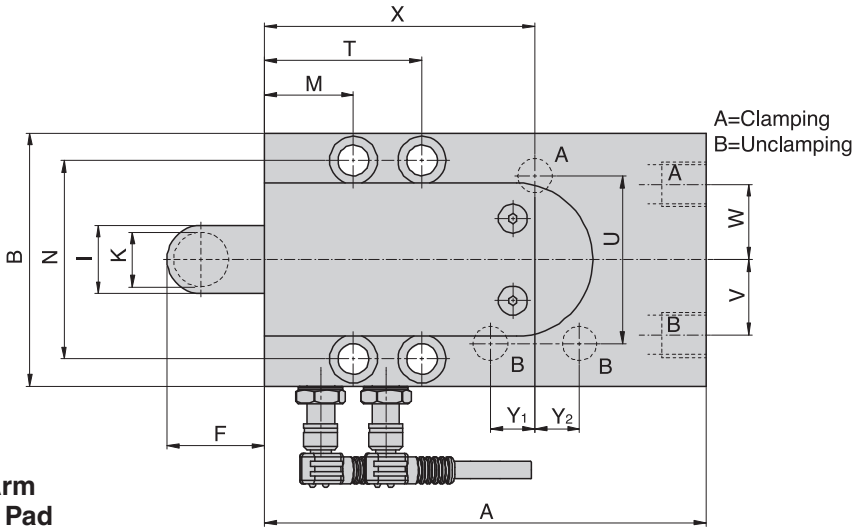

Pivoting Arm with Swivel Pad

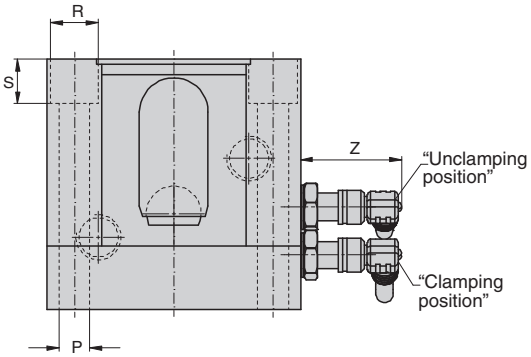

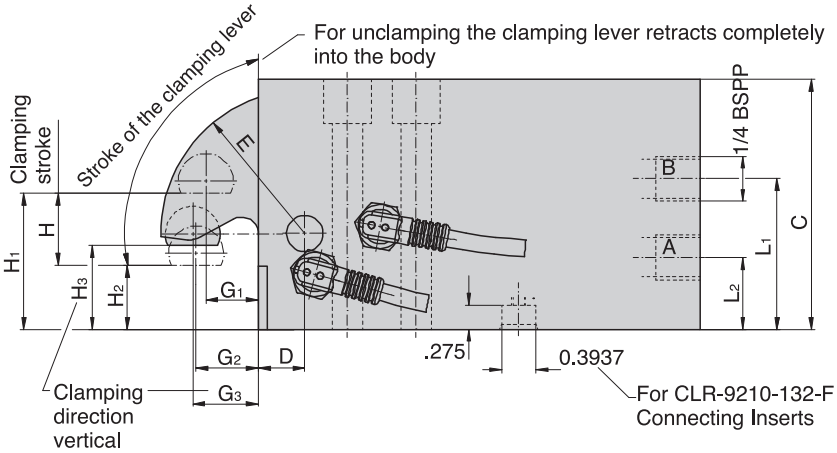

SWIFTSURE®

CARR LANE ROEMHELD MFG. CO.

Sales—Phone (314) 647-6200 Fax (314) 647-5736
Engineering—Phone 1-800-827-2526 Fax (636) 386-8034

Extending Clamps

7500 psi max
Double acting only

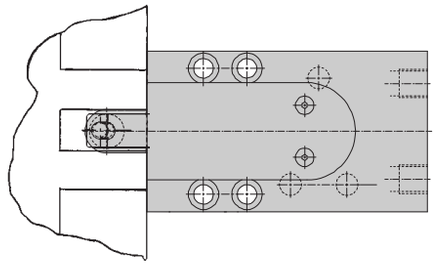

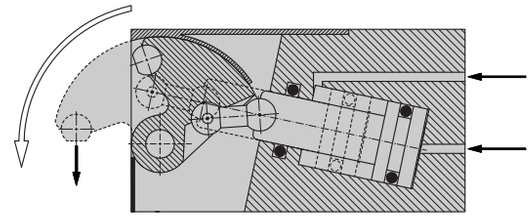

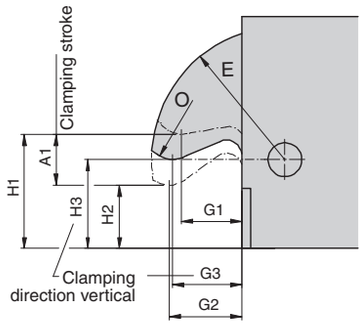

Pivoting Arm with Spherical Nose

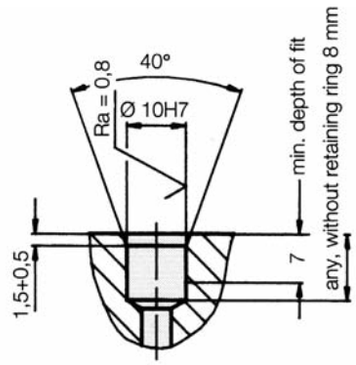

Hole Pattern for CLR-9210-132-F (mm)

Clamping force (lbs) H3/H1	7500 psi	3400*	3200*	5500*	5500*
	6000 psi	2500/2700	2300/2600	4100/4400	4000/4400
	5000 psi	2100/2250	1900/2200	3400/3700	3300/3600
	4000 psi	1700/1800	1500/1700	2700/2900	2600/2900
	3000 psi	1250/1350	1150/1300	2000/2200	2000/2200
Arm Type		Swivel Pad	Spherical Nose	Swivel Pad	Spherical Nose
Clamping stroke (A_1)		.35	.47	.39	.63
Fluid required (cu.in.)		.34	.58	.75	1.23
Max. operating pressure (psi)		7500	7500	7500	7500
A		4.27	4.27	5.08	5.08
B		2.36	2.36	2.95	2.95
C		2.30	2.30	2.89	2.89
D		.394	.394	.531	.531
E		1.34	1.34	1.65	1.65
F		.94	.94	1.12	1.12
G_1		.55	.63	.69	.71
G_2		.63	.79	.75	.89
G_3		.63	.77	.75	.87
H1 (Max. clamping height)		1.10	1.18	1.36	1.50
H2 (Min. clamping height)		.75	.71	.96	.87
H3 (Vertical clamping direction)		.79	.83	1.02	1.10
I		.59	.59	.79	.79
K dia		.47	—	.63	—
L_1		1.77	1.77	1.73	1.73
L_2		1.18	1.18	.83	.83
M		.807	.807	1.024	1.024
N		1.850	1.850	2.283	2.283
O		—	.24	—	.31
P dia		.260	.260	.335	.335
R dia		.433	.433	.531	.531
S		.47	.47	.51	.51
T		1.594	1.594	1.811	1.811
U±.0008		1.6535	1.6535	1.7323	1.7323
V		.75	.75	.87	.87
W		.75	.75	0	0
X		3.012	3.012	2.598	2.598
Y1±.0008		.5118	.5118	—	—
Y2±.0008		—	—	.3937	.3937
Z		1.26	1.26	1.14	1.14
Part No.		**CLR-1824-202-EXD**	**CLR-1824-201-EXD**	**CLR-1824-262-EXD**	**CLR-1824-261-EXD**

*Clamping force with nose at H1 clamping height.

Slide Pivot Clamp

7500 psi max
Double acting

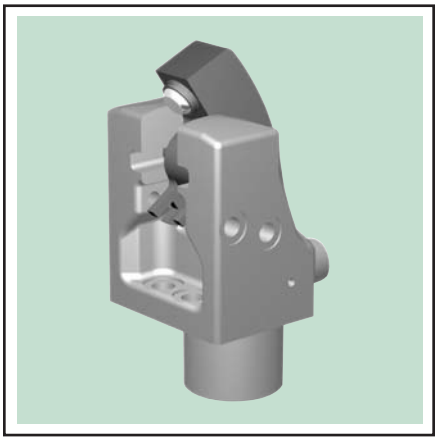

- **3 sizes**
- **High clamping force**
- **Minimum dimensions**
- **High efficiency**
- **Minimum transverse forces act on the workpiece in the clamping area**
- **Increased rigidity allows compensation of transverse forces at the the clamping point**
- **Unimpeded loading and unloading of the fixture**
- **Inductive or pneumatic monitoring of the clamping lever available as accessory**
- **Monitoring of the unclamping position and the usable clamping range is possible**
- **2 different clamping levers are available**
- **Clamping lever can be swivelled into small recesses**
- **Partially immersed mounting of the body**
- **Oil supply alternatively via fittings or drilled channels**

DESCRIPTION: In the case of the slide pivot clamp the piston force is deviated by 180° by the clamping lever and is available as clamping force with virtually no loss of efficiency. Kinematics of the slide pivot clamp allow sliding back of the clamping lever during unclamping for unimpeded insertion of the workpieces.

The clamping lever is available with smooth swivel contact bolt and in a longer version with dome-head contour.

Position of the clamping lever can be monitored by inductive proximity switches or pneumatic jets.

The pivot slide clamp can be installed immersed up to the flange surface in a hole of the fixture body or via intermediate plates which are available as an accessory. For both solutions there is the possibility to supply the hydraulic oil not only by fitting connection but also via drilled channels in the fixture body.

IMPORTANT NOTES: The clamping lever must not be impeded during swivelling movement. The slots of the sliding pad have to be checked from time to time with regard to contamination by swarf and cleaned, if required.

APPLICATION: The slide pivot clamp has in relation to its base a very high clamping force. The clamps are particularly suitable for clamping tasks on machines with high performance and reduced space availability on the fixture. The workpieces can be inserted from above without any impediments. A clamping recess a little bit wider than the clamping level is sufficient as clamping surface. This characteristic indicates their use for clamping or aluminum parts, which are very sensitive against deformation, with correspondingly reduced oil pressure.

Function

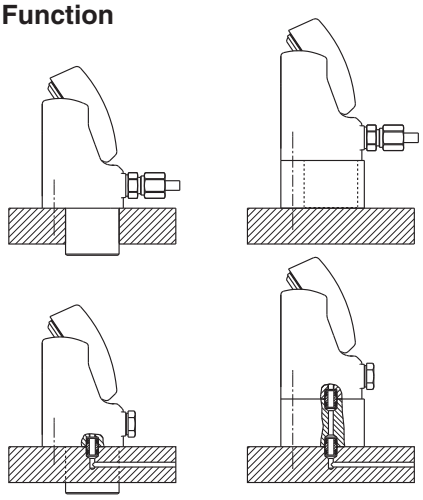

Installation possibilities

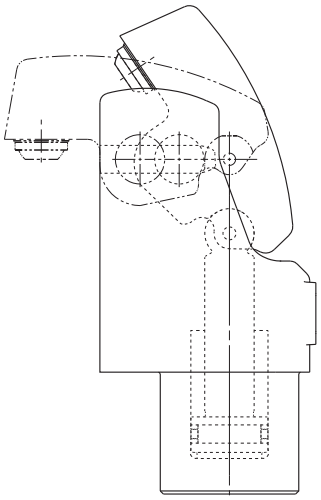

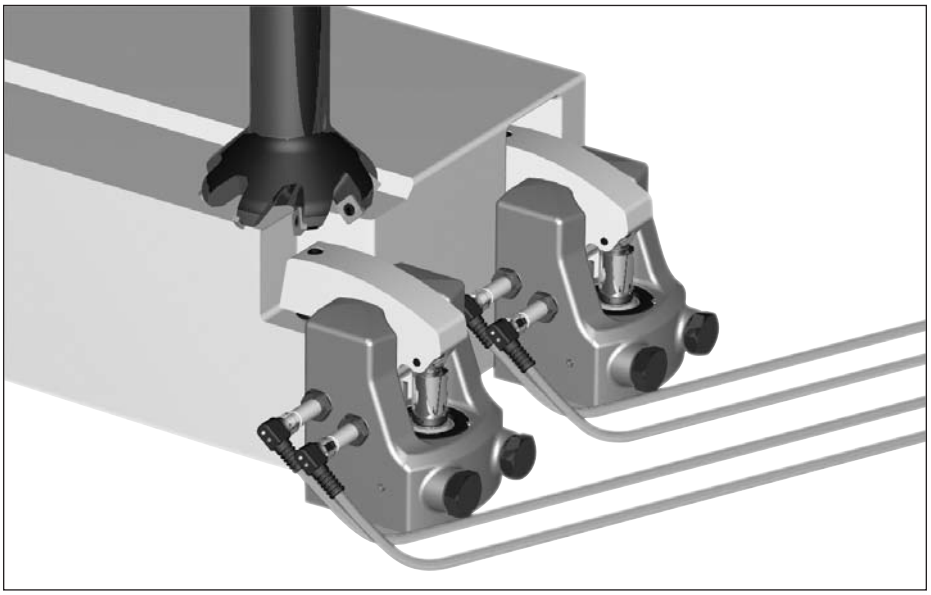

CARR LANE ROEMHELD MFG. CO.
Sales—Phone (314) 647-6200 Fax (314) 647-5736
Engineering—Phone 1-800-827-2526 Fax (636) 386-8034

Slide Pivot Clamp

7500 psi max
Double acting

Variant: long clamping lever

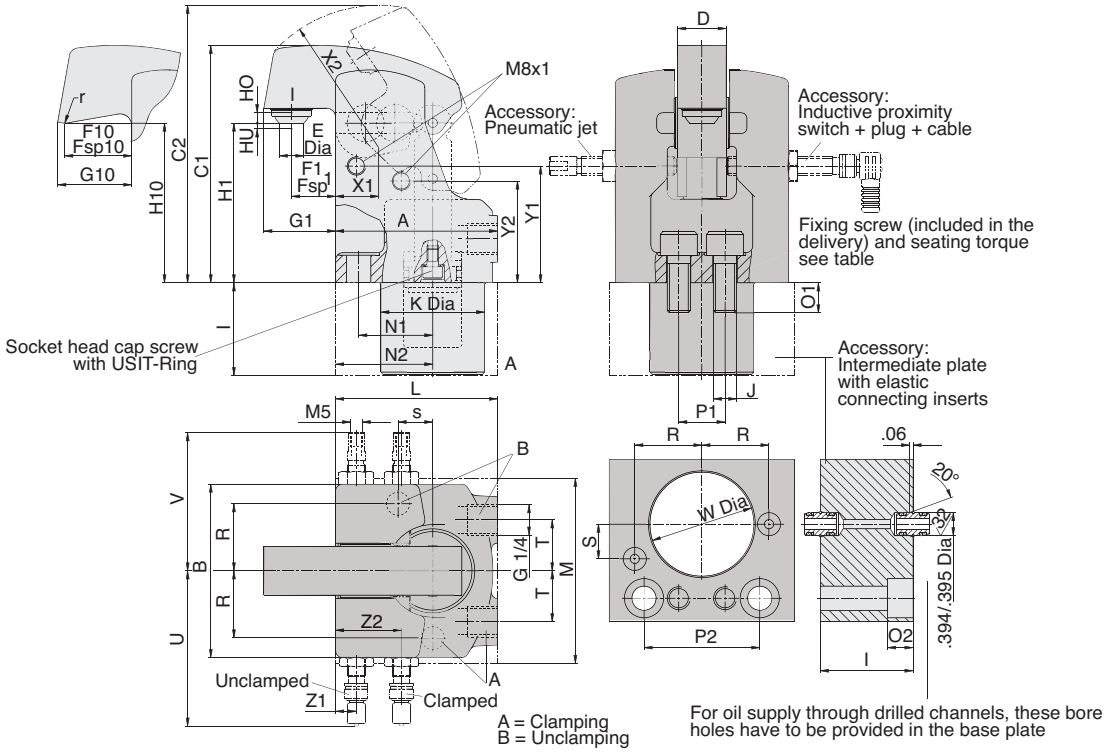

Clamping force Fsp1/Fsp10 (lbs)	7500 psi	4700/3500	7400/5300	11600/8600
	6000 psi	3700/2800	6000/4300	9300/6900
	5000 psi	3100/2300	5000/3600	7800/5700
	4000 psi	2500/1900	4000/2900	6300/4600
	3000 psi	1900/1400	3000/2200	4700/3400
Oil volume clamping (cu. in.)		0.85	1.5	3
Oil volume unclamping (cu. in.)		0.5	1	2
A		2.76	3.31	3.9
B		2.95	3.82	4.45
C_1/C_2		4.06/4.72	4.72/5.57	5.91/6.89
D		0.83	1.14	1.3
E Dia		0.39	0.39	0.79
F_1/F_{10}		.75/1.14	.79/1.34	.98/1.57
G_1/G_{10}		1.22/1.26	1.42/1.46	1.73/1.77
H_1/H_{10}		2.72	3.21	4
ho/hu, upper/lower clamping point		.18/.1	.2/.12	.24/.14
I		1.57	1.57	1.57
K Dia		1.77	2.16	2.36
L		2.76	3.46	3.94
M		3.15	3.94	4.72
J, socket head cap screw/torque (ft. lbs.)		M10/64	M12/111	M16/273
N_1/N_2		1.26/1.65	1.54/1.97	1.85/2.44
O_1/O_2		.51/.43	.59/.51	.63/.67
P_1/P_2		.787/1.969	1.181/2.250	1.102/2.835
R		1.142/1.143	1.378/1.379	1.496/1.497
r		0.31	0.39	0.47
S		.591/.592	.787/.788	.787/.788
T		0.87	1.02	1.38
U_1 approx.		3.07	3.23	3.7
V_1 approx.		2.6	2.76	2.83
W Dia		1.772/1.776	2.165/2.169	2.362/2.366
X_1/X_2		0.74/2.42	0.87/2.76	1.10/3.46
Y_1/Y_2		1.99/1.73	2.32/2.24	2.87/2.68
Z_1/Z_2		0.35/1.12	.35/1.30	.37/1.46
Part No., with swivel contact bolt		**CLR-1824-060-EXD**	**CLR-1824-110-EXD**	**CLR-1824-160-EXD**
Part No., with long clamping lever		**CLR-1824-080-EXD**	**CLR-1824-130-EXD**	**CLR-1824-180-EXD**

Accessories

Port Plug 1/4 BSPP	**CLR-810-F**
Elastic connecting insert 2 req. without intermediate plate, or 4 req. with intermediate plate	**CLR-9210-132-F**
Inductive proximity switch	**CLR-3829-164-PM**
Plug + cable	**CLR-3829-099-PM**
Pneumatic jet	**CLR-3612-020-EXA**
Lock Nut	**CLR-3301-566-EXA**
Intermediate plate for CLR-1824-060-EXD & CLR-1824-080-EXD	**CLR-3456-384-EXA**
Socket head cap screw M10x45	**CLR-3300-253-EXA**
Intermediate plate for CLR-1824-110-EXD & CLR-130-EXD	**CLR-3456-385-EXA**
Socket head cap screw M12x45	**CLR-3300-765-EXA**
Intermediate plate for CLR-1824-160-EXD & CLR-180-EXD	**CLR-3456-386-EXA**
Socket head cap screw M16x50	**CLR-3300-264-EXA**

CARR LANE ROEMHELD MFG. CO.
Sales—Phone (314) 647-6200 Fax (314) 647-5736
Engineering—Phone 1-800-827-2526 Fax (636) 386-8034

Swing Clamps

7500 psi max
Single acting

Low profile

- **Arm swings clear for easy loading**
- **Very low and compact**
- **Unique safety clutch prevents damage if arm strikes an object during swing**
- **Fast, totally dependable spring return**
- **Choice of 3 sizes**

CLAMPING ACTION: Fluid pressure swings arm 90° over workpiece then clamps down. Spring return lifts arm then swings it back 90° for loading/unloading. Choose either clockwise or counterclockwise rotation to clamping position.

DESIGN CONSIDERATIONS: The clamping arm must go through its full swing to operate properly. Stopping the arm short by obstructing it could possibly cause damage. Use low operating pressure during initial setting.

CLAMPING ARM: For half arms, special arms, and other modifications, see page 25. When using half arms reduce operating pressure to 3000 PSIG.

FLUID CONNECTIONS: Male 37°. Connect tubing/hose to either side of clamp. If desired, feed fluid in one side and out the other side. May require a simple flow-control valve (page 98) if fixture contains only a few small clamps and is powered by a high-flow-rate power source. See power source pages to check. Do not use NPT fittings.

CONSTRUCTION: Sturdy helical-cam mechanism first rotates arm, then clamps. Integral safety clutch. Unit sealed to keep out dirt and chips.

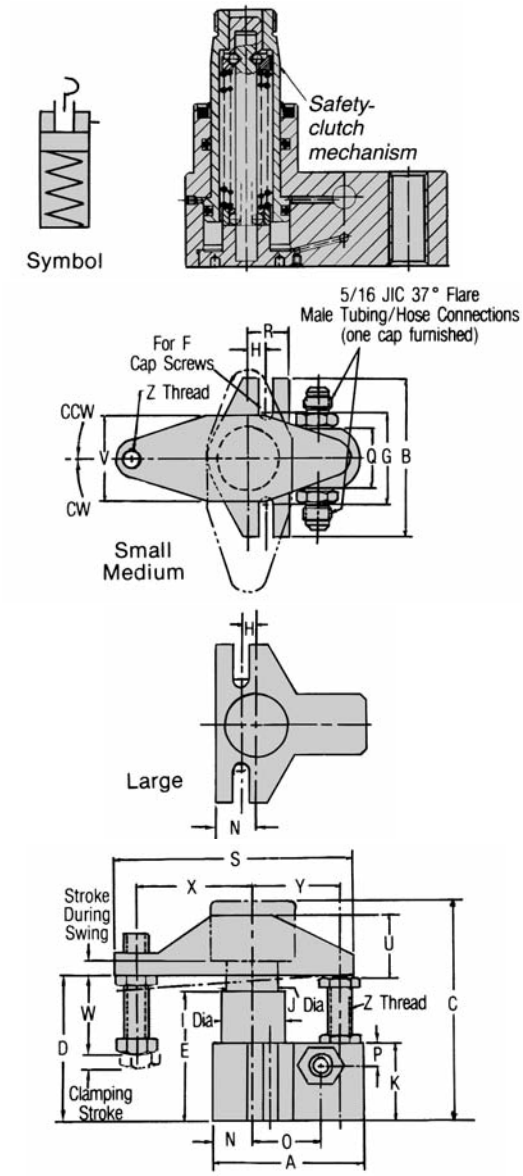

	7500 psi	1200	3000	8200
	6000 psi	1000	2400	6600
	5000 psi	800	2000	5500
	4000 psi	700	1600	4400
	3000 psi	500	1200	3300
Clamping stroke		.276	.315	.433
Stroke during swing		.276	.315	.354
Fluid required (cu.in)		.20	.45	1.40
Max. fluid flow rate (cu.in./min.)		12	27	84
Min. cycle time (sec.)		1	1	1
Force per 1000 psi (lbs)		128	348	992
Force per 1000 psi (lbs) (half arm)		180	440	1120
Max. operating pressure (psi)		7500	7500	7500
Max. operating pressure (psi) (half arm)		3000	3000	3000
A		2.990	4.724	5.984
B		3.150	4.724	5.512
C		4.450	5.450	7.450
D		2.93	3.29	4.29
E		2.559	2.953	3.839
F		5/16-18	5/8-11	3/4-10
G		2.000	3.062	4.062
H		.315	.591	.669
I dia		1.259	1.969	2.756
J dia		.787	1.260	1.969
K		1.575	1.772	2.165
N		.787	1.102	1.654
O		1.181	1.969	2.362
P		.433	.433	.433
Q		1.181	1.339	1.575
R		.787	1.575	2.047
S		4.803	7.284	8.780
U		1.240	1.850	2.421
V		1.732	2.303	3.858
W max./min.		2.5 / .25	3.09 / .44	3.84 / .50
X		2.362	3.268	3.937
Y		1.772	2.953	3.543
Z		3/8-16	5/8-11	3/4-10
Weight (lbs)		4.0	8.6	23.0
Part No., Clockwise, with Arm		**CLR-311-SC**	**CLR-511-SC**	**CLR-711-SC**
Part No., CCW, with Arm		**CLR-321-SC**	**CLR-521-SC**	**CLR-721-SC**
Part No., Clockwise, without Arm		**CLR-1883-711-SC**	**CLR-1885-711-SC**	**CLR-1887-711-SC**
Part No., CCW, without Arm		**CLR-1883-721-SC**	**CLR-1885-721-SC**	**CLR-1887-721-SC**

SWIFTSURE®

CARR LANE ROEMHELD MFG. CO.

Sales—Phone (314) 647-6200 Fax (314) 647-5736
Engineering—Phone 1-800-827-2526 Fax (636) 386-8034

Flange Base Mini

- **Extremely small, economical swing clamp**
- **Flange base configuration provides many plumbing options, including manifold mounting**
- **Single-acting version has a strong, dependable spring return**

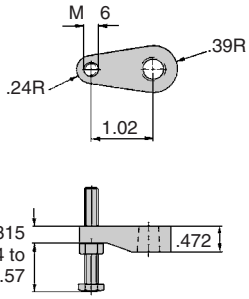

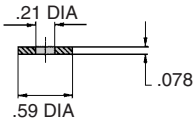

Washer
CLR-3301-279-SCA

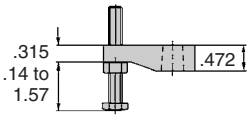

Clamping Arm
CLR-0354-057-SCA

Screw
CLR-3300-209-SCA

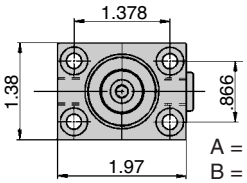

A = Clamping
B = Unclamping

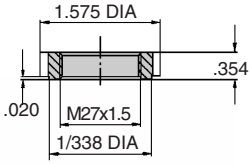

Lock Ring
CLR-3527-076-SCA

CLAMPING ACTION: Fluid pressure swings arm over workpiece (.393" stroke during swing) then clamps down (.236" maximum clamping stroke). Choice of spring return (single acting) or fluid return (double acting).

SWING MOTION: This swing clamp does not have a safety clutch; therefore, the swing motion must not be restricted in any way. Adjust the contact bolt so that the clamp completes its full swing stroke and starts its clamping stroke before contacting the workpiece.

MOUNTING: Screw into a 1-1/16-16 tapped hole, or mount through a 1-1/16 diameter bored hole or fasten with four socket-head cap screws.

FLUID CONNECTION: 1/8" BSPP port. If fixture is powered by a high-flow-rate power source and only contains a few clamps, a Flow-Control Valve (page 98) may be required. See maximum fluid-flow rate in table below.

CLAMPING ARM: Order clamping arm, screw, and washer separately. An adjustable contact bolt is furnished with the clamping arm. Arm can be mounted to start its swing from any position within 360°. When using special, longer clamping arms, operating pressure and flow rate have to be reduced.

DESIGN CONSIDERATIONS: The spring area of single-acting swing clamps has to be vented for proper functioning. The sintered metal air filter prevents penetration of contaminations. If there is a possibility that cutting lubricants and coolants could penetrate through the sintered metal air filter into the cylinder's interior, a vent hose has to be connected and be placed in a protected position.

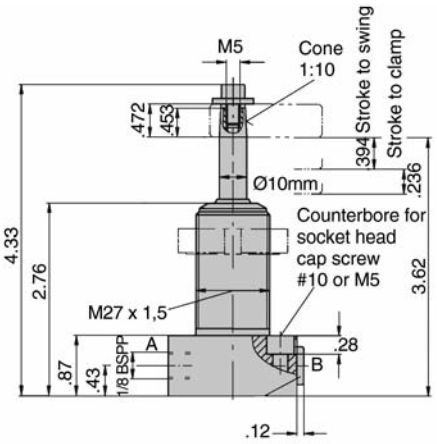

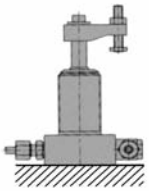

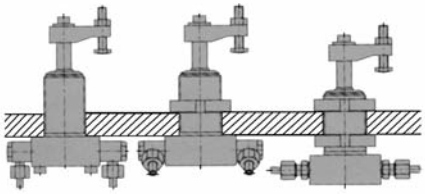

Version 1
Standard Fittings

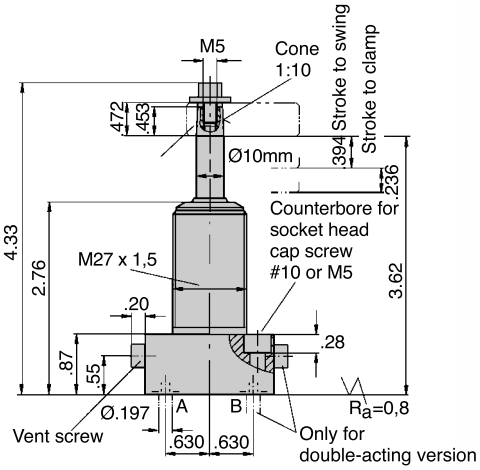

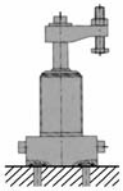

Version 2
Manifold Mounted

Clamping force with single arm, single acting (lbs)	5000 psi	**470**
	4000 psi	370
	3000 psi	270
Clamping force with single arm, double acting (lbs)	5000 psi	490
	4000 psi	390
	3000 psi	290
Clamping stroke		.24
Stroke during swing		.39
Fluid required (cu. in.)		.07
Max. fluid flow rate (cu. in./min.)		9
Max. operating pressure (psi)		5000
Min. operating pressure (psi)		450
Weight (lbs)		.9

Clamp without Arm, Standard Fittings

Single acting, 90° CW swing	**CLR-1849-011-SC**
Single acting, 90° CCW swing	**CLR-1849-021-SC**
Double acting, 90° CW swing	**CLR-1850-111-SCD**
Double acting, 90° CCW swing	**CLR-1850-121-SCD**

Clamp without Arm, Manifold Mounted

Single acting, 90° CW swing	**CLR-1849-012-SC**
Single acting, 90° CCW swing	**CLR-1849-022-SC**
Double acting, 90° CW swing	**CLR-1850-112-SCD**
Double acting, 90° CCW swing	**CLR-1850-122-SCD**

Accessories

Clamping arm with contact bolt	**CLR-0354-057-SCA**
Screw for clamping arm	**CLR-3300-209-SCA**
Washer for clamping arm	**CLR-3301-279-SCA**
Lock ring	**CLR-3527-076-SCA**

Swing Clamps

7500/3000 psi max
Single and double acting

Flange Base

All Threaded

- **Popular series of swing clamps that provides many plumbing options**
- **Unique safety clutch prevents damage if arm strikes an object during swing**
- **Double-acting clamps are also available with longer clamping strokes (25mm or 50mm). Please contact factory.**
- **Choice of four sizes (3, 5, 6, and 7 series)**

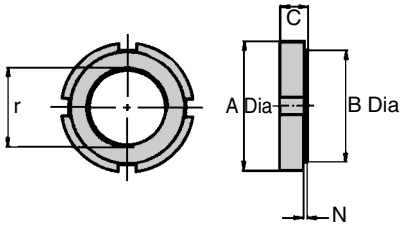

Lock Ring

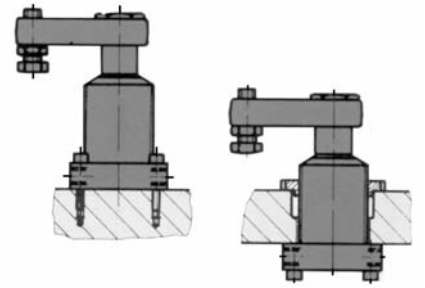

Version 1
Flange Base
Standard Fittings

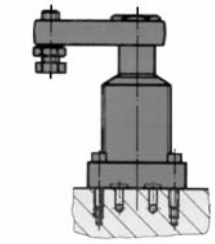

Version 2
Flange Base
Manifold Mounted

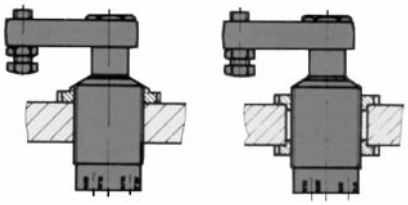

Version 3
All Threaded
Standard Fittings

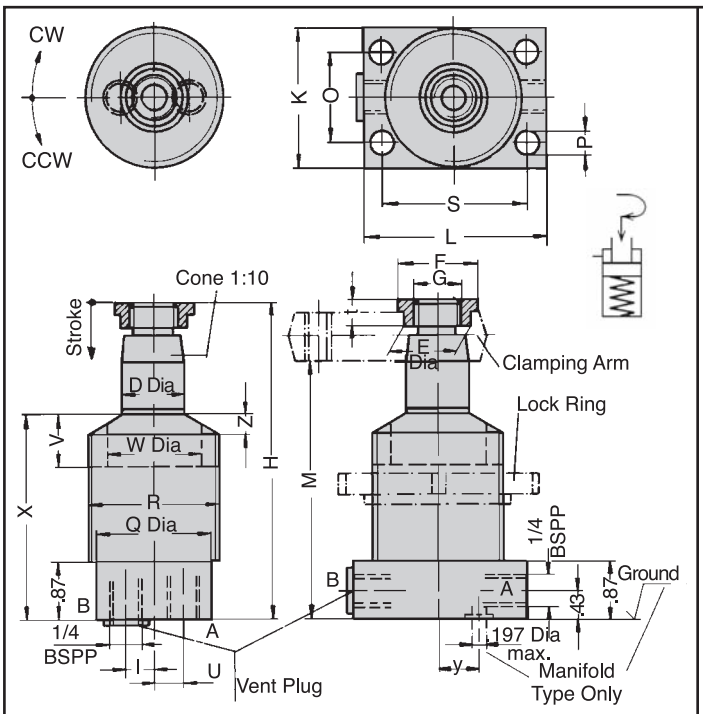

Single Acting

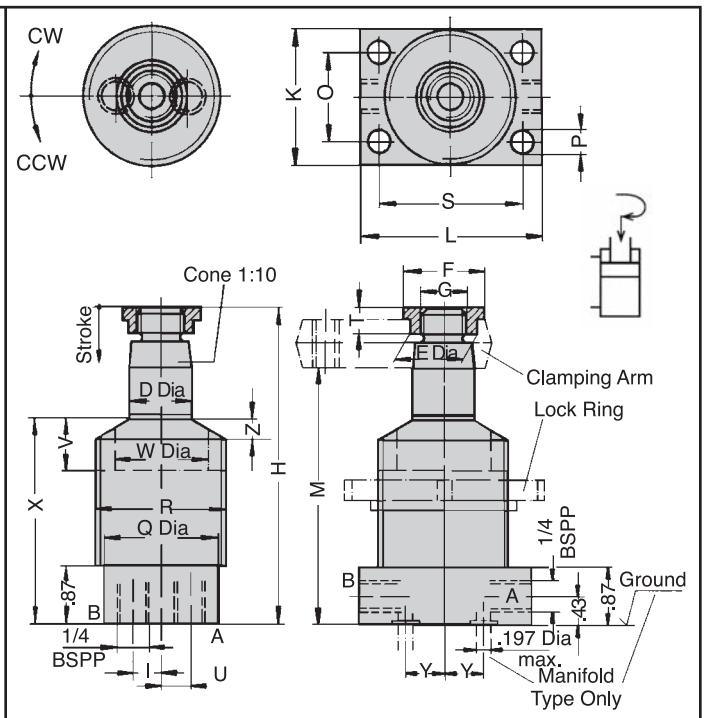

Double Acting

Swing Clamps

7500/3000 psi max
Single and double acting

CLAMPING ACTION: Fluid pressure swings arm 90° over workpiece then clamps down. Spring return lifts arm then swings in back 90° for loading/unloading. Optional fluid return version (double-acting). Choose either clockwise or counterclockwise rotation to clamping position.

MOUNTING: Choose from many possible mounting methods: (1) Fasten to top of fixture plate with four capscrews inserted through flange base from above; (2) Mount through a hole in the fixture plate, fastening with four capscrews inserted through flange base from below; (3) Mount through a bored hole and secure with two lockrings. Mount in any position, horizontal or vertical. Standard clamping arm requires a rear support.

DESIGN CONSIDERATIONS: The clamping arm must go through its full swing to operate properly. Stopping the arm short by obstructing it could possibly cause damage. Use low operating pressure during initial setting. May require a simple flow-control valve if fixture contains only a few clamps and is powered by a high-flow-rate power source. See power source pages to check. Cycle time must be at least one second.

STANDARD CLAMPING ARM: Rugged nodular iron arm pivots on a forged steel carrier. Arm can be mounted to start its 90° swing from any position within 360°. Contact bolt furnished.

OPTIONAL HALF ARM: Forged steel, furnished with contact bolt. Whenever possible, use standard clamping arms, with rear supports, for best mechanical leverage and full clamping force. Half arms are more compact and useful when there is no room for a rear support, but the maximum clamping force is greatly reduced. Half arms cause bending in the piston rods. This bending lowers the allowable maximum fluid pressure to 3000 psi. Exceeding 3000 psi can cause internal damage and decrease service life considerably. Arm extensions will furthur reduce the allowable operating pressure (inversely proportional to arm length.) To order Swing Clamps with half arms instead of standard arms, add an "H" to the part no.

FLUID CONNECTION: Male 37° tubing/hose connection (two with double-acting clamps). Do not use NPT fittings.

CONSTRUCTION: Sturdy helical-cam mechanism first rotates arm, then clamps. Integral safety clutch. Unit sealed to keep out dirt and chips.

3000 psi maximum

Optional Half Arm

To order a Swing Clamp with a half arm instead of a standard pivoting arm, add on "H" to the part no. Example:

CLR-314-SC Standard Arm
CLR-314-SCH Half Arm

Clamping force (lbs) standard pivoting arm SA/DA (lbs)	7500 psi	1200	2900	4700	8100
	6000 psi	860/920	2200/2300	3400/3700	6000/6500
	5000 psi	710/770	1800/2000	2800/3100	4900/5500
	4000 psi	580/620	1480/1560	2340/2480	4030/4340
	3000 psi	400/450	960/1200	1600/1900	2800/3300
Clamping force half arm SA/DA (lbs) See pg. 24.1 for special arm lengths	3000 psi	540/630	1320/1560	1700/2360	3360/3810
Clamping stroke		.43	.55	59	.59
Stroke during swing		.28	.32	.43	.35
Fluid required to clamp (cu. in.)		.20	.61	1.12	1.69
Fluid required to unclamp, DA (cu. in.)		.54	1.69	3.11	4.60
Max. fluid flow rate (cu. in./min.)		11	36	67	101
Min. operating pressure (psi)		450	450	450	450
A Dia		2.68	3.54	4.53	5.12
B Dia		2.047/2.039	2.677/2.669	3.543/3.535	3.937/3.929
C		.47	.51	.63	.63
D Dia		.787	1.260	1.575	1.969
E Dia		.925	1.319	1.772	2.185
F Dia		1.18	1.57	2.17	2.68
G		M18 x 1.5	M28 x 1.5	M35 x 1.5	M45 x 1.5
H		4.98	5.81	6.77	7.17
I		.47	.49	.75	1.00
K		1.77	2.48	3.15	3.54
L		2.56	3.35	3.94	4.53
M (standard arm/half arm)		4.13/4.13	4.69/4.69	5.43/5.43	5.69/5.57
N		.12	.16	.20	.20
O		1.181	1.732	2.362	2.677
P Dia		.256	.335	.531	.630
Q Dia		1.69	2.28	3.03	3.46
R		M45 x 1.5	M60 x 1.5	M80 x 2	M90 x 2
S		1.969	2.559	3.150	3.543
T		.354	.394	.433	.472
U		.47	.77	1.04	1.34
V		.79	.79	1.18	1.57
W Dia		1.26	1.97	2.36	2.76
X		3.33	3.72	4.33	4.57
Y		.591	1.102	1.220	1.476
Z		.20	.24	.24	.35
Part No., Lock Ring		**CLR-300-SCA**	**CLR-500-SCA**	**CLR-600-SCA**	**CLR-700-SCA**
Part No., Standard Pivoting Arm		**CLR-302-SCA**	**CLR-502-SCA**	**CLR-602-SCA**	**CLR-702-SCA**
Part No., Half Arm		**CLR-301-SCA**	**CLR-501-SCA**	**CLR-601-SCA**	**CLR-701-SCA**

Flange Base – Standard Fittings

Part No., Clamp without Arm	Single-Acting, CW	**CLR-1883-104-SC**	**CLR-1885-104-SC**	**CLR-1886-104-SC**	**CLR-1887-104-SC**
	Single-Acting, CCW	**CLR-1883-204-SC**	**CLR-1885-204-SC**	**CLR-1886-204-SC**	**CLR-1887-204-SC**
	Double-Acting, CW	**CLR-1893-104-SCD**	**CLR-1895-104-SCD**	**CLR-1896-104-SCD**	**CLR-1897-104-SCD**
	Double-Acting, CCW	**CLR-1893-204-SCD**	**CLR-1895-204-SCD**	**CLR-1896-204-SCD**	**CLR-1897-204-SCD**
Part No., Clamp with Standard Arm	Single-Acting, CW	**CLR-314-SC**	**CLR-514-SC**	**CLR-614-SC**	**CLR-714-SC**
	Single-Acting, CCW	**CLR-324-SC**	**CLR-524-SC**	**CLR-624-SC**	**CLR-724-SC**
	Double-Acting, CW	**CLR-314-SCD**	**CLR-514-SCD**	**CLR-614-SCD**	**CLR-714-SCD**
	Double-Acting, CCW	**CLR-324-SCD**	**CLR-524-SCD**	**CLR-624-SCD**	**CLR-724-SCD**

Flange Base – Manifold Mounted

Part No., Clamp without Arm	Single-Acting, CW	**CLR-1883-504-SC**	**CLR-1885-504-SC**	**CLR-1886-504-SC**	**CLR-1887-504-SC**
	Single-Acting, CCW	**CLR-1883-604-SC**	**CLR-1885-604-SC**	**CLR-1886-604-SC**	**CLR-1887-604-SC**
	Double-Acting, CW	**CLR-1893-504-SCD**	**CLR-1895-504-SCD**	**CLR-1896-504-SCD**	**CLR-1897-504-SCD**
	Double-Acting, CCW	**CLR-1893-604-SCD**	**CLR-1895-604-SCD**	**CLR-1896-604-SCD**	**CLR-1897-604-SCD**
Part No., Clamp with Standard Arm	Single-Acting, CW	**CLR-354-SC**	**CLR-554-SC**	**CLR-654-SC**	**CLR-754-SC**
	Single-Acting, CCW	**CLR-364-SC**	**CLR-564-SC**	**CLR-664-SC**	**CLR-764-SC**
	Double-Acting, CW	**CLR-354-SCD**	**CLR-554-SCD**	**CLR-654-SCD**	**CLR-754-SCD**
	Double-Acting, CCW	**CLR-364-SCD**	**CLR-564-SCD**	**CLR-664-SCD**	**CLR-764-SCD**

All Threaded – Standard Fittings

Part No., Clamp without Arm	Single-Acting, CW	**CLR-1883-304-SC**	**CLR-1885-304-SC**	**CLR-1886-304-SC**	**CLR-1887-304-SC**
	Single-Acting, CCW	**CLR-1883-404-SC**	**CLR-1885-404-SC**	**CLR-1886-404-SC**	**CLR-1887-404-SC**
	Double-Acting, CW	**CLR-1893-304-SCD**	**CLR-1895-304-SCD**	**CLR-1896-304-SCD**	**CLR-1897-304-SCD**
	Double-Acting, CCW	**CLR-1893-404-SCD**	**CLR-1895-404-SCD**	**CLR-1896-404-SCD**	**CLR-1897-404-SCD**
Part No., Clamp with Standard Arm	Single-Acting, CW	**CLR-334-SC**	**CLR-534-SC**	**CLR-634-SC**	**CLR-734-SC**
	Single-Acting, CCW	**CLR-344-SC**	**CLR-544-SC**	**CLR-644-SC**	**CLR-744-SC**
	Double-Acting, CW	**CLR-334-SCD**	**CLR-534-SCD**	**CLR-634-SCD**	**CLR-734-SCD**
	Double-Acting, CCW	**CLR-344-SCD**	**CLR-544-SCD**	**CLR-644-SCD**	**CLR-744-SCD**

* Single-acting clamp with standard pivoting arm.

CARR LANE ROEMHELD MFG. CO.
Sales—Phone (314) 647-6200 Fax (314) 647-5736
Engineering—Phone 1-800-827-2526 Fax (636) 386-8034

Swing Clamps

7500 psi max
Double acting only

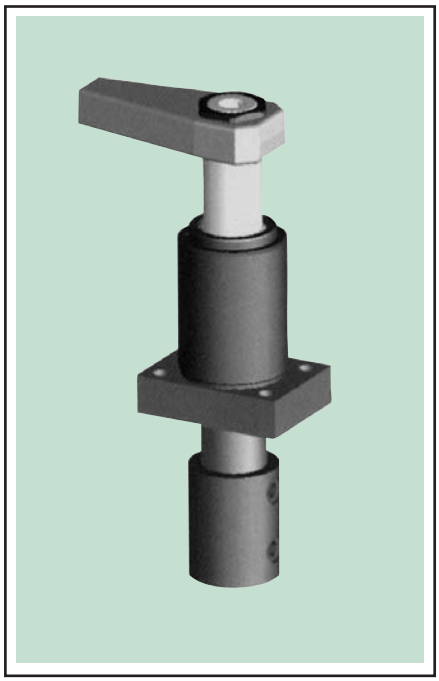

Flange Base
Automation Type

- **Special series of double-acting swing clamps designed for automated high production**
- **Available in the flange-base configuration shown here, and also in threaded-body and top-flange designs**
- **Reinforced swing mechanism (without overload protection device) ensures positive arm position**
- **Extended helix rod for built-in pneumatic or electrical position-monitoring capability**
- **Ideal for transfer lines, assembly lines, test systems, and automated loading systems**
- **Choice of 3 sizes (5, 6, and 7 series), either with standard fittings or manifold mounted**

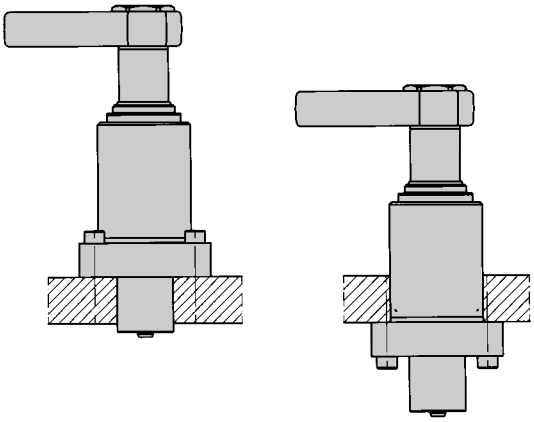

Version 1
Standard Fittings

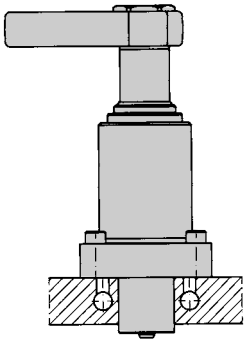

Version 2
Manifold Mounting

APPLICATIONS: Automation-type swing clamps are appropriate when it is essential to know exact swing-arm position for unrestricted workpiece loading and unloading. Due to the sturdy, reinforced swing mechanism and the extended helix rod, they are particularly suited for clamping fixtures with workpiece loading via handling systems; transfer lines; test systems for motors, gears, and axles; automated manufacturing systems; and assembly lines. Automation-type swing clamps are a further development of our proven swing-clamp line to improve process safety in linked clamping systems.

REINFORCED SWING MECHANISM WITHOUT OVERLOAD PROTECTION: The safety-clutch mechanism normally incorporated into our swing clamps is omitted in this design. In case of a slight collision with the clamping arm during loading and unloading, the angular position of the swing-clamp arm will be exactly maintained. Using a heavier clamping arm or swinging too quickly (due to high fluid flow rate) will also not de-clutch the swing arm and affect arm position. The reinforced swing mechanism endures a collision of the clamping arm with the workpiece during clamping up to a pressure of 1500 psi.

POSITION CONTROL: The helix rod protrudes through the clamps bottom cover, allowing pneumatic or electrical control of piston position outside the chip and coolant area. As an accessory, a pneumatic position control is available, and is shown attached to the bottom of the clamp in the photo. A brass control slide is displaced in a stainless housing. The slide opens and closes bore holes, so that a pressure switch or a differential pressure switch can signal the position “clamped” and “unclamped”. It is also possible to install this control directly in the fixture body by means of drilled air passages.

STANDARD WIPER: Swing clamps are furnished with a Viton® wiper as standard. Viton® has a high chemical resistance when using aggressive cutting fluids.

OPTIONAL METALLIC WIPER: This optional, additional wiper protects the Viton® wiper against physical damage, e.g. by hot chips. The swing clamp body is prepared for mounting the metallic wiper, which consists of a radially floating wiping disk and a retaining disk which is pressed onto the existing collar.

DESIGN CONSIDERATIONS: Due to the missing overload protection device, assembly and disassembly of the clamping arm has to be made carefully despite the reinforced swing mechanism. When tightening and untightening the fixing nut, the clamping arm or the hex socket in the piston have to be backed up. It is recommended to tighten and untighten in the swivel area (unclamped). Frequent collisions with the clamping arm in radial direction have to be avoided.

Please see our web catalog for additional information.

Threaded Body Mini

- **Extremely small, economical swing clamp**
- **Threaded-body, cartridge design is extremely compact and ideal for manifold mounting**
- **Single-acting version has a strong, dependable spring return**
- **Easily converts between clockwise, counterclockwise, and zero swing**

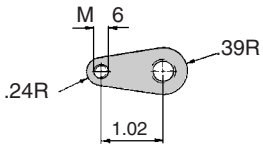

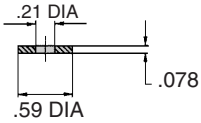

Washer CLR-3301-279

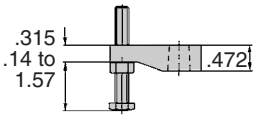

Clamping Arm CLR-0354-057-SCA

Screw CLR-3300-209

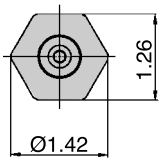

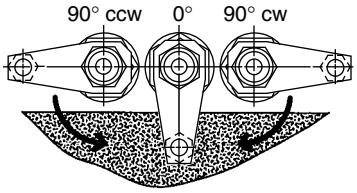

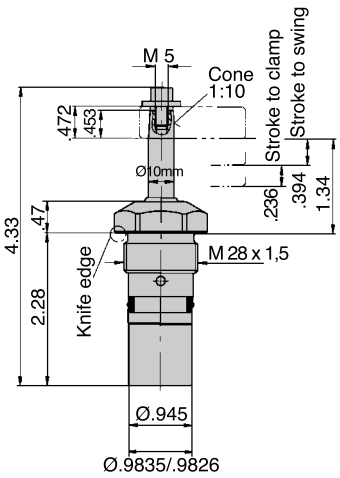

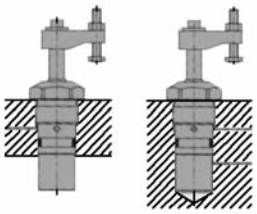

Single acting Double acting

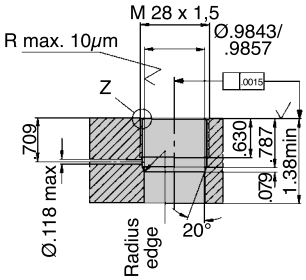

Hole Preparation Single Acting

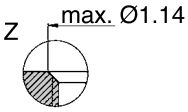

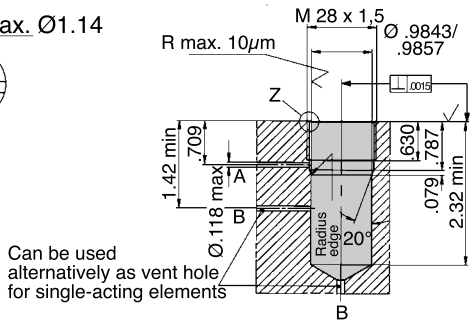

Hole Preparation Double Acting and Single Acting with Vent Hole

CLAMPING ACTION: Fluid pressure swings arm over workpiece (.393" stroke during swing) then clamps down (.236" maximum clamping stroke). Choice of spring return (single acting) or fluid return (double acting).

SWING MOTION: This swing clamp does not have a safety clutch; therefore, the swing motion must not be restricted in any way. Adjust the contact bolt so that the clamp completes its full swing stroke and starts its clamping stroke before contacting the workpiece.

MOUNTING: See drawings below for hole preparation. 73 ft-lbs maximum seating torque.

FLUID CONNECTION: 1/8" BSPP port furnished with a fitting for 5/16" JIC 37° flare male tubing/hose connection. If fixture is powered by a high-flow-rate power source and only contains a few clamps, a Flow-Control Valve (page 98) may be required. See maximum fluid-flow rate in table below.

CLAMPING ARM: Order clamping arm, screw, and washer separately. An adjustable contact bolt is furnished with the clamping arm. Arm can be mounted to start its swing from any position within 360°. When using special, longer clamping arms, operating pressure and flow rate have to be reduced.

DESIGN CONSIDERATIONS: The spring area of single-acting swing clamps has to be vented for proper functioning. The sintered metal air filter prevents penetration or contaminations. If there is a possibility that cutting lubricants and coolants could penetrate through the sintered metal air filter into the cylinder's interior, a vent hose has to be connected and be placed in a protected position.

Clamping force with single arm, single acting (lbs)	5000 psi	**470**
	4000 psi	370
	3000 psi	270
Clamping force with single arm, double acting (lbs)	5000 psi	490
	4000 psi	390
	3000 psi	290
Clamping stroke		.24
Stroke during swing		.39
Fluid required (cu. in.)		.07
Max. fluid flow rate (cu. in./min.)		9
Max. operating pressure (psi)		5000
Min. operating pressure (psi)		450
Weight (lbs)		.74

Clamp without Arm

Single acting, 90° CW swing	**CLR-1849-015-SC**
Single acting, 90° CCW swing	**CLR-1849-025-SC**
Double acting, 90° CW swing	**CLR-1850-115-SCD**
Double acting, 90° CCW swing	**CLR-1850-125-SCD**

Accesssories

Clamping arm with contact bolt	**CLR-0354-057-SCA**
Screw for clamping arm	**CLR-3300-209**
Washer for clamping arm	**CLR-3301-279**

Single Acting

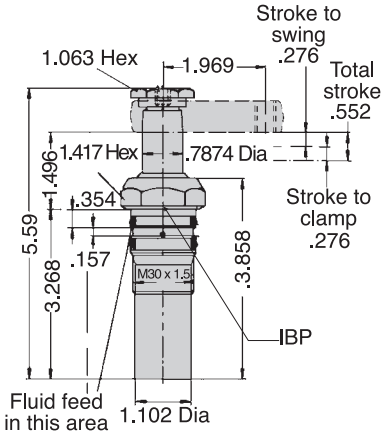

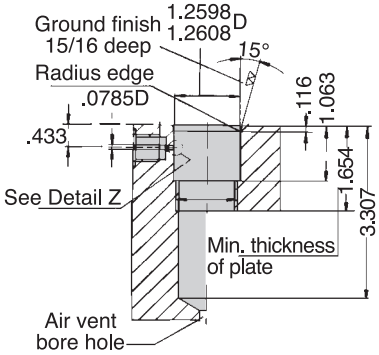

Hole Preparation Individual Mounting

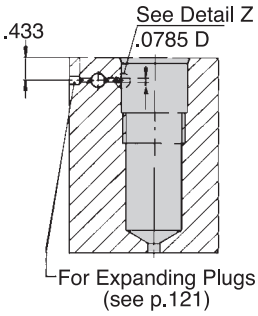

Hole Preparation Row Mounting

Double Acting

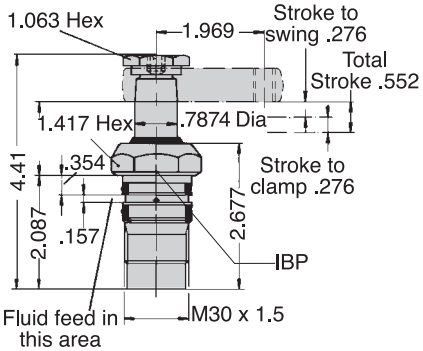

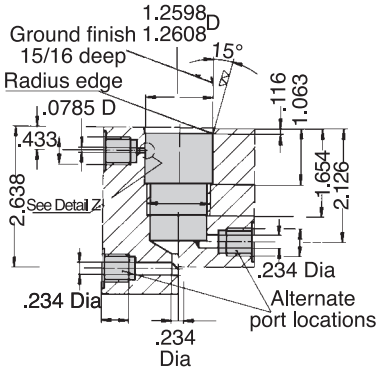

Hole Preparation Individual Mounting

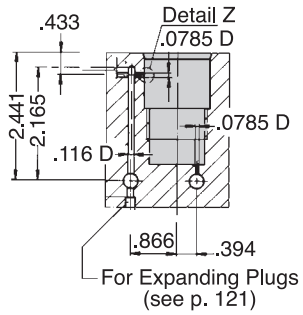

Hole Preparation Row Mounting

Mounting Block (Double Acting Only) CLR-3467-143-SCA

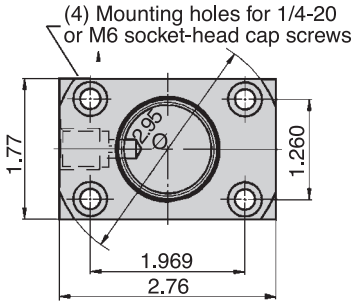

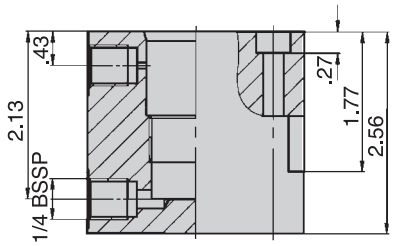

Hole Preparation Detail Z (Single & Double Acting)

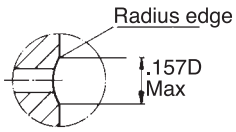

Detail Z

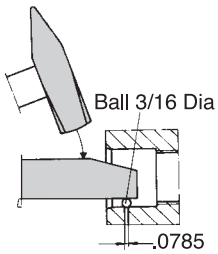

Swing Clamps

7500 psi max
Single and double acting

Threaded Body Compact Single Acting

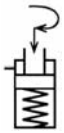

Symbol

Threaded Body Compact Double Acting

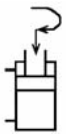

Symbol

- **Cartridge style for extreme compactness**
- **Compact size makes this swing clamp extremely useful in many applications**
- **Compact arm swings 90° for clear loading**
- **Unique safety clutch prevents damage if arm strikes an object during swing**

CLAMPING ACTION: Fluid pressure swings arm 90° over workpiece (.276 swing stroke) then clamps down (.276 maximum clamping stroke). Spring return lifts arm, then swings back 90° for unloading. Optional fluid-return (double-acting) version. Choose either clockwise or counter-clockwise rotation to clamping position.

SAFETY CLUTCH: Even this tiny swing clamp contains our proprietary safety-clutch mechanism. If the clamping arm strikes an unexpected object, during its swing, the clutch disengages to avoid damaging the object or the clamp's helical-cam mechanism.

MOUNTING: Screw clamp into fixture up to the body hex. Carefully follow hole-preparation instructions in the drawings. Round the sharp edge on the upper fluid passage with a 3/16 dia. ball as shown in the Detail Z below (otherwise the lower O ring can be damaged when the clamp is screwed in). Check for burrs with finger before installing.

FLUID CONNECTION: Fluid passages must fee clamp exactly as shown in the drawings below. For proper operation of the safety-clutch mechanism, clamp may require a simple flow-control valve if fixture is powered by a high-flow-rate power source and contains only a few clamps.

CLAMPING ARM: Forged steel clamping arm can be mounted to start its 90° swing from any position within 360°. Adjustable contact bolt furnished.

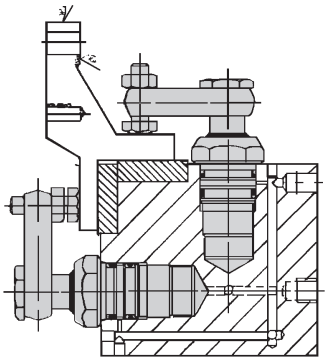

Manifold mounting allows placing these swing clamps very close together, including mounting at 90° to each other.

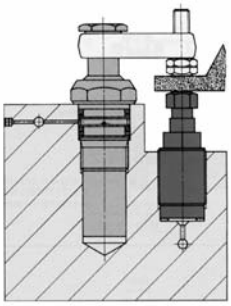

When clamping over a work support, these swing clamps are ideally matched with small threaded-body work supports. (1700 lbs load capacity at 6000 psi). The design rule in such applications is that work-support load capacity should be at least 2X clamping force.

Clamping force (lbs) standard pivoting arm SA/DA (lbs)	7500 psi	**880**
	6000 psi	700
	5000 psi	590
	4000 psi	470
	3000 psi	350
Clamping stroke		.276
Stroke during swing		.276
Fluid required (cu. in.)		.37
Max. fluid flow rate (cu. in./min.)		5.5
Force per 1000 psi (lbs)		117
Max. operating pressure (psi)		7500
Min. operating pressure, SA/DA (psi)		750/450
Weight (lbs)		1.2
Part No., single acting, with arm	cw	**CLR-111-SCH**
	ccw	**CLR-121-SCH**
Part No., single acting, without arm	cw	**CLR-1881-102-SC**
	ccw	**CLR-1881-202-SC**
Part No., double acting, with arm	cw	**CLR-111-SCDH**
	ccw	**CLR-121-SCDH**
Part No., double acting, without arm	cw	**CLR-1891-101-SCD**
	ccw	**CLR-1891-201-SCD**
Spare O Ring (2 req'd)		**CLR-3000-547-SW**
Spare Backup Ring (3 Req'd)		**CLR-3000-548-SW**

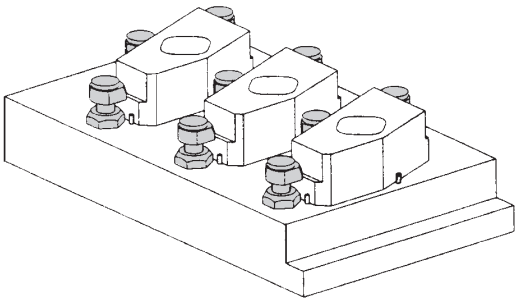

This fixture has three workpieces held by nine swing clamps with short clamping arms. Short arms extend only 5/32" onto the workpiece, but are ideal for some small parts.

CARR LANE ROEMHELD MFG. CO.
Sales—Phone (314) 647-6200 Fax (314) 647-5736
Engineering—Phone 1-800-827-2526 Fax (636) 386-8034

Swing Clamps

7500/3000 psi max
Double acting only

Threaded Cartridge

- **Cartridge style for extreme compactness**
- **Arm swings 90° for clear loading**
- **Unique safety clutch prevents damage if arm strikes an object during swing**
- **Choice of three sizes**

CLAMPING ACTION: Fluid pressure swings arm 90° over workpiece, then clamps down. Return fluid pressure lifts arm, then swings it back 90° for unloading. Choose either clockwise or counterclockwise rotation to clamping position.

DESIGN CONSIDERATIONS: The clamping arm must go through its full extending movement to operate properly. Stopping the arm short by obstructing it could possibly cause damage. Use low operating pressure during initial setting.Be careful not to exceed maximum fluid-flow rate in the chart below (see page 98 for Flow-Control Valves).

SAFETY CLUTCH: Even these compact swing clamps contain our proprietary safety-clutch mechanism. If the arm strikes an unexpected object during its swing, the clutch disengages to avoid damaging the object or the clamp's helical-cam mechanism.

MOUNTING: Screw clamp into fixture up to the body hex. Carefully follow hole-preparation instructions in the drawings below.

STANDARD CLAMPING ARM: Rugged nodular iron arm pivots on a forged steel carrier. Arm can be mounted to start its 90° swing from any position within 360°. Contact bolt furnished.

OPTIONAL HALF ARM: Forged steel, furnished with contact bolt. Whenever possible, use standard clamping arms, with rear supports, for best mechanical leverage and full clamping force. Half arms are more compact and useful when there is no room for a rear support, but the maximum clamping force is greatly reduced. Half arms cause bending in the piston rods. This bending lowers the allowable maximum fluid pressure to 3000 psi. Exceeding 3000 psi can cause internal damage and decrease service life considerably.

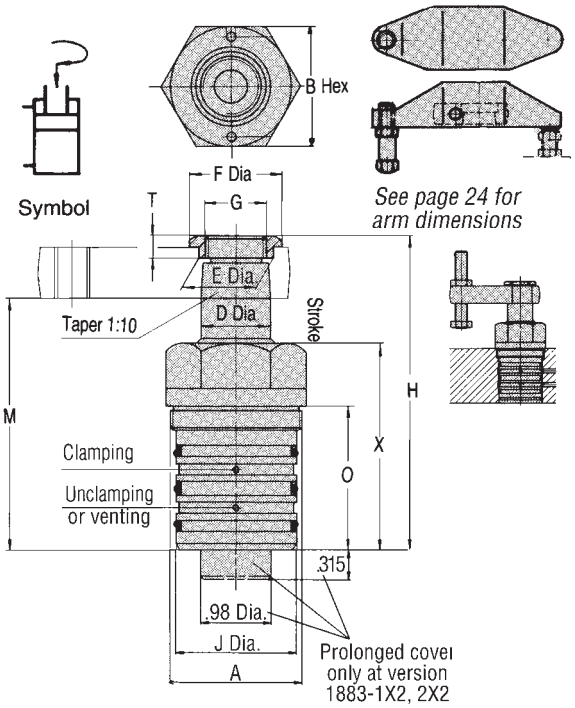

Clamping Force Standard pivoting arm (lbs)	7500 psi	1110	2900	7880
	6000 psi	890	2400	6300
	5000 psi	740	2000	5250
	4000 psi	590	1600	4200
	3000 psi	440	1200	3150
Half Arm (lbs)	3000 psi	540	1320	3360
See Pg. 24.1 for special half arms	2000 psi	360	880	2240
Clamping stroke		0.43	0.55	0.59
Stroke during swing		.276	.315	.354
Fluid required (cu.in)		.54	1.69	4.60
Max. fluid flow rate (cu.in./min.)		12	37	101
Max. operating pressure (psi) (std. arm)		7500	7500	7500
Max. operating pressure (psi) (half arm)		3000	3000	3000
Min. operating pressure (psi)		450	450	450
A		M45x1.5	M60x1.5	M90x2
B		1.81	2.17	3.74
D Dia		.7874	1.2598	1.9685
E Dia		.925	1.319	2.185
F Dia		1.18	1.57	2.68
G		M18x1.5	M28x1.5	M45x1.5
H		4.41	5.98	7.17
J Dia		1.6535	2.1654	3.3465
K Dia		1.6535/1.6545	2.1654/2.1665	3.3465/3.3478
M		3.58	4.88	5.59
N		.945	1.142	1.614
O		2.087	2.598	3.780
Q Dia Max		.197	.197	.236
S		1.614	1.831	2.520
T		.354	.394	.472
U Dia		1.732	2.244	3.425
V		1.457	1.634	2.323
W		.787	.945	1.417
X		2.756	3.898	4.567
Y		.413	.492	.807
Z		.315	.394	.394
Weight (Lbs)		3	6	18
Part No., Single Acting CW Swing		**CLR-1883-102-SC**	**CLR-1885-102-SC**	**CLR-1887-102-SC**
Part No., Single Acting CCW Swing		**CLR-1883-202-SC**	**CLR-1885-202-SC**	**CLR-1887-202-SC**
Part No., Double Acting CW Swing		**CLR-1893-101-SCD**	**CLR-1895-101-SCD**	**CLR-1897-101-SCD**
Part No., Double Acting CCW Swing		**CLR-1893-201-SCD**	**CLR-1895-201-SCD**	**CLR-1897-201-SCD**
Part No., Standard Arm		**CLR-302-SCA**	**CLR-502-SCA**	**CLR-702-SCA**
Part No., Half Arm		**CLR-301-SCA**	**CLR-501-SCA**	**CLR-701-SCA**

Standard Arm

Half Arm
(3000 psi maximum)

Without Arm

Swing Clamps

7500 psi max
Double acting only

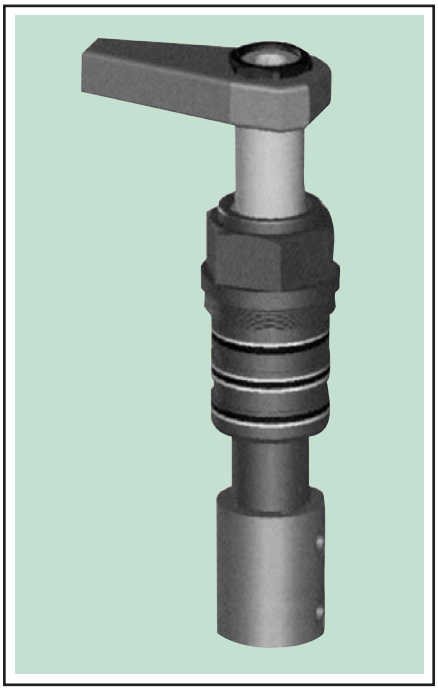

Threaded Body
Automation Type

- **Special series of double-acting swing clamps designed for automated high production**
- **Available in the threaded-body configuration shown here, and also in flange-base and top-flange designs**
- **Reinforced swing mechanism (without overload protection device) ensures positive arm position**
- **Extended helix rod for built-in pneumatic or electrical position-monitoring capability**
- **Ideal for transfer lines, assembly lines, test systems, and automated loading systems**
- **Choice of 2 sizes (5 and 7 series)**

APPLICATIONS: Automation-type swing clamps are appropriate when it is essential to know exact swing-arm position for unrestricted workpiece loading and unloading. Due to the sturdy, reinforced swing mechanism and the extended helix rod, they are particularly suited for clamping fixtures with workpiece loading via handling systems; transfer lines; test systems for motors, gears, and axles; automated manufacturing systems; and assembly lines. Automation-type swing clamps are a further development of our proven swing-clamp line to improve process safety in linked clamping systems.

REINFORCED SWING MECHANISM WITHOUT OVERLOAD PROTECTION: The safety-clutch mechanism normally incorporated into our swing clamps is omitted in this design. In case of a slight collision with the clamping arm during loading and unloading, the angular position of the swing-clamp arm will be exactly maintained. Using a heavier clamping arm or swinging too quickly (due to high fluid flow rate) will also not de-clutch the swing arm and affect arm position. The reinforced swing mechanism endures a collision of the clamping arm with the workpiece during clamping up to a pressure of 1500 psi.

POSITION CONTROL: The helix rod protrudes through the clamps bottom cover, allowing pneumatic or electrical control of piston position outside the chip and coolant area. As an accessory, a pneumatic position control is available, and is shown attached to the bottom of the clamp in the photo. A brass control slide is displaced in a stainless housing. The slide opens and closes bore holes, so that a pressure switch or a differential pressure switch can signal the position “clamped” and “unclamped”. It is also possible to install this control directly in the fixture body by means of drilled air passages.

STANDARD WIPER: Swing clamps are furnished with a Viton® wiper as standard. Viton® has a high chemical resistance when using aggressive cutting fluids.

OPTIONAL METALLIC WIPER: This optional, additional wiper protects the Viton® wiper against physical damage, e.g. by hot chips. The swing clamp body is prepared for mounting the metallic wiper, which consists of a radially floating wiping disk and a retaining disk which is pressed onto the existing collar.

DESIGN CONSIDERATIONS: Due to the missing overload protection device, assembly and disassembly of the clamping arm has to be made carefully despite the reinforced swing mechanism. When tightening and untightening the fixing nut, the clamping arm or the hex socket in the piston have to be backed up. It is recommended to tighten and untighten in the swivel area (unclamped). Frequent collisions with the clamping arm in radial direction have to be avoided.

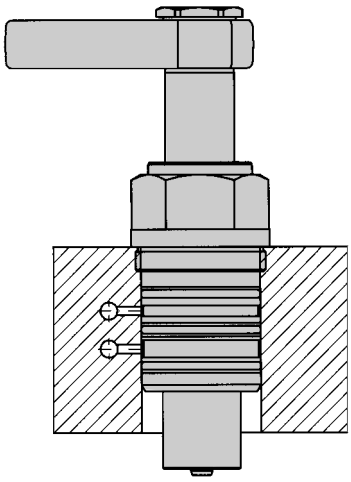

Manifold Mounting

Please see our web catalog for additional information.

Swing Clamps

5000 psi max
Single and double acting

Top Flange Mini

- **Extremely small, economical swing clamp**
- **Top-flange configuration allows low mounting, using either standard fittings or manifold mounting**
- **Single-acting version has a strong, dependable spring return**
- **Easily converts between clockwise, counterclockwise, and zero swing**

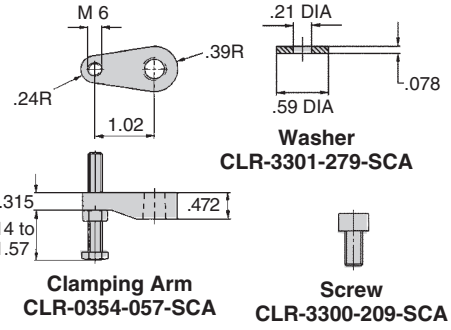

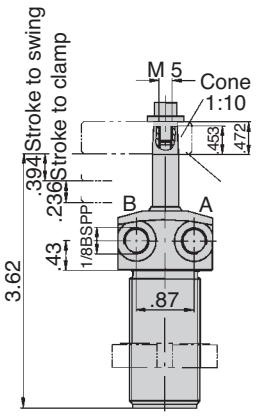

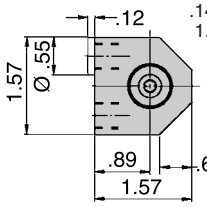

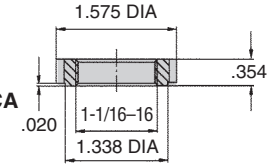

Lock Ring
CLR-3527-776-SCA

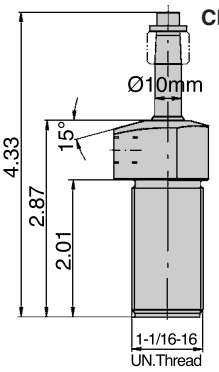

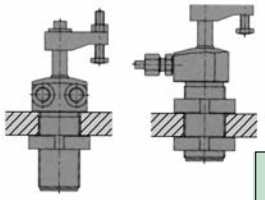

Version 1
Standard Fittings

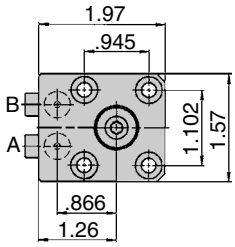

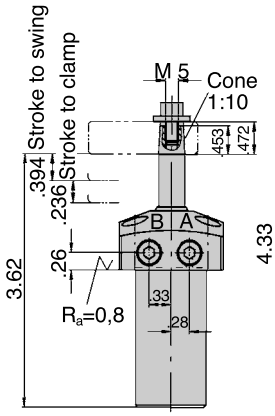

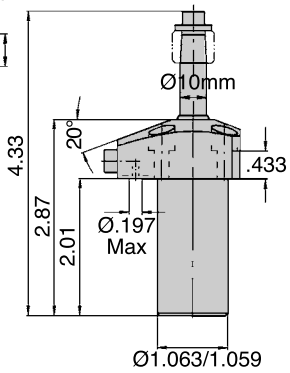

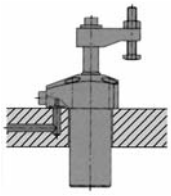

Version 2
Manifold Mounted

CLAMPING ACTION: Fluid pressure swings arm over workpiece (.393" stroke during swing) then clamps down (.236" maximum clamping stroke). Choice of spring return (single acting) or fluid return (double acting).

SWING MOTION: This swing clamp does not have a safety clutch; therefore, the swing motion must not be restricted in any way. Adjust the contact bolt so that the clamp completes its full swing stroke and starts its clamping stroke before contacting the workpiece.

MOUNTING (VERSION 1): Screw into a 1-1/16–16 tapped hole, or mount through a 1-1/16 diameter bored hole. Body thread must be prestressed by using the optional Lock Ring, or by tightening against the bottom of the top flange (use a spacer for exact fitting orientation).

MOUNTING (VERSION 2): Fasten clamp with four #10 or M5 socket-head cap screws.

FLUID CONNECTION: 1/8" BSPP port furnished with a fitting for 5/16" JIC 37° flare male tubing/hose connection. If fixture is powered by a high-flow-rate power source and only contains a few clamps, a Flow-Control Valve (page 98) may be required. See maximum fluid-flow rate in table below.

CLAMPING ARM: Order clamping arm, screw, and washer separately. An adjustable contact bolt is furnished with the clamping arm. Arm can be mounted to start its swing from any position within 360°. When using special, longer clamping arms, operating pressure and flow rate have to be reduced.

DESIGN CONSIDERATIONS: The spring area of single-acting swing clamps has to be vented for proper functioning. The sintered metal air filter prevents penetration of contaminations. If there is a possibility that cutting lubricants and coolants could penetrate through the sintered metal air filter into the cylinder's interior, a vent hose has to be connected and be placed in a protected position.

Clamping force with single arm, single acting (lbs)	5000 psi	**470**
	4000 psi	370
	3000 psi	270
Clamping force with single arm, double acting (lbs)	5000 psi	490
	4000 psi	390
	3000 psi	300
Clamping stroke		.24
Stroke during swing		.39
Fluid required (cu. in.)		.07
Max. fluid flow rate (cu. in./min.)		9
Max. operating pressure (psi)		5000
Min. operating pressure (psi)		450
Weight (lbs)		.9

Clamp without Arm, Standard Fittings

Single acting, 90° CW swing	**CLR-1849-713-SC**
Single acting, 90° CCW swing	**CLR-1849-723-SC**
Double acting, 90° CW swing	**CLR-1850-713-SCD**
Double acting, 90° CCW swing	**CLR-1850-723-SCD**

Clamp without Arm, Manifold Mounted

Single acting, 90° CW swing	**CLR-1849-014-SC**
Single acting, 90° CCW swing	**CLR-1849-024-SC**
Double acting, 90° CW swing	**CLR-1850-114-SCD**
Double acting, 90° CCW swing	**CLR-1850-124-SCD**

Accessories

Clamping arm with contact bolt	**CLR-0354-057-SCA**
Screw for clamping arm	**CLR-3300-209-SCA**
Washer for clamping arm	**CLR-3301-279-SCA**
Lock ring	**CLR-3527-776-SCA**

Swing Clamps

7500 psi max
Single and double acting

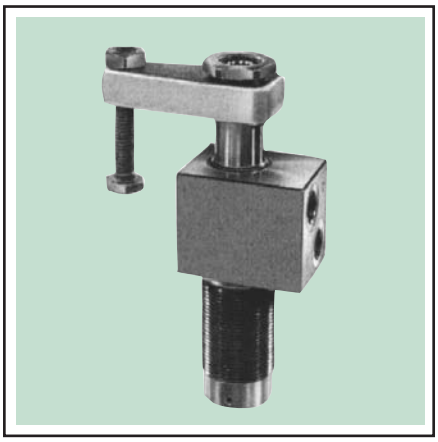

Top Flange

- **Compact arm swings 90° for clear loading**
- **Unique safety clutch prevents damage if arm strikes an object during swing**
- **Fast, totally dependable spring return**
- **High-level ports for exposed plumbing above fixture plate**

CLAMPING ACTION: Fluid pressure swings arm 90° over workpiece (9/32 swing stroke) then clamps down (9/32 maximum clamping stroke). Spring return lifts arm then swings it back 90° for loading/unloading. Optional fluid return (double acting). Choose part no. for either clockwise or counterclockwise rotation into clamping position.

SAFETY CLUTCH: Even this tiny swing clamp contains our proprietary safety-clutch mechanism. If the clamping arm strikes an unexpected object during its swing, the clutch disengages to avoid damaging the object or the clamp's helical-cam mechanism.

MOUNTING: Screw into a 1-1/4-16 tapped hole, or mount through a 1-1/4 dia. bored hole. Body thread must be prestressed by using the lockring, or by tightening against the upper housing (use a spacer for exact fitting orientation).

FLUID CONNECTION: Male 37° tubing/hose connection. For proper operation of the safety clutch mechanism, clamp may require a simple flow-control valve (page 98) if fixture is powered by a high-flow-rate power source and contains only a few clamps. See power source pages to check. Do not use NPT fittings.

CLAMPING ARM: Forged steel clamping arm can be mounted to start its 90° swing from any position within 360°. Adjustable contact bolt furnished. For other arm options use size 3xx, p. 25.

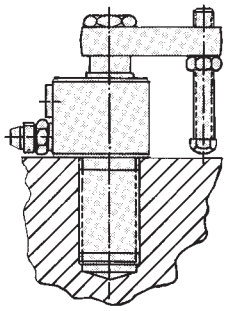

Low mounting in a tapped hole

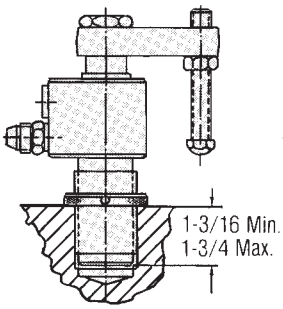

High mounting in a tapped hole

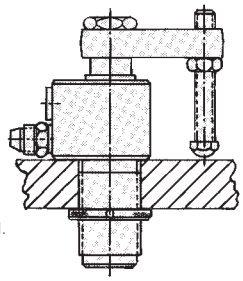

Through hole mounting

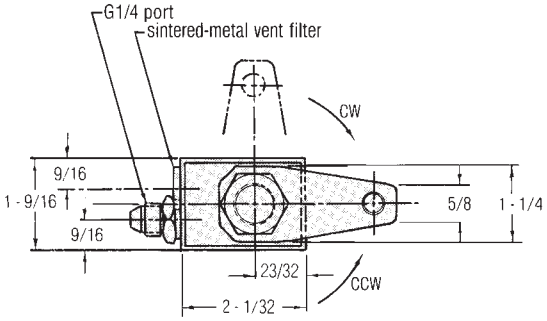

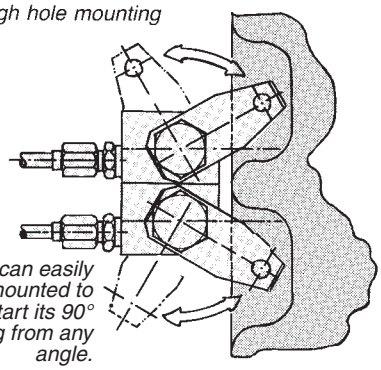

Arm can easily be remounted to start its 90° swing from any angle.

Safety-clutch mechanism

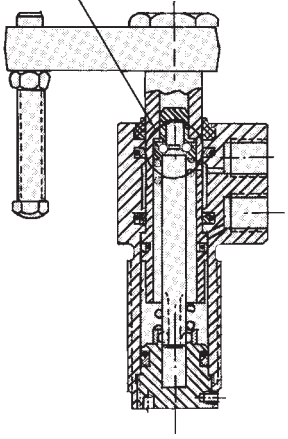

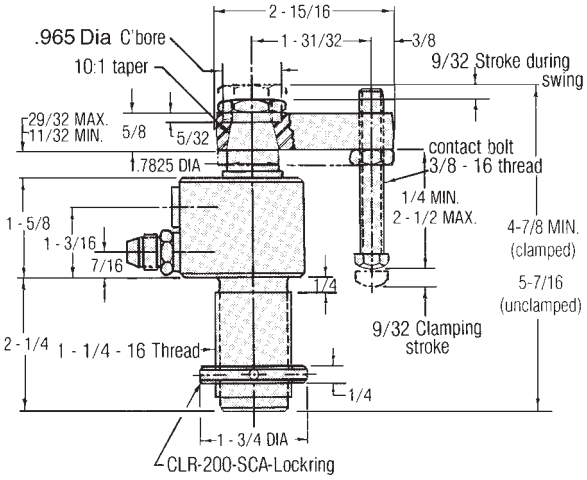

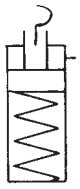

Symbol

Clamping force (lbs) For special half arm lengths use size three on Pg. 24.1	7500 psi	**880 Lbs**
	6000 psi	700
	5000 psi	590
	4000 psi	470
	3000 psi	350
Clamping stroke		0.276
Stroke during swing		0.276
Fluid required (cu.in.)		.20
Maximum fluid flow rate (cu.in./min.)		6.0
Weight (lbs)		2.0
Part No., Single Acting, CW, with Arm		**CLR-1882-730-SC**
Part No., CCW, with Arm		**CLR-1882-740-SC**
Part No., CW, without Arm		**CLR-1882-730**
Part No., CCW, without Arm		**CLR-1882-740**
Part No., Double Acting,CW, with Arm		**CLR-1892-730-SCD**
Part No., CCW, with Arm		**CLR-1892-740-SCD**
Part No., CW, without Arm		**CLR-1892-730**
Part No., CCW, without Arm		**CLR-1892-740**

SWIFTSURE®

CARR LANE ROEMHELD MFG. CO.

Sales—Phone (314) 647-6200 Fax (314) 647-5736
Engineering—Phone 1-800-827-2526 Fax (636) 386-8034

Swing Clamps

7500 psi max
Single and double acting

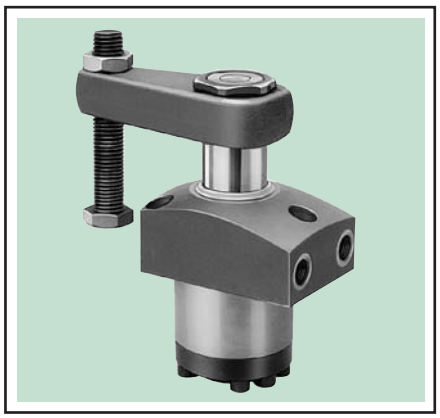

Top Flange

CLAMPING ACTION: Fluid pressure swings arm 90° over workpiece then clamps down. Spring return lifts arm then swings it back 90° for loading/unloading. Optional fluid return version (double-acting). Choose either clockwise or counterclockwise rotation to clamping position.

DESIGN CONSIDERATIONS: The clamping arm must go through its full swing to operate properly. Stopping the arm short by obstructing it could possibly cause damage. Use low operating pressure during initial setting. May require a simple flow-control valve if fixture contains only a few clamps and is powered by a high-flow-rate power source. See power source pages to check. Swing cycle time must be at least one second.

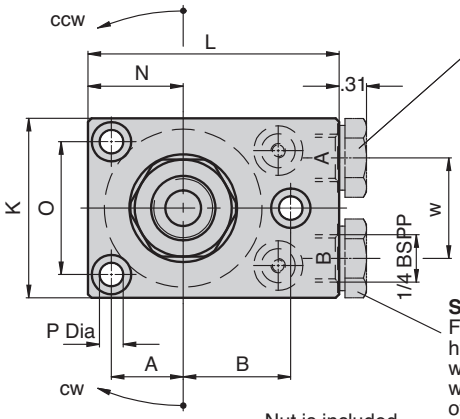

Double-acting elements:
For manifold mounting remove socket head cap screws and USIT-rings. Screw in two plugs CLR-810-F. (Not included).

Single-acting elements:
For manifold mounting at port A, remove socket head cap screw and USIT-ring, close port 1/4 BSPP with plug CLR-810-F. Port B is normally closed with a plug with sintered metal air filter. Bleeding of the spring area by drilled channels at port B is possible, plug CLR-810-F is required for this purpose.

Accessory:
Clamping arm assembly complete for max. 3000 psi

Nut is included in our delivery. Order of spare parts, see chart.

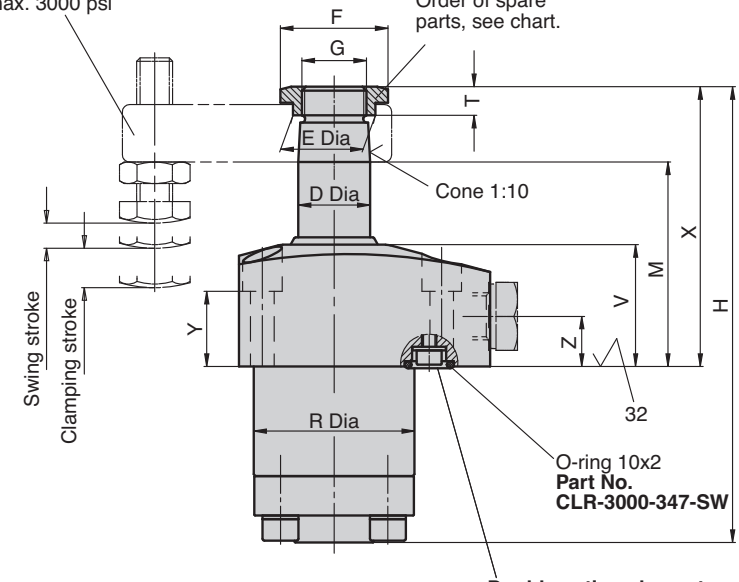

O-ring 10x2
Part No.
CLR-3000-347-SW

Double-acting elements:
For manifold mounting remove socket head cap screws and USIT-rings. Screw in two plugs CLR-810-F. (Not included).

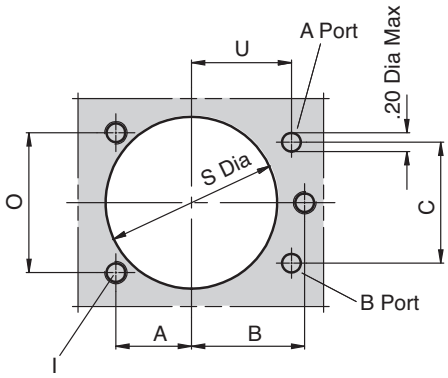

A Port = Clamping
B Port = Venting (single acting)
B Port = Unclamping (double acting)

SWIFTSURE®

CARR LANE ROEMHELD MFG. CO.

Sales—Phone (314) 647-6200 Fax (314) 647-5736
Engineering—Phone 1-800-827-2526 Fax (636) 386-8034

Swing Clamps

7500 psi max
Single and double acting

Connecting possibilities

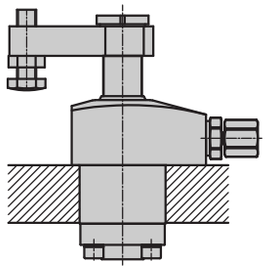

Tube connection

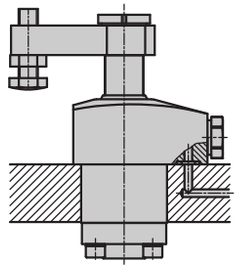

Top Flange with O-ring sealing for manifold mounting

FLUID CONNECTION: 1/4 BSPP Port fittings with optional manifold mounting.

CONSTRUCTION: Sturdy helical-cam mechanism first rotates arm, then clamps. Integral safety clutch. Unit sealed to keep out dirt and chips.

See page 24 for arm options. Also available in 60° and 45° swing.

Clamping force (lbs) standard pivoting arm SA/DA (lbs)	7500 psi	**1200**	**2900**	**4700**	**8100**
	6000 psi	860/920	2200/2300	3400/3700	6000/6500
	5000 psi	710/770	1800/2000	2800/3100	4900/5500
	4000 psi	580/620	1480/1560	2340/2480	4030/4340
	3000 psi	400/450	960/1200	1600/1900	2800/3300
Clamping force half arm SA/DA (lbs) See pg. 24.1 for special arm lengths	3000 psi	540/630	1320/1560	1700/2360	3360/3810
Clamping stroke		.43	.55	.59	.59
Swing stroke		.28	.31	.43	.35
Total stroke		.71	.86	1.02	.94
Operating pressure to swing min. (psi)		450	450	450	450
Max. oil flow rate (cu.in)		11	36	67	101
Oil to clamp (cu.in.)		.20	.61	1.12	1.69
Oil to return (cu.in.)		.54	1.69	3.11	4.58
D Dia		.787	1.260	1.575	1.969
A		.787	1.063	1.457	1.654
B		1.181	1.496	1.969	2.165
C		1.260	1.811	2.441	2.953
E Dia		.93	1.32	1.77	2.19
F		1.18	1.57	2.17	2.68
G		M18 x 1.5	M28 x 1.5	M35 x 1.5	M45 x 1.5
H		4.98	5.81	6.77	7.17
I		M6	M8	M10	M12
K		1.97	2.48	3.35	3.74
L		2.76	3.35	4.33	4.92
M		2.22	2.60	2.76	2.72
N		1.04	1.36	1.85	2.17
O		1.457	1.890	2.559	2.835
P Dia		.26	.35	.43	.55
R Dia		1.76	2.35	3.14	3.54
S Dia		1.79	2.38	3.17	3.56
T		.35	.39	.43	.47
U		1.043	1.220	1.575	1.772
V		1.34	1.57	1.57	1.57
W		1.10	1.61	2.17	2.76
X		3.07	3.70	4.09	4.29
Y		.83	.87	.59	.55
Z		.55	.55	.47	.47

Single Acting

Part No., Clockwise rotation	**CLR-1883-103-SC**	**CLR-1885-103-SC**	**CLR-1886-103-SC**	**CLR-1887-103-SC**
Part No., Counterclockwise rotation	**CLR-1883-203-SC**	**CLR-1885-203-SC**	**CLR-1886-203-SC**	**CLR-1887-203-SC**
Part No., 0 degree	**CLR-1883-243-SC**	**CLR-1885-243-SC**	**CLR-1886-243-SC**	**CLR-1887-243-SC**

Double Acting **

Part No., Clockwise rotation	**CLR-1893-103-SCD**	**CLR-1895-103-SCD**	**CLR-1896-103-SCD**	**CLR-1897-103-SCD**
Part No., Counterclockwise rotation	**CLR-1893-203-SCD**	**CLR-1895-203-SCD**	**CLR-1896-203-SCD**	**CLR-1897-203-SCD**
Part No., 0 degree	**CLR-1893-243-SCD**	**CLR-1895-243-SCD**	**CLR-1896-243-SCD**	**CLR-1897-243-SCD**

*** Longer stroke versions available - Consult Engineering.*

CARR LANE ROEMHELD MFG. CO.
Sales—Phone (314) 647-6200 Fax (314) 647-5736
Engineering—Phone 1-800-827-2526 Fax (636) 386-8034

Swing Clamps

7500 psi max
Double acting only

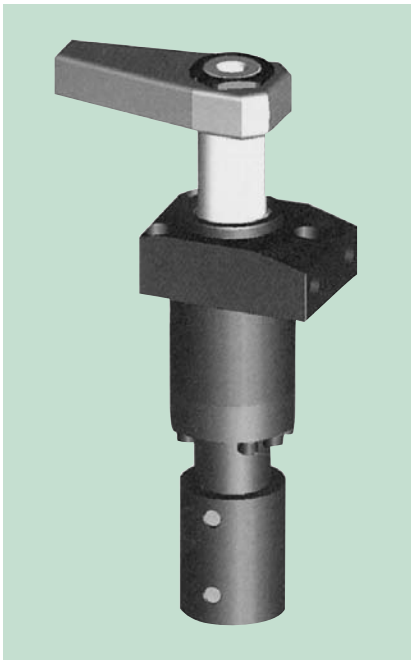

Top Flange
Automation Type

- **Special series of double-acting swing clamps designed for automated high production**
- **Available in the top-flange configuration shown here, and also in flange-base and threaded-body designs**
- **Reinforced swing mechanism (without overload protection device) ensures positive arm position**
- **Extended helix rod for built-in pneumatic or electrical position-monitoring capability**
- **Ideal for transfer lines, assembly lines, test systems, and automated loading systems**
- **Choice of 3 sizes (5, 6, and 7 series)**

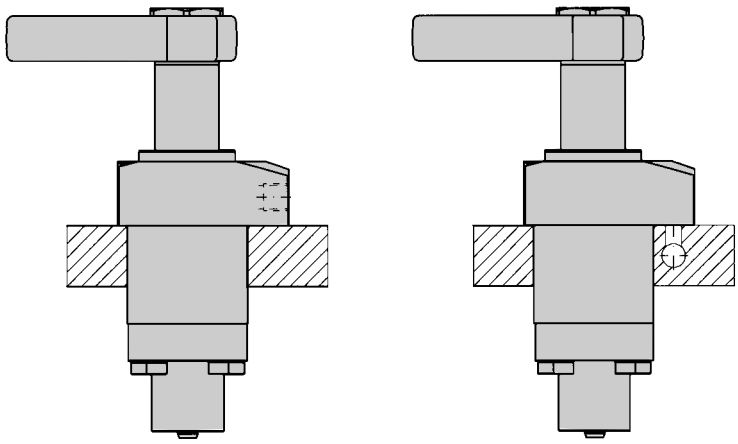

Dual Mounting Capability
Standard Fittings or Manifold Mounting

APPLICATIONS: Automation-type swing clamps are appropriate when it is essential to know exact swing-arm position for unrestricted workpiece loading and unloading. Due to the sturdy, reinforced swing mechanism and the extended helix rod, they are particularly suited for clamping fixtures with workpiece loading via handling systems; transfer lines; test systems for motors, gears, and axles; automated manufacturing systems; and assembly lines. Automation-type swing clamps are a further development of our proven swing-clamp line to improve process safety in linked clamping systems.

REINFORCED SWING MECHANISM WITHOUT OVERLOAD PROTECTION: The safety-clutch mechanism normally incorporated into our swing clamps is omitted in this design. In case of a slight collision with the clamping arm during loading and unloading, the angular position of the swing-clamp arm will be exactly maintained. Using a heavier clamping arm or swinging too quickly (due to high fluid flow rate) will also not de-clutch the swing arm and affect arm position. The reinforced swing mechanism endures a collision of the clamping arm with the workpiece during clamping up to a pressure of 1500 psi.

POSITION CONTROL: The helix rod protrudes through the clamps bottom cover, allowing pneumatic or electrical control of piston position outside the chip and coolant area. As an accessory, a pneumatic position control is available, and is shown attached to the bottom of the clamp in the photo. A brass control slide is displaced in a stainless housing. The slide opens and closes bore holes, so that a pressure switch or a differential pressure switch can signal the position “clamped” and “unclamped”. It is also possible to install this control directly in the fixture body by means of drilled air passages.

STANDARD WIPER: Swing clamps are furnished with a Viton® wiper as standard. Viton® has a high chemical resistance when using aggressive cutting fluids.

OPTIONAL METALLIC WIPER: This optional, additional wiper protects the Viton® wiper against physical damage, e.g. by hot chips. The swing clamp body is prepared for mounting the metallic wiper, which consists of a radially floating wiping disk and a retaining disk which is pressed onto the existing collar.

DESIGN CONSIDERATIONS: Due to the missing overload protection device, assembly and disassembly of the clamping arm has to be made carefully despite the reinforced swing mechanism. When tightening and untightening the fixing nut, the clamping arm or the hex socket in the piston have to be backed up. It is recommended to tighten and untighten in the swivel area (unclamped). Frequent collisions with the clamping arm in radial direction have to be avoided.

Please see our web catalog for additional information.

Swing Clamp Arms

7500 psi max
Single and double acting

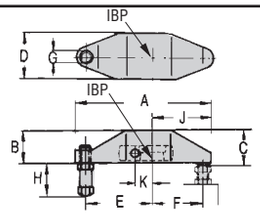

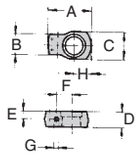

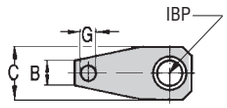

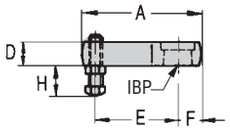

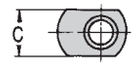

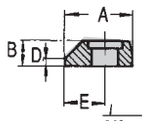

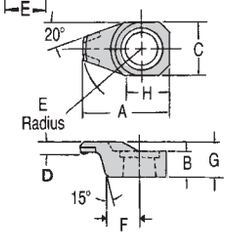

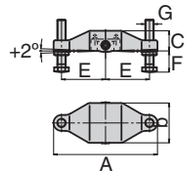

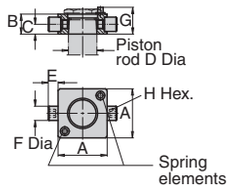

Dimensions for Customer Manufactured Arms

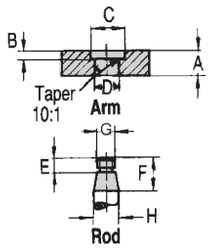

Standard Arms, Including Carrier

Part No.	Clamp Size	A	B	C	D	E	F	G	H Max.	J	K
CLR-302-SCA	2 & 3 Series	4.8	1.18	1.24	1.73	2.36	1.77	3/8-16	2.5	2.09	0.57
CLR-502-SCA	5 Series	7.28	1.77	1.85	2.3	3.27	2.95	5/8-11	3.13	3.43	0.88
CLR-602-SCA	6 Series	8.0	2.13	2.22	3.23	3.62	3.23	5/8-11	3.75	3.74	1.1
CLR-702-SCA	7 Series	8.78	2.32	2.42	3.86	3.94	3.54	3/4-10	4.13	4.33	1.3

Carriers Only

Part No.	Clamp Size	A	B	C	D	E	F	G Dia.	H
CLR-3542-093-SCA	2 & 3 Series	1.81	1.02	1.26	0.63	0.33	0.57	.3150	0.63
CLR-3542-094-SCA	5 Series	2.32	1.26	1.57	0.91	0.39	0.83	.3937	0.87
CLR-3542-132-SCA	6 Series	3.23	1.75	2.28	1.1	0.43	1.1	.4724	1.34
CLR-3542-096-SCA	7 Series	3.54	2.2	2.68	1.34	0.51	1.3	.5512	1.42

Tapped And Untapped Half Arms

Part No.	Clamp Size	Style	A	B	C	D	E	F	G	H Max.
CLR-301-SCA	2 & 3 Series	Tapped	2.95	0.63	1.26	0.63	1.97	0.63	3/8-16	2.52
CLR-3921-016-SCA		Untapped					—		—	—
CLR-501-SCA	5 Series	Tapped	4.53	0.87	1.89	0.91	2.95	0.98	5/8-11	3.11
CLR-3921-017-SCA		Untapped					—		—	—
CLR-601-SCA	6 Series	Tapped	5.51	1.1	2.36	1.1	3.74	1.18	M16	3.11
CLR-3921-021-SCA		Untapped					—		—	—
CLR-701-SCA	7 Series	Tapped	7.01	1.57	3.07	1.34	4.72	1.57	3/4-10	3.86
CLR-3921-018-SCA		Untapped					—		—	—

Short Arms

Part No.	Clamp Size	A	B	C	D	E
CLR-3548-159-SCA	2 & 3 Series	1.61	0.63	1.26	0.24	0.98
CLR-3548-165-SCA	5 Series	2.4	0.91	1.89	0.24	1.46
CLR-3548-304-SCA	6 Series	2.99	1.1	2.36	0.43	1.77
CLR-3548-163-SCA	7 Series	3.54	1.34	3.07	0.55	2.05

Thin-Nose Arms

Part No.	Clamp Size	A	B	C	D	E	F	G	H
CLR-3548-238-SCA	2 & 3 Series	2.03	0.61	1.26	0.26	1.32	0.78	0.83	1.03
CLR-3548-236-SCA	5 Series	2.99	0.89	1.81	0.35	1.97	0.88	1.1	1.31
CLR-3548-301-SCA	6 Series	3.94	1.1	2.6	0.43	2.52	1.72	1.34	1.94
CLR-3548-302-SCA	7 Series	4.84	1.34	2.95	0.51	3.25	1.84	1.57	2.13

Double Arms, Including Carrier

Part No.	Clamp Size	A	B	C	D	E	F Max.
CLR-0354-131-SCA	2 & 3 Series	5.43	2.32	1.12	M10	2.36	2.52
CLR-0354-132-SCA	5 Series	7.72	2.95	1.5	M16	3.27	3.11
CLR-0354-133-SCA	6 Series	8.5	3.35	1.85	M16	3.62	3.11
CLR-0354-134-SCA	7 Series	9.29	4.13	2.2	M20	3.94	3.86

Carriers For Double Arms

Part No.	Clamp Size	A	B	C	D Dia	E	F Dia	G*	H Hex
CLR-0354-141-SCA	2 & 3 Series	1.69	0.63	0.3	0.79	0.35	0.39	0.85	M5
CLR-0354-142-SCA	5 Series	2.17	0.91	0.43	1.26	0.43	0.63	1.14	M8
CLR-0354-143-SCA	6 Series	2.48	1.1	0.59	1.57	0.47	0.71	1.38	M8
CLR-0354-144-SCA	7 Series	3.03	1.34	0.67	1.70	0.59	0.79	1.61	M8

** Stop surface for spring elements.*

Customer Manufactured Arms

Clamp Size	A	B	C Dia	D Dia (10:1 Taper)	E	F	G	H Dia
2 & 3 Series	0.63	0.16	0.94	.7815 / .7835	0.39	0.83	M45x1.5	0.79
5 Series	0.91	0.2	1.34	1.2539 / 1.2559	0.47	1.1	M28x1.5	1.26
6 Series	1.1	0.2	1.81	1.5689/1.5709	0.47	1.34	M35x1.5	1.57
7 Series	1.34	0.24	2.2	1.9626 / 1.9646	0.51	1.57	M45x1.5	1.97

SWIFTSURE®

CARR LANE ROEMHELD MFG. CO.

Sales—Phone (314) 647-6200 Fax (314) 647-5736
Engineering—Phone 1-800-827-2526 Fax (636) 386-8034

Air-Powered Swing Clamps

100 psi air max
Double acting only

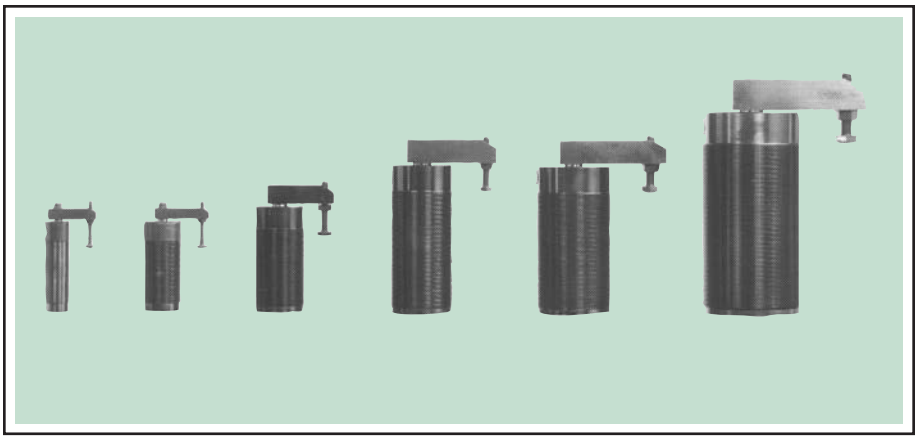

All Threaded

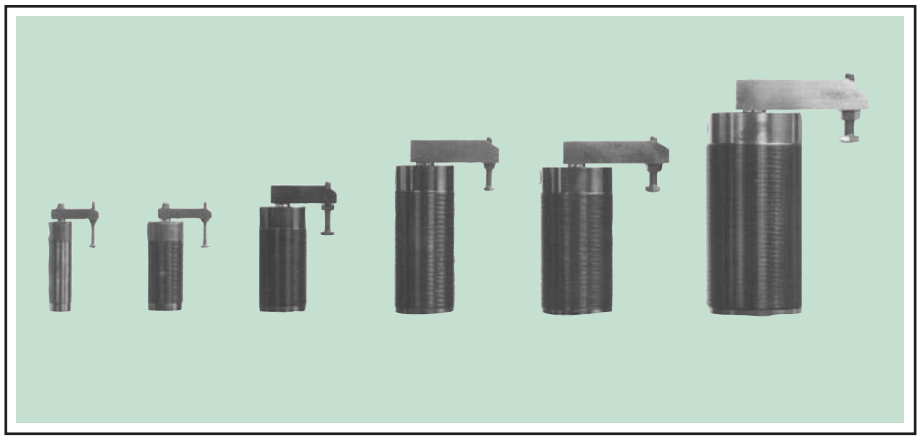

Flange Base

- **Use when light clamping force is desired**
- **Operates by air…no hydraulic power source needed**
- **Available with standard or long arm**
- **Double acting…clamp and return by air pressure**
- **Choice of six sizes**

CLAMPING ACTION: Applying air pressure to upper port swings clamping arm 90° over the workpiece, then clamps down.

Note: Arm also moves down while swinging (see chart for stroke during swing). To unclamp, switch air pressure to the lower port. Choose part number for clockwise or counterclockwise rotation into clamping position.

MOUNTING FLANGE BASE: Fasten base to fixture with four cap screws. Mount in any position horizontal or vertical.

MOUNTING, ALL THREADED: Mount in a bored hole, using the two locknuts furnished.

DESIGN CONSIDERATIONS: Do not use with hydraulic fluid, or above 100 psi (87 psi with long arm). Use an air check valve between the air supply and the 4-way air valve and clamps, and periodically check for leaks. Any leaks there would cause clamping pressure loss if the shop air supply fails. To ensure long clamp life, we recommend installing an Air Extractor/Dryer, page 118 before the Filter/Regulator/Lubricator.

CLAMP ARM: Can be mounted to start its 90° swing from any of four positions, 90° apart. Standard-length arm is furnished with clamp. Order long arm separately. Adjustable contact bolt furnished.

NOTE: These air clamps do not have safety clutch like hydraulic swing clamps.

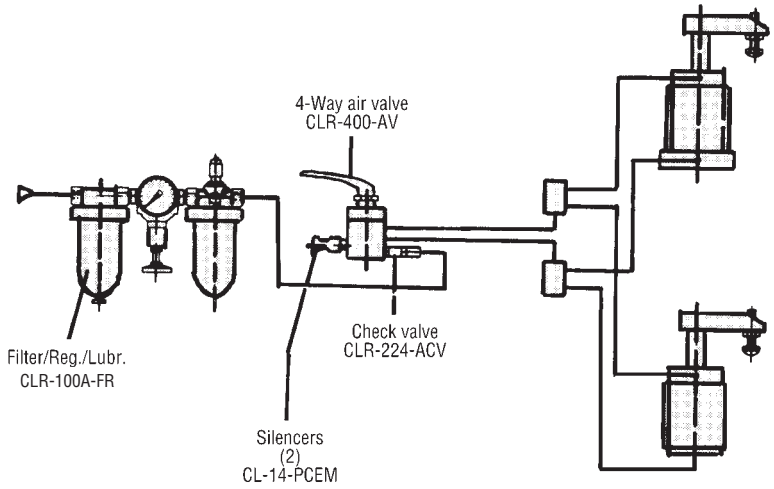

Connection Example

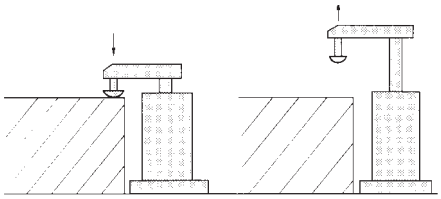

Zero-degree swing angle (clamps straight down) available by special order. Please allow adequate delivery time.

Air-Powered Swing Clamps

100 psi air max
Double acting only

New miniature size for light-force applications where space is at a premium.

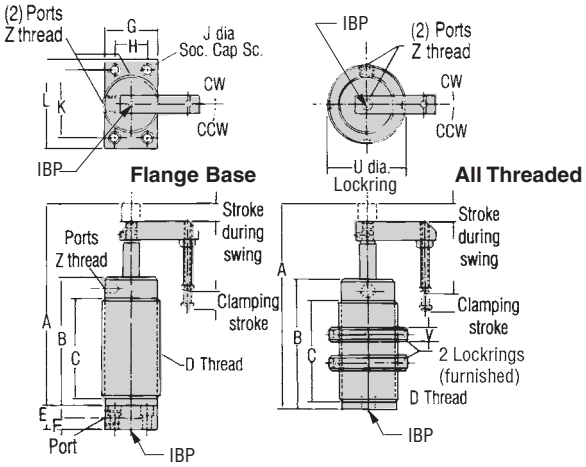

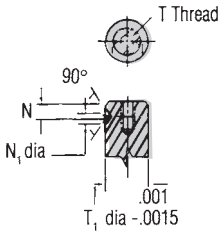

Rod Dimensions

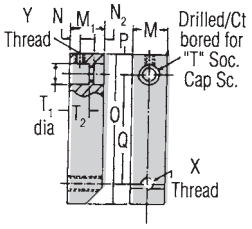

Standard Arm

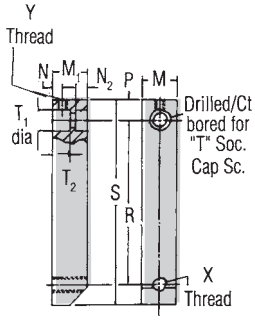

Long Arm

Maximum clamping force std. arm, at 100 psi (air)	20 Lbs	41 Lbs	107 Lbs	167 Lbs	277 Lbs	466 Lbs
Max. air pressure, std. arm (psi)	100	100	100	100	100	100
Max. air pressure, long arm (psi)	87	87	87	87	87	87
Minimum air pressure (psi)	58	58	58	58	58	58
Clamping stroke	9/32	9/32	13/32	19/32	19/32	23/32
Stroke during swing	9/32	9/32	5/16	21/32	21/32	29/32
A, flanged/all threaded	3-27/32 3-25/32	3-27/32 3-25/32	4-1/2	6-9/16	6-9/16	8-29/32
B, flanged/all threaded	2-23/32 2-5/8	2-23/32 2-5/8	3-3/16	4-1/2	4-1/2	6-1/4
C	1-7/8	1-7/8	2-3/8	3-17/32	3-17/32	5-3/32
D	M20x1.0	M30x1.5	M40x1.5	M50x1.5	M60x1.5	M80x1.5
E	15/32	15/32	5/8	7/8	7/8	1
F	3/16	3/16	3/8	1/2	1/2	9/16
G	3/4	1-3/16	1-1/2	1-31/32	2-1/4	3
H	—	.669	.906	1.181	1.575	2.165
J dia	1/4	1/4	1/4	5/16	5/16	3/8
K	1.378	1.693	1.969	2.362	2.598	3.465
L	1-31/32	2-3/8	2-9/16	3-5/32	3-11/32	4-11/32
M	15/32	15/32	19/32	3/4	3/4	1
M_1	11/32	11/32	19/32	3/4	3/4	1
N	.138	.138	.138	.157	.157	.236
N_1	.138	.138	.138	.157	.157	.236
N_2	—	—	.236	.275	.275	.354
O	1-15/32	1-21/32	2-1/16	2-3/4	3-5/16	4-1/8
P	9/32	9/32	13/32	15/32	15/32	19/32
Q	1	1-3/16	1-3/8	2	2-3/8	2-15/16
R	1-9/16	1-31/32	2-5/32	2-15/16	3-9/16	4-7/16
S	2-1/16	2-7/16	2-27/32	3-3/4	4-1/2	5-1/2
T	M4x10*	M4x10*	M5x10	M6x14	M6x14	M8x17
T_1 dia	.315	.315	.472	.591	.591	.787
T_2	.276	.276	.276	.315	.315	.433
U dia	1-3/8	1-3/4	2-3/8	2-3/4	3-5/32	4-11/32
V	3/8	3/8	3/8	15/32	19/32	25/32
X	M4x0.7	M4x0.7	M6	M6	M8	M10
Y	M3x0.5	M3x0.5	M4x0.7	M4x0.7	M4x0.7	M6
Z	#10-32	#10-32	#10-32	1/8 NPT	1/8 NPT	1/4 NPT
Wt., flanged/all threaded (lbs)	1.0/0.8	1.2/0.9	1.8/1.1	4.0/2.8	5.3/3.7	12.5/9.5
Part no., flanged base CW	**CLR-1872-104-ASC**	**CLR-1873-104-ASC**	**CLR-1874-104-ASC**	**CLR-1875-104-ASC**	**CLR-1876-104-ASC**	**CLR-1877-104-ASC**
Part no., flanged base CCW	**CLR-1872-204-ASC**	**CLR-1873-204-ASC**	**CLR-1874-204-ASC**	**CLR-1875-204-ASC**	**CLR-1876-204-ASC**	**CLR-1877-204-ASC**
Part no., all threaded CW	**CLR-1872-304-ASC**	**CLR-1873-304-ASC**	**CLR-1874-304-ASC**	**CLR-1875-304-ASC**	**CLR-1876-304-ASC**	**CLR-1877-304-ASC**
Part no., all threaded CCW	**CLR-1872-404-ASC**	**CLR-1873-404-ASC**	**CLR-1874-404-ASC**	**CLR-1875-404-ASC**	**CLR-1876-404-ASC**	**CLR-1877-404-ASC**
Spare clamping arm, STD	**CLR-0187-201-ASCA**	**CLR-0187-301-ASCA**	**CLR-0187-401-ASCA**	**CLR-0187-501-ASCA**	**CLR-0187-601-ASCA**	**CLR-0187-701-ASCA**
Spare clamping arm, long	**CLR-0187-202-ASCA**	**CLR-0187-302-ASCA**	**CLR-0187-402-ASCA**	**CLR-0187-502-ASCA**	**CLR-0187-602-ASCA**	**CLR-0187-702-ASCA**
Spare lockring	**CLR-200-ASCA**	**CLR-300-ASCA**	**CLR-400-ASCA**	**CLR-500-ASCA**	**CLR-600-ASCA**	**CLR-700-ASCA**

Arm not counterbored (for capscrew).* ***To avoid damage, clamps must take at least one full second to clamp.*

Edge Clamps

7500 psi max
Single acting

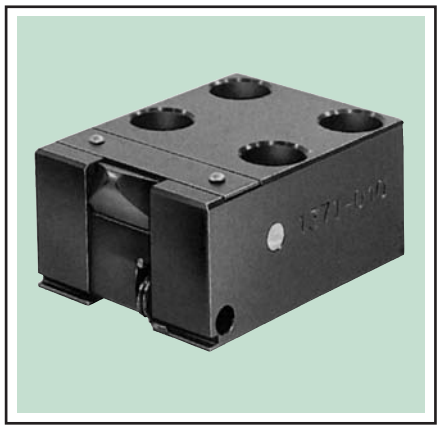

Low Profile

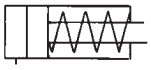

Symbol

- **Grips side of workpiece . . . pushes forward and down**
- **Ideal when clamping from above is difficult**
- **Down-holding force is 1/3 of total clamping force**
- **Sits low yet clamps high . . . just below the cutter path to reduce vibration**
- **Choice of three sizes**

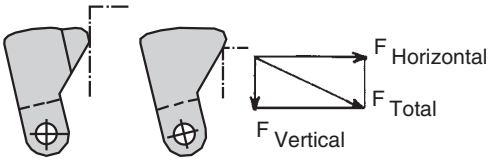

Low-profile edge clamps can be used to grip the side of a workpiece for machining clearance, or to clamp over the top edge.

CLAMPING ACTION: Fluid pressure advances the cylinder, which in turn pivots the nose forward and down to grip side of workpiece. Spring return.

MOUNTING: Fasten with four socket-head cap screws. 1/4 BSPP connection. Same unit may be mounted without external plumbing lines. To manifold mount, order CLR-3000-347-SW O-ring and CLR-810-F port plug.

CONSTRUCTION: Internal cylinder pushes pivoting nose. Nose cover keeps out chips and debris. Body made from carbon steel, black oxide finish. Forged, alloy steel nose, hardened to RC 56-58. Nose is through-hardened so that it can be ground to suit the workpiece if desired.

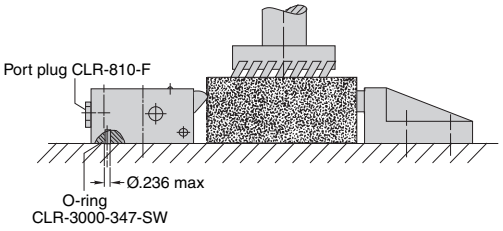

Low-profile edge clamps can be mounted low, yet clamp up high, just below the cutter path to reduce vibration. Edge clamps can be manifold mounted on a flat surface by unplugging the bottom port and installing o-ring CLR-3000-347-SW, then plugging the 1/4 BSPP port with a CL-810-F port plug.

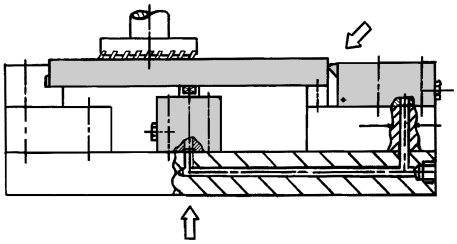

Edge clamp used with a block-type work support, both components manifold mounted for easy chip removal.

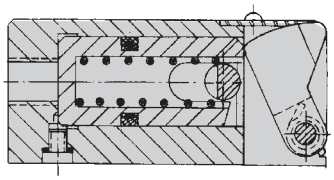

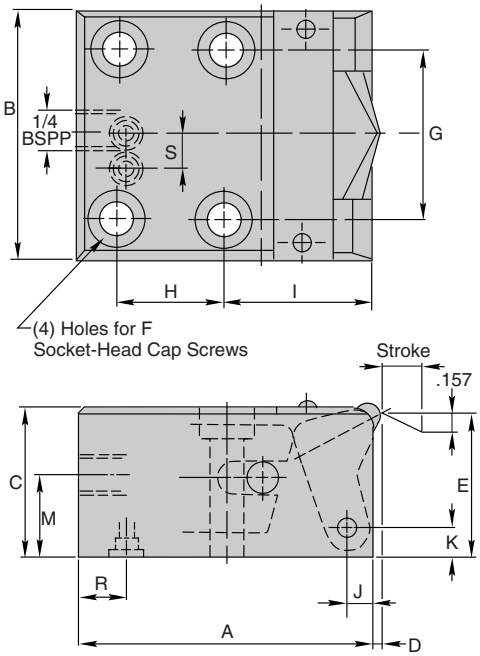

Clamping force (lbs)	7500 psi	2000	4700	9300
	6000 psi	1600	3700	7400
	5000 psi	1300	3100	6200
	4000 psi	1100	2500	5000
	3000 psi	790	1900	3700
Clamping stroke		.31	.39	.39
Fluid required (cu. in.)		.10	.30	.62
Piston dia		16mm	25mm	36mm
Force per 1000 psi (lbs)		260	612	1223
Max. operating pressure (psi)		7500	7500	7500
A		2.677	3.543	3.780
B		1.97	2.36	3.15
C		1.26	1.57	1.97
D		.079	0	.079
E		1.220	1.535	1.929
F		5/16 or M8	5/16 or M8	3/8 or M10
G		1.260	1.575	2.205
H		1.063	1.496	1.496
I		1.260	1.654	1.811
J		.217	.236	.315
K		.236	.354	.433
M		.75	.91	1.06
R		.512	.551	.630
S		0	0	.551
Weight (lbs)		2.0	2.5	4.6
Part No.		**CLR-110-EC**	**CLR-310-EC**	**CLR-410-EC**

SWIFTSURE®

CARR LANE ROEMHELD MFG. CO.

Sales—Phone (314) 647-6200 Fax (314) 647-5736
Engineering—Phone 1-800-827-2526 Fax (636) 386-8034

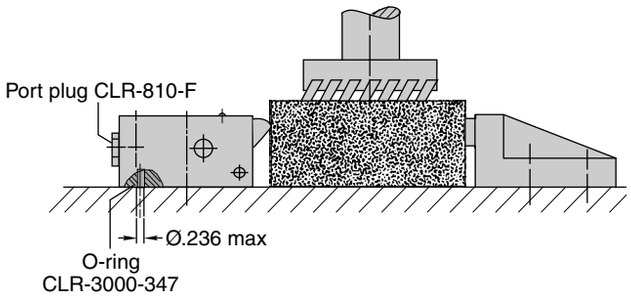

Low-profile edge clamps can be mounted low, yet clamp up high, just below the cutter path to reduce vibration. Edge clamps can be manifold mounted on a flat surface by unplugging the bottom port and installing o-ring CLR-3000-347, then plugging the 1/4 BSPP port with a CL-810-F port plug.

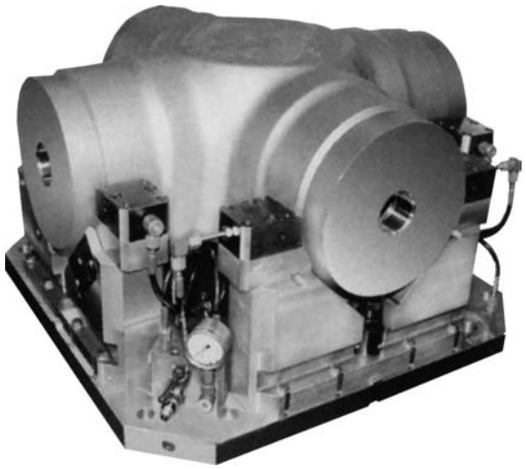

This fixture uses two opposing edge clamps to self-center a large diameter in a V block.

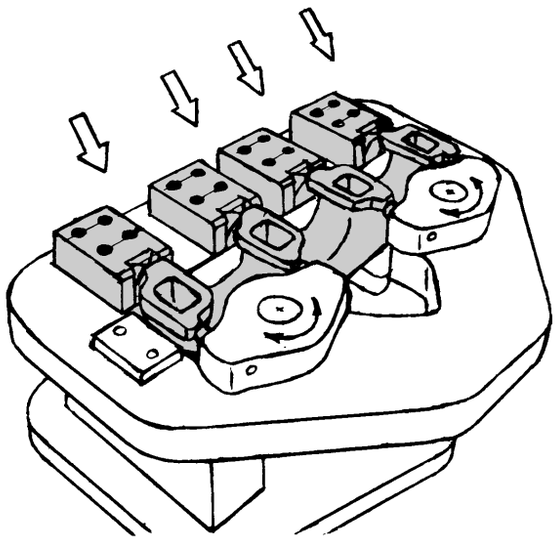

Milling fixture for exhaust manifolds, with four edge clamps and two swiveling backstops.

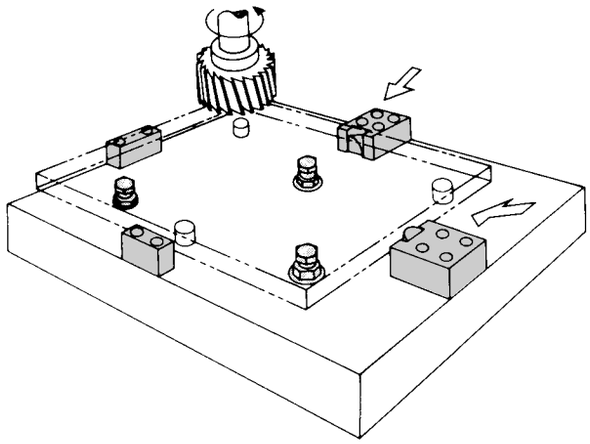

Workpiece supported by three fixed rest buttons and three fluid-advanced work supports, clamped by two edge clamps against opposing backstops. All components are manifold mounted for easy chip removal.

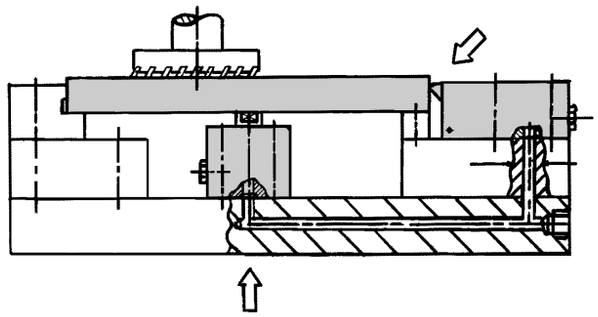

Edge clamp used with a block-type work support, both components manifold mounted for easy chip removal.

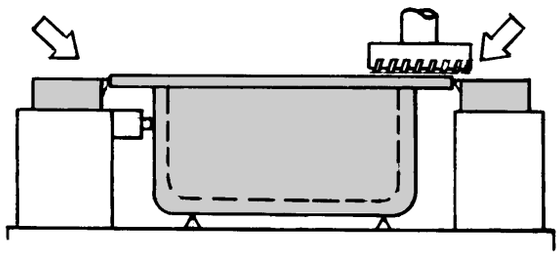

Clamping on a thin flange with opposing clamps, just below the machining plane, while locating from the housing. Note: opposing clamps require a pilot-operated check valve.

CARR LANE ROEMHELD MFG. CO.

Sales—Phone (314) 647-6200 Fax (314) 647-5736
Engineering—Phone 1-800-827-2526 Fax (636) 386-8034

Push Clamps/Cylinders

Hex Head
See Website

Mini
page 32

Standard
page 33

Double Wiper
page 34

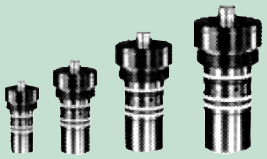

Double Acting
page 37.1

Screw-In Type Cylinder
See Website

Locking Piston Cylinder
See Website

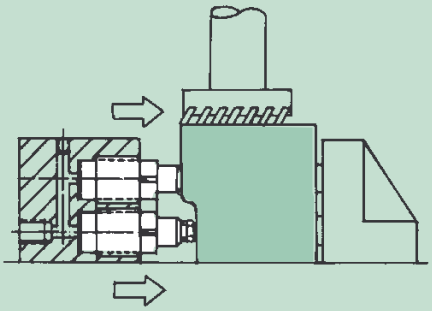

Threaded-Body Push Clamps
Very compact. May be mounted using accessory brackets or screwed directly into fixture. Direct mounting lets you locate the clamps very close to each other...as close as 19/32 inch between centers.

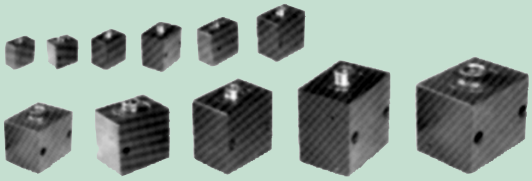

Block Clamps Cylinders
page 38

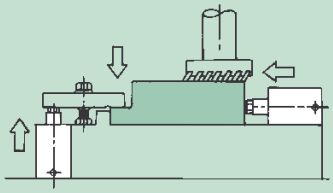

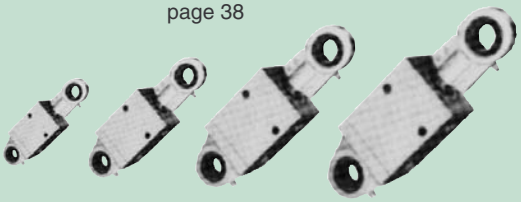

Block Clamps with Bearing Eyes
See Website

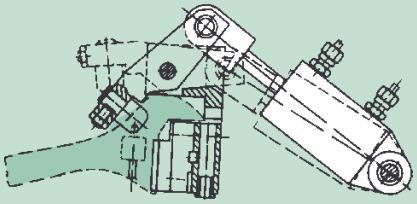

Block Clamps
Easy to mount on flat surfaces. Mounts either horizontally or vertically. Large sizes are often used for presswork applications (up to 180 tons). Available with spherical-bearing mounts at both ends for clevis mounting, to operate levers and linkages.

Locking Piston Type, see p. 37.5.

See Website

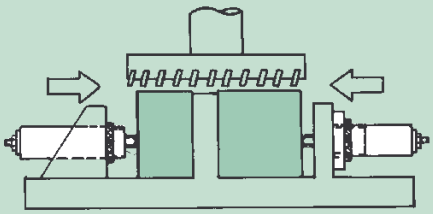

Threaded-Collar Push Clamps
Great for mounting through fixture walls. May also be mounted using accessory brackets.

Threaded-Body Push Clamps - Mini

7500/2300 psi max
Single acting

Tube Mount (Metric Only) **Manifold Mount**

- **Can be mounted very close together**
- **High force in a small size**
- **Mount using accessory brackets or screw directly into fixture**
- **Positive stroke stop and long plunger guide for superior reliability**
- **Choice of six sizes**

****Do not use NPT fittings**

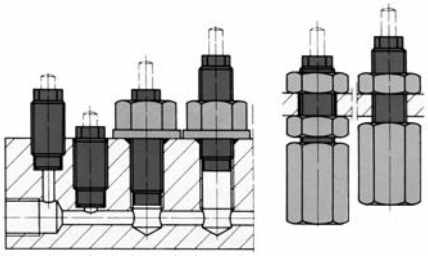

DESCRIPTION: These threaded body cylinders are particularly suitable for clamping of smaller workpieces in multiple clamping fixtures. Sealing is made by connecting directly to compression nut or by the included sealing washer. Multiple mounting options allow versatility when designing your fixture. Offered as flush mount piston or extended piston. High-speed cylinders are offered at a lower max. pressure.

IMPORTANT NOTES: These cylinders may not be subjected to load in the retracted position. The tube connection model has no stop for the tube, so it cannot be used for pre-mount of the compression sleeve. Please protect cylinders from chips and coolant.

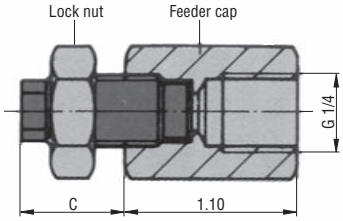

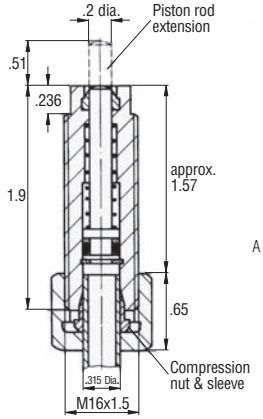

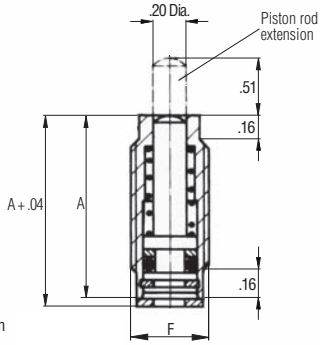

Clamping Force (lbs)	7500 psi	580		
	6000 psi	470		
	5000 psi	390		
	4000 psi	310		
	3000 psi	230		
Mounting Type		**Tube Mount**	**Manifold Mount**	
Stroke		**0.39**	**0.197**	**0.39**
Piston dia (In)		0.315	0.315	0.315
Min Psi		75	75	75
Spring return force (lbs)		3.4	3.4	3.4
A		—	1.06	1.57
B min/max		—	.43 / .95	.43 / 1.46
C		—	0.67	1.18
Seating torque (lbs)		8	8	8
Weight (lbs)		0.12	0.04	0.05

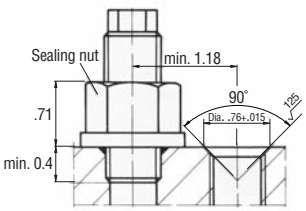

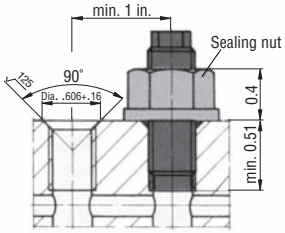

USA

F Thread	—	1/2 - 20	1/2 - 20
Part No.	—	**CLR-801-TB**	**CLR-802-TB**
Lock Nut	—	**CLR-408-TBA**	
Sealing Washer	—	**CLR-3000-183-SW**	
Sealing Nut	—	**CLR-508-TBA**	
Feeder Cap	—	**CLR-308-TBA**	
Mounting Block	—	**CLR-108-TBA**	

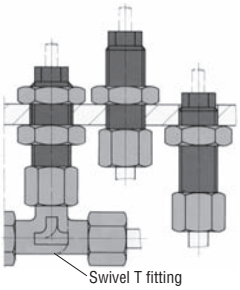

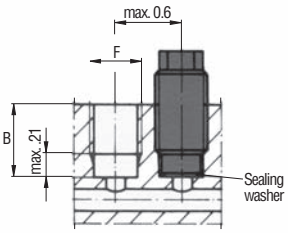

METRIC

F Thread	—	M12 X 1.5	M12 X 1.5
Part No.	**CLR-1459-001-TB**	**CLR-1458-001-TB**	**CLR-1458-002-TB**
Part No. with ext rod	**CLR-1459-011-TB**	**CLR-1458-011-TB**	**CLR-1458-012-TB**
Part No., High Speed 2300 psi max	**CLR-1459-101-TB**	**CLR-1458-101-TB**	**CLR-1458-102-TB**
High Speed w/ ext rod 2300 psi max	**CLR-1459-111-TB**	**CLR-1458-111-TB**	**CLR-1458-112-TB**
Lock Nut	**CLR-3300-409-TBA**	**CLR-3300-408-TBA**	
Sealing Washer	—	**CLR-3000-036-SW**	
Sealing Nut	**CLR-3300-407-TBA**	**CLR-3300-406-TBA**	
Swivel T Fitting	**CLR-9208-035-F**	—	
Swivel Elbow	**CLR-9208-036-F**	—	
Compression Nut	**CLR-9208-100-F**	—	
Compression Sleeve	**CLR-9208-101-F**	—	
Feeder Cap	—	**CLR-3467-064-TBA**	

Threaded-Body Push Clamps

7500 psi max
Single acting

- **Can be mounted very close together**
- **High force in a small size**
- **Mount using accessory brackets or screw directly into fixture**
- **Positive stroke stop and long plunger guide for superior reliability**
- **Choice of six sizes**

****Do not use NPT fittings**

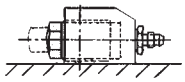

Figure 1

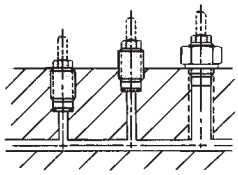

Figure 2

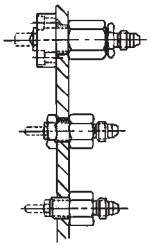

Figure 3

Mounting Options

See page 37 for accessories

MOUNTING ON FIXTURE BASE: (Figure 1) Fasten mounting block to fixture. Screw clamp into block. (See table below for recommended seating torque. Sealing washer provided). Block has male 37° fluid connection.

MANIFOLD MOUNTING: (Figure 2) Screw clamp into tapped hole prepared as shown below. Supply fluid through passages drilled in fixture. Smallest size may be mounted with optional sealing nut. (Part no. CLR-508-TBA, 7/8 Hex. x. 46 thick).

MOUNTING THROUGH FIXTURE WALL: (Figure 3) (Through a tapped or bored hole). Secure clamp using optional locknut or mounting flange (two required for bored holes). Feeder cap required for fluid connection.

CONSTRUCTION: Steel plunger, casehardened and ground. Positive stroke stop prevents over-extending the plunger. Long plunger guide provides support against side loads. Do not load plunger in its retracted position. Carbon steel body, black oxide finish.

PLUNGERS: Choose solid, tapped, or swivel plunger. Tapped plunger accepts contact buttons...see page 128. Swivel plunger distributes force to prevent marring. Plunger extensions available by special order.

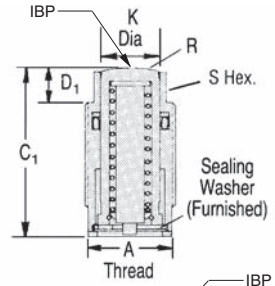

Symbol

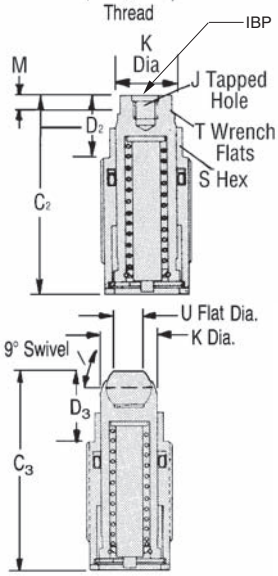

See page 128 for contact bolts

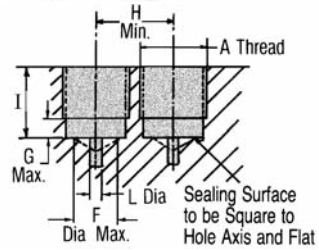

Manifold Hole Preparations

Clamping force (lbs)	7500 psi	1300	2300	3600	5700	9300
	6000 psi	1100	1900	2900	4500	7400
	5000 psi	900	1600	2400	3800	6200
	4000 psi	700	1200	1900	3000	5000
	3000 psi	500	900	1400	2300	3700
Max. clamping force (lbs)		1310	2340	3650	5700	9350
Stroke		.38	.47	.59	.63	.78
Fluid req'd (cu. in.)		.069	.147	.228	.479	.981
Piston area (sq. in.)		.175	.312	.487	.760	1.247
Force per 1000 psi (lbs)		175	312	487	760	1247
Max. oper. pressure (psi)		7500	7500	7500	7500	7500
A		7/8-14	1-1/8-12	1-1/4-16	1-1/2-16	1-7/8-16
C_1		1.50	1.81	2.19	2.34	3.44
C_2		1.78	2.06	2.59	2.69	3.88
C_3		1.80	2.09	2.73	2.86	—
D_1		.28	.38	.44	.53	.66
D_2		.56	.66	.81	.88	1.09
D_3		.56	.69	. 97	1.05	—
F dia		.47	.63	.78	1.00	1.25
G		.31	.34	.34	.44	.50
H		1.00	1.19	1.38	1.69	2.16
I	min.	.63	.78	.97	1.13	1.66
	max	1.53	1.41	1.75	1.81	2.75
J		1/4-20x1/4	1/4-20x1/4	5/16-18x5/16	5/16-18x5/16	1/2-13x1/2
K dia		.47	.63	.78	1.00	1.25
L dia		.19	.19	.19	.19	.19
M		.22	.22	.25	.28	.34
R		.75	1.00	1.25	1.56	2.00
S		.69	.94	1.69	1.25	1.69
T		.38	.50	.63	.75	.94
U		.28	.28	.41	.41	—
Seating torque (ft.-lbs)		29	36	43	58	163
Weight (lbs)		.18	.33	.48	.48	2.13
Part No., solid plunger		**CLR-000-TB**	**CLR-100-TB**	**CLR-200-TB**	**CLR-300-TB**	**CLR-400-TB**
Part No., tapped plunger		**CLR-001-TB**	**CLR-101-TB**	**CLR-201-TB**	**CLR-301-TB**	**CLR-401-TB**
Part No., swivel plunger		**CLR-010-TB**	**CLR-110-TB**	**CLR-210-TB**	**CLR-310-TB**	**—**
Spare sealing washer		**CLR-3000-840-SW**	**CLR-3000-179-SW**	**CLR-3000-180-SW**	**CLR-3000-843-SW**	**CLR-3000-181-SW**

Threaded-Body Push Clamps

7500 psi max
Single acting

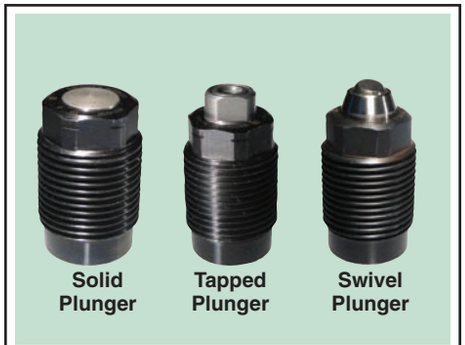

- **Special double rod wiper prevents contamination from cutting fluids**
- **Very little mounting space required**
- **High force in a small size**
- **Positive internal stop and long plunger bearing for rugged reliability**

CLAMPING ACTION: Fluid pressure advances plunger. Spring return.

CONSTRUCTION: Steel plunger, case hardened and ground. Positive stroke stop prevents over-extending the plunger. Do not load plunger in its retracted position. Carbon steel body, black oxide finish.

PLUNGERS: Choose solid, tapped, or swivel plunger. Tapped plunger distributes force to prevent marring. Plunger extensions available by special order.

Double Wiper

Solid Plunger

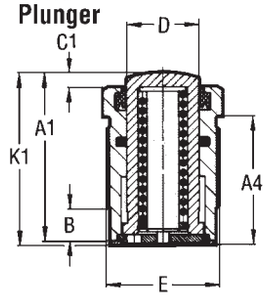

Tapped Plunger

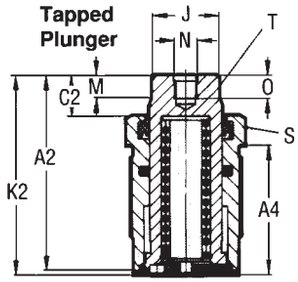

Swivel Plunger

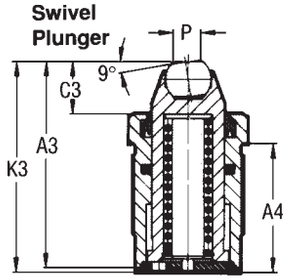

Sealing surface to be square to hole axis and flat

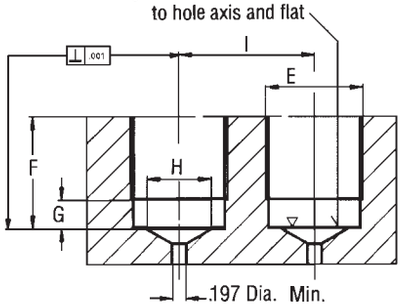

Manifold hole preparation

Clamping force (lbs)	7500 psi	1300	2300	3600	5700	9300
	6000 psi	1100	1900	2900	4500	7400
	5000 psi	900	1600	2400	3800	6200
	4000 psi	700	1200	1900	3000	5000
	3000 psi	500	900	1400	2300	3700
Piston DIA-D		.472	.630	.787	.984	1.260
Stroke		.39	.47	.59	.63	.79
Spring return force, min (lbs)		6.3	11.25	17.6	27.7	45
Min. oper. pressure (psi)		150	150	150	150	150
Fluid volume/(cu. in.)		.07	.15	.28	.48	.98
A1		1.16	1.78	2.16	2.28	3.34
A2		1.75	2.03	2.53	2.63	3.78
A3		—	—	2.69	2.78	3.78
A4		.98	1.30	1.66	1.75	2.81
B		.28	.31	.31	.44	.47
C1		.13	.13	.16	.19	.28
C2		.41	.38	.53	.56	.72
C3		.41	.44	.69	.72	.78
F min.		.63	.78	.94	1.09	1.66
F max.		.97	1.25	1.63	1.72	2.75
G max.		.31	.38	.38	.44	.50
H dia max.		.44	.63	.78	1.00	1.25
I min.		1.19	1.34	1.56	2.03	2.44
J dia		.44	.59	.75	.91	1.19
K1		1.50	1.84	2.19	2.34	3.44
K2		1.75	2.06	2.59	2.69	3.88
K3		1.81	2.13	2.75	2.88	3.94
M		.22	.22	.25	.28	.34
O		.25	.25	.31	.31	.50
P		.28	.28	.41	.41	.78
R		.78	1.00	1.25	1.56	1.97
S A/flats		.94	1.06	1.25	1.63	1.97
T A/flats		.38	.50	.67	.75	.94
Seating torque (ft. lbs)		30	37	44	59	167
Weight (lbs)		.18	.33	.49	.84	2.14

USA

E Body Thread	7/8 - 14	1-1/8 - 12	1-1/4 - 16	1-1/2 -16	1-7/8 -16
N Plunger Thread	1/4 - 20	1/4 - 20	5/16 -18	5/16 - 18	1/2 - 13
Part No., solid plunger	**CLR-1460-702-TB**	**CLR-1461-702-TB**	**CLR-1462-702-TB**	**CLR-1463-702-TB**	**CLR-1464-702-TB**
Part No., tapped plunger	**CLR-1460-703-TB**	**CLR-1461-703-TB**	**CLR-1462-703-TB**	**CLR-1463-703-TB**	**CLR-1464-703-TB**
Part No., swivel plunger	**CLR-1460-712-TB**	**CLR-1461-712-TB**	**CLR-1462-712-TB**	**CLR-1463-712-TB**	**CLR-1464-712-TB**
Part No., additional seal	**CLR-3000-840-SW**	**CLR-3000-179-SW**	**CLR-3000-180-SW**	**CLR-3000-843-SW**	**CLR-3000-181-SW**

Metric

E Body Thread	M22 X 1.5	M26 X 1.5	M30 X 1.5	M38 X 1.5	M48 X 1.5
N Plunger Thread	M6	M6	M8	M8	M12
Part No., solid plunger	**CLR-1460-100-TB**	**CLR-1461-100-TB**	**CLR-1462-100-TB**	**CLR-1463-100-TB**	**CLR-1464-100-TB**
Part No., tapped plunger	**CLR-1460-101-TB**	**CLR-1461-101-TB**	**CLR-1462-101-TB**	**CLR-1463-101-TB**	**CLR-1464-101-TB**
Part No., swivel plunger	**CLR-1460-110-TB**	**CLR-1461-110-TB**	**CLR-1462-110-TB**	**CLR-1463-110-TB**	**CLR-1464-110-TB**
Part No., additional seal	**CLR-3000-840-SW**	**CLR-3000-841-SW**	**CLR-3000-842-SW**	**CLR-3000-843-SW**	**CLR-3000-527-SW**

Application Examples

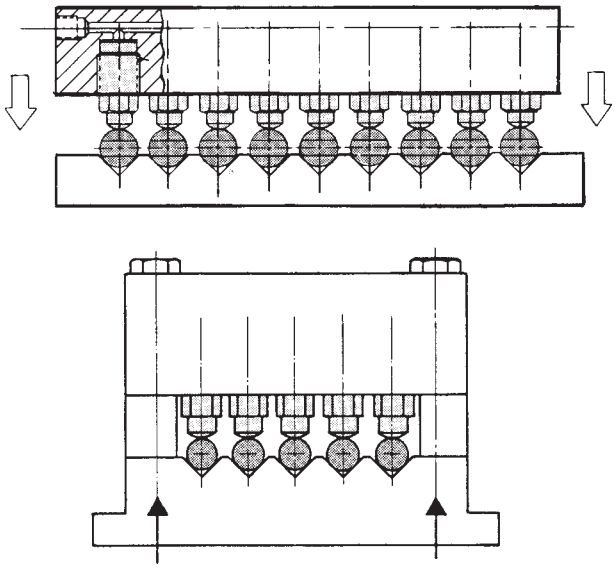

V-block fixtures allow very close workpiece spacing. Bottom example shows bridging bolt parallel to, and in the same plane as, the push clamps. This eliminates bending moments in the fixture.

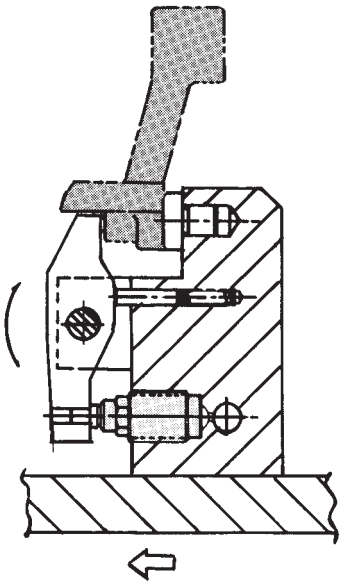

Custom clamping unit made using a pivoting lever with a return spring. By altering the lever ratio, you can make workpiece contact greater or less than clamp force.

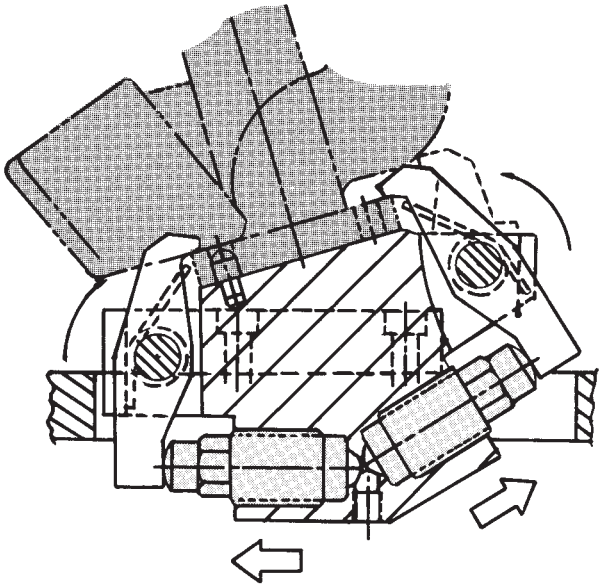

Twin clamping levers hold an exhaust manifold under extreme space limitations. Clamps are almost totally clear of workpiece area.

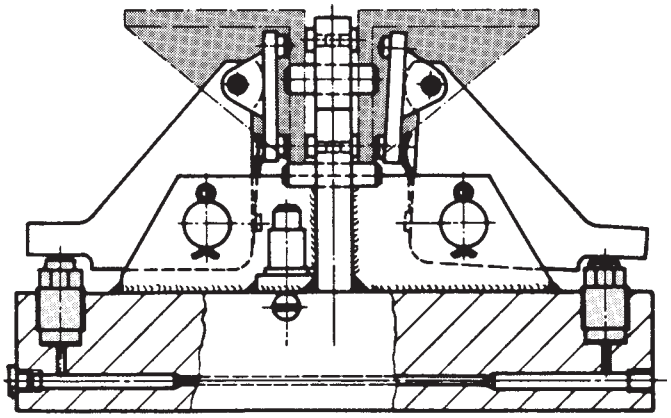

Pivoting levers clamp two angle brackets against a central locator. Each lever also has a pivoting contact pad to distribute clamping force evenly.

Threaded-Body Push Clamps

7500 psi max
Double acting

Double Acting

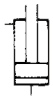

- **Manifold mounting provides space saving installation in fixture body.**
- **Hoses and tubing are eliminated.**
- **Double acting for positive return.**

**** Do not use NPT fittings**

CLAMPING ACTION: Double acting allows fluid pressure to advance and return the plunger, positive action return for special requirements in timing sequence.

CONSTRUCTION: Steel plunger, case hardened and ground. Housing, free cutting steel, burnished, black oxide finish.

MOUNTING: Space saving manifold mounting allows a hose and tube free supply of oil.

Single connection

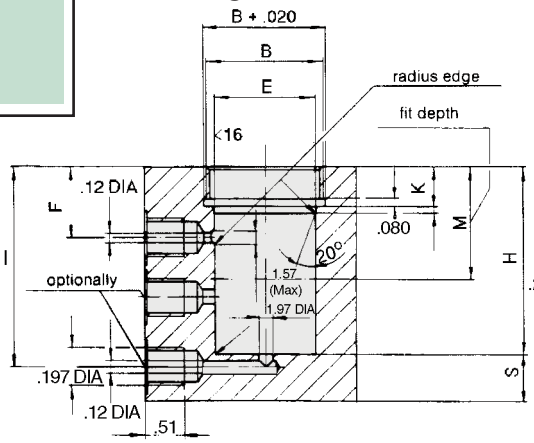

Series connection

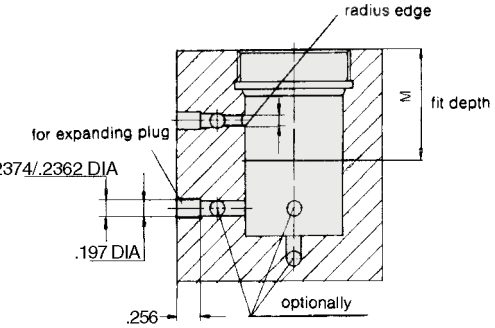

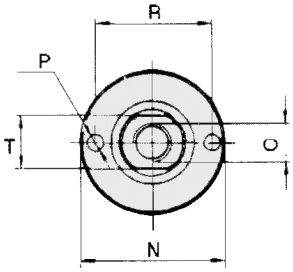

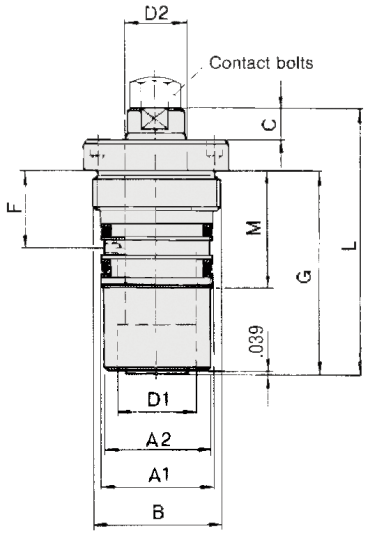

Clamping force (lbs)	7500 psi	2300	3800	5700	9300
	6000 psi	1900	3000	4600	7500
	5000 psi	1600	2500	3800	6200
	4000 psi	1200	2000	3000	5000
	3000 psi	1000	1500	2300	3700
Piston dia - D1		.630	.787	.984	1.260
Rod dia - D2		.394	.472	.630	.787
Stroke		.63	.79	.98	1.26
Fluid required, advance/retract (cu. in.)		.20/.12	.38/.25	.74/.44	1.57/.96
A1 dia		.866	1.1024	1.378	1.732
A2 dia		.827	1.024	1.299	1.654
C		.24	.28	.28	.39
E dia		.8661/8669	1.1024/1.1032	1.378/1.379	1.732/1.733
F		.75	.79	.98	1.10
G		1.88	2.09	2.56	2.83
H		1.898/1.882	2.095/2.079	2.567/2.551	2.843/2.827
I		2.09	2.44	2.83	3.43
K		.335	.413	.531	.610
L		2.559	2.638	3.228	3.701
M		1.201	1.240	1.555	1.752
N dia		1.22	1.46	1.73	2.13
P		.098	.165	.205	.165
R		.98	1.18	1.38	1.77
S (min)		.315	.394	.433	.512
T		.315	.394	.512	.669

USA

B Thread	1-1/8-16	1-1/4-16	1-9/16-16	2.0-16
O Thread	1/4-20x3/8	5/16-18x7/16	3/8-16x9/16	1/2-13x5/8
Part No.	**CLR-1471-701-TBD**	**CLR-1472-701-TBD**	**CLR-1473-701-TBD**	**CLR-1474-701-TBD**

Metric

B Thread	M26x1.5	M32x1.5	M40x1.5	M50x1.5
O Thread	M6x12	M8x12	M10x15	M12x15
Part No.	**CLR-1471-001-TBD**	**CLR-1472-001-TBD**	**CLR-1473-001-TBD**	**CLR-1474-001-TBD**

CARR LANE ROEMHELD MFG. CO.

Sales—Phone (314) 647-6200 Fax (314) 647-5736
Engineering—Phone 1-800-827-2526 Fax (636) 386-8034

Block Clamps

7500 psi max
Single and double acting

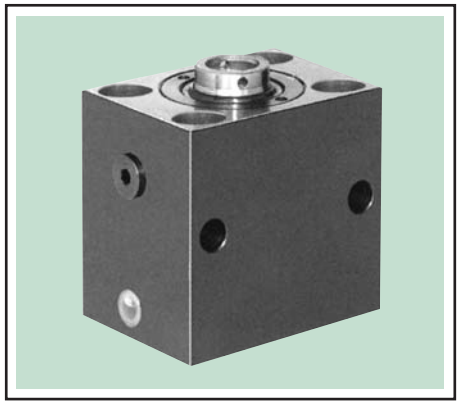

- **Easy to mount on flat surfaces**
- **Excellent for punching and assembly operations (very high forces available)**
- **Mount either horizontally or vertically**
- **Available with short or long stoke**
- **Choice of eleven sizes**
- **Do not use NPT fittings**

Symbol

Symbol

CLAMPING ACTION: Fluid pressure advances plunger. Spring return. Optional fluid-return version (double-acting).

STROKE LENGTH: Short-stroke version is more compact. Choose it whenever possible. Longer strokes than listed below are available in all sizes…please contact factory.

MOUNTING: Either fasten with long cap screws through the block and threaded into fixture, or tap holes in block to accept screws. See below for locations to drill additional holes if desired. If clamping thrust is not backed up by the fixture, a support should be provided to prevent slight screw shifting in the mounting holes…see example below. Support may be a rectangular strip or dowel pins (height should be at least 1/3 of B dimension). Male 37° fluid connection (two with double-acting clamps).

CONSTRUCTION: Steel plunger, case hardened and ground. Body made from carbon steel, or nodular iron in larger sizes. Spring-return versions have a sintered-metal vent filter to keep out dirt. If flood coolant could enter through the vent, replace vent filter with a CLR-815-AF air-vent fitting.

ACCESSORIES: Contact button for plunger recommended…see page 128.

OPTIONAL VITON SEALS: For high-temperature applications (up to 300°F maximum) we offer viton seals as an option in all sizes. Please contact factory for more information.

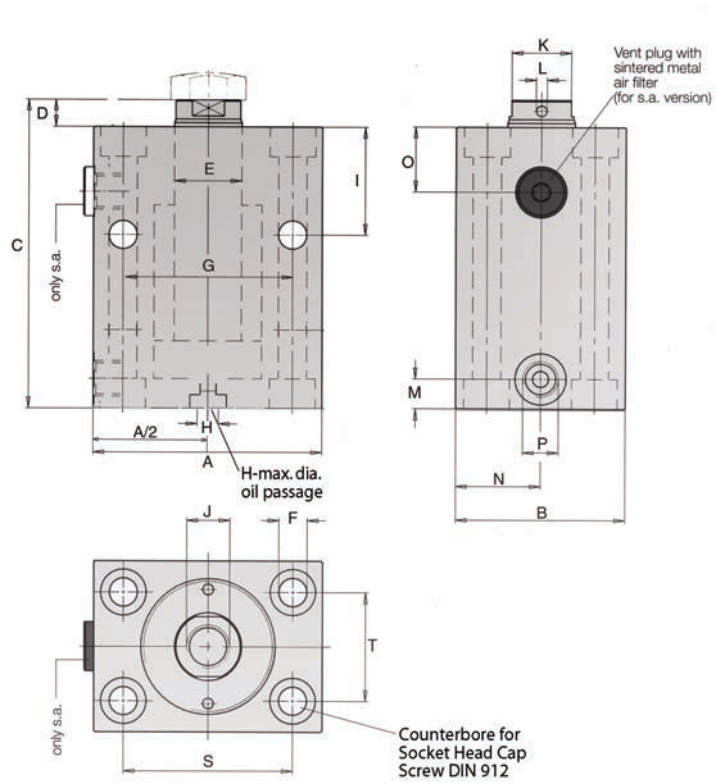

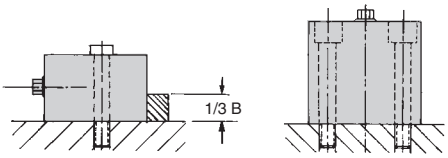

Horizontal mounting

Vertical mounting

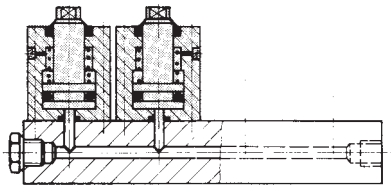

Manifold mounting option eliminates external plumbing.

For radius pointed, or swivel contact bolts, see page 128.

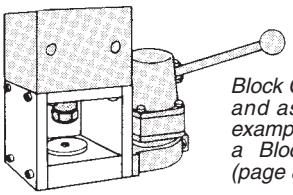

Block Clamps are ideal for punching and assembly operations. In this example, a small press is made using a Block Clamp and Hand Pump (page 81).

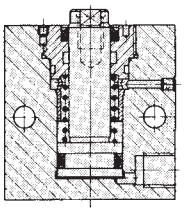

SWIFTSURE®

CARR LANE ROEMHELD MFG. CO.

Sales—Phone (314) 647-6200 Fax (314) 647-5736
Engineering—Phone 1-800-827-2526 Fax (636) 386-8034

Block Clamps

7500 psi max
Single and double acting

Clamping force (lbs)	7500 psi	2300	5700	9300	14600	22900	36300	58600	91200
	6000 psi	1900	4600	7500	11700	18300	29000	46900	72900
	5000 psi	1600	3800	6200	9700	15300	24200	39100	60800
	4000 psi	1200	3000	5000	7800	12200	19300	31300	48600
	3000 psi	900	2300	3700	5800	9200	14500	23400	36500
Piston Area (sq. in.)		.312	.760	1.247	1.950	3.050	4.833	7.791	12.150
Max. Oper. Pressure (psi)		7500	7500	7500	7500	7500	7500	7500	7500
A		2.38	2.56	2.97	3.34	3.94	4.94	6.31	7.88
B		1.38	1.75	2.19	2.50	2.94	3.75	4.75	5.94
C short stroke		2.44	2.81	3.34	3.50	3.94	4.56	5.19	5.69
C long stroke		3.81	4.00	4.34	4.50	4.94	5.88	7.06	8.06
D		.22	.28	.38	.38	.38	.56	.56	.59
E dia.		.39	.63	.79	.98	1.26	1.57	1.97	2.48
F dia. screw		1/4	5/16	3/8	3/8	7/16	5/8	3/4	7/8
G		1.181	1.969	2.165	2.480	2.992	3.740	4.724	6.220
H dia.		.19	.19	.19	.19	.19	.31	.31	.31
I		1.19	1.31	1.50	1.56	1.75	1.97	2.38	2.50
J		1/4-20 x15/32	3/8-16 x19/32	1/2-13 x19/32	5/8-11 x31/32	3/4-10 x1-3/16	1-8 x1-9/16	M30x40	M42x60
K		.31	.50	.63	—	—	—	—	—
L dia.		—	—	—	.16	.16	.16	.19	.22
M		.44	.44	.44	.44	.50	.66	.81	1.00
N		.69	.88	1.09	1.25	1.47	1.88	2.38	2.94
O		.66	.72	.88	.94	1.06	1.03	1.31	1.38
P-Port size		G1/4	G1/4	G1/4	G1/4	G1/4	G1/2	G1/2	G1/2
S		1.575	1.969	2.165	2.480	2.992	3.740	4.724	6.220
T		.866	1.181	1.378	1.575	1.772	2.559	3.150	4.252
Weight, short stroke (lbs.)		1.8	2.6	4.0	5.7	8.4	14.7	28.2	52.8
Weight, long stroke (lbs.)		1.9	4.2	5.9	7.9	11.6	21.5	43.6	81.4

Single Acting — USA

Stroke, short	.31	.31	.38	.38	.47	.47	.47	.47
Stroke, long	.78	.78	.78	.78	.78	1.0	1.25	1.25
Fluid reqd., short (cu. In.)	.10	.24	.48	.73	1.37	2.26	3.68	5.75
Fluid reqd., long (cu. In.)	.23	.57	.94	1.46	2.29	4.83	9.81	15.34
Spring return force (lbs)	11	31	44	61	92	97	170	270
Part No. short stroke w/ fittings	**CLR-100-BC**	**CLR-300-BC**	**CLR-400-BC**	**CLR-500-BC**	**CLR-600-BC**	**CLR-700-BC**	—	—
Part No. long stroke w/ fittings	**CLR-120-BC**	**CLR-320-BC**	**CLR-420-BC**	**CLR-520-BC**	**CLR-620-BC**	**CLR-730-BC**	—	—
Part No, short stroke, Manifold Mount	**CLR-1511-705B-BC**	**CLR-1513-705B-BC**	**CLR-1514-705B-BC**	**CLR-1515-705B-BC**	**CLR-1516-705B-BC**	**CLR-1517-705B-BC**	—	—

Single Acting — Metric

J X Depth of thread	M6 X 12	M10 X 15	M12 X 15	M16 X 25	M20 X 30	M27 X 40	M30 X 40	M42 X 60
Part No. Short Stroke w/ fittings	**CLR-1511-005-BC**	**CLR-1513-005-BC**	**CLR-1514-105-BC**	**CLR-1515-005-BC**	**CLR-1516-005-BC**	**CLR-1517-005-BC**	**CLR-1518-005-BC**	**CLR-1519-005-BC**
Part No. Long Stroke w/ fittings	**CLR-1511-025-BC**	**CLR-1513-025-BC**	**CLR-1514-125-BC**	**CLR-1515-025-BC**	**CLR-1516-025-BC**	**CLR-1517-035-BC**	**CLR-1518-045-BC**	**CLR-1519-045-BC**
Part No, short stroke, Manifold Mount	**CLR-1511-005B-BC**	**CLR-1513-005B-BC**	**CLR-1514-105B-BC**	**CLR-1515-005B-BC**	**CLR-1516-005B-BC**	**CLR-1517-005B-BC**	**CLR-1518-005B-BCD**	**CLR-1519-705B-BCD**

Double Acting — USA

Stroke, short	0.63	.78	1.00	1.00	1.00	1.19	1.25	1.56
Stroke, long	2.0	2.00	2.00	2.00	2.00	2.50	3.13	3.94
Fluid reqd., short (cu. In.)	.20	.57	1.25	1.95	3.05	5.74	9.81	19.17
Fluid reqd., long (cu. In.)	.62	1.52	2.50	3.90	6.10	12.08	24.54	47.93
Return piston area	.190	.448	.759	1.187	1.796	2.882	4.748	7.342
Part No. short stroke w/ fittings	**CLR-100-BCD**	**CLR-300-BCD**	**CLR-400-BCD**	**CLR-500-BCD**	**CLR-600-BCD**	**CLR-700-BCD**	—	—
Part No. long stroke w/ fittings	**CLR-160-BCD**	**CLR-360-BCD**	**CLR-460-BCD**	**CLR-560-BCD**	**CLR-660-BCD**	**CLR-770-BCD**	—	—

Double Acting — Metric

J x Depth of Thread	M6 x 12	M10 x 15	M12 x 15	M16 x 25	M20 x 30	M27 x 40	M30 x 40	M42 x 60
Part No. Short Stroke w/ fittings	**CLR-1541-105-BCD**	**CLR-1543-105-BCD**	**CLR-1544-105-BCD**	**CLR-1545-105-BCD**	**CLR-1546-105-BCD**	**CLR-1547-105-BCD**	**CLR-1548-105-BCD**	**CLR-1549-105-BCD**
Part No. Long Stroke w/ fittings	**CLR-1541-165-BCD**	**CLR-1543-165-BCD**	**CLR-1544-165-BCD**	**CLR-1545-165-BCD**	**CLR-1546-165-BCD**	**CLR-1547-175-BCD**	**CLR-1548-185-BCD**	**CLR-1549-195-BCD**

Larger sizes and strokes available (metric only).

Pull Clamps

Page 45

Hollow-Plunger Clamps

Insert stud through center hole. Quickly converts clamps straps from manual to power operation. Ideal for pulling or pushing a draw bar, and many other applications.

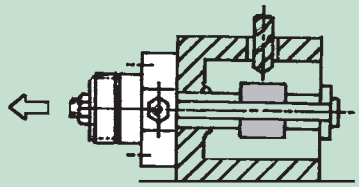

Cylindrical part, located and clamped with a center rod and C washer.

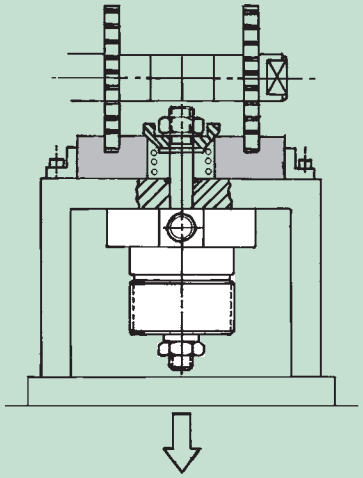

Wedge clamp, operated from below, holds two parts.

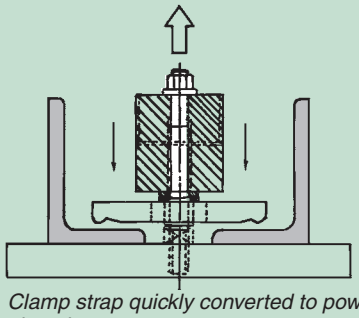

Clamp strap quickly converted to power clamping.

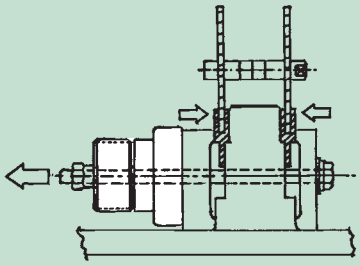

Two clamp straps squeeze parts against a central locating block.

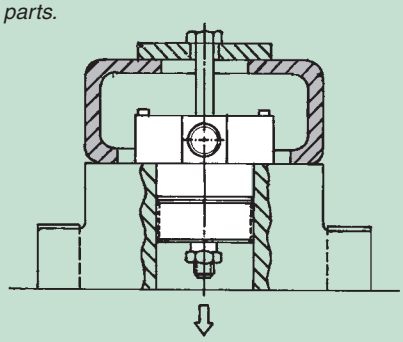

Removable C washer allows easy part loading.

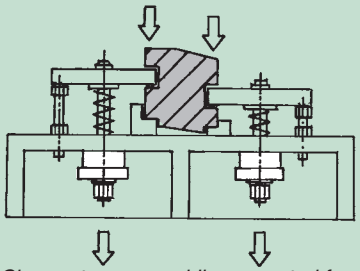

Clamp-strap assemblies operated from below to keep plumbing out of work area.

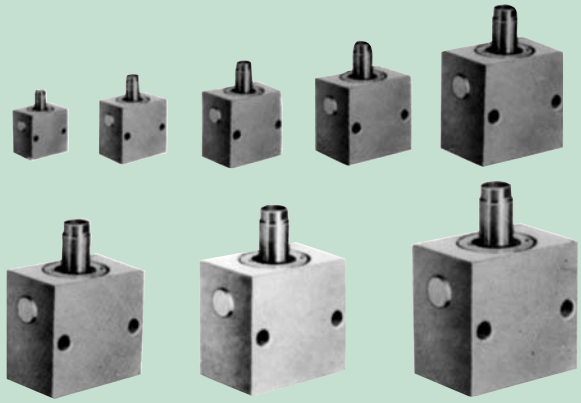

Block Pull Clamps

Easy to mount on flat surfaces. Mounts either horizontally or vertically. Plunger is tapped, not a through hole.

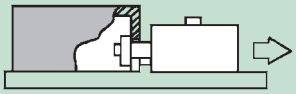

Page 46

Hollow-Plunger Clamps

7500 psi max
Single acting

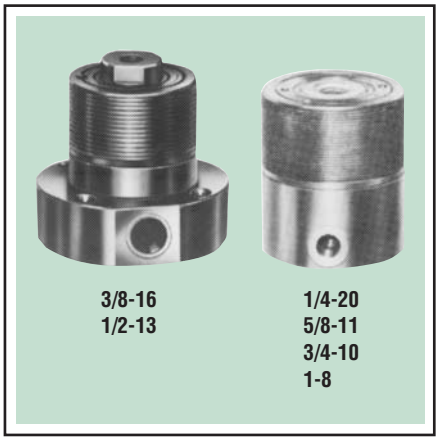

3/8-16
1/2-13

1/4-20
5/8-11
3/4-10
1-8

- **Quickly converts clamp straps from manual to power operation**
- **Accepts stud through hollow plunger**
- **May be used either to pull or to push**
- **Useful for transmitting force to a remote location via a rod**
- **Choice of six sizes**

****Do not use NPT fittings**

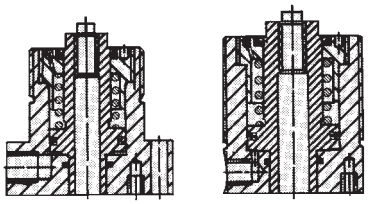

3/8-16
1/2-13

1/4-20
5/8-11
3/4-10
1-8

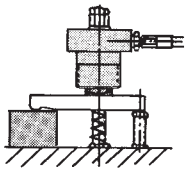

Figure 1

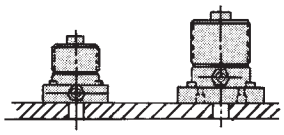

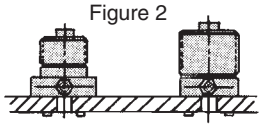

Figure 2

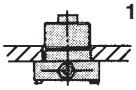

Figure 3

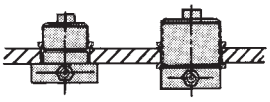

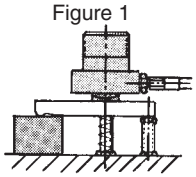

Mounting Options

CLAMPING ACTION: Fluid pressure pushes up plunger, pulling up a clamping stud inserted through center hole. Spring return.

CENTER HOLE: Choose either threaded or unthreaded center hole. Threaded version is ideal for pulling/pushing a drawbar or replacing a nut on a clamp strap. Unthreaded version is useful when clamp is removed for workpiece loading. Use a grade 8 stud or equivalent.

MOUNTING ON A CLAMP STRAP: (Figure 1) Use either threaded or unthreaded-hole clamp. Mount on center stud (longer stud usually required). Spherical washer recommended. Male 37° fluid connection. Connect via flexible hose if clamp body moves.

MOUNTING ON TOP OF FIXTURE: (Figure 2) Insert four cap screws through flange base from top and screw into fixture. (Flange must be ordered separately for 1/4, 5/8, 3/4, and 1" sizes. Four additional, socket-head cap screws required.) Alternately, insert cap screws up through fixture plate and screw into clamp from below.

MOUNTING THROUGH A HOLE IN FIXTURE: (Figure 3) Insert four cap screws through flange base from below and screw into fixture. Alternately, tighten optional locknut against fixture wall (two locknuts required for 1/4, 5/8, 3/4, and 1" sizes).

CONSTRUCTION: Steel plunger, case-hardened and ground. Body made from carbon steel.

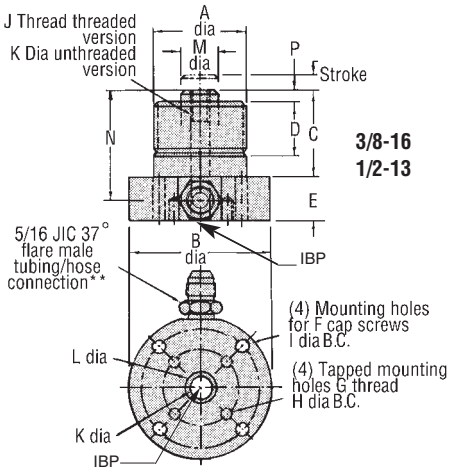

3/8-16
1/2-13

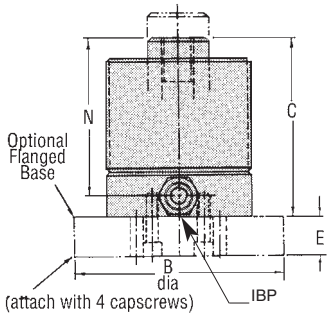

1/4-20
5/8-11
3/4-10
1-8

Clamping force (lbs)	7500 psi	2300	6900	10900	17000
	6000 psi	1800	5500	8700	13600
	5000 psi	1500	4600	7200	11300
	4000 psi	1200	3700	5800	9000
	3000 psi	900	2700	4300	6800
Center hole stud size		1/4-20	3/8-16	1/2-13	5/8-11
Stroke		.22	.31	.38	.47
Fluid reqd. (cu. in.)		.07	.30	.58	1.08
Piston area (sq. in.)		.312	.935	1.460	2.283
A dia		M40x1.5	M48x1.5	M60x1.5	M75x1.5
B dia		2.56	2.84	3.34	4.13
C		2.31	1.78	2.25	3.72
D		1.09	1.09	1.34	2.38
E		.47	.91	.91	.78
F		1-4/20	1-4/20	1-4/20	5-16/18
G		1/4	1/4	1/4	5/16
H dia		1.180	1.575	1.970	2.360
I dia		2.050	2.360	2.830	3.540
J		1/4-20x5/16	3/8-16x1/2	1/2-13x9/16	5/8-11x3/4
K dia		.26	.39	.52	.64
L dia		.47	.63	.78	1.00
M dia		.47	.78	1.00	1.25
N		1.63	2.22	2.69	3.22
P		—	.25	.28	.34
Weight (lbs)		2.0	2.4	4.0	5.5
Part No., threaded hole		**CLR-200-HC**	**CLR-400-HC**	**CLR-500-HC**	**CLR-600-HC**
Part No., unthreaded hole		**CLR-201-HC**	**CLR-401-HC**	**CLR-501-HC**	**CLR-601-HC**
Lock Ring Part No.		**CLR-99-HCA**	**CLR-24-HCA**	**CLR-11-HCA**	**CLR-73-HCA**
Flange Base Part No.		**CLR-611-HCA**	**–**	**–**	**CLR-610-HCA**

** For larger sizes and double acting versions, please consult factory.*

Block Pull Clamps

7500 psi max
Single acting

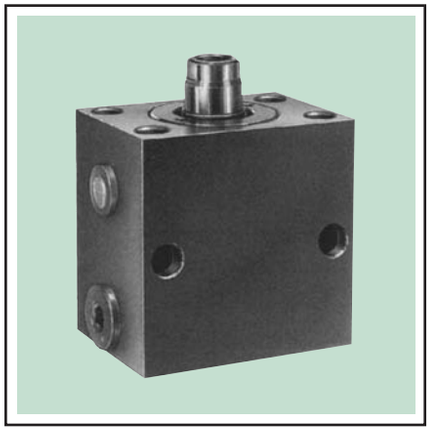

- **Easy to mount on flat surfaces**
- **New design with additional mounting holes**
- **Mount either horizontally or vertically**
- **Very high forces available**
- **Choice of eight sizes**

CLAMPING ACTION: Applying fluid pressure retracts the plunger. Spring return to extended position.

MOUNTING: Fasten with long cap screws through the block and threaded into fixture. If clamping thrust is not backed up by the fixture, a support should be provided to prevent slight screw shifting in the mounting holes. . . see example below. Support may be a rectangular strip or dowel pins (height should be at least 1/3 of B dimension).

CONSTRUCTION: Steel plunger, case hardened and ground. Body made from carbon steel, or nodular iron in larger sizes. Spring-return versions have a sintered-metal vent filter to keep out dirt. If flood coolant could enter through the vent, replace vent filter with a CLR-815-AF air-vent fitting.

OPTIONAL VITON SEALS: For high-temperature applications (up to 300°F maximum) we offer viton seals as an option in all sizes. Please contact factory for more information.

Symbol

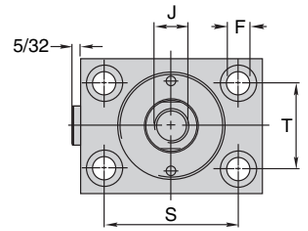

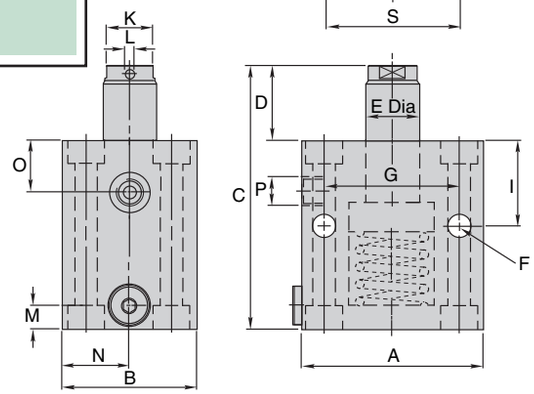

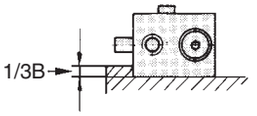

Horizontal mounting

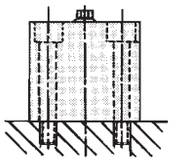

Vertical mounting

Clamping force (lbs)	7500 psi	1400	3300	5600	6400	13200	21400	35100	54400
	6000 psi	1100	2600	4500	5100	10600	17100	28100	43500
	5000 psi	900	2200	3700	4300	8800	14200	23400	36200
	4000 psi	700	1700	3000	3400	7000	11400	18700	28900
	3000 psi	500	1300	2200	2500	5200	8500	14000	21600
Stroke		.31	.31	.38	.38	.47	.47	.47	.47
Fluid required (cu.in.)		.06	.14	.30	.47	.85	1.36	2.24	3.47
Spring return force (lbs)		9	31	44	61	99	97	170	270
Piston area (sq.in.)		.187	.443	.750	1.175	1.783	2.867	4.700	7.283
Force per 1000 psi (lbs)		187	443	750	1175	1783	2867	4700	7283
Max operating pressure (psi)		7500	7500	7500	7500	7500	7500	7500	7500
A		2.38	2.56	2.97	3.34	3.94	4.94	6.31	7.88
B		1.38	1.75	2.19	2.50	2.94	3.75	4.75	5.94
C		3.06	3.56	4.31	4.75	4.94	5.75	6.44	7.31
D		.88	1.06	1.38	1.38	1.38	1.75	1.81	2.19
E dia		.39	.63	.79	.98	1.26	1.57	1.97	2.48
G		1.181	1.969	2.165	2.480	2.992	3.740	4.724	6.220
I		1.19	1.31	1.50	1.56	1.75	1.97	2.38	2.50
K		.31	.50	.63	—	—	—	—	—
L dia		—	—	—	.16	.16	.16	.19	.19
M		.44	.44	.44	.44	.50	.66	.81	1.00
N		.69	.88	1.09	1.25	1.47	1.88	2.38	2.94
O		.63	.69	.88	.94	1.06	1.19	1.56	1.56
P		1/4 BSPP	1/4 BSPP	1/4 BSPP	1/4 BSPP	1/4 BSPP	1/2 BSPP	1/2 BSPP	1/2 BSPP
S		1.575	1.969	2.165	2.48	2.992	3.74	4.724	6.22
T		.866	1.181	1.378	1.575	1.772	2.559	3.150	4.252
Weight		1.8	2.6	4.0	5.7	8.4	14.7	28.2	52.8

USA

F dia screw	1/4	5/16	3/8	3/8	1/2	—	—	—
J Thread	1/4-20x15/32	3/8-16x19/32	1/2-13x19/32	5/8-11x31/32	3/4-10x1-3/16	—	—	—
Part No. (US)	**CLR-1571-705-BC**	**CLR-1573-705-BC**	**CLR-1574-705-BC**	**CLR-1575-705-BC**	**CLR-1576-705-BC**	—	—	—

Metric

F dia screw	M6	M8	M10	M10	M12	M16	M20	M24
J Thread	M6x12	M10x15	M12x15	M16x25	M20x25	M27x40	M30x40	M42x60
Part No. (Metric)	**CLR-1571-105-BC**	**CLR-1573-105-BC**	**CLR-1574-105-BC**	**CLR-1575-105-BC**	**CLR-1576-105-BC**	**CLR-1577-105-BC**	**CLR-1578-105-BC**	**CLR-1579-105-BC**

SWIFTSURE®

CARR LANE ROEMHELD MFG. CO.

Sales—Phone (314) 647-6200 Fax (314) 647-5736
Engineering—Phone 1-800-827-2526 Fax (636) 386-8034

Work Supports

7500 psi max
Single and double acting

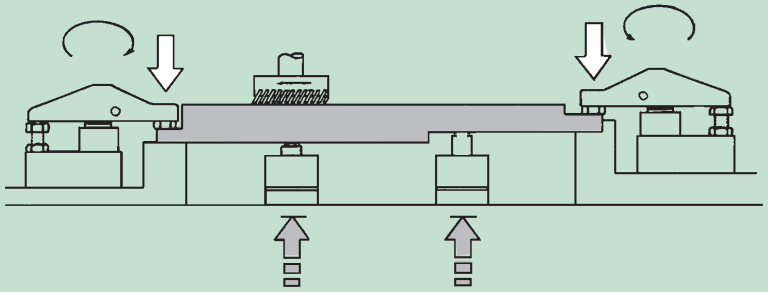

Automatically adjusts to proper height for supporting workpiece. Prevents deflection and vibration due to machining forces. May also be used underneath clamps to back up clamping force. More accurate, more consistent, and much faster than screw jacks.

Precision sleeve around support plunger holds it absolutely vertical while unlocked, then locks it securely when fluid pressure is applied. Plunger remains perfectly stationary during locking. Far better accuracy and repeatability than earlier segmented-collet or sandwiched-plate work supports. Choice of three actions:

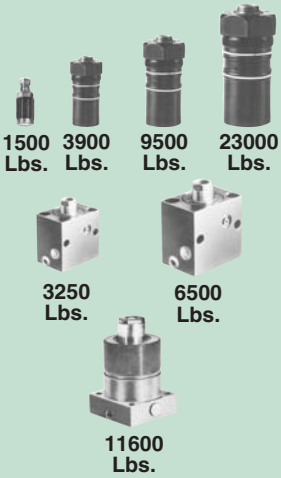

Threaded Body
pages 48-52

Block Type
page 55

Standard
page 56

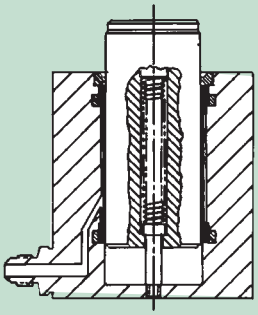

Spring Extended
(Plunger floats then locks)

Plunger is normally extended by light spring force. Workpiece's weight depresses plunger to proper height. Applying fluid pressure locks plunger securely.

Threaded Body
pages 48-52

Standard
pages 53-54, 56

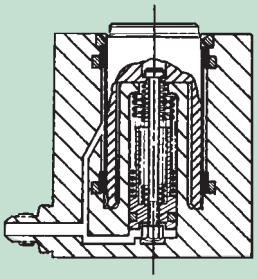

Fluid Advanced
(Plunger advances then locks)

Plunger is normally retracted for clear loading/unloading. Applying fluid pressure gently advances plunger to the workpiece, then automatically locks it. Note: do not use advancing plunger to lift loads.

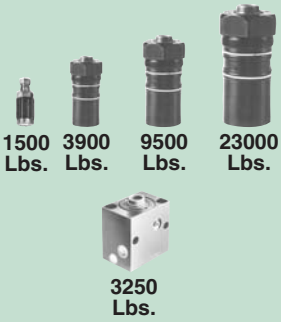

Threaded Body
pages 48-52

Block Type
page 55

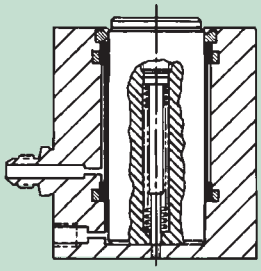

Air Advanced/Extended
(Plunger floats or advances by air pressure)

Plunger is normally retracted for clear loading/unloading. Applying air pressure advances plunger to the workpiece. This allows fine tuning contact pressure using a simple air regulator. Contact force may be as light as a few ounces. Applying fluid pressure locks plunger securely.

CARR LANE ROEMHELD MFG. CO.
Sales—Phone (314) 647-6200 Fax (314) 647-5736
Engineering—Phone 1-800-827-2526 Fax (636) 386-8034

Threaded-Body Work Supports

7500 psi max
Single Acting

Spring Extended

Fluid Advanced

Air Advanced

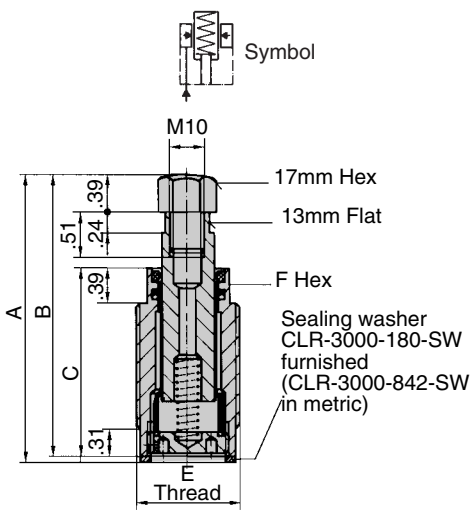

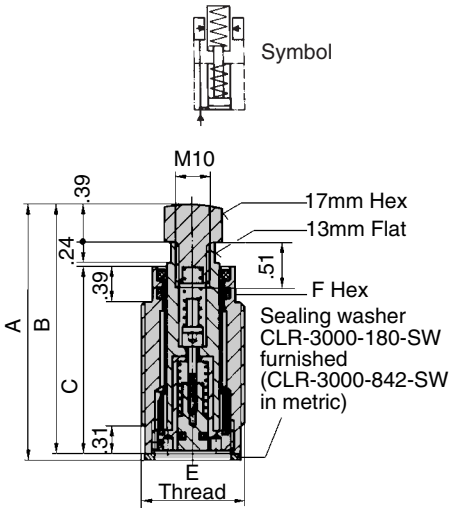

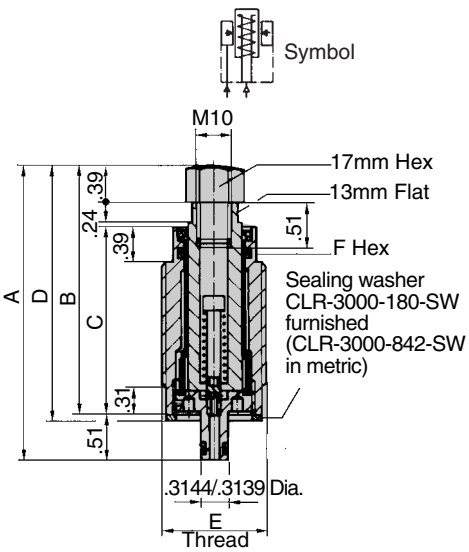

Load Capacity at 7500 psi	1500 Lbs				2200 Lbs			
Plunger action	Spring Extended	Fluid Advanced		Air Advanced	Spring Extended	Fluid Advanced		Air Advanced
Stroke	.31	.31	.59	.31	.31	.31	.59	.31
Max. load capacity (lbs)	1500	1500	1500	1500	2200	2200	2200	2200
Fluid required (cu.in)	.01	.10	.10	.01	.01	.10	.18	.01
Max. fluid flow rate (cu.in./min.)	—	100	100	—	—	100	100	—
Contact force, min/max (lbs)	1.8 to 3.0	2.2 to 5.2	2.2 to 5.2	See text	1.8 to 3.0	2.2 to 5.2	2.2 to 5.2	See text
Max. operating pressure (psi)	7500	7500	7500	7500	7500	7500	7500	7500
Min. operating pressure (psi)	1500	1500	1500	1500	1500	1500	1500	1500
A	3.17	2.85	3.13	3.31	3.56	3.25	3.52	3.70
B	3.11	2.80	3.07	2.80	3.50	3.19	3.46	3.19
C	2.13	2.13	2.40	2.13	2.52	2.52	2.80	2.52
D	—	—	—	2.85	—	—	—	3.25
Weight (lbs)	.6	.6	.6	.6	.6	.6	.6	.6

USA

E Thread	1-1/4-16	1-1/4-16	—	1-1/4-16	—	—	—	—
F Hex	1.06	1.06	—	1.06	—	—	—	—
Part. No., Work Support only	**CLR-001-WS**	**CLR-201-WS**	—	**CLR-101-WS**	—	—	—	—
Part No., Base only	**CLR-712-WSA**	**CLR-712-WSA**	—	**CLR-711-WSA**	—	—	—	—
Part No., Work Support with Base	**CLR-000-WS**	**CLR-200-WS**	—	**CLR-100-WS**	—	—	—	—

METRIC

E Thread	M30x1.5	M30x1.5	M30x1.5	M30x1.5	M30x1.5	M30x1.5	M30x1.5	M30x1.5
F Hex	24mm	24mm	24mm	24mm	24mm	24mm	24mm	24mm
Part. No., Work Support only	**CLR-1940-000-WS**	**CLR-1942-000-WS**	**CLR-1942-005-WS**	**CLR-1941-000-WS**	**CLR-1940-010-WS**	**CLR-1942-010-WS**	**CLR-1942-015-WS**	**CLR-1941-010-WS**

Threaded-Body Work Supports

7500 psi max
Single acting

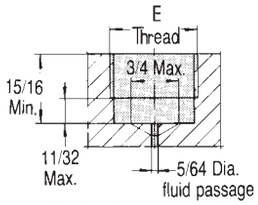

Hole Preparation (Spring Extended and Fluid Advanced)

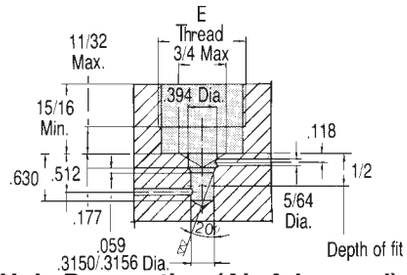

Hole Preparation (Air Advanced)

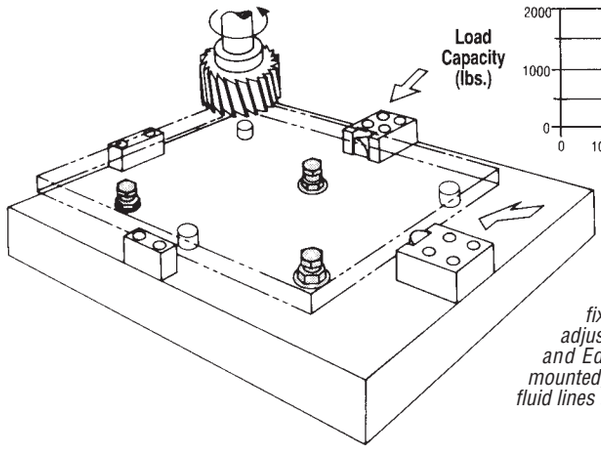

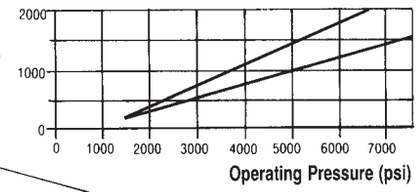

Example:
Workpiece supported by three fixed rest buttons and three self-adjusting Work Supports. Supports and Edge Clamps are all manifold mounted, so the fixture has no exposed fluid lines to trap chips.

OPTIONAL BASE

Spring-Extended Work Support with Base CLR-000-WS

Fluid-Advanced Work Support with Base CLR-200-WS

Air-Advanced Work Support with Base CLR-100-WS

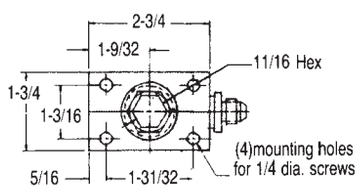

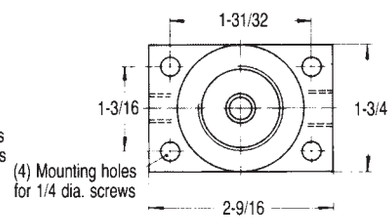

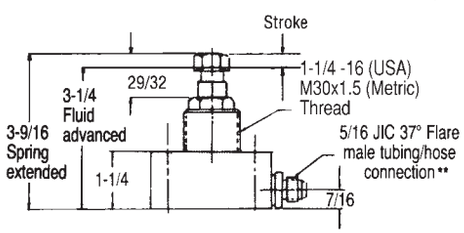

Base Only
CLR-712-WSA
CLR-512-WSA (METRIC)

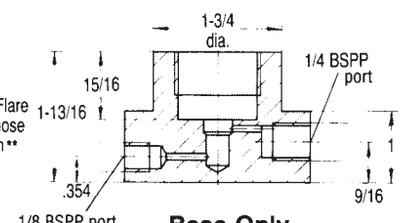

Base Only
CLR-711-WSA
CLR-3467-112-WSA (METRIC)

- **Amazingly compact threaded body work support…only 1-1/4 inches in diameter!**
- **Height adjusts automatically with repeatability with ± .0002 inches**
- **Choice of two sizes in each of three action types, plus a long-stroke fluid-advanced model (1700 lbs)**
- **Support plunger held by an advanced design, sliding-fit pressure sleeve (holds plunger absolutely vertical, locked or unlocked)**

SUPPORT ACTION (SPRING EXTENDED): Plunger is normally extended by light spring force. Workpiece's weight depresses plunger to proper height. When fluid pressure is applied, precision sleeve grips plunger, locking it securely.

SUPPORT ACTION (FLUID ADVANCED): Plunger is normally retracted for clear workpiece loading/unloading. Applying fluid pressure gently advances plunger to workpiece, where it contacts with light spring force. When fluid pressure is applied, precision sleeve grips plunger, locking it securely. Plunger retracts again when pressure is released.

SUPPORT ACTION (AIR ADVANCED): Plunger is normally retracted for clear workpiece loading/unloading. Applying air pressure gently advances plunger to workpiece. A simple 3-way air valve, fine pressure regulator (p.118), and air dryer (p.118) are required. Fine tune contact pressure using regulator. When fluid pressure is applied, precision sleeve grips plunger, locking it securely. Plunger retracts again when air pressure is released. Air-advanced version is also available without spring return for extremely sensitive contact-force adjustment (part no CLR-7990-284-WS without base, CLR-110-WS with base).

ACCURACY: Height repeatability ± .0002 inches. Excellent repeatability because (1) sliding fit sleeve keeps plunger absolutely vertical while unlocked, avoiding inacurracy due to locking a tilted plunger, and (2) locking force is entirely radial, so plunger stays absolutely stationary during locking. Elastic deflection of plunger is only .00016 inches per 100 lbs. machining load.

MOUNTING: Screw work support into a tapped hole prepared as shown below. Hole bottom must be perpendicular to the hole's axis. with a 125 RMS maximum surface finish. Minimum seating torque 50 ft.-lbs. Supply fluid through passages drilled in the fixture.

SEQUENCING: If workpiece is too light to depress plunger (spring extended) or light enough that plunger contact may lift it (fluid advanced), a sequence valve is recommended (page 91). Sequence valve delays locking or advancing the plunger until after the workplace is clamped.

CONSTRUCTION: Steel plunger, hardened and ground. Plunger held inside a honed locking sleeve (sliding fit). Carbon steel body, black oxide finish. Hardened contact bolt furnished.

CARR LANE ROEMHELD MFG. CO.
Sales—Phone (314) 647-6200 Fax (314) 647-5736
Engineering—Phone 1-800-827-2526 Fax (636) 386-8034

Threaded-Body Work Supports

7500 psi max
Single acting

Spring Extended
Fluid Advanced
Air Advanced

- **Space-saving threaded-body version**
- **3 types of operation**
- **Contact force pneumatically adjustable**
- **Load up to 3300 Lbs**
- **Bleeding for spring area connectable**
- **FKM wiper**
- **Metallic wiper**
- **Mounting body as accessory**

Application Example

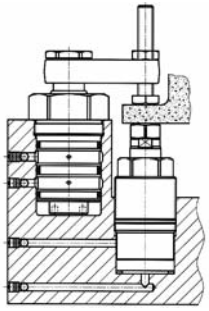

DESCRIPTION: Hydraulic work supports are used to provide a self-adjusting rest for the workpiece during machining operations. They compensate for surface irregularities and resist vibration and deflection under machining loads. The space saving design of the threaded-body version allows direct installation into the plate. Hydraulic oil supply is made through drilled channels.

The locking mechanism is a thin-walled bushing surrounding the plunger. When pressurized, this sleeve collapses around the plunger to provide solid radial force upon the plunger.

The elements are protected against penetration of chips and coolant by a metallic wiper. The venting port can also be used for check air. A mounting body for tube connection is available as accessory.

IMPORTANT NOTES: If there is any danger of fluids being sucked into the bleed area, a vent hose has to be connected at the vent channel opening and routed to a dry area. When using special contact bolts the screw-in depth must be kept at .47 in.

The admissible load chart is shown on the following page and is measured in static conditions. Machining forces can generate vibrations, which can amplify the average value, and this can possibly cause slipping of the support plunger. A solution would be to increase the safety factor or the number or work supports.

Spring Extended

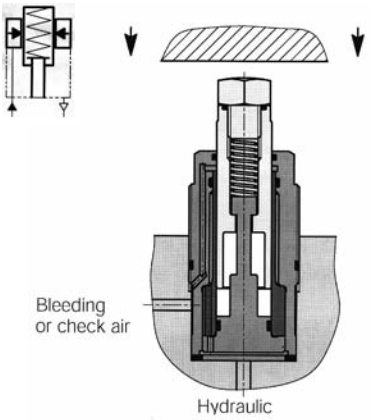

CLR-1940-200-WS

Off-position:
Plunger extended
Contact with spring force

The support plunger is pushed back by the inserted workpiece, the spring force is overcome.

The support plunger is locked by hydraulic pressure and resists machining forces in axis direction.

After unclamping the support plunger remains in contact with the workpiece with spring force, until the workpiece is unloaded from the fixture.

Fluid Advanced

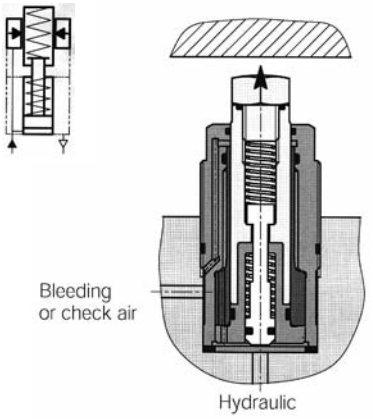

CLR-1942-200-WS

Off-position:
Plunger retracted
Extend with hydraulic pressure
Contact with spring force

The support plunger is extended by a hydraulically operated piston and contacts the workpiece with spring pressure.

The support plunger is locked by the increasing hydraulic pressure and resists machining forces in axis direction.

For unclamping, hydraulic pressure is released. The small piston retracts by spring force to its off-position and also retracts the support plunger.

Air Advanced

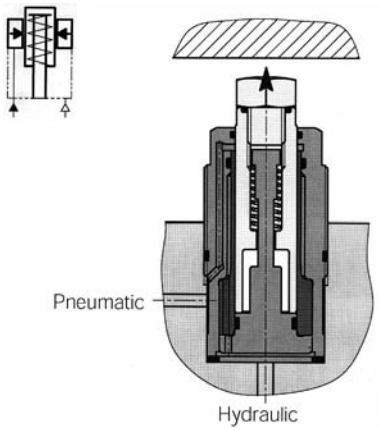

CLR-1941-200-WS

Off-position:
Plunger retracted
Extended and contact with air pressure

The support plunger contacts the workpiece by air pressure. The contact force is proportional to the input air pressure minus the spring return force.

The support plunger is locked by hydraulic pressure and resists machining forces in axis direction.

For unclamping, hydraulic and air pressure are released and the support plunger retracts by spring force to its off-position.

Threaded-Body Work Supports

7500 psi max
Single acting

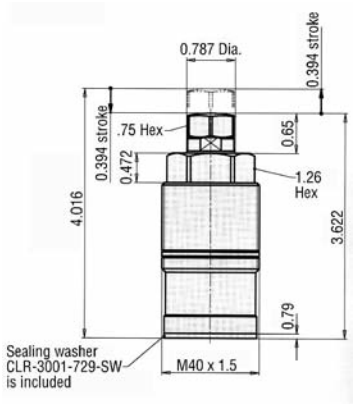

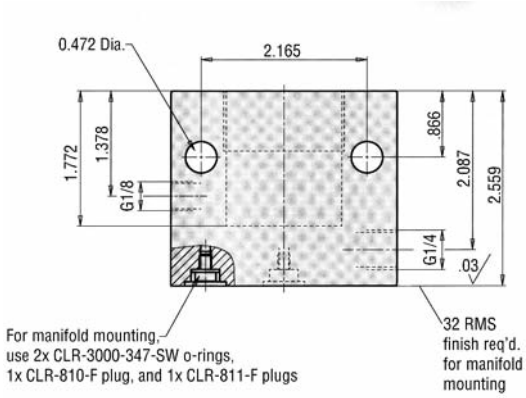

Admissible Load F as a function of the operating pressure p

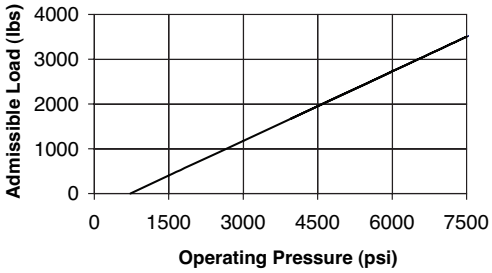

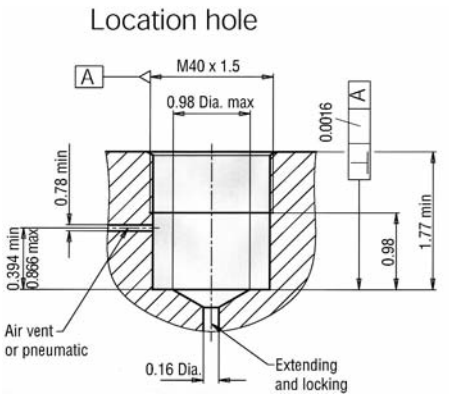

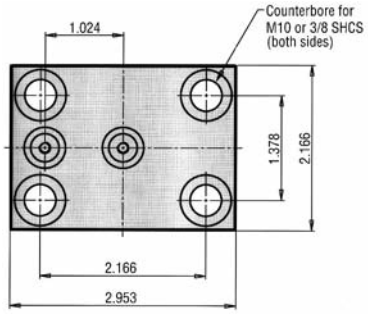

Variation in Length of the Support Plunger During Load

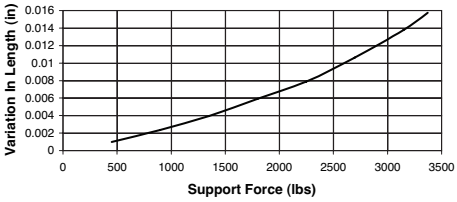

Installation Options

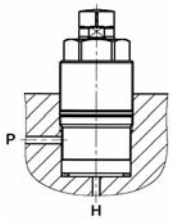

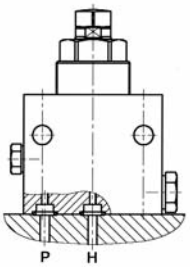

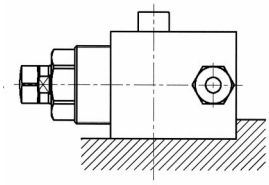

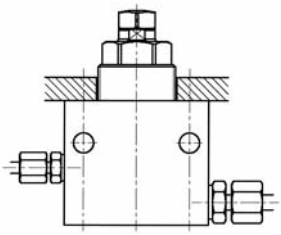

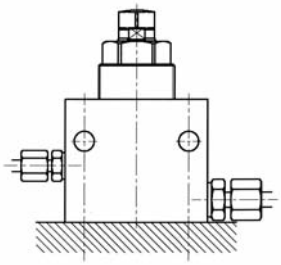

Load capacity at 7500 psi	3300 Lbs	3300 Lbs	3300 Lbs
Plunger action	Spring extended	Fluid advanced	Air advanced
Stroke	0.39	0.39	0.39
Max. load capacity (lbs.)	3300	3300	3300
Max. fluid required (cu. in.)	0.06	0.06	0.06
Max. flow rate (cu. In./min.)	—	91	—
Spring contact force, min./max. (lbs.)	4.1 / 7.2	4.1 / 7.2	1 per 2 psi (over spring)
Max. operating psi	7500	7500	7500
Min. operating psi	1450	1450	1450
Seating torque (foot pounds)	74	74	74
Weight (lbs.)	1.3	1.3	1.3
Part No., Work support	**CLR-1940-200-WS**	**CLR-1942-200-WS**	**CLR-1941-200-WS**
Part No., Mounting block	**CLR-0346-801-WSA**	**CLR-0346-801-WSA**	**CLR-0346-801-WSA**
Part No., Sealing washer	**CLR-3001-729-SW**	**CLR-3001-729-SW**	**CLR-3001-729-SW**

CARR LANE ROEMHELD MFG. CO.
Sales—Phone (314) 647-6200 Fax (314) 647-5736
Engineering—Phone 1-800-827-2526 Fax (636) 386-8034

Threaded-Body Work Supports

7500 psi max
Single acting

Spring Extended
Fluid Advanced
Air Advanced

- **State-of-the-art compact work supports with high load capacities**
- **Manifold mounting provides space-saving low-height installation**
- **Support plunger held by an advanced-design sliding-fit pressure sleeve (holds plunger absolutely vertical, locked or unlocked)**
- **Height adjusts automatically, with ±.0002 inches repeatability**
- **Choice of three sizes**

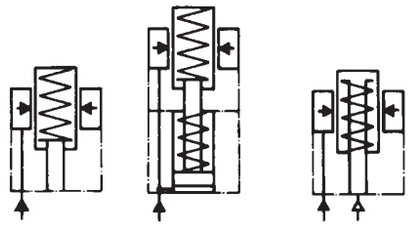

Spring Extended **Fluid Advanced** **Air Advanced**

SUPPORT ACTION: (Spring extended) Plunger is normally extended by light spring force. Workpiece's weight depresses plunger to proper height. When fluid pressure is applied, precision sleeve grips plunger, locking it securely.

SUPPORT ACTION: (Fluid advanced) Plunger is normally retracted for clear workpiece loading/unloading. Applying fluid pressure gently advances plunger to workpiece, where it contacts with light spring force. When fluid pressure is applied, precision sleeve grips plunger, locking it securely. Plunger retracts again when pressure is released.

SUPPORT ACTION: (Air advanced) Plunger is normally retracted for clear workpiece loading/unloading, applying air pressure gently advances plunger to workpiece. When air pressure is applied, precision sleeve grips plunger, locking it securely. Plunger retracts again when air pressure is released.

ACCURACY: Height repeatability ±.0002 inches. Excellent repeatability because (1) sliding fit sleeve keeps plunger absolutely vertical while unlocked, avoiding inaccuracy due to locking a tilted plunger, and (2) locking force is entirely radial, so plunger stays absolutely stationary during locking. Elastic deflection of plunger is only .00016 inches per 100 LBS. machining load.

CONSTRUCTION: Steel plunger, hardened and ground. Plunger held inside a honed locking sleeve (sliding fit). Carbon steel body, black oxide finish.

Applications with Swing Clamps

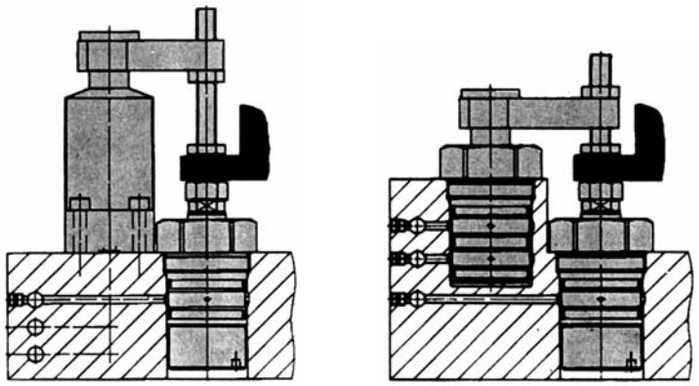

Threaded-body work supports are properly sized to match the three basic swing-clamp sizes. When supporting underneath a clamp, load capacity should be at least two times the clamping force. This allows the support to resist not only static clamping force, but also dynamic force due to clamping-arm momentum, and machining forces.

2900 Lbs Capacity

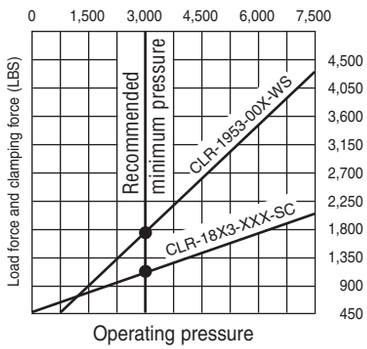

7200 Lbs Capacity

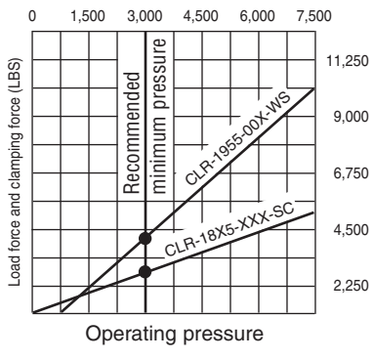

18000 Lbs Capacity

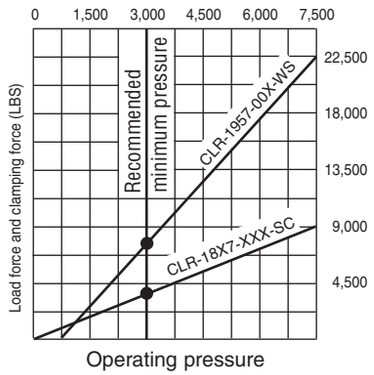

SWIFTSURE®

CARR LANE ROEMHELD MFG. CO.

Sales—Phone (314) 647-6200 Fax (314) 647-5736
Engineering—Phone 1-800-827-2526 Fax (636) 386-8034

Threaded-Body Work Supports

7500 psi max
Single acting

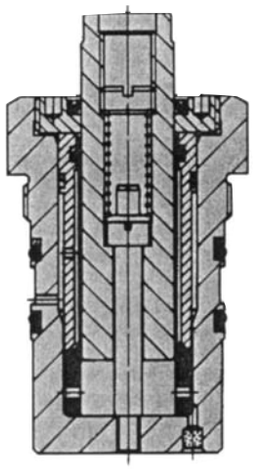

Spring Extended

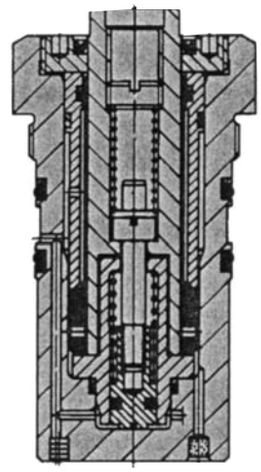

Fluid Advanced

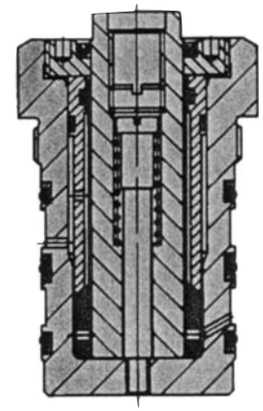

Air Advanced

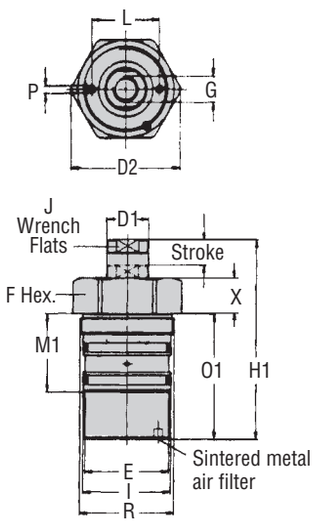

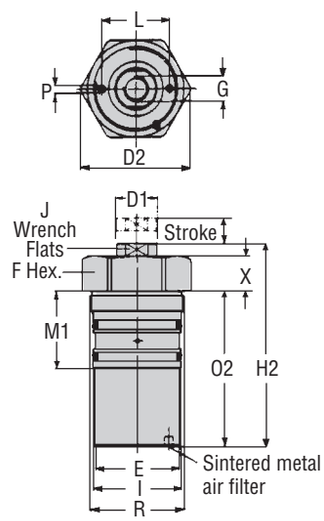

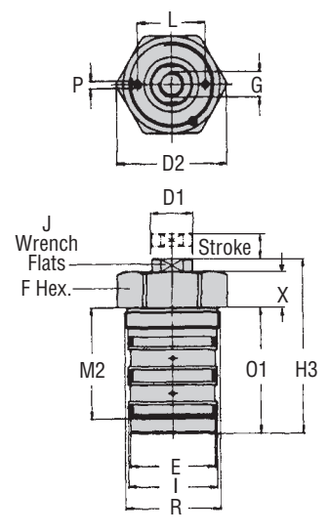

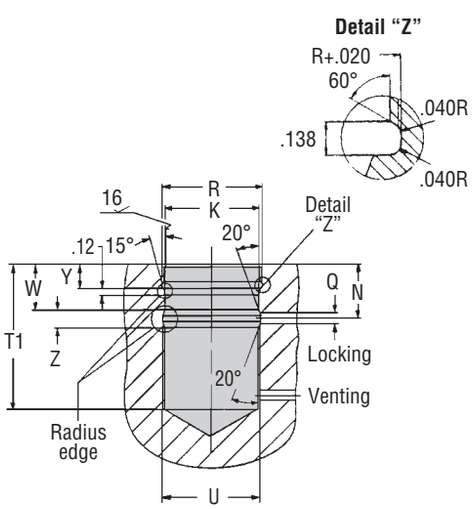

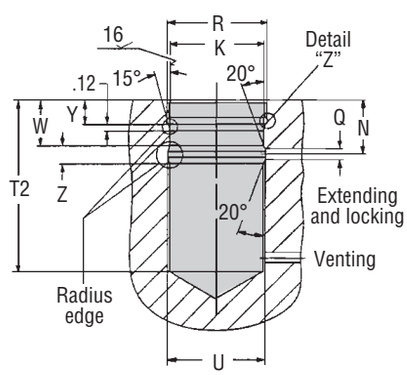

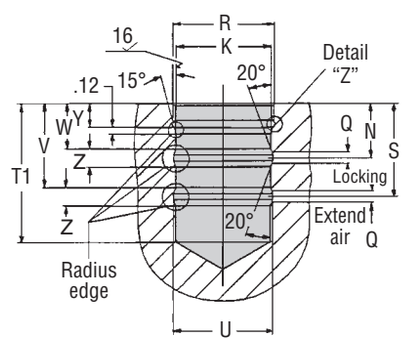

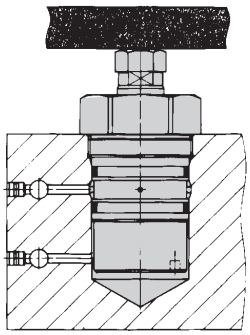

Unique manifold-mounted design allows an extremely low installed height.

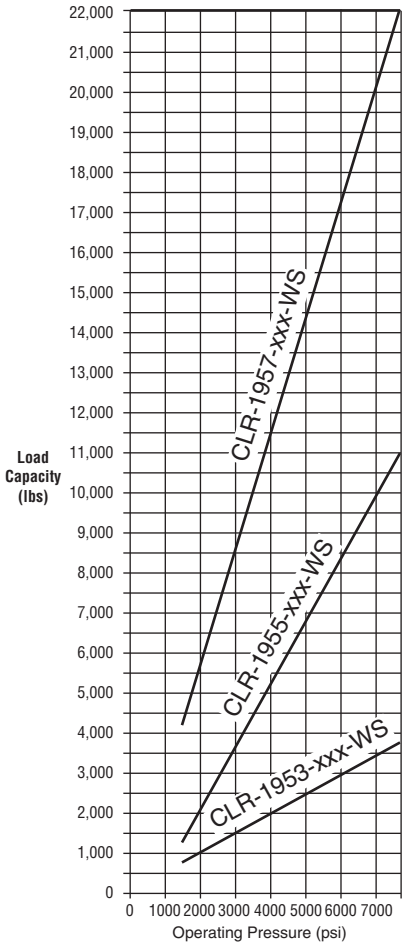

Load capacity at 7500 psi	3900 Lbs	9500 Lbs	23000 Lbs
Support plunger-Dia D1	.78	1.25	1.97
Stroke	.47	.63	.78
Plunger contact force min./max. (lbs)	3.4/5.6	6.8/13.5	11.3/22.5
Max oil flow (cu. in./min.)	91	128	366
Reqd. oil per stroke (cu. in.)	.06	.20	.60
Contact force per psi air pressure (lbs)	.48	1.24	3.04
D2 Dia	2.06	2.50	3.94
E Dia	1.63	2.09	3.27
F	1.81	2.16	3.75
H1	3.75	4.69	6.88
H2	3.88	4.72	6.78
H3	3.25	4.06	6.06
I Dia	1.65	2.17	3.35
J	.67	1.06	1.61
K Dia	1.6535/1.6545	2.1654/2.1665	3.3465/3.3478
L	—	—	3.38
M1	1.41	1.75	2.38
M2	2.09	2.53	3.34
N	.94	1.13	1.63
01 (Spring/Air)	2.38	2.59	4.97
02 (Fluid)	2.97	3.28	5.66
P Dia/Deep	—	—	5/16x3/8
Q Dia Max	.19	.19	.25
S	1.614	1.831	2.520
T1 (Spring/Air)	2.41	2.63	5.00
T2 (Fluid)	3.00	3.31	5.72
U Dia	1.75	2.25	3.44
V	1.457	1.634	2.323
W	.78	.94	1.44
X	.66	1.31	.78
Y	.41	.50	.81
Z	.31	.38	.38

USA

G x depth of thread	1/2-13 x 1/2	1/2-13 x 1/2	5/8 -11 x 5/8
R	1-3/4 - 16	2-3/8 - 16	3-5/8 - 16
Part No., Spring Extended	**CLR-1953-700-WS**	**CLR-1955-700-WS**	**CLR-1957-700-WS**
Part No., Fluid Advanced	**CLR-1953-702-WS**	**CLR-1955-712-WS**	**CLR-1957-702-WS**
Part No., Air Advanced	**CLR-1953-701-WS**	**CLR-1955-701-WS**	**CLR-1957-701-WS**

METRIC

G x depth of thread	M12 X 12	M12 X 12	M16 X 20
R	M45 X 1.5	M60 X 1.5	M90 X 2
Part No., Spring Extended	**CLR-1953-000-WS**	**CLR-1955-000-WS**	**CLR-1957-000-WS**
Part No., Fluid Advanced	**CLR-1953-002-WS**	**CLR-1955-012-WS**	**CLR-1957-002-WS**
Part No., Air Advanced	**CLR-1953-001-WS**	**CLR-1955-001-WS**	**CLR-1957-001-WS**

Work Supports

7500 psi max
Single acting

Fluid Advanced

- **Low profile**
- **Height adjusts automatically**
- **Support plunger held by an advanced design sliding-fit pressure sleeve**
- **Sleeve holds plunger absolutely vertical, locked or unlocked**
- **Height repeatability within +.0002 inches**

****Do not use NPT fittings**

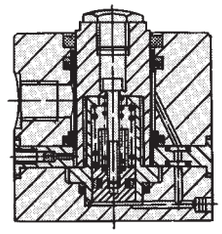

SUPPORT ACTION (FLUID ADVANCED): Plunger is normally retracted for clear workpiece loading/unloading. Applying fluid pressure gently advances plunger to workpiece, where it contacts with light spring force. When fluid pressure rises above 750 psi, precision sleeve grips plunger, locking it securely. Plunger retracts again when pressure is released.

ACCURACY: Height repeatability +.0002 inches. Excellent repeatability because: (1) sliding-fit sleeve keeps plunger absolutely vertical while unlocked avoiding inaccuracy due to locking a tilted plunger, and (2) locking force is entirely radial, so plunger stays absolutely stationary during locking. Elastic deflection of plunger is only .00007 inches per 100 lbs. machining load.

MOUNTING: Fasten with two socket-head cap screws. G1/4 Port.

CONTACT FORCE: 3 lbs. fully extended, 7 lbs. fully depressed.

SEQUENCING: If workpiece is light enough that plunger contact may lift it, a sequence valve is recommended (page 91). Sequence valve delays advancing the plunger until after the workpiece is clamped.

CONSTRUCTiON: Steel plunger, hardened and ground. Plunger held inside a honed locking sleeve (sliding fit). Carbon steel body, black oxide finish. Hardened contact bolt furnished.

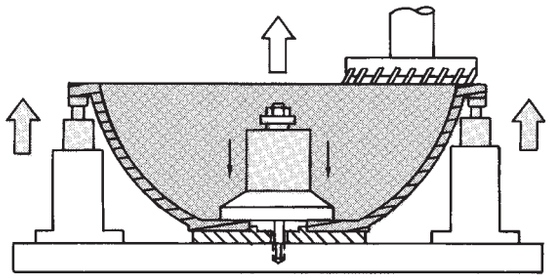

Example:

Bell housing clamped by a Hollow Plunger Clamp with Work Supports around its perimeter for a milling operation.

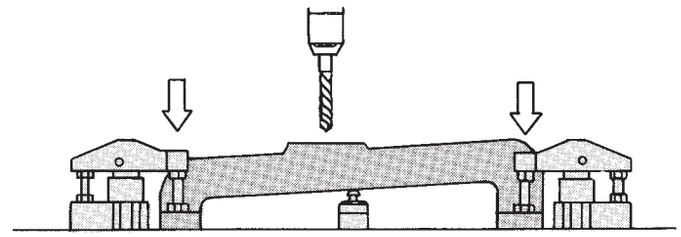

Example:

Workpiece supported at its center for drilling.

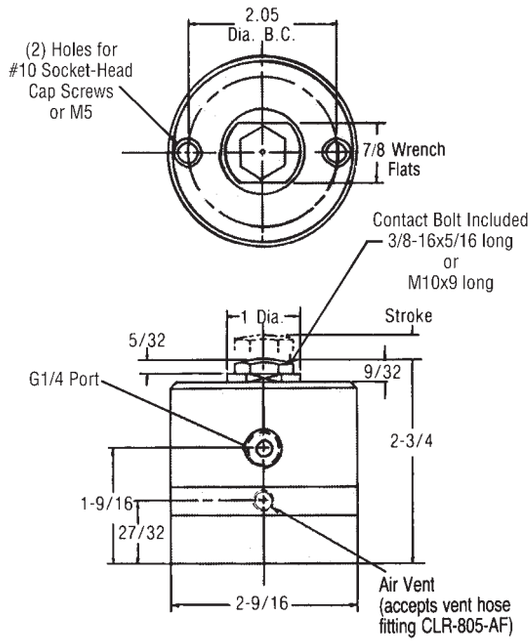

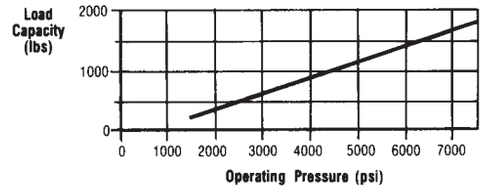

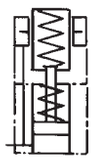

Symbol

Load Capacity at 7500 psi	1860 Lbs
Plunger action	Fluid advanced
Max load capacity (lbs)	1800
Stroke	.31
Fluid required	.08
Max. fluid flow rate (cu.in./min.)	130
Contact force, min./max (lbs)	3 / 7
Max. operating pressure (psi)	7500
Min. operating pressure (psi)	1500
Weight (lbs)	2.0
Part No. (USA)	**CLR-300-WS**
Part No. (Metric)	**CLR-1913-010-WS**

CARR LANE ROEMHELD MFG. CO.
Sales—Phone (314) 647-6200 Fax (314) 647-5736
Engineering—Phone 1-800-827-2526 Fax (636) 386-8034

Work Supports

7500 psi max
Single acting

Fluid Advanced

- **High capacity in a compact shape**
- **Versatile mounting . . . side port, bottom port, or manifold mounting**
- **Support plunger held by an advanced design sliding-fit pressure sleeve**
- **Sleeve holds plunger absolutely vertical, locked or unlocked**
- **Height repeatability within +.0002 inches!**

****Do not use NPT fittings**

Symbol

SUPPORT ACTION (FLUID ADVANCED): Plunger is normally retracted for clear workpiece loading/unloading. Applying fluid pressure gently advances plunger to workpiece, where it contacts with light spring force. When fluid pressure rises above 1500 psi, precision sleeve grips plunger, locking it securely. Plunger retracts again when pressure is released.

ACCURACY: Height repeatability ±.0002 inches. Excellent repeatability because: (1) sliding-fit sleeve keeps plunger absolutely vertical while unlocked, avoiding inaccuracy due to locking a tilted plunger; and (2) locking force is entirely radial, so plunger stays absolutely stationary during locking. Elastic deflection of plunger is only .00007 inches per 100 lbs. machining load.

MOUNTING: See mounting options at left. Fasten with two socket-head cap screws, or with one or two lockrings. When embedding in a bored hole, hole diameter must be at least 3-1/4 inches to allow clearance for a CLR-810-F port plug on the side.

CONSTRUCTION: Steel plunger hardened and ground. Plunger held inside a honed locking sleeve (sliding fit). Carbon steel body, black oxide finish.

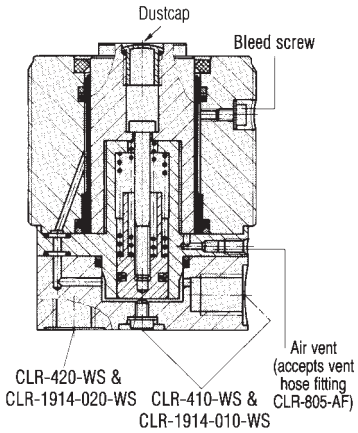

Mounting Options

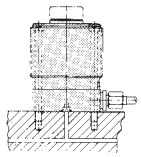

Surface mounting with two cap screws

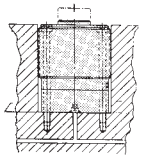

Embedded in bored hole with two cap screws

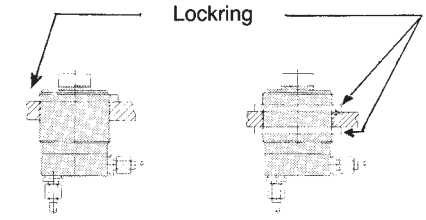

Tapped hole with one lockring

Bored hole with two lockrings

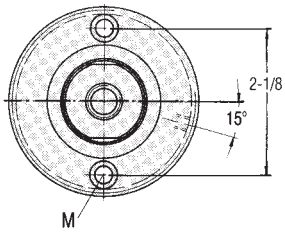

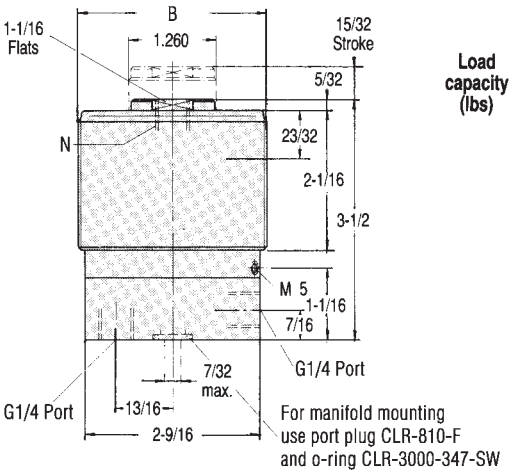

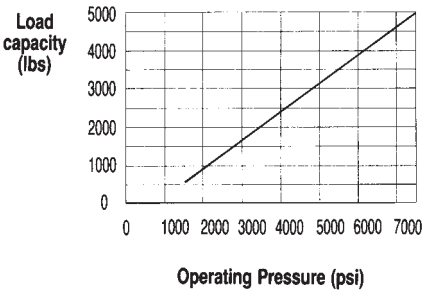

Load Capacity at 7500 psi	4650 Lbs
Plunger action	Fluid advanced
Max. load capacity (lbs)	4650
Stroke	.47
Fluid required (cu.in)	.15
Max. fluid flow rate (cu.in./min.)	128
Contact force, min./max. (lbs)	7/14
Max. operating pressure (psi)	7500
Min. operating pressure (psi)	1500
Weight (lbs)	4.4

USA

N Plunger Thread	1/2-13 x 1/2 Deep
B Body Thread	2-3/4 - 16
M Mounting Screw Size	1/4 in.
Part No., Side Port or Manifold Mount	**CLR-410-WS**
Part No., Bottom Port	**CLR-420-WS**
Part No., Lockring	**CLR-400-WSA**

METRIC

N Plunger Thread	M12 x 12 Deep
B Body Thread	M68 x 2
M Mounting Screw Size	M6
Part No., Side Port or Manifold Mount	**CLR-1914-010-WS**
Part No., Bottom Port	**CLR-1914-020-WS**
Part No., Lockring	**CLR-3522-008-WSA**

SWIFTSURE®

CARR LANE ROEMHELD MFG. CO.

Sales—Phone (314) 647-6200 Fax (314) 647-5736
Engineering—Phone 1-800-827-2526 Fax (636) 386-8034

Work Supports

7500 psi max
Single acting

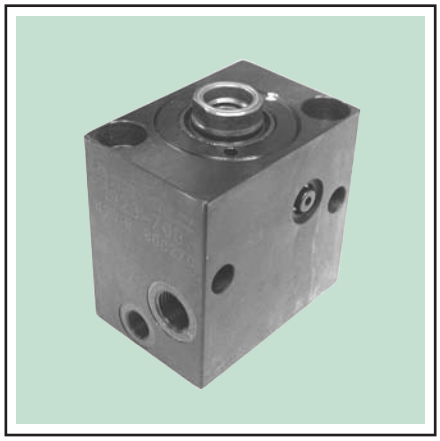

Block Style
Spring Extended or Air Advanced

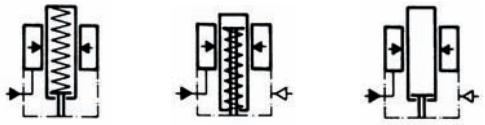

Spring Extended | **Air Advanced Spring Return** | **Air Advanced No Spring**

- **Easy to mount, vertically or horizontally (manifold mounting optional)**
- **Height adjusts automatically**
- **Support plunger held by an advanced-design sliding-fit pressure sleeve**
- **Sleeve holds plunger absolutely vertical, locked or unlocked**
- **Height repeatability within ± .0002 inches!**
- **Choice of three sizes and three types**

****Do not use NPT fittings**

Admissible load F as a function of the operating pressure p

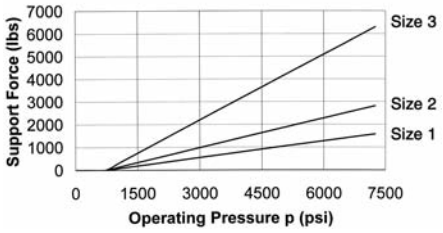

SUPPORT ACTION (SPRING EXTENDED): Plunger is normally extended by light spring force. Workpiece's weight depresses plunger to proper height. When fluid pressure is applied, precision sleeve grips plunger, locking it securely.

SUPPORT ACTION (AIR ADVANCED): Plunger is normally retracted for clear workpiece loading/unloading. Applying air pressure gently advances plunger to workpiece. A simple 3-way air valve, fine pressure regulator (p. 118), and air dryer (p. 118) are required. Fine tune contact pressure using regulator. When fluid pressure is applied, precision sleeve grips plunger, locking it securely. Plunger retracts again when air pressure is released.

ACCURACY: Height repeatability ±.0002 inches. Excellent repeatability because of (1) sliding-fit sleeve keeps plunger absolutely vertical while unlocked, avoiding inaccuracy due to locking a tilted plunger; and (2) locking force is entirely radial, so plunger stays absolutely stationary during locking. Elastic deflection of plunger is only .00004 inches per 100 lbs machining load.

SEQUENCING: If workpiece is too light to depress plunger (spring extended) or light enough that plunger contact may lift it (air advanced), a sequence valve is recommended (page 92). Sequence valve delays locking or advancing the plunger until after the workpiece is clamped.

CONSTRUCTION: Steel plunger, hardened and ground. Plunger held inside a honed locking sleeve (sliding fit). Carbon steel body, black oxide finish. Plunger accepts contact bolts (page 128) or extensions.

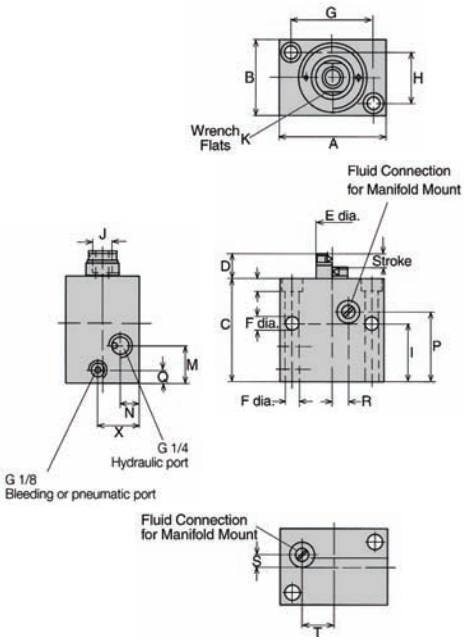

Support Force at 7500 psi	1600 lbs	2900 lbs	6500 lbs
Size	1	2	3
Stroke	.23	.31	.39
Spring Contact Force (min./max.)Lbs	1.8 / 2.25	3.0 / 3.8	4.3 / 5.4
Contact force per 10 psi (minus spring force)	3.1 lbs	4.9 lbs	14.9 lbs
Min. Operating Pressure (psi)	1450	1450	1450
A	2.36	2.56	3.35
B	1.38	1.77	2.48
C	2.21	2.52	3.11
D	.47	.59	.79
E dia.	.63	.79	1.38
F dia. Screw	.256	.335	.413
G	1.57	1.97	2.48
H	.866	1.181	1.575
I	1.02	1.42	1.54
K	.51	.67	1.06
M	1.5	.87	.98
N	.49	.45	.81
P	1.42	1.69	2.05
Q	.33	.32	.32
R	.276	.394	.472
S	.197	.276	.433
T	.571	.75	.98
X	.69	1.0	1.56
Weight	1.8	2.7	5.7

USA

J Plunger Thread	—	1/2 - 13 x 25/32	5/8 - 11 x 1-1/4
Part No., Spring Extended	**—**	**CLR-1923-701-WS**	**CLR-1925-701-WS**
Part No., Air Extended without spring return	**—**	**—**	**—**
Part No., Air Extended with spring return	**—**	**CLR-1923-703-WS**	**—**

METRIC

J Plunger Thread	M10 x 13	M12 x 14	M16 x 24
Part No., Spring Extended	**CLR-1921-101-WS**	**CLR-1923-001-WS**	**CLR-1925-001-WS**
Part No., Air Advanced without spring return	**CLR-1921-102-WS**	**CLR-1923-002-WS**	**CLR-1925-002-WS**
Part No., Air Extended with spring return	**CLR-1921-103-WS**	**CLR-1923-003-WS**	**CLR-1925-003-WS**

CARR LANE ROEMHELD MFG. CO.
Sales—Phone (314) 647-6200 Fax (314) 647-5736
Engineering—Phone 1-800-827-2526 Fax (636) 386-8034

Work Supports

7500 psi max
Single acting

Spring Extended

- **Can support over 5 tons**
- **Height adjusts automatically**
- **Support plunger held by an advanced design sliding-fit pressure sleeve**
- **Sleeve holds plunger absolutely vertical, locked or unlocked**
- **Height repeatability within +.0002 inches!**
- **Contact force easily adjustable from 2 to 20 lbs**

** **Do not use NPT fittings**

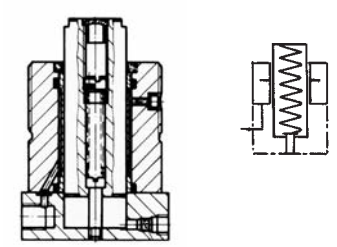

APPLICATION: Hydraulic work supports are used to provide a self-adjusting rest for the workpiece during the machining operations. They compensate the workpiece surface irregularities, also deflection and vibration under machining loads.

DESCRIPTION: The spring-loaded plunger positions itself against the workpiece with an adjustable light spring force. Hydraulic locking is made together with hydraulic clamping of the workpiece, or independently. The support plunger is provided with female thread to enable the use of threaded bolts for height adjustment. Oil supply can be supplied from the side or from below.

The internal parts of the work support are protected against dust and chips by a sintered metal air filter.

Recommended minimum pressure 1450 psi.

IMPORTANT NOTES: If there is any danger of fluids being sucked into the filter, a vent hose has to be connected. Spring force should not be used to lift workpieces.

Contact bolts and extensions with large weight can influence the functions of this component.

The plunger internal thread should always be plugged by a plastic cap or a screw-in extension to protect the element against penetration of liquids.

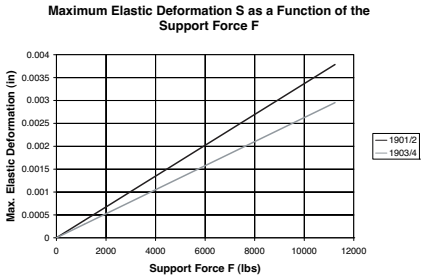

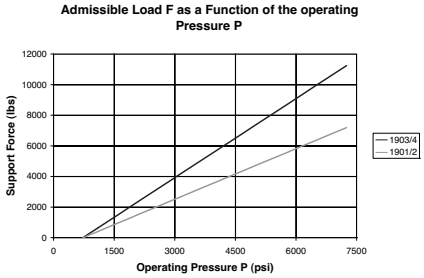

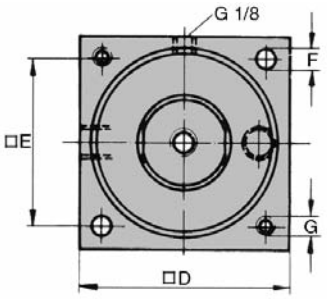

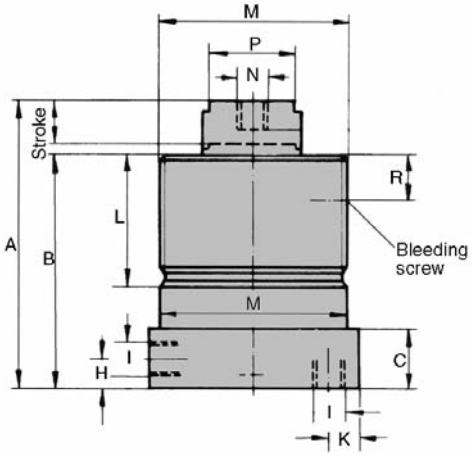

Load Capacity at 7500 psi	7400 Lbs	11600 Lbs
Plunger Dia.	1.26	1.57
Plunger Stroke	.63	.71
Min. psi	1450	1450
Contact Force (lbs)	2-20	2-20
A	4.41	4.65
B	3.54	3.78
C	.95	.95
D	2.95	3.35
E	2.244	2.677
F	.27	.35
H / K	.47	.47
I	G 1/4	G 1/4
L	1.57	2.13
M dia.	M 68 x 2	M 78 x 2
P	1.06	1.42
R	.79	.71
Weight (lbs)	6	8 1/2

USA

G	—	5/16 - 18
N	—	1/2 - 13 X 15/32
Part No., Side Port	**—**	**CLR-1903-701-WS**
Part No., Lock Nut	**—**	**CLR-3522-007-WSA**

METRIC

G	M 6	M 8
N	M 12 x 12	M 12 x 12
Part No., Side Port	**CLR-1901-001-WS**	**CLR-1903-001-WS**
Part No., Bottom Port	**CLR-1902-001-WS**	**CLR-1904-001-WS**
Part No., Lock Nut	**CLR-3522-008-WSA**	**CLR-3522-007-WSA**

SWIFTSURE®

CARR LANE ROEMHELD MFG. CO.

Sales—Phone (314) 647-6200 Fax (314) 647-5736
Engineering—Phone 1-800-827-2526 Fax (636) 386-8034

Work Supports

7500 psi max
Single acting

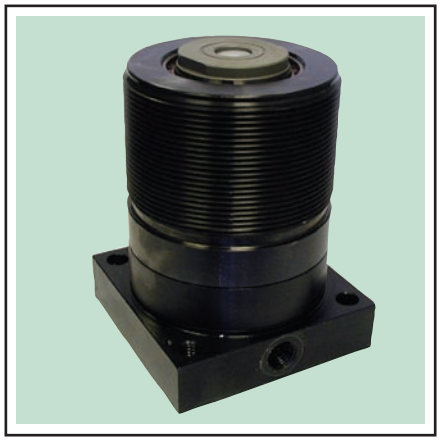

Fluid Advanced

- **Can support over 5 tons**
- **Height adjusts automatically**
- **Support plunger held by an advanced design sliding-fit pressure sleeve**
- **Sleeve holds plunger absolutely vertical, locked or unlocked**
- **Height repeatability within +.0002 inches!**

** **Do not use NPT fittings**

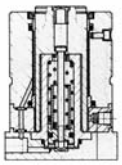

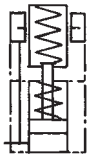

DESCRIPTION: With the 1910 range the support plunger is retracted in home position. When pressurized the support plunger moves against the inserted workpiece by means of light force. With increasing oil pressure, the plunger locks hydraulically. After the system has been unclamped, the support plunger returns to home position. The support plunger is provided with female thread to enable the use of threaded bolts for height adjustment. Oil supply can be supplied from the side or from below. The internal parts of the work support are protected against chips and dust by a sintered metal air filter.

IMPORTANT NOTES: If there is any danger of fluids being sucked into the air filter, a vent hose has to be connected. Spring force should not be used to lift workpieces.

Contact bolts and extensions with large weight can influence the functions of this component.

The plunger internal thread should always be plugged by a plastic cap or a screw-in extension to protect the element against penetration of liquids.

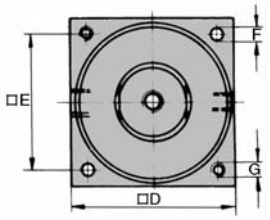

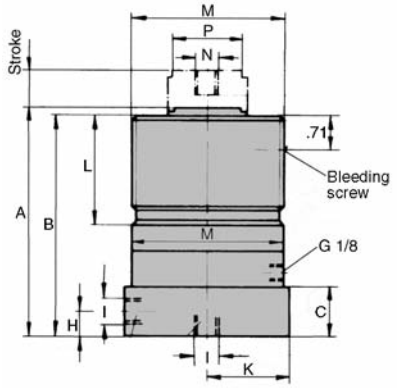

Admissible Load F as a Function of the Operating Pressure P

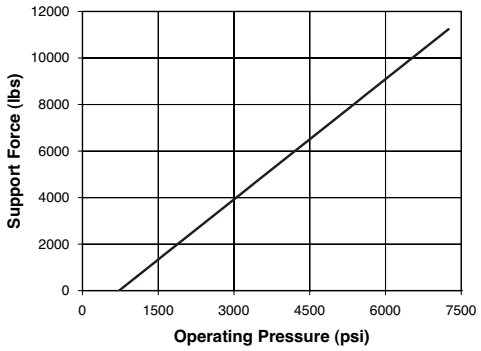

Load Capacity at 7500 psi	11600 Lbs	
Port Location	**Side**	**Bottom**
Plunger Dia.	1.57	1.57
Plunger Stroke	.71	.71
Min. psi	1450	1450
Max Flow Rate (cu. In. / min)	250	250
Contact force lbs.	13.5 - 22.5	13.5 - 22.5
A	4.53	4.74
B	4.37	4.57
C	.83	1.04
D	3.35	3.35
E	2.677	2.677
F	.35	.35
H	.43	—
I	G 1/4	G 1/4
K	—	1.67
L	2.13	2.13
M dia.	M 78 x 2	M 78 x 2
P	1.42	1.42
Weight (lbs)	10	10

USA

G	5/16 - 18	—
N	1/2 - 13 X 15/32	—
Part No.	**CLR-1911-721-WS**	**—**
Part No., Lock Nut	**CLR-3522-007-WSA**	**—**

METRIC

G	M 8	M 8
N	M 12 x 12	M 12 x 12
Part No.	**CLR-1911-021-WS**	**CLR-1912-021-WS**
Part No., Lock Nut	**CLR-3522-007-WSA**	

SWIFTSURE®

CARR LANE ROEMHELD MFG. CO.

Sales—Phone (314) 647-6200 Fax (314) 647-5736
Engineering—Phone 1-800-827-2526 Fax (636) 386-8034

Work Supports

7500 psi max
Double acting

Fluid Advanced Double Acting

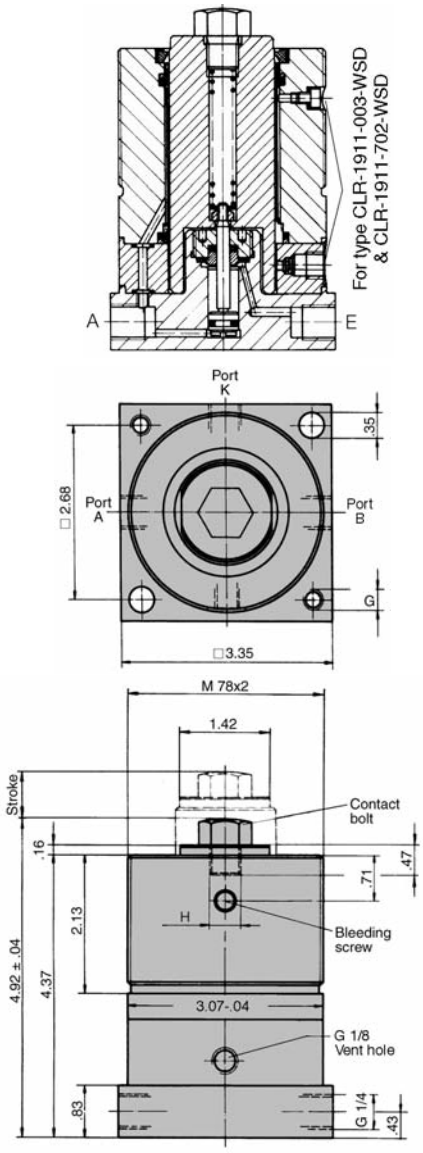

- **Can support over 5 tons**
- **Height adjusts automatically**
- **Support plunger held by an advanced design sliding-fit pressure sleeve**
- **Sleeve holds plunger absolutely vertical, locked or unlocked**
- **Height repeatability within +.0002 inches!**

****Do not use NPT fittings**

Admissible Load F as a Function of the Operating Pressure P

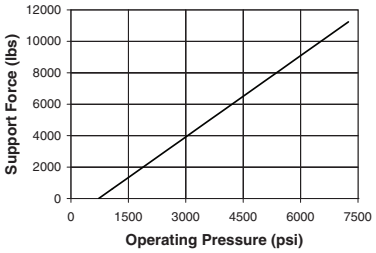

Maximum Elastic Deformation S as a Function of the Support Force F

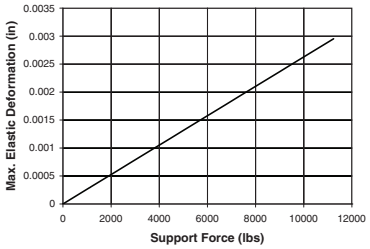

APPLICATION: Work supports are used to provide a self-adjusting rest to avoid deflection and vibration of the workpieces during machining.

It is recommended to use double-acting elements if applied in larger hydraulic clamping fixtures with long lines, especially if the return oil is cycled and has to return in a predetermined time.

DESCRIPTION: This hydraulic work support contains a double-acting sliding cylinder. If pressurized at port "A" the piston pushes the plunger with little force against the workpiece by means of a spring. As soon as the piston has touched the internal stop, the pressure rises and thus the locking of the plunger. The plunger retracts into de-pressurized mode automatically after the pressure supply has been transferred to port "B".

If the flow rate is too high the plunger will lock before it has touched the workpiece. With type CLR-1911-004-WSD it is possible to effect locking separately through port "K".

IMPORTANT NOTES**:** The internal part of the work support is protected against dust and chips by a sintered metal air filter. If there is any danger of fluids being sucked into the filter, a vent hose has to be connected and routed to a dry area. The contact bolt must only be removed if it is replaced by another contact bolt with 12mm thread length.

Spring force should not be used to lift workpieces. Contact bolts and extensions with large weight can influence the functions of this component.

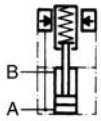

A = Extending + locking
B = Retracting

CLR-1911-003-WS
CLR-1911-702-WSD

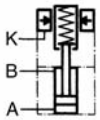

A = Extending
B = Retracting
K = Locking

CLR-1911-004-WSD

Load Capacity at 7500 psi	**11600** Lbs	
Support force at 2000 psi	2300 lbs	
Fluid Ports	2 (A & B)	3 (A,B & K)
Plunger Dia.	1.57	1.57
Plunger Stroke	.71	.71
Min. psi	1500	1500
Max Flow Rate (cu. In. / min)	90	90
Contact force lbs.	11.25 - 22.5	11.25 - 22.5
Weight (lbs)	10	10

USA

G	5/16 - 18	—
H	1/2 - 13 X 15/32	—
Part No., Side Port	**CLR-1911-702-WSD**	**—**
Part No., Lock Nut	**CLR-3522-007-WSA**	**—**

METRIC

G	M 8	M 8
H	M 12 x 12	M 12 x 12
Part No., Side Port	**CLR-1911-003-WSD**	**CLR-1911-004-WSD**
Part No., Lock Nut	**CLR-3522-007-WSA**	

SWIFTSURE®

CARR LANE ROEMHELD MFG. CO.

Sales—Phone (314) 647-6200 Fax (314) 647-5736
Engineering—Phone 1-800-827-2526 Fax (636) 386-8034

Power Vises and Universal Fixtures

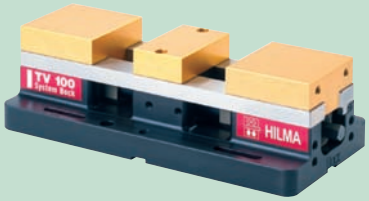

Twin Vises
pages 59.1

Tower Clamping Systems
page 59.2

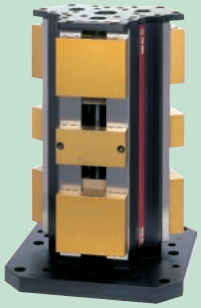

Machine Vises with Quick-Change Jaws

Hilma-Bock vises feature quick-change aluminum jaws that snap on and off in seconds without any tools. These twin vises clamp two workpieces simultaneously against a fixed center jaw. Jaws can be completely milled out to suit the workpiece's contour (both sides can be used). Available as individual vises, or in Tower Clamping Systems, in manual and hydraulic versions.

Standard Machine Vises
See Website

Machining-Center Vises
pages 61.1-61.2

Precision Machine Vises

Clamp with the exact force desired every time, for improved part quality. Use individually or in multiples to reduce machine tool load/unload time. Also an excellent alternative to manual bench vises in assembly operations when frequent clamping and unclamping are required. Finest quality construction for accuracy and long life. Machining-Center Vises are precisely qualified in all three axes. Use with top step jaws or custom fixturing to hold difficult parts.

pages 64-65.1

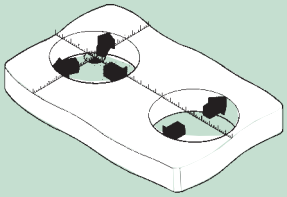

Concentric Clamps

Concentric Clamping Elements are used to simultaneously locate and clamp on internal diameters from 1" to 10" and are ideal for precision clamping of cubic and cylindrical workpieces. 3-point elements provide primary location, centering the workpiece in two axes. 2-point elements provide secondary location, centering in one axis.

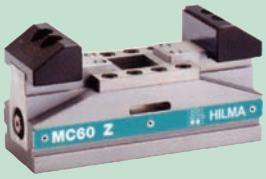

See Website

See Website

Mini Clamp Vises

MC-series Mini Clamp Vises are designed especially for multi-face machining with a single clamping operation. Unique design allows clear tool access to five-out-of-six workpiece sides. Ideal for machining complicated workpieces in a single clamping operation, such as in mold making. Mini-Clamp Vises are small, but have a large holding capacity. Finest quality construction for excellent rigidity and durability.

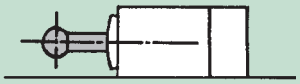

Single
page 71

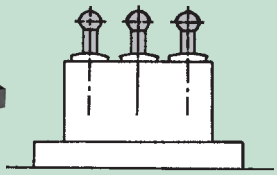

Triple
page 71.1

Collet Vises

Perfect for accurately holding round, square or hex-shaped workpieces. Uses standard 5C collets, including step collets for large diameters, expanding collets for ID clamping, and emergency collets for special shapes. Mounts either vertically or horizontally. An advanced locking mechanism insures positive workpiece releasing every time.

See Website

Zero-Point Quick Pallet Clamp

These handy starter kits can be configured in various ways to allow you to change your fixture plate in seconds. Each plate will give 4,400 lbs. of clamping force (2,200 lbs. per clamp). Location of pallet is done by the outer diameter of the nipples. Hydraulic pressure is only required to release the pallet. Other types of pallet clamping options are available upon request.

Machine Vises with Quick-Change Jaws

Mechanical and hydraulic

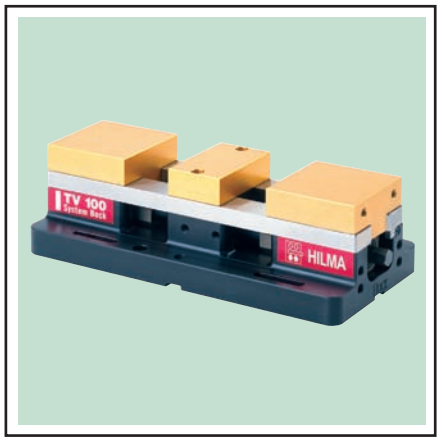

Twin Vises

- **The vise's quick-change aluminum jaws snap on and off in seconds, without any tools**
- **Used to clamp two workpieces simultaneously against a fixed center jaw**
- **Jaws can be completely milled out to suit the workpiece's contour, using both sides**
- **Locating pins provide exact positioning of the center jaw**
- **Useful for contract workers, tool and mold makers, as well as for mass production**
- **Leadscrew assembly provides a downthrust effect and is fully sealed to keep out dirt and chips**

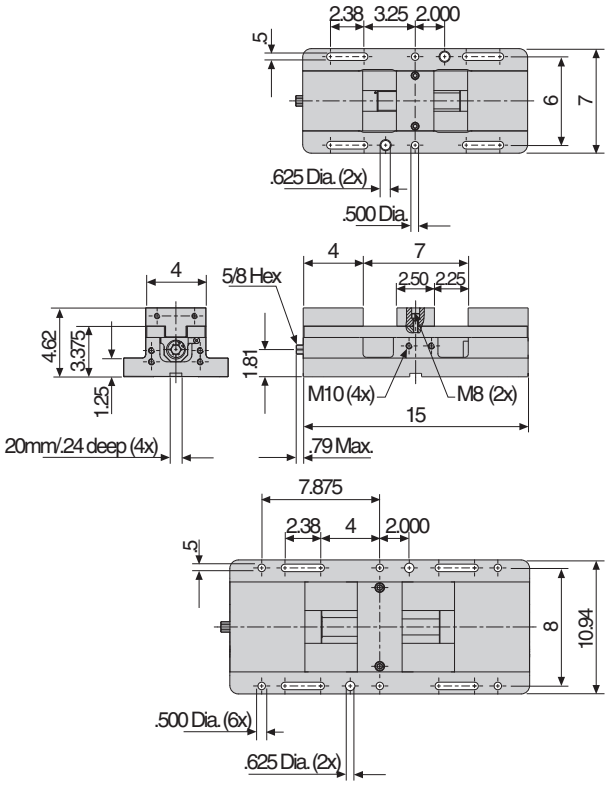

NEW ITEM!

DESCRIPTION: Hilma-Bock Twin vises are ideally suited for clamping workpieces with complex clamping and contact contours. In many cases, special clamping fixtures are not necessary. The vises allow for easy preparation for clamping, stop and contact surfaces in aluminum jaws, which can be completely milled out.

The vise's fully encapsulated spindle allows for trouble-free operation. Power transmission is through an inserted steel nut.

ACCESSORIES: Additional sets of jaws are available (CLRH-SJS-100-VSA for 4" width, and CLRH-SJS-150-VSA for 6" width). Also available are stop plates, required for retrofitting for large clamping ranges (part number CLRH-CP-150-VSA).

OPERATION OF MANUAL VERSION: Turn spindle clockwise to clamp, counterclockwise to unclamp.

OPERATION OF HYDRAULIC VERSION: Adjust jaw opening to the workpiece using a crank handle. When fluid pressure is applied by actuating the external power unit, the sliding jaw moves through its power stroke (.250" maximum total stroke for safety — .125" per jaw) to apply full clamping force. Unclamping is by positive spring return.

MOUNTING DIRECTLY ON MACHINE TABLE: Vises are slotted in both directions for 20mm fixture keys, to provide accurate mounting on T-slotted machine tables. Use two Step Fixture Keys to adapt to a specific table-slot size. Fasten with four socket-head cap screws using the mounting slots provided. This allows very close mounting of vises without external clamps.

MOUNTING ON A MODULAR TOOLING PLATE: Vises have two 5/8"-diameter locating holes for repeatable mounting on any Carr Lane modular tooling plate (2" grid pattern) using Fixture Locating Pins. Fasten with four socket-head cap screws using the mounting slots provided.

CONVERTING TO A SINGLE-PART VISE: An optional Stop Plate allows converting one of the sliding jaws to a fixed jaw so that a single, large workpiece can be clamped when the center jaw is removed.

CONSTRUCTION: High-strength aluminum body with hardened and ground steel guideways. Two large outlets on each side for chips and coolant.

Slim Base also available in both 4" and 6" widths. Contact engineering for price and availability.

Jaw Width	4"	6"
Weight (lbs)	31	66
Part No., Manual	**CLRH-TV100SST-H-VS**	**CLRH-TV150SST-H-VS**
Part No., Hydraulic	**CLRH-HTV100SST-H-VS**	**CLRH-HTV150SST-H-VS**

SWIFTSURE®

CARR LANE ROEMHELD MFG. CO.

Sales—Phone (314) 647-6200 Fax (314) 647-5736
Engineering—Phone 1-800-827-2526 Fax (636) 386-8034

Machine Vises with Quick-Change Jaws

Manual and hydraulic

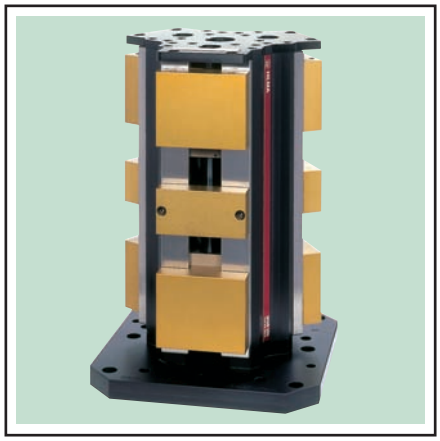

Four-Sided Tower Clamping System

- **The vise's quick-change aluminum jaws snap on and off in seconds, without any tools**
- **Used to clamp two workpieces simultaneously against a fixed center jaw**
- **Jaws can be completely milled out to suit the workpiece's contour, using both sides**
- **Locating pins provide exact positioning of the center jaw**
- **Useful for contract workers, tool and mold makers, as well as for mass production**
- **Leadscrew assembly provides a downthrust effect and is fully sealed to keep out dirt and chips**

NEW ITEM!

DESCRIPTION: These Hilma-Bock tower clamping systems contain four twin vises that each clamp two workpieces simultaneously against a fixed center jaw. Locating pins provide exact positioning of the center jaw. Quick-change aluminum jaws snap on and off in seconds, and can be completely milled out for each workpiece's contour. Leadscrew assembly provides a downthrust effect and is fully sealed to keep out dirt and chips. Vises can be mounted directly on a T-slotted machine table, or on a Carr Lane modular tooling plate for repeatable location in both x and y axes.

SIZES: Available in two sizes, 4" and 6" jaw width.

OPERATION OF MANUAL VERSION: Turn spindle clockwise to clamp, counterclockwise to unclamp. Each side operates independently.

OPERATION OF HYDRAULIC VERSION: Adjust jaw opening to the workpiece using a crank handle. When fluid pressure is applied by actuating the external power unit, the sliding jaw moves through its power stroke (.250" maximum total stroke for safety — .125" per jaw) to apply full clamping force. Unclamping is by positive spring return.

MOUNTING: Fasten to pallet with four or eight socket-head cap screws, depending on pallet size, using the mounting holes provided.

CONVERTING TO SINGLE-PART VISES: Tower Clamping Systems include an adaptor plate which allows converting the upper sliding jaw of all the vises to a fixed jaw so that a single, large workpiece can be clamped when the center jaw is removed.

CONSTRUCTION: High-strength aluminum body with hardened and ground steel guideways.

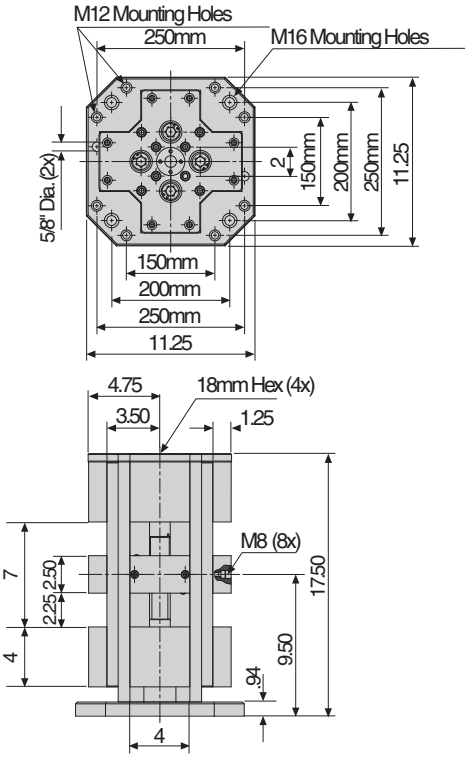

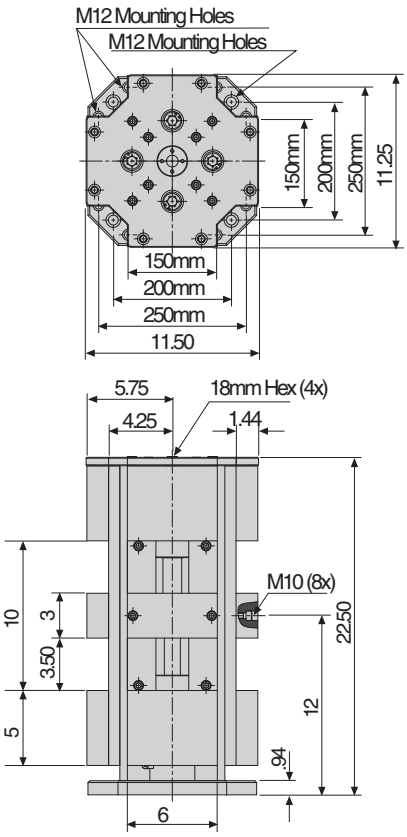

Leadscrew assembly provides a downthrust effect and is fully sealed to keep out dirt and chips.

Also available for indexers, and in manual three-sided and six-sided versions. Please contact engineering for additional information.

Jaw Width	4"	6"
Weight (lbs)	100	200
Part No., Manual	**CLRH-MQS100-8-H-VS**	**CLRH-MQS150-8-H-VS**
Part No., Hydraulic	**CLRH-HMQS100-8-H-VS**	**CLRH-HMQS150-8-H-VS**

SWIFTSURE®

CARR LANE ROEMHELD MFG. CO.

Sales—Phone (314) 647-6200 Fax (314) 647-5736
Engineering—Phone 1-800-827-2526 Fax (636) 386-8034

Machining-Center Vises

5000 psi max
Single acting

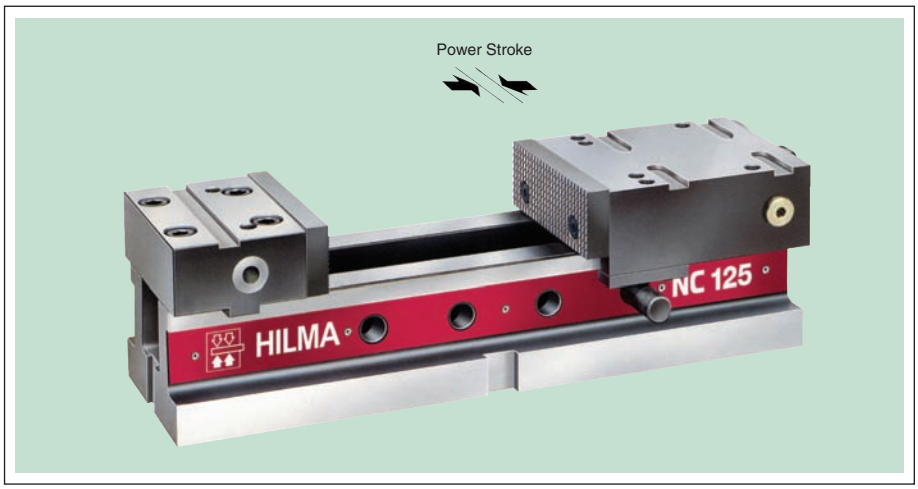

NC Series
Hydraulic

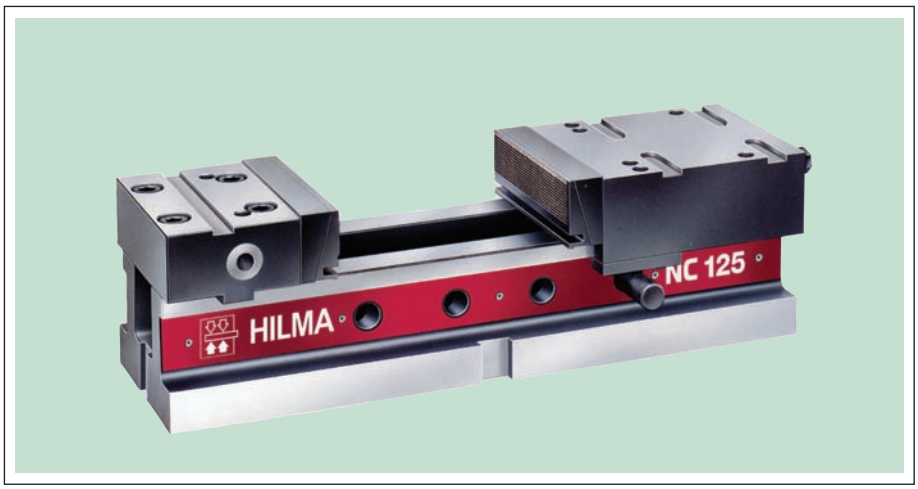

NC Series
Hydra-Mechanical

- **Hydraulic version provides automatic power clamping with exact high force at the push of a button (requires external power unit)**
- **Hydra-mechanical version is manually operated, with final high force applied easily using hydraulic power assist**
- **Finest-quality construction for excellent rigidity and durability**
- **Choice of three sizes**

OPERATION OF HYDRAULIC VERSION: To set up initially, adjust jaw opening to the workpiece using the removable crank handle. When fluid pressure is applied by actuating the external power unit, the sliding jaw moves through its power stroke to apply full clamping force (.276" maximum stroke for safety). Unclamping is by positive spring return.

OPERATION OF HYDRA-MECHANICAL VERSION: Turning the crank handle clockwise moves the sliding jaw mechanically toward the workpiece. Once resistance is met, further turning automatically disengages the screw spindle and gradually applies full hydraulic pressure, with relatively little effort. Turn handle counterclockwise to unclamp.

MOUNTING: Vises and swivel bases are all slotted underneath for 20mm fixture keys, to provide accurate mounting on T-slotted machine tables. Use two Step Fixture Keys to adapt to a specific table-slot size (see tooling-component catalog section). A hardened steel pin fits into any of the adjustment holes on each side of the guide rails, to provide quick coarse adjustment of jaw opening.

ACCESSORIES: A crank handle is furnished with each vise. Optional right-angle-drive units (hydra-mechanical version only) are highly recommended if vises are mounted vertically.

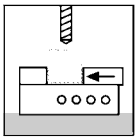
Horizontal Mounting

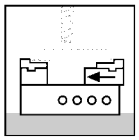
Accepts Top Jaws

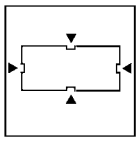
Two-Axis Location

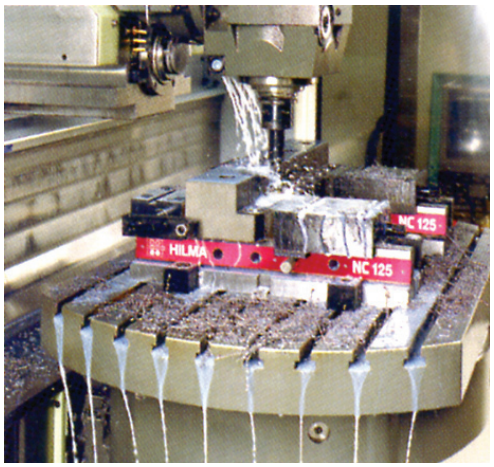

NC-Series vises are ideal for precision, high-production machining on all types of vertical machining centers.

SWIFTSURE®

CARR LANE ROEMHELD MFG. CO.

Sales—Phone (314) 647-6200 Fax (314) 647-5736
Engineering—Phone 1-800-827-2526 Fax (636) 386-8034

Machining-Center Vises

5000 psi max
Single acting

Hydraulic

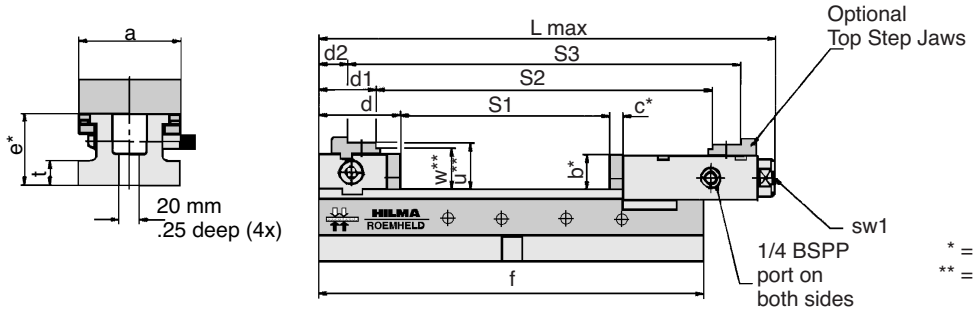

* = Tolerance ± .0004
** = Tolerance ± .0008

Hydra-Mechanical

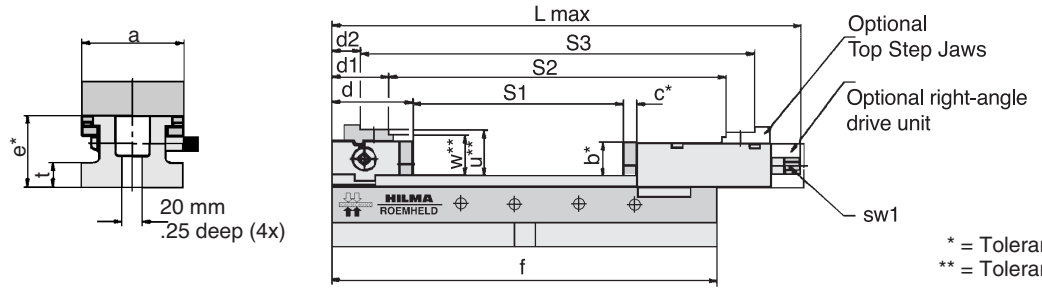

* = Tolerance ± .0004
** = Tolerance ± .0008

Jaw Width	100mm	125mm	160mm
a	3.937	4.921	6.299
b	1.3386	1.7717	2.1260
c	.5118	.5906	.7087
d	3.1496	3.9370	4.7244
d1	2.2047	2.7165	2.8346
d2	1.1024	1.3780	1.4567
e	2.7559	3.2283	3.7402
f	14.96	16.93	21.65
t	.94	1.06	1.06
u	1.7717	2.2835	2.7559
w	1.5748	2.0866	2.5591
Weight (lbs)	41	69	129

Hydraulic Vises

Max. clamping force (lbs)	5500	8900	14000
Power stroke	.197	.197	.276
Max. operating pressure (psi)	5000	5000	5000
Fluid required (cu.in.)	.31	.43	.85
L max	17.95	20.39	26.57
S1	8.23	8.98	12.36
S2	13.15	14.41	20
S3	15.35	17.09	22.76
sw1	8mm	8mm	10mm
Part No., Vise	**CLRH-3082-02-VS**	**CLRH-3083-02-VS**	**CLRH-3084-02-VS**

Optional Right-Angle Drive Unit for Hydra-Mechanical Version

Hydra-Mechanical Vises

Max. clamping force (lbs)	5600	9000	11000
Max. cranking force required (lbs)	11	17	21
crank throw	3.15	3.94	4.92
L max	18.27	20.71	26.93
S1	8.07	8.86	12.17
S2	12.99	14.29	19.80
S3	15.20	16.97	22.56
sw1	14mm	17mm	19mm
Part No., Vise	**CLRH-3072-02-VS**	**CLRH-3073-02-VS**	**CLRH-3074-02-VS**
Part No., Right-Angle Drive Unit	**CLRH-3294-05-VSA**	**CLRH-3294-06-VSA**	**CLRH-3294-07-VSA**

CARR LANE ROEMHELD MFG. CO.
Sales—Phone (314) 647-6200 Fax (314) 647-5736
Engineering—Phone 1-800-827-2526 Fax (636) 386-8034

Machining-Center Universal Vises

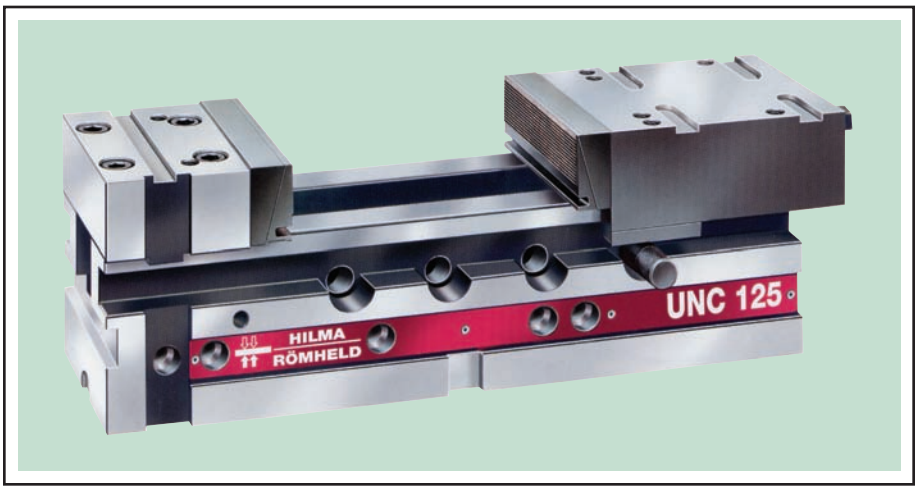

UNC Series
Hydra-Mechanical

- **Can be mounted horizontally, vertically, or on its side**
- **Hydra-mechanical version is manually operated, with final high force applied easily using hydraulic power assist**
- **Finest-quality construction for excellent rigidity and durability**

OPERATION OF HYDRA-MECHANICAL VERSION: Turning the crank handle clockwise moves the sliding jaw mechanically toward the workpiece. Once resistance is met, further turning automatically disengages the screw spindle and gradually applies full hydraulic pressure, with relatively little effort. Turn handle counterclockwise to unclamp.

ACCURACY: Vise bed is flame hardened and precision ground to ± .0004" of height dimension (H2). This excellent accuracy means that no special "matching" of vises is required.

MOUNTING: Mounting holes for socket-head cap screws are built into the base. This allows very close mounting of vises without external clamps.

ACCESSORIES: A crank handle is furnished with each vise. Optional right-angle-drive units (hydra-mechanical version only) are highly recommended if vises are mounted vertically.

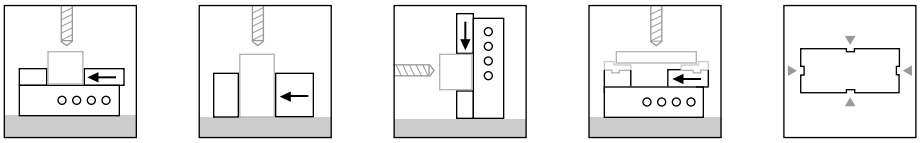

Horizontal Mounting | Side Mounting | Vertical Mounting | Accepts Top Jaws | Two-Axis Location

Optional Right-Angle Drive Unit

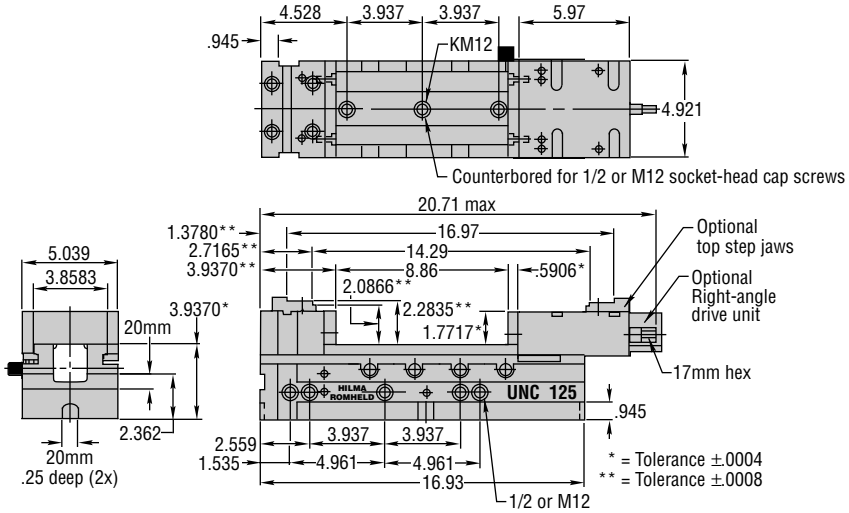

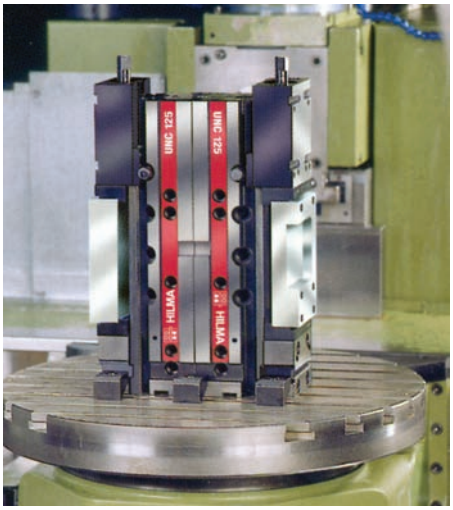

UNC-series vises offer maximum mounting versatility. Shown here are two vises mounted back-to-back vertically on a horizontal machining center.

Jaw Width	125mm
Maximum clamping force (lbs)	9000
Maximum cranking force required (lbs)	17
Crank throw	3.94
Weight (lbs)	88
Part No., Vise	**CLRH-3093-02-VS**
Part No., Right-Angle Drive Unit	**CLRH-3294-06-VSA**

SWIFTSURE®

CARR LANE ROEMHELD MFG. CO.

Sales—Phone (314) 647-6200 Fax (314) 647-5736
Engineering—Phone 1-800-827-2526 Fax (636) 386-8034

Machining-Center Double Vises

5000 psi max
Single acting

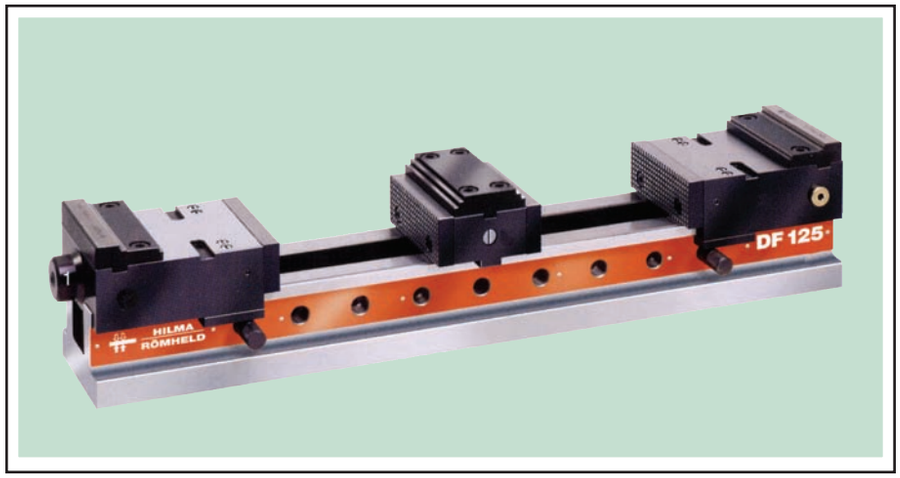

Flex Series
Hydraulic

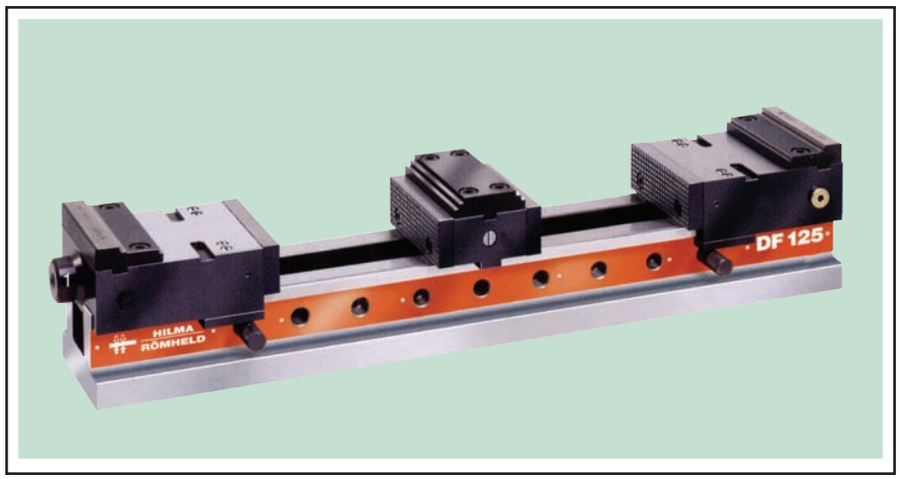

Flex Series
Hydra-Mechanical

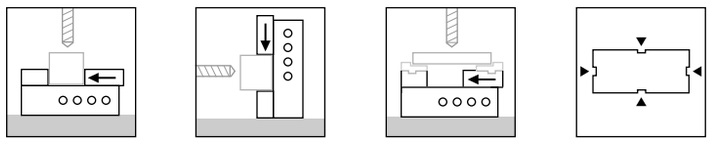

Horizontal Mounting | Vertical Mounting | Accepts Top Jaws | Two-Axis Location

- **Allows clamping two workpieces, against a fixed center locator, in about the same space as a normal vise**
- **Can be mounted horizontally or vertically**
- **Independent adjustment of each sliding jaw permits two different clamping setups in one vise**

OPERATION OF HYDRAULIC VERSION: To set up initially, adjust jaw opening to the workpiece using the removable crank handle. When fluid pressure is applied by actuating the external power unit, the sliding jaw moves through its power stroke to apply full clamping force (.197-.276" maximum stroke for safety). Unclamping is by positive spring action.

OPERATION OF HYDRA-MECHANICAL VERSION: Turning the crank handle clockwise moves the sliding jaw mechanically toward the workpiece. Once resistance is met, a slight tap on the handle automatically disengages the spindle screw, and further turning gradually applies full hydraulic pressure with relatively little effort. The amount of clamping force can be exactly controlled by watching the pressure gauge. Turn handle counterclockwise to automatically reengage the spindle and unclamp. Each sliding jaw operates independently.

ACCURACY: Machining-center vises are precisely qualified in all three axes. Jaw height and fixed-jaw position are accurate to ± .0004". The tops of both the fixed and sliding jaws are precision ground ±.0004", with precisely located keyslots, to provide an accurate base for top step jaws or custom fixturing. All locating holes for mounting on modular tooling plates and blocks are held to ±.0008" for quick setups with excellent repeatability

ACCESSORIES: A crank handle is furnished with each vise. Optional right-angle-drive units (hydra-mechanical version only) are highly recommended if vises are mounted vertically.

Optional Right-Angle Drive Unit for Hydra-Mechanical Version

Please contact factory for additional information

SWIFTSURE®

CARR LANE ROEMHELD MFG. CO.

Sales—Phone (314) 647-6200 Fax (314) 647-5736
Engineering—Phone 1-800-827-2526 Fax (636) 386-8034

Vise Jaws

Machine Vise Jaws

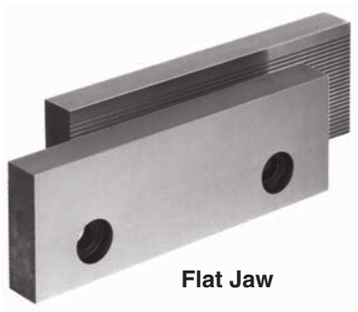
Flat Jaw

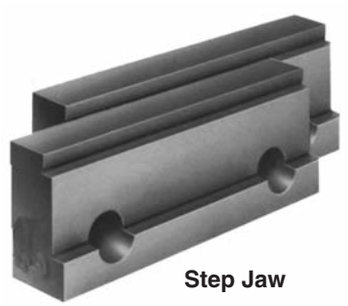
Step Jaw

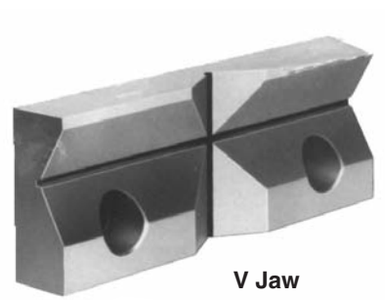
V Jaw

Swivel Jaw

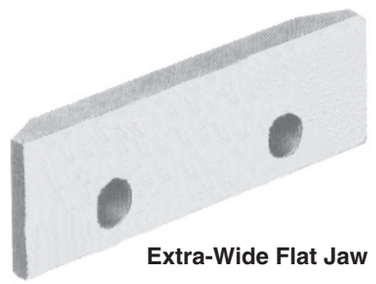
Extra-Wide Flat Jaw

Jaw Type (Single Jaw)	100mm Vise	125mm Vise	160mm Vise
Part No., Standard Flat Jaw	CLRH-5-2058-1003-VSA	CLRH-5-2058-1004-VSA	CLRH-5-2058-1005-VSA
Part No., Soft Flat Jaw	CLRH-5-2055-0097-VSA	CLRH-5-2055-0098-VSA	CLRH-5-2055-0099-VSA
Part No., Extra Wide Flat Jaw	CLRH-5-2058-1025-VSA	CLRH-5-2058-1026-VSA	CLRH-5-2058-1027-VSA
Part No., V Jaw	CLRH-5-3030-0002-VSA	CLRH-5-3030-0003-VSA	CLRH-5-3030-0004-VSA
Part No., Swivel Jaw	CLRH-3711-02-VSA	CLRH-3711-03-VSA	CLRH-3711-04-VSA
Part No., Step Jaw	CLRH-5-2082-0001-VSA	CLRH-5-2082-0002-VSA	CLRH-5-2082-0003-VSA

Quick-Insert-System Jaws

Base jaws are screwed to the fixed jaw and to the slide. Inserts, kept in place by two permanent magnets, can be changed in a few seconds.

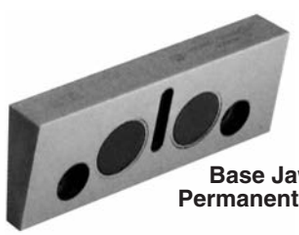
Base Jaw with Permanent Magnets

Standard Jaw Insert

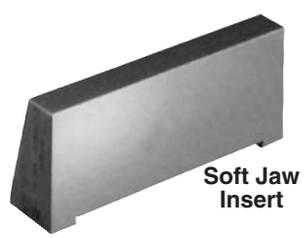
Soft Jaw Insert

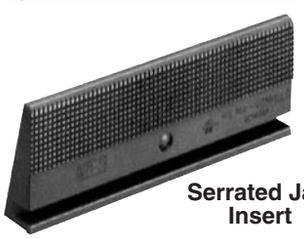
Serrated Jaw Insert

Step Jaw Insert

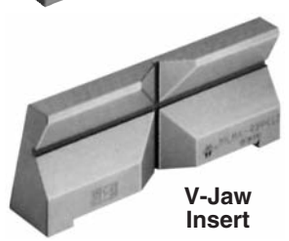
V-Jaw Insert

Jaw Type (Single Jaw)	100mm Vise	125mm Vise	160mm Vise
Part No., Magnetic Base Jaw	CLRH-3771-02-VSA	CLRH-3771-03-VSA	CLRH-3771-04-VSA
Part No., Standard Jaw Insert	CLRH-3771-12-VSA	CLRH-3771-13-VSA	CLRH-3771-14-VSA
Part No., Soft Jaw Insert	CLRH-3771-72-VSA	CLRH-3771-73-VSA	CLRH-3771-74-VSA
Part No., Serrated Jaw Insert	CLRH-3771-22-VSA	CLRH-3771-23-VSA	CLRH-3771-24-VSA
Part No., Step Jaw Insert	CLRH-3771-42-VSA	CLRH-3771-43-VSA	CLRH-3771-44-VSA
Part No., V Jaw Insert	CLRH-3771-52-VSA	CLRH-3771-53-VSA	CLRH-3771-54-VSA

Vise Accessories

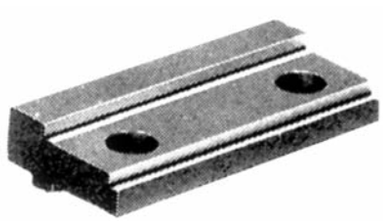

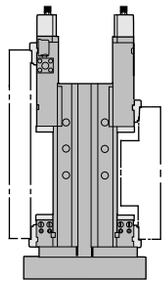

Precision step jaws that mount on top of the fixed and sliding jaws, extending jaw capacity significantly. These hardened and ground jaws are keyed to maintain excellent positional accuracy, as well as height accuracy. Note: top step jaws for sliding jaws have a wider hole spacing than those for fixed jaws. Two mounting screws are included.

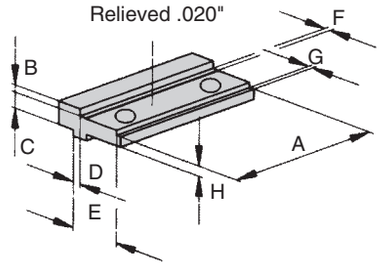

Top Step Jaws

Part No. for Fixed Jaw	Part No. for Sliding Jaw	Jaw Width	A	B	C ±.0004	D ±.0004	E ±.0004	F	G	H ±.0004
CLRH-3284-02-VSA	CLRH-3284-12-VSA	100mm	3.9370	.197	.4528	.2362	1.3386	.197	.157	.2559
CLRH-3284-03-VSA		125mm	4.9213		.5512		1.5748			.3543
CLRH-3284-04-VSA	CLRH-3284-13-VSA	160mm	6.2992		.6693	.3150	1.6929			.4724

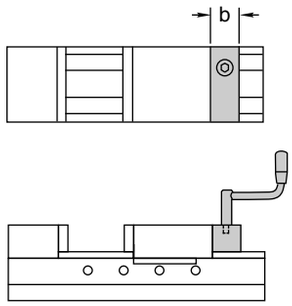

Extremely useful accessory for hydra-mechanical vises. Recommended when cranking from the end is difficult, especially when vises are mounted vertically.

Right-Angle Drive Units

Part No.	Fits Jaw Width	Drive Hex Size	Crank Throw	b	Weight (lbs)
CLRH-3294-05-VSA	100mm	10mm	4.92	1.54	.5
CLRH-3294-06-VSA	125mm			1.69	1.0
CLRH-3294-07-VSA	160mm			1.81	2.0

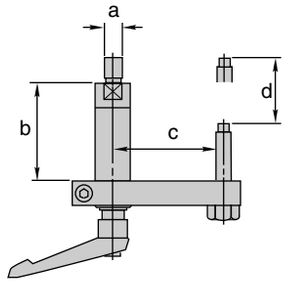

A precision workpiece stop that mounts into either side of the vise body. Reposition swing arm on the shaft by loosening the socket-head cap screw. Can be used as a swing-away stop, with the rapid-locking handle.

Adjustable Side Stops

Part No.	Fits Jaw Width	a	b max	c max	d max
CLRH-3291-02-VSA	100mm and 125mm	M12	2.40	3.74	1.81
CLRH-3291-03-VSA				4.13	
CLRH-3291-04-VSA	160mm	M16	3.19	4.88	2.60

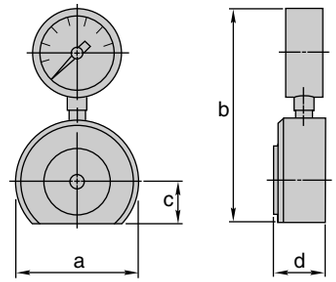

Handy gauge for measuring clamping force in hydraulic or mechanical clamping systems. Flat side allows easier positioning in-line with the clamping force, especially for vises. Choice of two force ranges.

Force Gauges (Load Cells)

Part No.	Indicating Range	a dia	b	c	d
CLRH-2-9501-0001-VSA	0-60 kN (0-13,500 lbs)	3.46	5.91	1.14	1.46
CLRH-2-9501-0002-	0-100 kN (0-22,500 lbs)	5.43	7.87	2.13	1.57

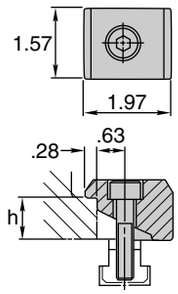

Set of four clamps with screws, for mounting one vise.

Vise Clamps

Part No.	Fits Jaw Width	h	Socket-Head cap screws (furnished)
CLRH-3777-2011-VSA	100mm	.94	M12x45mm long
CLRH-3777-3011-	125mm and 160mm	1.06	M12x45mm long
			M16x50mm long

Concentric Clamping Elements

3600 psi max
Double acting only

3-Point Element Hydraulic

2-Point Element Hydraulic

- **Combination locator and clamp, available for internal diameters from 1" to 10" (29 different sizes, each covering a small range)**
- **Plungers advance simultaneously for excellent repeatability of .0008 inches**
- **3-point elements provide primary location, centering the workpiece in both axes**
- **2-point elements provide secondary location, centering the workpiece in one axis**

APPLICATIONS: For holding workpieces with cast or machined bores, where absolute centering is required regardless of hole tolerance. If the workpiece's tolerance range falls between two clamping ranges, contact bolts can be altered or replaced to change the clamping diameter.

MOUNTING: Concentric clamping elements have two fluid passages underneath. Four mounting options are available using manifold mounting, and one option for using standard 1/4 BSPP fittings. Please contact factory for more information and mounting accessories.

DESIGN CONSIDERATIONS: Concentric clamping elements are not suitable for use on turning machines.

REMARKS FOR ORDERING: The elements, except for 4312-000/-025, are supplied with short, crowned and hardened contact bolts.

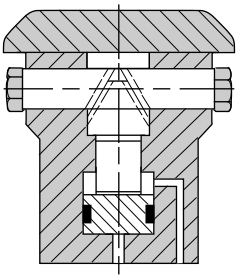

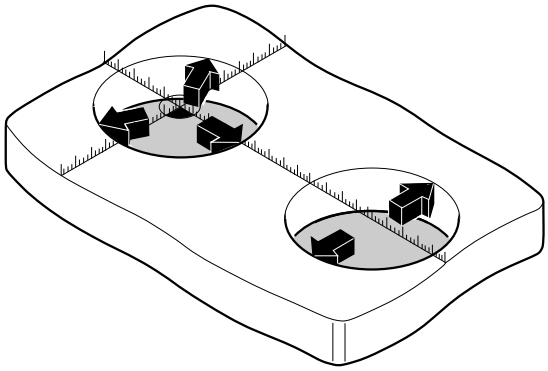

Locating and clamping on two diameters requires one 3-point element in the primary reference hole, and one 2-point element in the secondary hole.

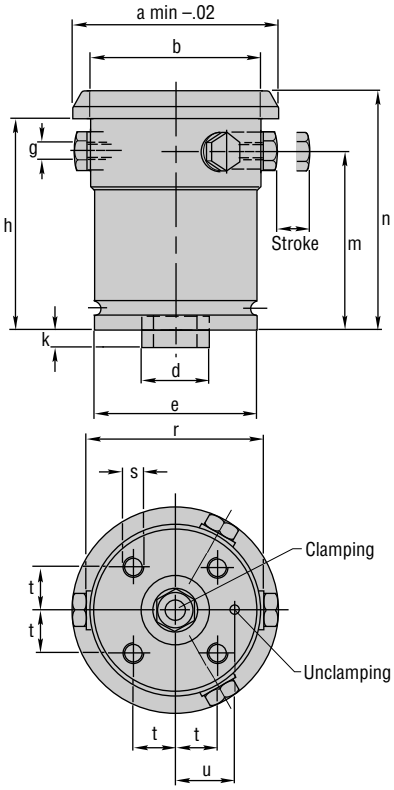

Part No. 3-Point Element	Part No. 2-Point Element	Clamping dia a	Clamping force at 3600 psi	Stroke	b dia	d dia	e dia	g	h	k	m	n	r	s	t	u
CLR-4312-025-VS	CLR-4312-000-VS	.98-1.14	2200 lbs	.10	.94	.6302 .6298	1.772 1.768	—	2.52	.236	2.01	2.62	—	M6	.445	.661
CLR-4312-026-VS	CLR-4312-001-VS	1.10-1.26														
CLR-4312-027-VS	CLR-4312-002-VS	1.26-1.42														
CLR-4312-075-VS	CLR-4312-050-VS	1.42-1.57			1.38			M8				2.83	1.14			
CLR-4312-076-VS	CLR-4312-051-VS	1.54-1.69														
CLR-4312-077-VS	CLR-4312-052-VS	1.65-1.81														
CLR-4312-078-VS	CLR-4312-053-VS	1.77-1.93														
CLR-4312-079-VS	CLR-4312-054-VS	1.89-2.05														
CLR-4312-080-VS	CLR-4312-055-VS	2.01-2.17														
CLR-4312-150-VS	CLR-4312-100-VS	2.13-2.32	1600 lbs	.12	1.77	.6302 .6298	1.772 1.768	M8	2.24	.236	1.77	2.56	1.77	M6	.445	.661
CLR-4312-151-VS	CLR-4312-101-VS	2.28-2.48														
CLR-4312-152-VS	CLR-4312-102-VS	2.44-2.64														
CLR-4312-153-VS	CLR-4312-103-VS	2.64-2.83														
CLR-4312-154-VS	CLR-4312-104-VS	2.80-2.99														
CLR-4312-250-VS	CLR-4312-200-VS	2.99-3.31	3800 lbs	.18	2.56	.9846 .9841	2.362 2.358	M6	2.68	.236	2.20	3.03	2.56	M8	.614	.866
CLR-4312-251-VS	CLR-4312-201-VS	3.27-3.58														
CLR-4312-252-VS	CLR-4312-202-VS	3.54-3.86														
CLR-4312-350-VS	CLR-4312-300-VS	3.86-4.29	6300 lbs	.24	3.35	1.2603 1.2596	2.913 2.909	M8	3.15	.236	2.52	3.58	3.35	M10	.752	1.063
CLR-4312-351-VS	CLR-4312-301-VS	4.29-4.72														
CLR-4312-352-VS	CLR-4312-302-VS	4.69-5.12														
CLR-4312-450-VS	CLR-4312-400-VS	5.12-5.71	9900 lbs	.31	4.53	1.5752 1.5746	3.543 3.539	M10	3.58	.276	2.83	4.13	4.53	M12	.917	1.299
CLR-4312-451-VS	CLR-4312-401-VS	5.55-6.14														
CLR-4312-452-VS	CLR-4312-402-VS	5.98-6.57														
CLR-4312-453-VS	CLR-4312-403-VS	6.42-6.97														
CLR-4312-550-VS	CLR-4312-500-VS	6.97-7.64	15000 lbs	.35	6.30	1.9689 1.9683	4.409 4.406	M12	3.94	.315	3.03	4.57	6.30	M16	1.142	1.614
CLR-4312-551-VS	CLR-4312-501-VS	7.52-8.19														
CLR-4312-552-VS	CLR-4312-502-VS	8.07-8.74														
CLR-4312-553-VS	CLR-4312-503-VS	8.62-9.29														
CLR-4312-554-VS	CLR-4312-504-VS	9.17-9.84														

Concentric Clamping Elements

3600 psi max
Double acting only

Direct Mounting

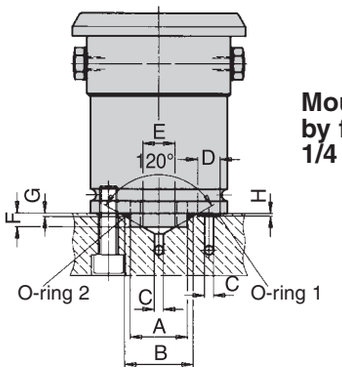

Mounting by Flange

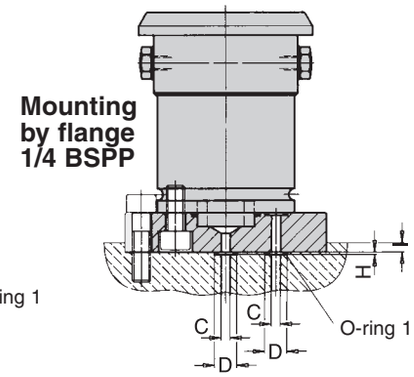

Mounting by Segments

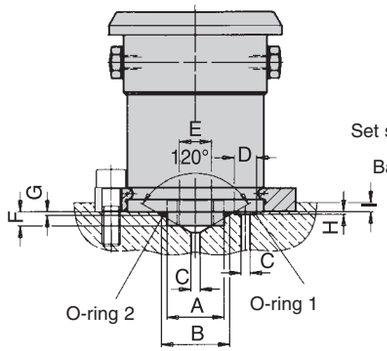

Mounting by Ball Nut

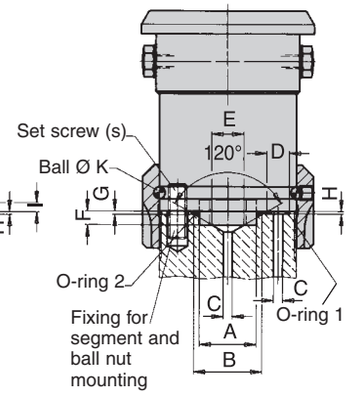

O-rings For Mounting Versions

For Elements	A+.0001	B+.008	C	D+.008	E	F-.008	G±.002	H±.002	K	O-ring 1 (mm)	Part No.	O-ring 2 (mm)	Part No.
CLR-4312-0XX-VSA	.630	.811	.12	.307	.315	.236	.051	.043	5mm	5x1.5	CLR-3000-340-SW	17.17x1.78	CLR-3000-663-SW
CLR-4312-1XX-VSA	.630	.811	.12	.307	.315	.236	.051	.043	5mm	5x1.5	CLR-3000-340-SW	17.17x1.78	CLR-3000-663-SW
CLR-4312-2XX-VSA	.984	1.181	.16	.386	.551	.236	.059	.043	6mm	7x1.5	CLR-3000-342-SW	26x2	CLR-3000-769-SW
CLR-4312-3XX-VSA	1.260	1.441	.20	.425	.630	.236	.051	.043	7mm	8x1.5	CLR-3000-343-SW	33.05x1.78	CLR-3001-238-SW
CLR-4312-4XX-VSA	1.575	1.835	.20	.425	.709	.276	.079	.043	9mm	8x1.5	CLR-3000-343-SW	40.95x2.62	CLR-3000-944-SW
CLR-4312-5XX-VSA	1.969	1.835	.20	.425	.984	.315	.079	.043	11mm	8x1.5	CLR-3000-343-SW	52.07x2.62	CLR-3001-124-SW

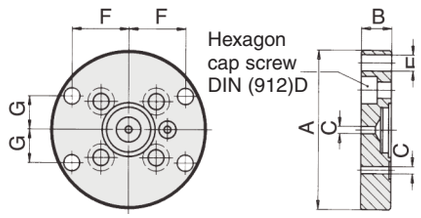

Mounting By Flange

For Elements	A	B	C	D	E DIA	F	G	Part No.
CLR-4312-0XX-VSA	2.677	.59	.12	M 6X16	.26	.953	.551	CLR-3456-033-VSA
CLR-4312-1XX-VSA	2.677	.59	.12	M 6X16	.26	.953	.551	CLR-3456-033-VSA
CLR-4312-2XX-VSA	3.465	.67	.16	M 8X20	.35	1.256	.728	CLR-3456-035-VSA
CLR-4312-3XX-VSA	4.331	.79	.20	M 10x25	.43	1.567	.906	CLR-3456-037-VSA
CLR-4312-4XX-VSA	5.118	.87	.20	M 12x25	.53	1.874	1.083	CLR-3456-038-VSA
CLR-4312-5XX-VSA	6.496	1.10	.20	M 16x30	.69	2.354	1.713	CLR-3456-039-VSA

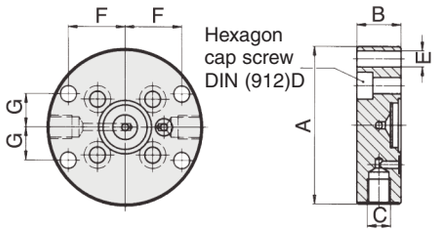

Mounting By Flange 1/4 BSPP

For Elements	A	B	C	D	E DIA	F	G	Part No.
CLR-4312-0XX-VSA	2.677	1.18	1/4 BSPP	M 6X35	.26	.953	.551	CLR-3456-042-VSA
CLR-4312-1XX-VSA	2.677	1.18	1/4 BSPP	M 6X35	.26	.953	.551	CLR-3456-042-VSA
CLR-4312-2XX-VSA	3.465	1.18	1/4 BSPP	M 8X35	.35	1.256	.728	CLR-3456-043-VSA
CLR-4312-3XX-VSA	4.331	1.18	1/4 BSPP	M 10x35	.43	1.567	.906	CLR-3456-044-VSA
CLR-4312-4XX-VSA	5.118	1.18	1/4 BSPP	M 12x35	.53	1.894	1.083	CLR-3456-045-VSA
CLR-4312-5XX-VSA	6.496	1.18	1/4 BSPP	M 16x40	.69	2.354	1.713	CLR-3456-046-VSA

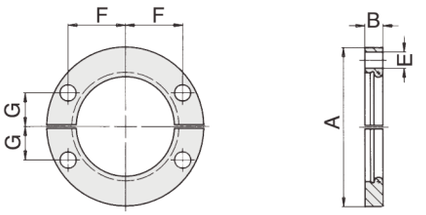

Mounting By Segments

For Elements	A	B	E DIA	F	G	Part No.
CLR-4312-0XX-VSA	2.677	.398	.26	.953	.551	CLR-3533-240-VSA
CLR-4312-1XX-VSA	2.677	.398	.26	.953	.551	CLR-3533-240-VSA
CLR-4312-2XX-VSA	3.465	.457	.35	1.256	.728	CLR-3533-241-VSA
CLR-4312-3XX-VSA	4.331	.516	.43	1.567	.906	CLR-3533-242-VSA
CLR-4312-4XX-VSA	5.118	.634	.53	1.879	1.083	CLR-3533-243-VSA
CLR-4312-5XX-VSA	6.496	.752	.69	2.354	1.713	CLR-3533-244-VSA

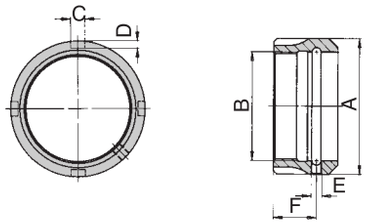

Mounting By Ball Nut (with Balls and Screws)

For Elements	A	B	C	D	E DIA	F	Part No.
CLR-4312-0XX-VSA	2.480	M48x1.5	.315	.138	M 6	.87	CLR-0352-762-VSA
CLR-4312-1XX-VSA	2.480	M48x1.5	.315	.138	M 6	.87	CLR-0352-762-VSA
CLR-4312-2XX-VSA	3.071	M60x1.5	.315	.138	M 8	.98	CLR-0352-763-VSA
CLR-4312-3XX-VSA	3.701	M75x2	.394	.157	M 10	1.06	CLR-0352-765-VSA

CARR LANE ROEMHELD MFG. CO.
Sales—Phone (314) 647-6200 Fax (314) 647-5736
Engineering—Phone 1-800-827-2526 Fax (636) 386-8034

Concentric Clamping Elements

3600 psi max
Double acting only

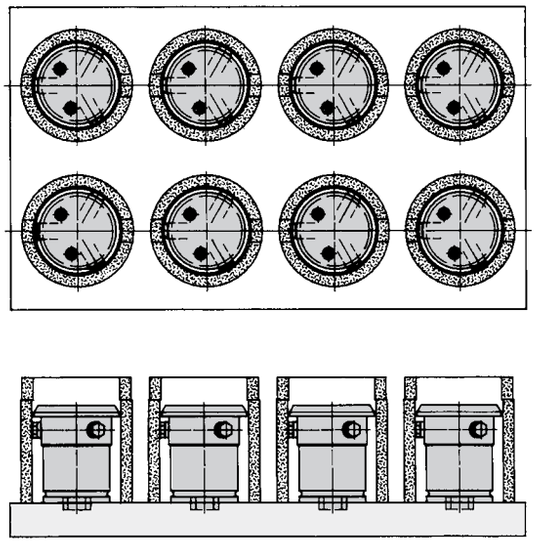

Locating and clamping on a single diameter requires one 3-point element. In this example, eight workpieces are clamped close together using eight 3-point elements.

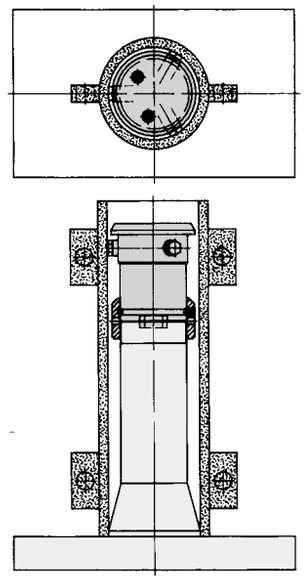

In this example, a long tubular part is centered by a fixed locator at one end, then located and clamped with a 3-point element at the other end.

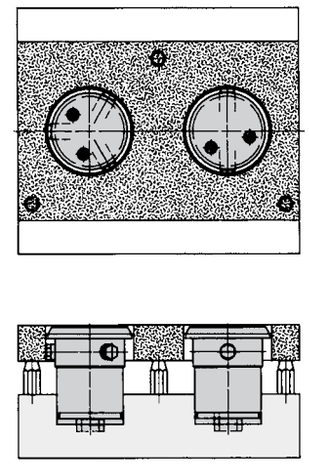

Locating and clamping on two diameters requires one 3-point element in the primary reference hole, and one 2-point element in the secondary hole. Height location in this example is by three fixed Screw Rest Pads.

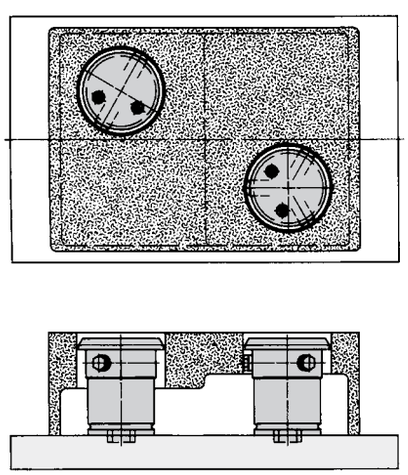

When locating and clamping on two offset diameters, turn the 2-point element so that it extends perpendicular to the axis between the holes.

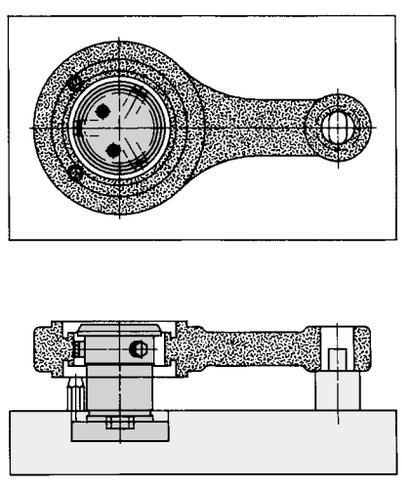

If one of the two holes is too small for a concentric clamping element, a fixed diamond locating pin can be used instead of the 2-point element, along with a 3-point element in the larger hole for clamping.

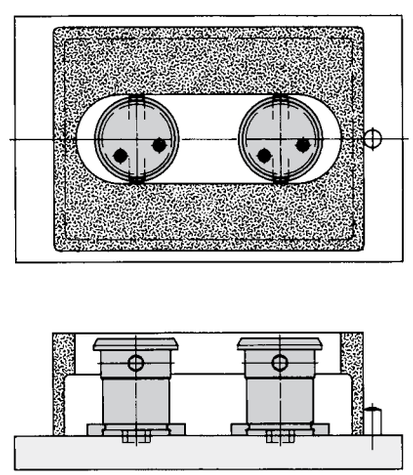

Locating and clamping in a slot can be accomplished using two 2-point elements, along with a locating pin for lateral location.

Super Compact Clamp

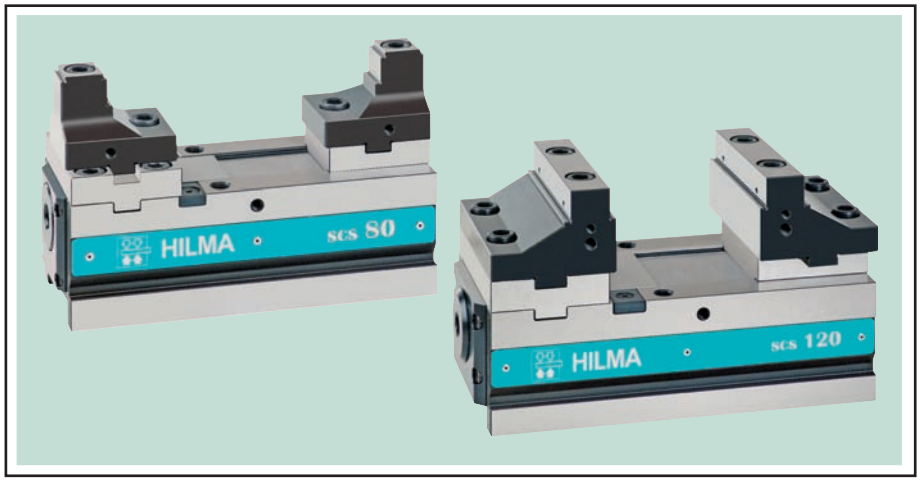

- **High degree of freedom for spindle and tools: low risk of collision**
- **Well suited for short standard tools**
- **Repeatable and controllable clamping forces of up to 5600 lbs/SCS 80 and 9000 lbs/SCS 120**
- **Jaw with a special grip for maximum holding force (factor 3 as compared with standard jaw)**
- **Affordable price; large range of accessories**

DESCRIPTION: New machining technologies and manufacturing methods call for the development of new solutions in the field of clamping technology.

The SCS Super Compact Clamp, with its short base and easy movement of the fixed jaw, is ideally suited for 5-side machining.

The well balanced design of the guide between the base and the movable jaw is very important for the use of very high clamping jaws, which are essential for performing machining operations close to the workpiece.

The base is made from special cast steel which guarantees high rigidity and dimensional stability. All sides are hardened and ground, providing a reliable basis for meeting the exacting demands for maximum precision.

For more information, please visit Swiftsure's online catalog at clrh.com under Power Vises, or contact engineering.

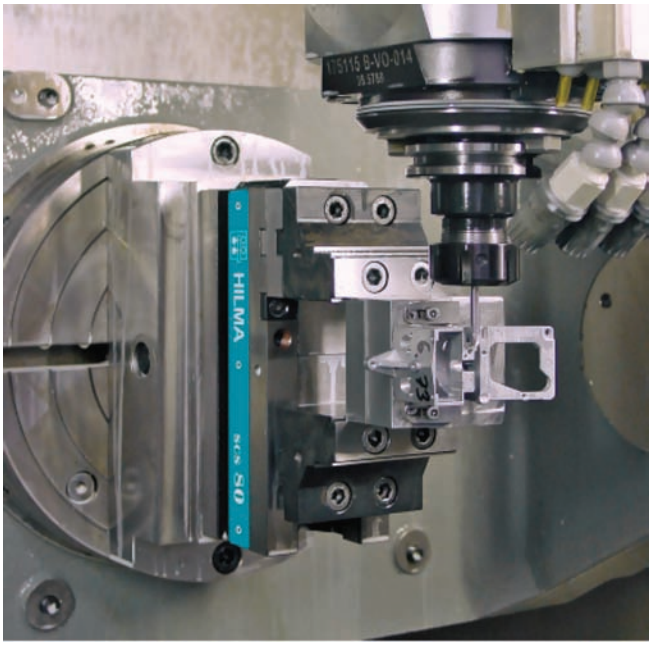

SCS 80
5600 Lbs Clamp Force

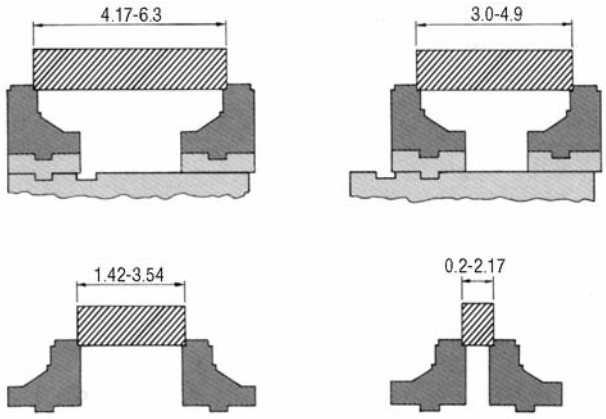

SCS 120
9000 Lbs Clamp Force

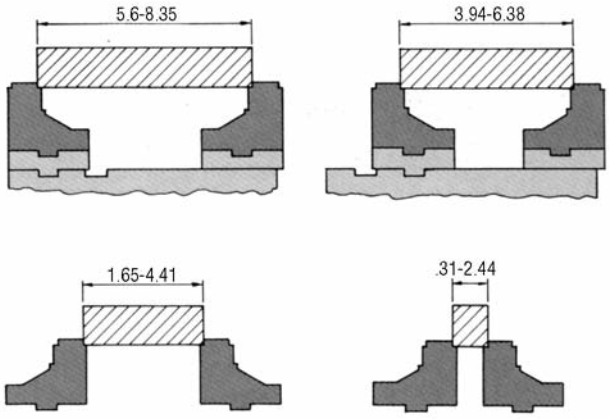

SWIFTSURE®

CARR LANE ROEMHELD MFG. CO.

16345 Westwoods Business Park Dr., Ellisville, MO 63021 www.clrh.com
Engineering Phone 1-800-827-2526, Phone (636) 386-8022, FAX (636) 386-8034

Mini Clamp Vises

3000 psi max
Mechanical and Hydraulic

MC Series
Manual

MC Series
Hydraulic

MCZ Series
Manual (Concentric)

DESCRIPTION: MC-series Mini Clamp Vises are designed especially for multi-face machining with a single clamping operation. Unique design allows clear tool access to five-out-of-six workpiece sides. Ideal for machining complicated workpieces in a single clamping operation, such as in mold making. Mini-Clamp Vises are small, but have a large holding capacity. Finest-quality construction for excellent rigidity and durability.

OPERATION OF MANUAL VERSION: Turn torque wrench clockwise to clamp, counter-clockwise to unclamp.

OPERATION OF HYDRAULIC VERSION: During initial setup, adjust jaw opening to the workpiece using a socket wrench. When fluid pressure is applied by actuating the external power unit, the sliding jaw moves through its power stroke to apply full clamping force. Unclamping is by positive spring return.

MANUAL VERSION AVAILABLE IN ONE SIZE: 60mm jaw width and a maximum clamping force of 3400 Lbs.

CONCENTRIC VERSION AVAILABLE IN THREE SIZES: (Manual Operation only) Jaw widths of 60mm, 100mm, and 125mm. Clamping forces up to 7800 lbs for largest size.

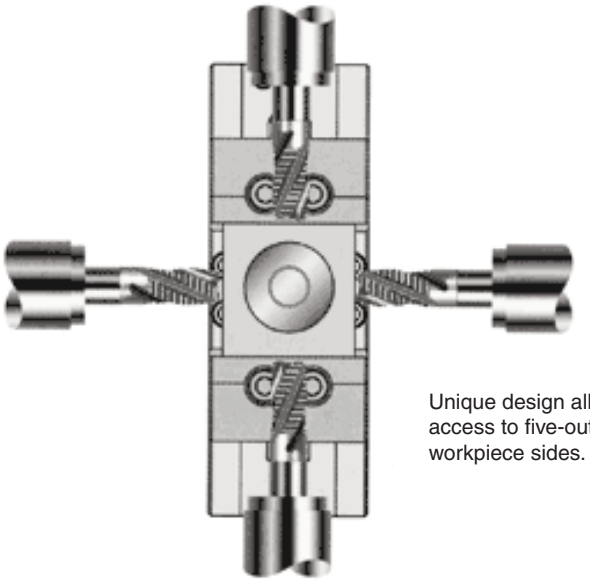

Unique design allows clear tool access to five-out-of-six workpiece sides.

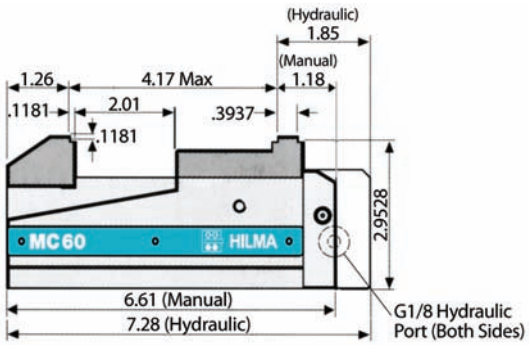

Standard (MC 60)

MC Series

Operation	Manual	Hydraulic
Jaw Width	MC 60	MC 60
	2.362"	2.362"
Max. clamping force (lbs)	3400	3400
Max. clamping torque required (ft-lbs)	19	—
Power stroke	—	.157
Max. operating pressure (psi)	—	3800
Weight without jaws (lbs)	7.3	8.4
Part no., Vise	**CLRH-9-3583-0101-VS**	**CLRH-9-3583-0201-VS**

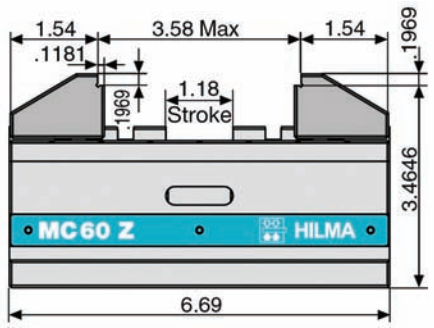

Concentric (MC 60 Z)

MC-Z Series - Concentric

Operation	Manual	Manual	Manual
Jaw Width	MC 60 Z	MC 100 Z	MC 125 Z
	2.362"	3.937"	4.921"
Max. clamping force (lbs)	3400	5600	7800
Max. clamping torque required (ft-lbs)	37	59	148
Clamp stroke	1.18	2.87	2.937
Weight without jaws (lbs)	8.4	39.3	108
A (max.)	3.58	10.2	15.7
B	6.69	12.6	18.31
C	3.465	4.922	6.3
Part No., Vise	**CLRH-9-3583-0301-VS**	**CLRH-9-3585-0301-VS**	**CLRH-9-3586-0301-VS**

40mm version available upon request.

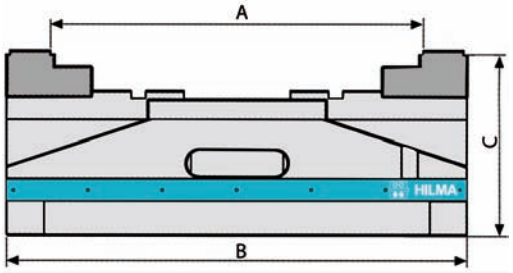

Concentric (MC 100 Z and MC 125 Z)

Vises shown with optional jaws sold seperately. Mounting by clamping claws or threaded holes in the bottom of vise. Contact engineering for hole pattern.

Vise Accessories

Accessory Type	Part No., MC 60 Series	Part No., MC 60 Z Series	Part No., MC 100 Z Series	Part No., MC 125 Z Series
Hardened Step Jaw, Fixed	CLRH-9-3583-6002-VSA	—	—	—
Hardened Step Jaw, Mobile	CLRH-9-3583-6001-VSA	CLRH-9-3583-6006-VSA	CLRH-9-3585-6001-VSA	CLRH-9-3586-6001-VSA
Machinable Step Jaw, Fixed	CLRH-9-3583-6009-VSA	—	—	—
Machinable Step Jaw, Mobile	CLRH-9-3583-6008-VSA	CLRH-9-3583-6010-VSA	CLRH-9-3585-6006-VSA	—
Torque Wrench	CLRH-9-3583-7010-VSA	CLRH-9-3583-7010-VSA	CLRH-9-3792-6610-VSA	—
Clamping Claws (4 set) M10 Screws	CLRH-9-3583-7001-VSA	CLRH-9-3583-7001-VSA	—	—
Clamping Claws (4 set) M12 Screws	CLRH-9-3583-7002-VSA	CLRH-9-3583-7002-VSA	CLRH-9-3585-7001-VSA	—
Socket Nut	CLRH-1-3124-0104-VSA	CLRH-1-3124-0021-VSA	CLRH-1-3124-0020-VSA	—
Adaptor Bolt to Speedy Nipple	CLRH-5-1028-0043-VSA			

Collet Vises

3750 psi max
Single acting

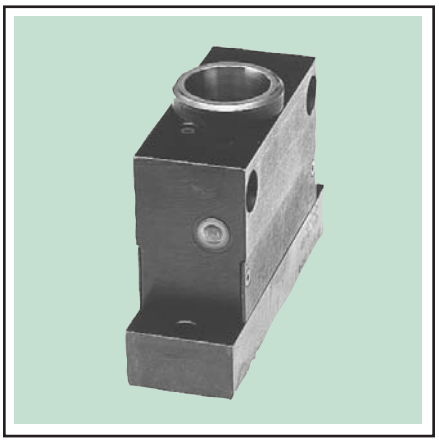

Single Collet

- **Accurate and versatile fixture for round, square, and hex-shaped workpieces**
- **Uses standard 5C collets, including step collets for large diameters, expanding collets for ID clamping, and emergency collets for special shapes**
- **Mounts vertically or horizontally**
- **Advanced workpiece-release mechanism for flawless operation**
- **Two models available . . . either one or three collets**
- **Height adjustment assembly removable for through feeding**
- **Do not use NPT fittings**

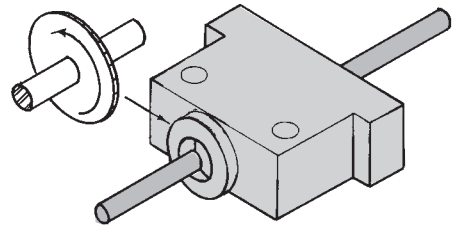

Adjustment-screw plug removes easily for bar feeding.

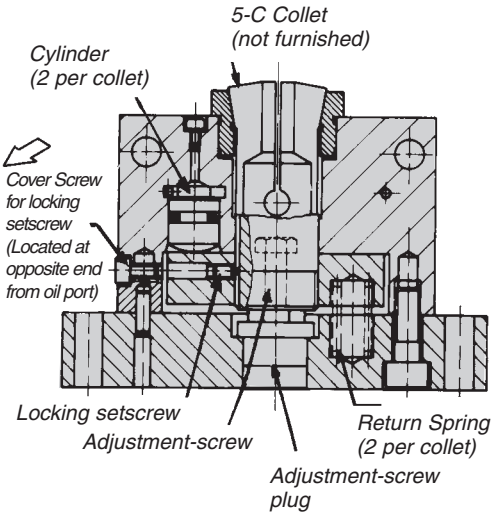

CLAMPING ACTION: When fluid pressure is applied, twin cylinders push to draw each tapered collet slightly downward while the body remains stationary. This locates each workpiece solidly against an adjustable bottom rest, and clamps it securely by closing the collet. Unit unclamps by a positive spring return, combined with an advanced release principle that insures workpieces will release flawlessly every time.

ACCURACY: Far better accuracy and repeatability than competitive collet vises. Workpiece is pulled solidly against the bottom stop for excellent height repeatability. Collet squareness is accurate to within ±.001 inches.

RELEASE MECHANISM: Collets are held by an advanced design collar. This design makes it impossible for the collet to stick in its cavity during unclamping, guaranteeing quick and positive collet opening. Unlike competitive collet vises, this unit never requires the operator to strike it with a hammer to unclamp.

MOUNTING AND SETUP: Fasten to machine using the mounting holes provided. Units mount either vertically or horizontally. Male 37° fluid connection (note 3750 psi maximum operating pressure). Adjust workpiece height using the adjustment screw inside each collet cavity. After screwing collets into unit, tighten locking setscrews to prevent rotation (remove cover screw first). To keep unit absolutely sealed from dirt during machining, we recommend sealing the slits in each collet face with elastic sealant.

CONSTRUCTION: Carbon steel body. Bottom plugs holding the workpiece-height-adjustment screws can be removed for through feeding barstock.

ACCESSORIES: A three-prong collet wrench is available for easy collet insertion and adjustment (part no. CLR-100-VSA). Collets are not included.

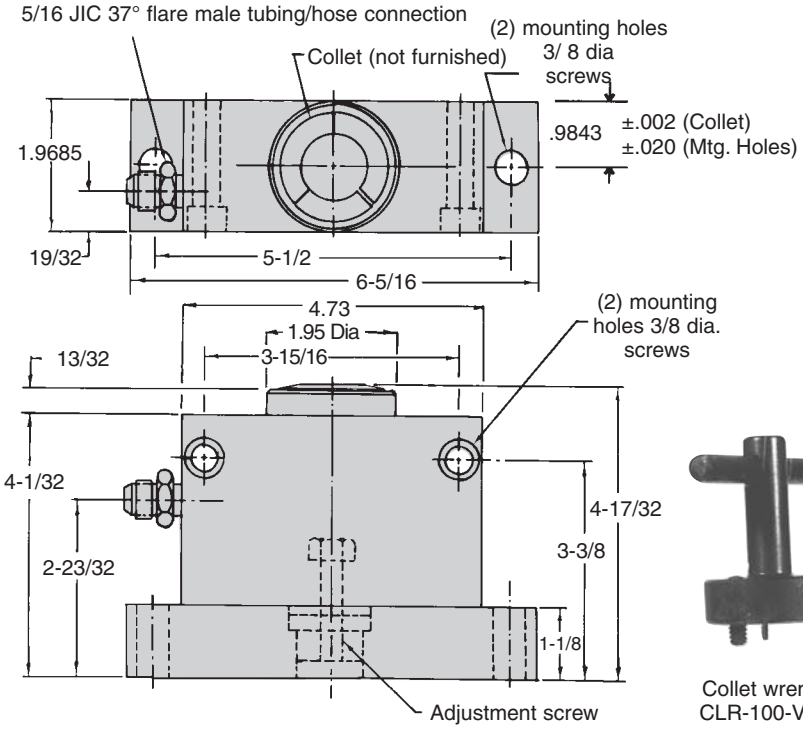

Single Collet vises may be combined to facilitate machining many parts simultaneously.

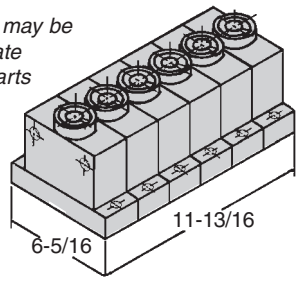

Collet wrench
CLR-100-VSA

Radial clamping force per collet at 3750 psi	**19100** Lbs
Fluid required (cu. in.)	.08
Total piston area (sq. in.)	.974
Force per 1000 psi (lbs)	5093
Max. operating pressure (psi)	3750
Weight (lbs)	9.5
Part No.	**CLR-4604-715-VS**

SWIFTSURE®

CARR LANE ROEMHELD MFG. CO.

Sales—Phone (314) 647-6200 Fax (314) 647-5736
Engineering—Phone 1-800-827-2526 Fax (636) 386-8034

Collet Vises

3750 psi max
Single acting

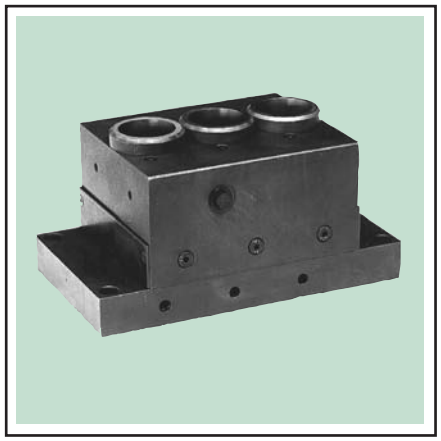

- **Accurate and versatile fixture for round, square, and hex-shaped workpieces**
- **Uses standard 5C collets, including step collets for large diameters, expanding collets for ID clamping, and emergency collets for special shapes**
- **Mounts vertically or horizontally**
- **Advanced workpiece-release mechanism for flawless operation**
- **Two models available . . . either one or three collets**
- **Height adjustment assembly removable for through feeding**

****Do not use NPT fittings**

CLAMPING ACTION: When fluid pressure is applied, twin cylinders push to draw each tapered collet slightly downward while the body remains stationary. This locates each workpiece solidly against an adjustable bottom rest, and clamps it securely by closing the collet. Unit unclamps by a positive spring return, combined with an advanced release principle that insures workpieces will release flawlessly every time.

ACCURACY: Far better accuracy and repeatability than competitive collet vises. Workpiece is pulled solidly against the bottom stop for excellent height repeatability. Collet spacing and squareness are accurate to within ±.002 inches.

RELEASE MECHANISM: Collets are held by an advanced design collar. This design makes it impossible for the collet to stick in its cavity during unclamping, guaranteeing quick and positive collet opening. Unlike competitive collet vises, this unit never requires the operator to strike it with a hammer to unclamp.

MOUNTING AND SETUP: Units mount either vertically or horizontally. Locate on a modular tooling plate or block with one Round Pin (CL-MF40-4501) and one Diamond Pin (CL-MF40-4601). Fasten with four socket-head cap screws. To mount directly on a machine table, use two Sure-Lock Fixture Keys (instead of the Round Pin and Diamond Pin) to fit the table slot. Male 37° fluid connection (note 3750 psi maximum operating pressure). Adjust workpiece height using the adjustment screw inside each collet cavity. After screwing collets into unit, tighten locking setscrews to prevent rotation (remove cover screw first). To keep unit absolutely sealed from dirt during machining, we recommend sealing the slits in each collet face with elastic sealant.

CONSTRUCTION: Carbon steel body. Bottom plugs holding the workpiece-height-adjustment screws can be removed for through feeding barstock.

ACCESSORIES: A three-prong collet wrench is available for easy collet insertion and adjustment (part no. CLR-100-VSA). Collets are not included.

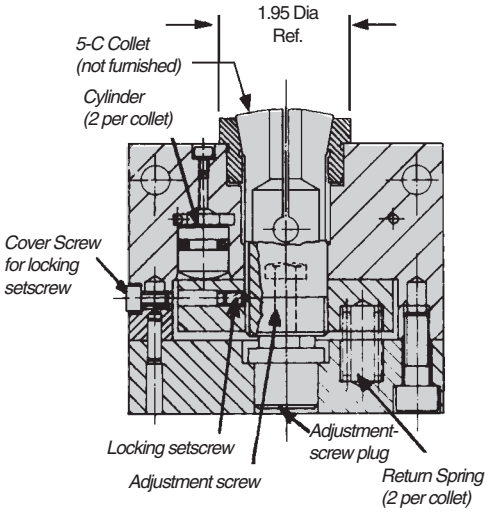

Triple Collet

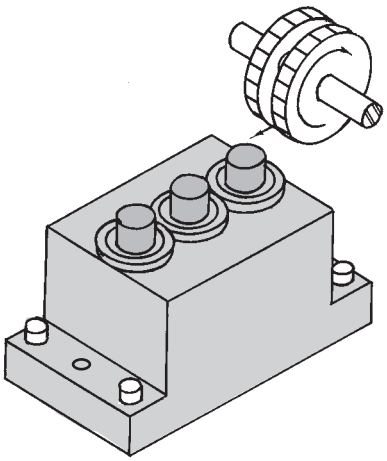

A quick, accurate milling fixture for most round, square and hex-shaped parts.

NEW DESIGN FOR MOUNTING ON MODULAR TOOLING PLATES AND BLOCKS!

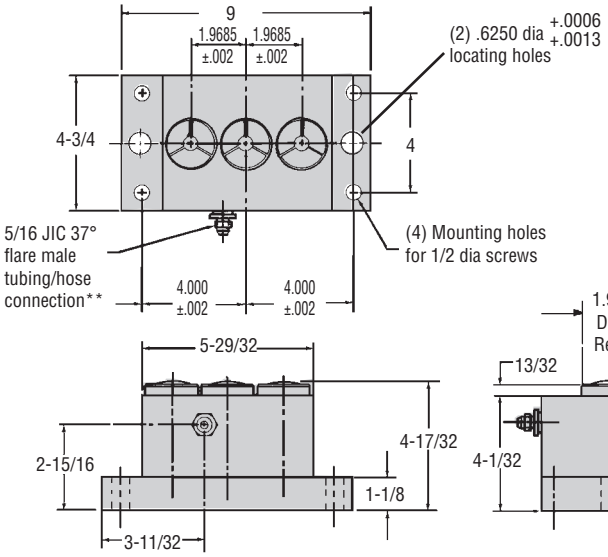

Compact Triple Collet Vises are easily mounted in multiples.

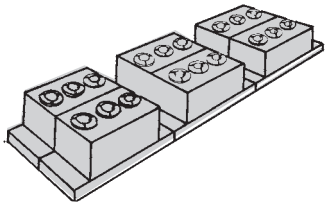

Radial clamping force per collet at 3750 psi	**19100** Lbs
Fluid required (cu. in.)	.24
Total piston area (sq. in.)	2.922
Force per 1000 psi (lbs)	5093
Max. operating pressure (psi)	3750
Weight (lbs)	29
Part No.	**CLR-4604-716-VS**

CARR LANE ROEMHELD MFG. CO.
Sales—Phone (314) 647-6200 Fax (314) 647-5736
Engineering—Phone 1-800-827-2526 Fax (636) 386-8034

Power Sources

Electric Power Units

pages 74, 76-77

Best power source for most uses. Complete, compact, quiet, and fully automatic. Include pump, reservoir, switches, valves, gauge, and numerous safety devices. Extremely long life. Enough fluid capacity for virtually any fixture. Up to 7500 psi output pressures. 120, 220, or 440 volt.

Air Power Units

pages 79-80.1

Ideal for smaller hydraulic clamping and assembly fixtures with single or double-acting hydraulic elements. Ordinary shop air is all that is required to drive these units.

Economical power source, driven by shop air pressure, includes pump, reservoir, valves, gauges, air filter, muffler, and air extractor/dryer. Very quiet. Ideal for hazardous locations. Enough fluid capacity for virtually any fixture. Up to 7500 psi output pressure.

Hand Pumps

pages 81-82

Manual power source for moderate-size factors. Compact and portable. Ideal for sensitive test fixtures. Choice of hand or foot operation.

Screw Pumps

page 83

Small enough to mount directly on fixture. Operate manually or with a power torque wrench. Ideal for rotary index tables and palletized fixtures where a feed line is impractical.

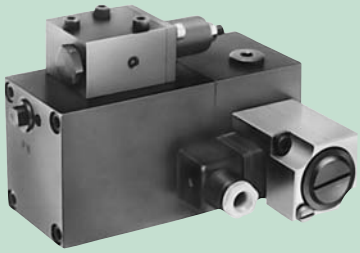

Hydraulic Intensifiers

See Website

Converts hydraulic pressure on the input to a higher pressure on the output. This enables the use of the comparatively low pressure of machine tool hydraulic systems to pressurize hydraulic clamping fixtures with 4 times increase of the input pressure.

Electric Power Units

7500/5000 psi max
Single and double acting

- **Complete power unit with electrical and hydraulic controls**
- **Totally enclosed fan cooled single and three phase universal motors**
- **Thermal overload relay with automatic reset when normal conditions return**
- **Remote clamp-unclamp push button switch(s)**
- **Pressure adjustable from 1500 to maximum**
- **Quiet long life radial piston pump**
- **Filler breather with inlet screen**
- **Leak free fittings and poppet valves**

SETUP AND OPERATION: Connect to fused electrical supply, fill with clean, approved hydraulic fluid and connect to fixture. Mount push button clamping switch near the operator (two furnished with shuttle machine units). Push one button to clamp and unclamp.

OPERATING PRINCIPLES: The heart of the unit is a precision, long-life radial-piston pump controlled upon pressure demand by the integral pressure switch. This switch is adjustable, to give you precise and repeatable clamping forces. Automatic pressure control is assured, because the pump restarts if pressure drops. Clamping pressure is assured even with an electrical power failure since the solenoid valves are mechanically held in the clamped position - and only need power to unclamp. The poppet design of these valves means positive, leakage-free sealing.

Standard

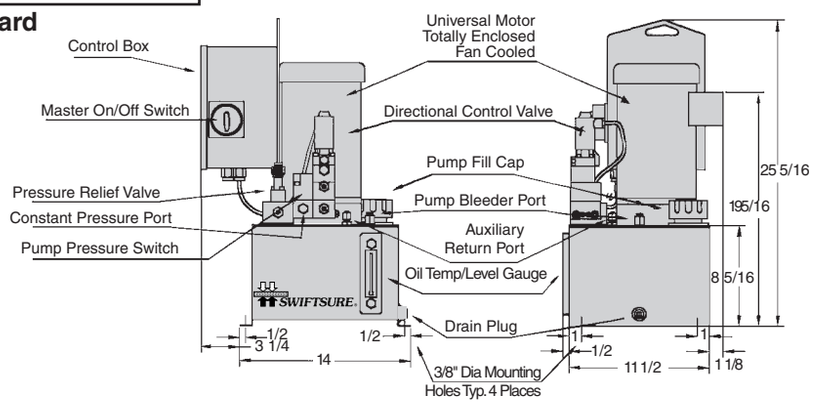

Adjustable operating pressure	1160-7500		725-5075		725-5075	
Power supply	460 volts 3 Phase 60Hz	230 volts 3 Phase 60Hz	230 volts 1 Phase 60Hz	115 volts 1 Phase 60Hz	460 volts 3 Phase 60Hz	230 volts 3 Phase 60Hz
Flow rate (cu.in/min)	66	66	66	66	106	106
Usable fluid capacity (cu.in)	400	400	400	400	400	400
Reservoir capacity (cu.in.)	690	690	690	690	690	690
Motor horsepower	1.5	1.5	1.0	1.0	1.5	1.5
Motor amperage	2.1	4.2	6.4	12.8	2.1	4.2
Noise level @ 3 ft.(dBA)	75	75	75	75	75	75
Max. uninterrupted running time (sec.)	15-120	15-120	15-120	15-120	15-120	15-120
Max. % of cycle pump should operate	25-40%	25-40%	25-40%	25-40%	25-40%	25-40%
Weight (lbs.)	110	110	110	110	110	110
Part No. Basic Pump (No Controls or Valves)	**CLR-9301-EP**	**CLR-8301-EP**	**CLR-93011-EP**	**CLR-83011-EP**	**CLR-9302-EP**	**CLR-8302-EP**
Part No. Single Acting System	**CLR-931-EP**	**CLR-831-EP**	**CLR-9321-EP**	**CLR-8321-EP**	**CLR-932-EP**	**CLR-832-EP**
Part No. Double Acting System	**CLR-933-EP**	**CLR-833-EP**	**CLR-9341-EP**	**CLR-8341-EP**	**CLR-934-EP**	**CLR-834-EP**
2 Independent S/A systems (shuttle machining)	**CLR-935-EP**	**CLR-835-EP**	**CLR-9361-EP**	**CLR-8361-EP**	**CLR-936-EP**	**CLR-836-EP**
2 Independent D/A systems (shuttle machining)	**CLR-937-EP**	**CLR-837-EP**	**CLR-9381-EP**	**CLR-8381-EP**	**CLR-938-EP**	**CLR-838-EP**
Manual Decoupling System Double Acting	**CLR-939-EP**	**CLR-839-EP**	**CLR-9401-EP**	**CLR-8401-EP**	**CLR-940-EP**	**CLR-840-EP**
Auto Decoupling System S/A Customer control	**CLR-941-EP**	**CLR-841-EP**	**CLR-9421-EP**	**CLR-8421-EP**	**CLR-942-EP**	**CLR-842-EP**
Auto Decoupling System D/A Customer control	**CLR-943-EP**	**CLR-843-EP**	**CLR-9441-EP**	**CLR-8441-EP**	**CLR-944-EP**	**CLR-844-EP**

All Pump Systems contain Controls and Valve packages ready to go. No add on packages required.
Fluid Recommendations see p.120
SPECIALS AVAILABLE, CONSULT ENGINEERING 1-800-827-2526

CONTROL OPTIONS: Electric Power Units are offered with three standard hydraulic/ electrical-control options: (1) Single acting, (2) Double acting, (3) Single acting for two independent fixtures.

The following hydraulic-circuit diagram shows a single-acting unit.

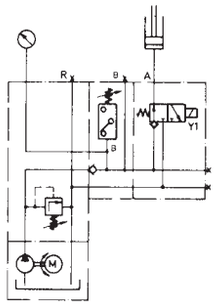

The diagram below shows a double-acting unit. Double-acting units can be used as single acting units simply by capping the return pressure connection, with a CLR-501-F cap fitting.

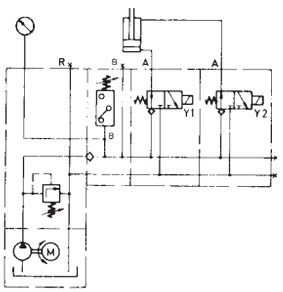

The third diagram shows a single-acting unit for two independent fixtures (shuttle machining). These units have separate clamping switches and valves for each fixture.

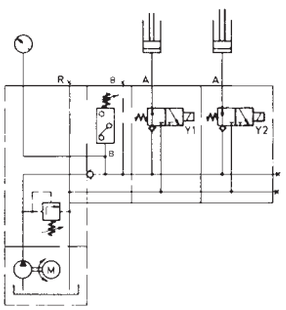

SAFETY FEATURES: Fail-safe operation in case of electrical-power failure since the solenoid-operated clamping valves are de-energized in "clamped" position. These valves are poppet type, so they provide tight zero leakage sealing. Units are also equipped with fluid-level and fluid-temperature sensors to protect power units from abuse. If fluid level drops below a minimum level or fluid temperature exceeds 140° F, the unit shuts off and lights an LED. When fluid is replenished or temperature drops, the unit resets itself automatically.

MOUNTING: Mount unit upright, preferably above fixture level to keep unit clean. We offer an attractive, economical power-unit stand (below) that bolts to the floor. For mounting directly on machine-tool tables, we offer a vibration-proof mount (also below).

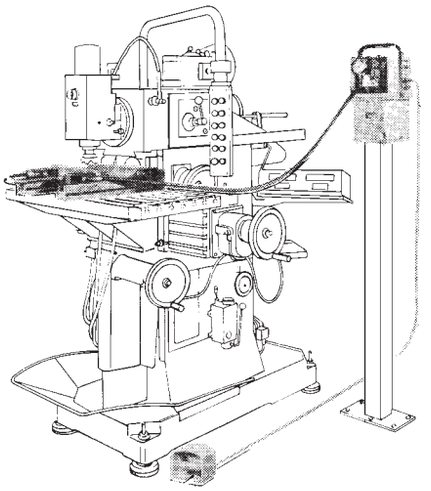

Power Unit Stand
CLR-3532-168-PUA

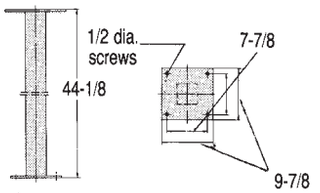

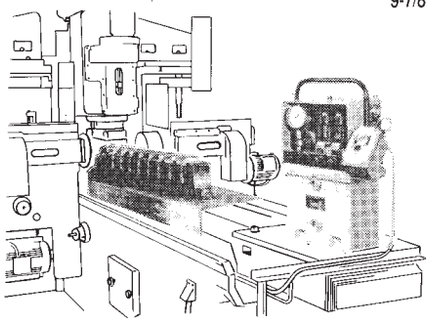

Vibration-proof mount
CLR-3141-308-PUA

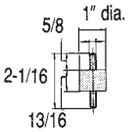

Units can also be mounted on the machine tool using an angle bracket. The photo below shows an overhead traverse bar for convenient hose arrangement. Push-button switches are installed within the operator's reach.

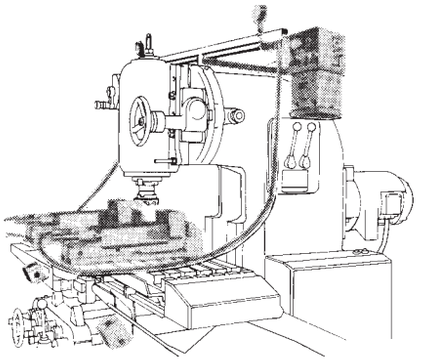

PRESSURE SETTING: Set system pressure by adjusting the setting screw (5) on the unit's pressure switch (4) in combination with the knurled knob (3) on the unit's pressure-relief valve (1). Basically, the pressure switch establishes the minimum system pressure (10% drop below setting) and the pressure-relief valve establishes the maximum in case of over pressurization.

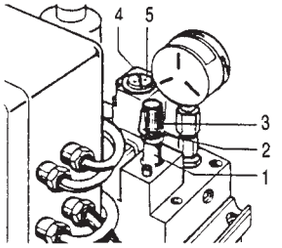

DUTY CYCLE: Electric Power Units are designed specifically and purely for workholding, with intermittent clamping and unclamping between machining cycles (not continuous running). For most workholding applications, actual running time is a small percentage of total cycle time. The graph below shows typical pump-pressure buildup during a machining cycle.

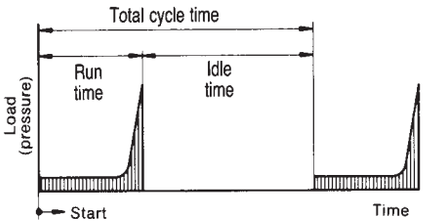

Run time must be less than 40% of total cycle time with maximum fluid level, 25% with minimum fluid level (7500-psi units). Run time must also be less than 120 seconds with maximum fluid level, 15 seconds with minimum fluid level (7500-psi units). Otherwise the fluid will overheat and the unit will shut off automatically.

Connection Examples

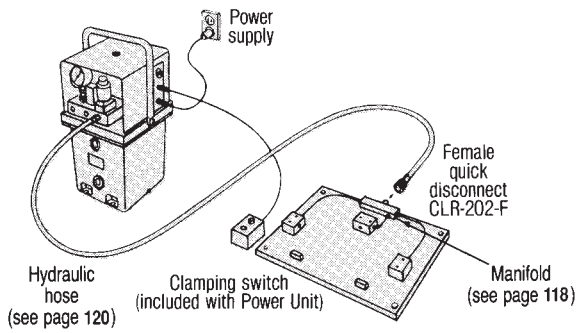

Single Fixture
Single Acting
(use any Electric Power Unit)

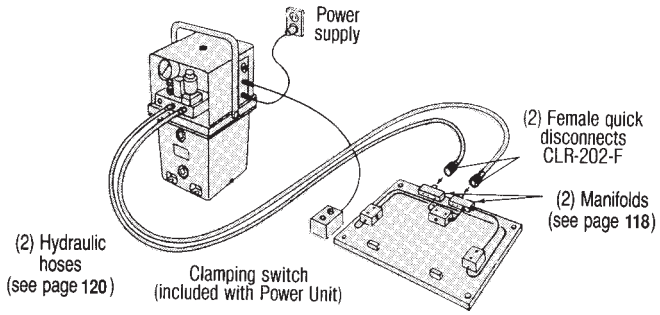

Single Fixture
Double Acting
(use CLR-933-EP or CLR-833-EP)

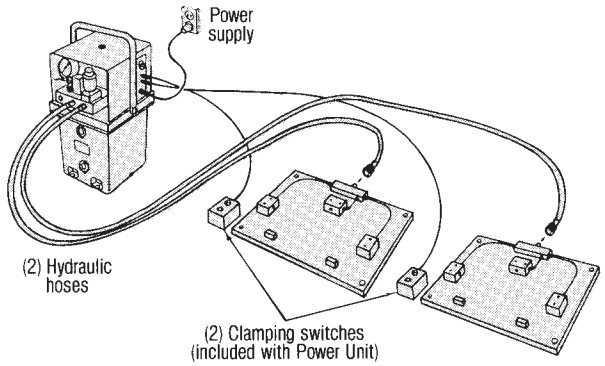

Two Fixtures
Single Acting
(use CLR-935-EP or CLR-835-EP)

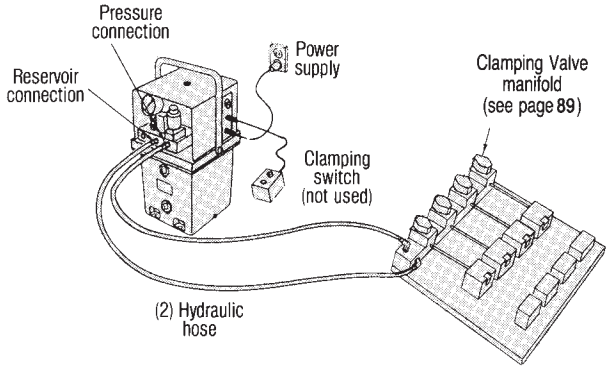

Multiple Parts Clamped Independently
Single Acting or Double Acting
(use any Electric Power Unit)

CARR LANE ROEMHELD MFG. CO.
Sales—Phone (314) 647-6200 Fax (314) 647-5736
Engineering—Phone 1-800-827-2526 Fax (636) 386-8034

Air Power Units

7500 psi max
Single and double acting

- **Economical and self-contained. . .just fill with fluid**
- **Up to 7500 psi from shop air pressure (only 70-psi air pressure required)**
- **Tandem, reciprocating pump automatically restarts to maintain system pressure**
- **Holds pressure even if air supply fails**
- **Safe in hazardous locations**
- **Complete turnkey unit includes clamping valve, filter/regulator/lubricator, air and hydraulic pressure gauges, muffler, and air extractor/dryer**

**** Do not use NPT fittings**

OPERATION: Unit is ready to run after you fill the reservoir with fluid (order separately, page 120) and connect it to an air supply. Adjust the input air pressure, using the unit's air regulator, to adjust output fluid pressure (2200 to 7500-psi range). Only 70-psi air pressure is required to provide 7500-psi fluid pressure.

FLOW CONTROL: When using these power units in small circuits containing a Swing Clamp, Extending Clamp, or fluid-advanced Work Support, a simple flow control valve may be necessary. If clamps do not cycle properly, install flow control valve (part no. CLR-541-V, page 98) anywhere along the fluid lines to control flow to any or all workholding components.

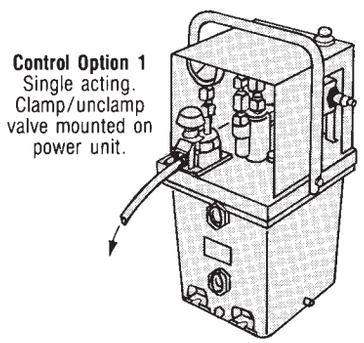

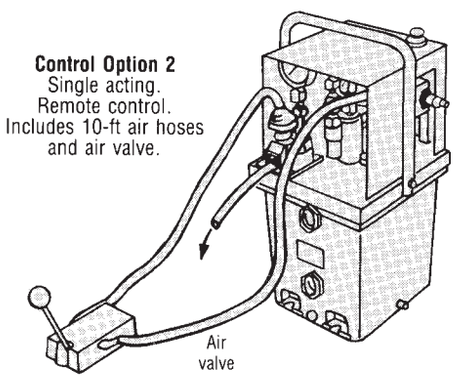

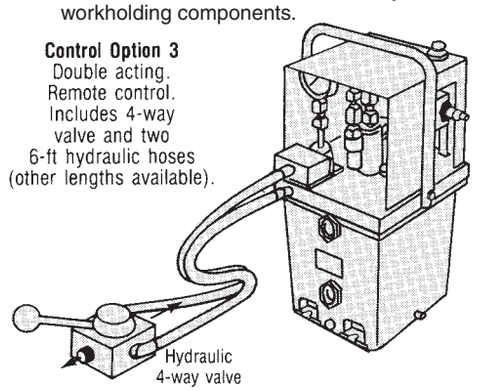

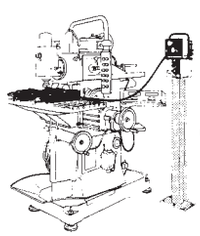

Power Unit Stand
CLR-3532-168-PUA
(see page 76 for dimensions)

Input Air Pressure (psi)	Output Fluid Pressure (psi)											
	Free flow		1500		3000		4500		6000		7500	
	Flow Rate cu. in./min.	Input Air Vol. CFM	Flow Rate cu. in./min.	Input Air Vol. CFM	Flow Rate cu. in./min.	Input Air Vol. CFM	Flow Rate cu. in./min.	Input Air Vol. CFM	Flow Rate cu. in./min.	Input Air Vol. CFM	Flow Rate cu. in./min.	Input Air Vol. CFM
30	74	23	46	14	8	4	—	—	—	—	—	—
40	82	29	62	22	35	13	—	—	—	—	—	—
50	88	37	69	30	50	20	24	10	—	—	—	—
60	91	43	75	36	60	28	38	18	8	5	—	—
70 and higher	94	48	80	42	68	35	50	27	27	15	5	3

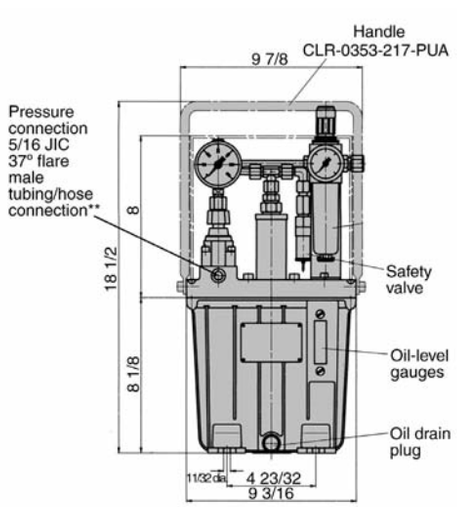

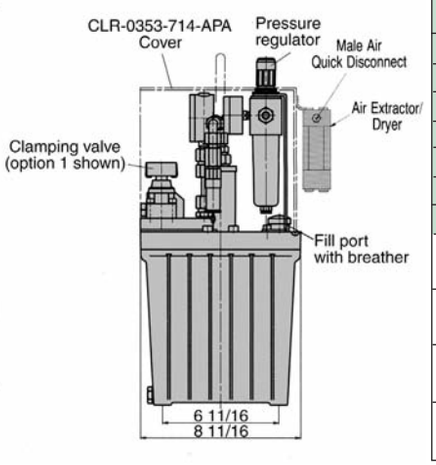

Operating pressure range	1450-7500 psi
Intensification Ratio	108:1
Flow Rate (cu. in./min.)	see table
Min. input air pressure (psi)	14.5
Usable fluid capacity (cu. in.)	150
Reservoir capacity (cu. in.)	260
Noise level at 3 ft. (dBA)	76
Weight (lbs)	50
Part No. Control option 1	**CLR-100-AP**
Part No. Control option 2	**CLR-102-AP**
Part No. Control option 3	**CLR-105-AP**
Part No. Pump without valves	**CLR-106-AP**

Fluid Recommendations see p.120

Air Power Units

7500 psi max
Single and double acting

Connection Examples

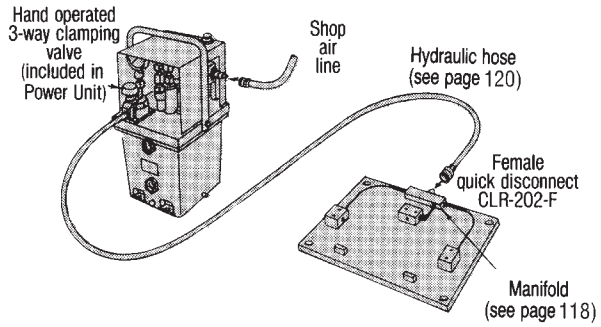

Single Fixture
Valve mounted on unit
Single Acting
CLR-100-AP

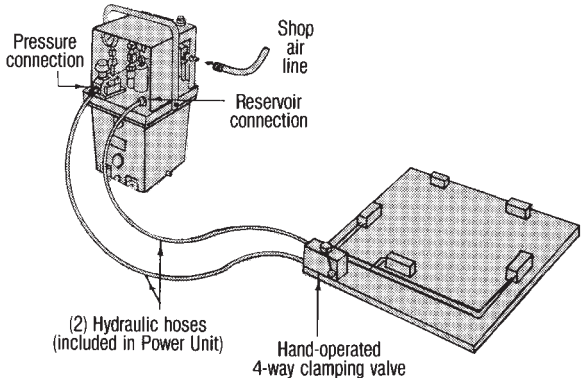

Single Fixture
Double Acting
CLR-103-AP

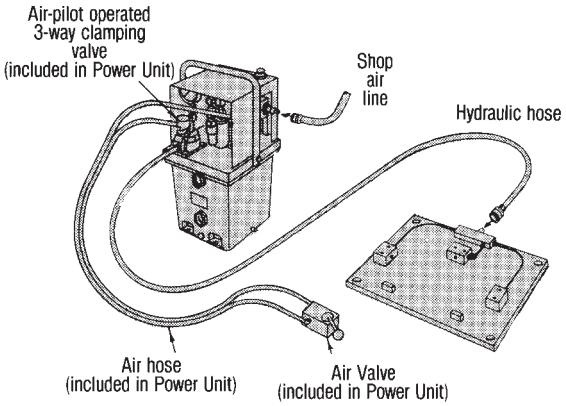

Single Fixture
Remote Valve
Single Acting
CLR-102-AP

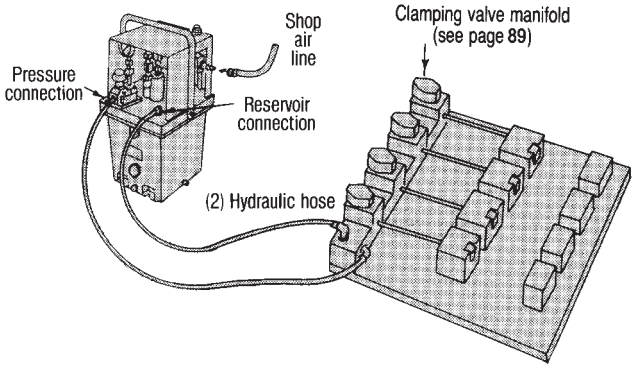

Multiple Parts Clamped Independently
Single Acting or Double Acting
(Use any Air Power Unit)

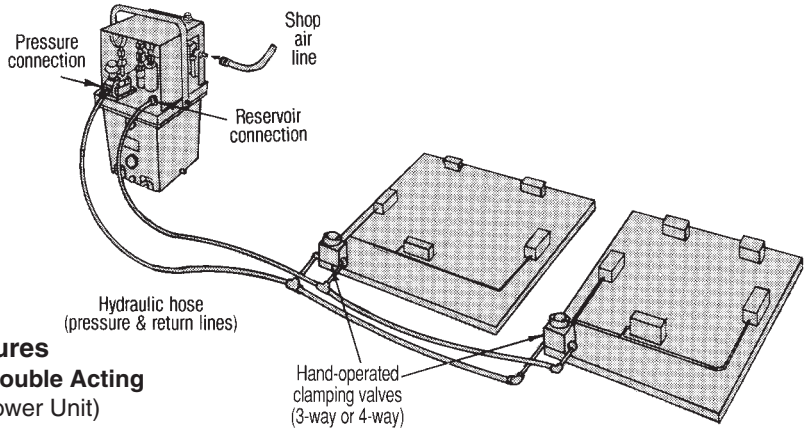

Two Fixtures
Single Acting or Double Acting
(use any Air Power Unit)

Air Power Units

7500 psi max
Single/double acting

- **The hydro-pneumatic pump unit can be operated with oil-free air.**
- **Due to suitable sound insulation only minimum working noises are obtained.**
- **The low starting pressure (40 psi) guarantees a quick start of the pump and short cycle time.**
- **The hydro-pneumatic pump unit is delivered ready for connection**

APPLICATION: The hydro-pneumatic pump unit is particularly suitable for smaller hydraulic clamping and assembly fixtures with single or double-acting hydraulic elements. As the power supplied is compressed air, it can be used without restriction in hazardous surroundings.

OPERATION: **Single acting version** The single-acting hydro-pneumatic pump unit is manually operated. By operating the pedal the fixture will be clamped or unclamped. The pump delivers oil as long as necessary to achieve the desired hydraulic operating pressure. The air pressure is adjusted by a pneumatic service unit and maintained by an integrated check valve.

Double acting version By means of a locking device the pneumatic directional control valve (at the pneumatic side) is permanently in the opened switching position. By means of the mounted hand-operated hydraulic 4/3 directional control valve double-acting cylinders can be controlled. In the case of a pressure loss, the pneumatic pump operates automatically until the desired hydraulic pressure is realized.

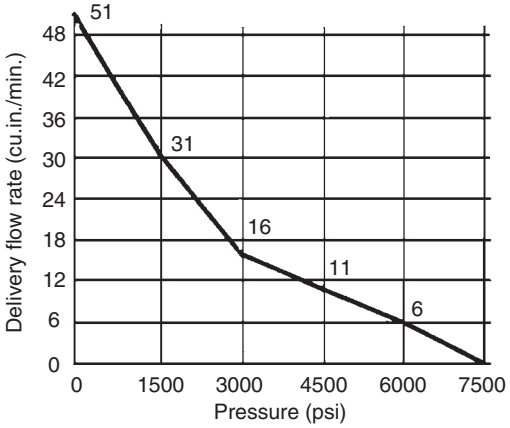

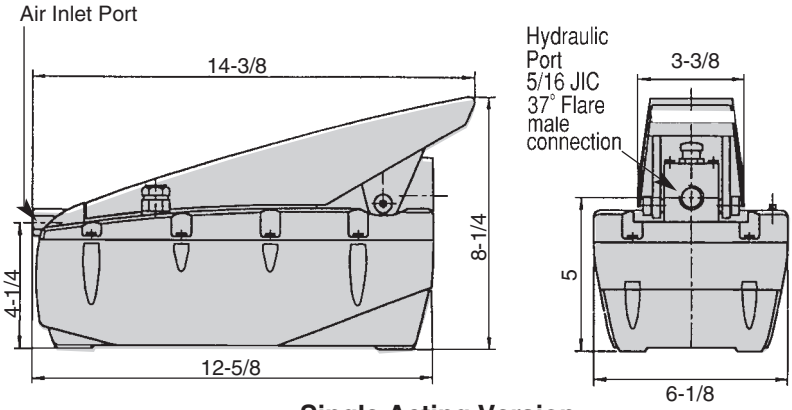

Single Acting Version

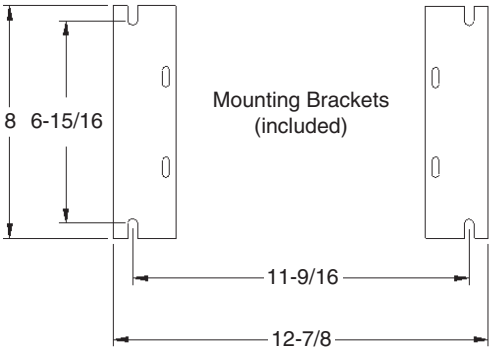

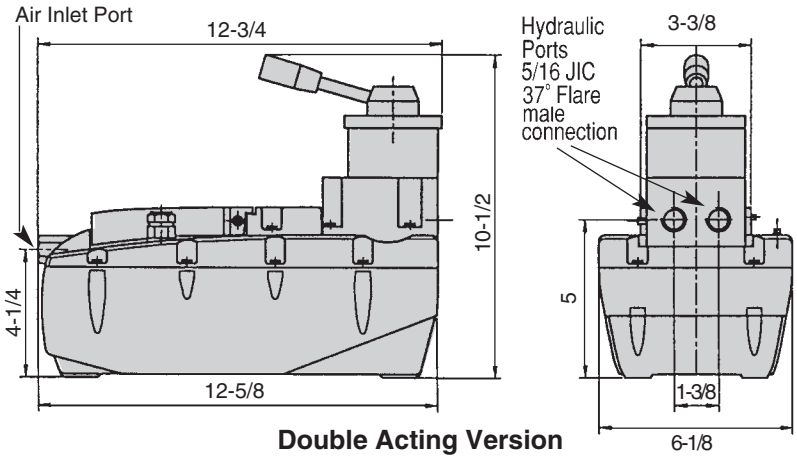

Double Acting Version

Operating Pressure Range	4000-7500 psi
Intensification Ratio	100:1
Flow Rate (cu.in./min.)	see graph
Min. input air pressure (psi)	40
Usable fluid capacity (cu.in.) Horiz/Vert	125/90
Reservoir capacity (cu.in.)Horiz/Vert	150/135
Connecting Threads	
• Oil	G 1/4 BSPP
• Air	1/4 NPT
Weight (lbs)	14
Part No., Single Acting	**CLR-200-AP**
Part No., Double Acting	**CLR-203-AP**
Part No., Pump only- No valves	**CLR-201-AP**

Fluid Recommendations see p.120

SWIFTSURE®
CARR LANE ROEMHELD MFG. CO.
Sales—Phone (314) 647-6200 Fax (314) 647-5736
Engineering—Phone 1-800-827-2526 Fax (636) 386-8034

Hand Pumps

7500/3000 psi max
Single acting

Single Stage

- **Very compact**
- **Pump and release with the same lever**
- **Easily adjustable pressure setting**
- **Choice of hand or foot operation**

**** Do not use NPT fittings**

CLAMPING: Move pump lever downward to pump fluid, through a 40-degree stroke. Lever returns upward by spring force. Repeat until you reach the set pressure and the lever declutches.

UNCLAMPING: Lift pump lever 10 degrees upward against spring force to release clamping force instantly.

CONSTRUCTION: Totally self-contained power source. Virtually wearfree due to metallic seal on pump piston.

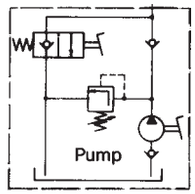

Symbol

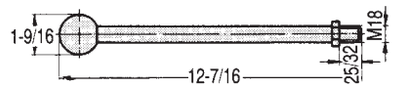

Hand Lever
CLR-003-HPA

Foot Lever
CLR-002-HPA

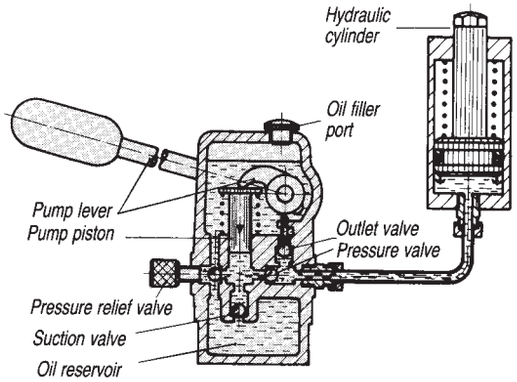

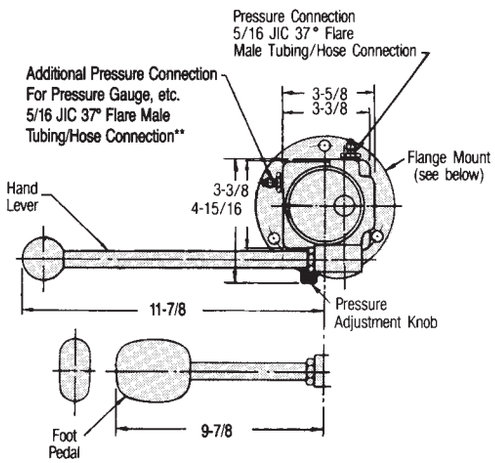

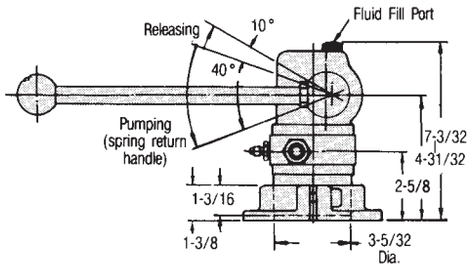

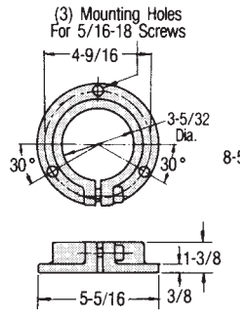

Flange
CLR-303-HPA

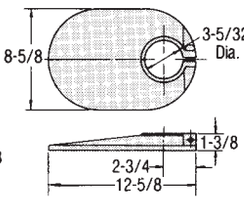

Weighted Base
CLR-301-HPA

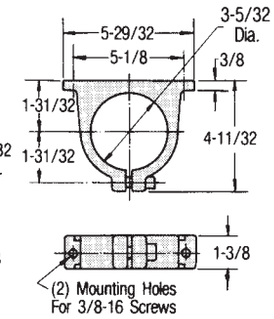

Bracket
CLR-302-HPA

Operating pressure range	0-7500 psi	0-3000 psi
Displacement per stroke (cu.in.)	.12	.24
Usable oil volume (cu.in.)	9	9
Reservoir capacity (cu.in.)	18	18
Relief valve adjustment range (psi)	150-7500	150-3000
Weight (lbs)	16-27	16-27
Part No. with flange and hand lever	**CLR-601-HP**	**CLR-401-HP**
with flange and foot lever	**CLR-602-HP**	**CLR-402-HP**
Part No. with base and hand lever	**CLR-603-HP**	**CLR-403-HP**
with base and foot lever	**CLR-604-HP**	**CLR-404-HP**
Part No. with bracket and hand lever	**CLR-605-HP**	**CLR-405-HP**
with bracket and foot lever	**CLR-606-HP**	**CLR-406-HP**
Part No., pump only	**CLR-600-HP**	**CLR-400-HP**

Fluid Recommendations see p.120

CARR LANE ROEMHELD MFG. CO.
Sales—Phone (314) 647-6200 Fax (314) 647-5736
Engineering—Phone 1-800-827-2526 Fax (636) 386-8034

Hand Pumps

7500 psi max
Single acting

Two Stage

- **Two-stage pump for faster pressurization**
- **Easy pressure adjustment**
- **Automatic switching from low 850-psi stage to high 7500-psi stage**
- **Pump and release with the same lever**

** **Do not use NPT fittings**

CLAMPING: Move pump lever downward to pump fluid, through a 40-degree stroke. Lever returns upward by spring force. Repeat until you reach the set pressure and the lever declutches.

UNCLAMPING: Lift pump lever 10 degrees upward against force to release clamping force instantly.

CONSTRUCTION: Totally self-contained power source. Virtually wearfree due to metallic seal on pump piston.

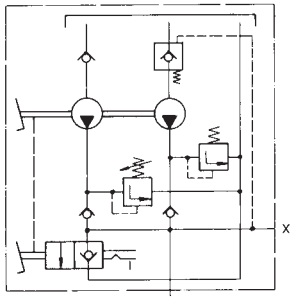

Symbol

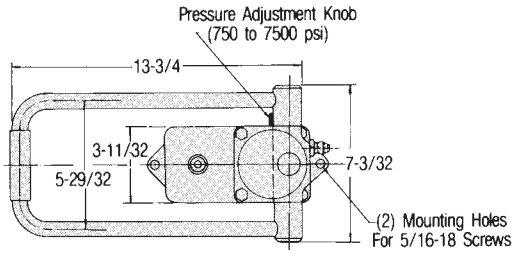

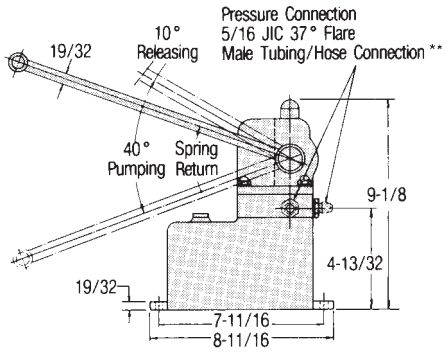

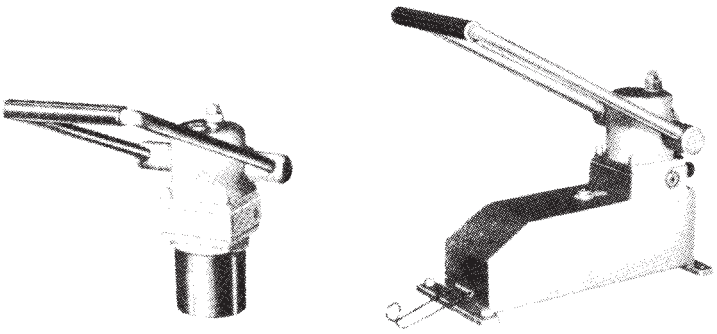

Smaller and larger reservoirs are available. Please contact factory for more information.

Two Stage

Operating pressure range	0-7500 psi
Displacement per stroke up to 900 psi, Low Stage (cu. in.)	.73
Displacement per stroke up to 7500 psi, High Stage (cu. in.)	.15
Usable oil volume (cu. in.)	50
Reservoir capacity (cu. in.)	60
Relief valve adjustment range (psi)	750-7500
Weight (lbs)	30
Part No.	**CLR-702-HP**

CARR LANE ROEMHELD MFG. CO.
Sales—Phone (314) 647-6200 Fax (314) 647-5736
Engineering—Phone 1-800-827-2526 Fax (636) 386-8034

Screw Pumps

7500 psi max
Single acting

Compact block

Cartridge/Manifold mounted

- **Compact pressure source**
- **Ideal for rotary tables or pallets where fluids supply lines are impractical**
- **Excellent for holding pressure while fixture is transferred**
- **Can be used in multiples for more fluid capacity**
- **May be operated with a power torque wrench (non-impact)**
- **7500 psi pressure from 38 ft-lbs torque**

**** Do not use NPT fittings**

DESIGN CONSIDERATIONS:

1. Include a pressure gauge in the system (page 118).
2. All clamps and components must be leak free, so use only SWIFTSURE products.
3. Since fluid capacity is limited, use only on small fixtures. For best results, clamps should use only 65% of total fluid capacity. Due to limited capacity, use only with smallest accumulator CLR-9606-102-PDA.
4. Systems must be bled carefully and designed to avoid air pockets. Include a separate fill plug on the cartridge mounted version, at the highest point in the system.
5. Mount block-type Screw Pump only horizontally with fluid fill port up.
6. For safety on palletized fixtures, use a control cylinder (page 116) with a position sensor on the machine.

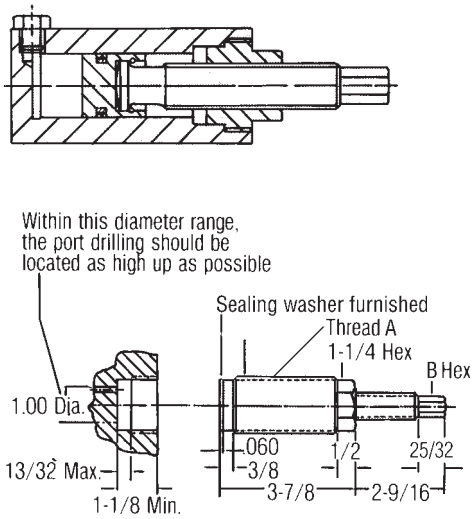

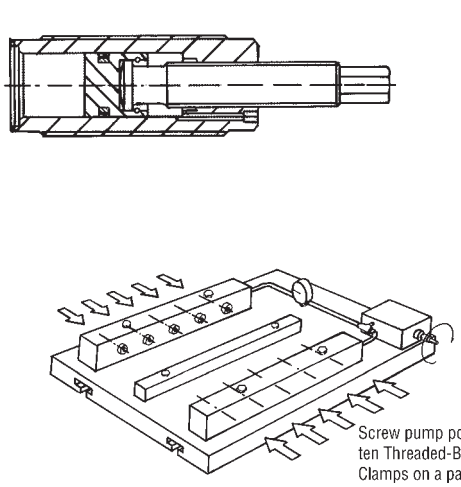

Hole Preparation for manifold mounting

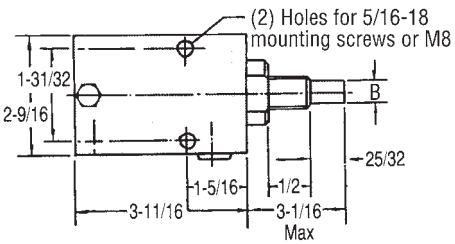

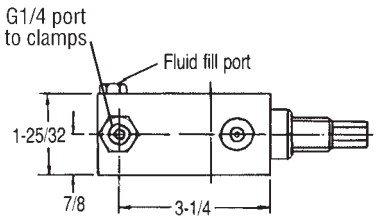

Symbol

Operating Pressure Range	0-7500 psi
Total fluid capacity (cu. in.)	1.28
Fluid displacement per revolution (cu. in.)	.06
Installation torque, manifold mounting (ft. lbs.)	58
Weight (lbs)	4.0

USA

A body thread	1-1/2- 16
B Hex	1/2
Part No., compact block	**CLR-900-SP**
Part No., manifold mounted	**CLR-901-SP**
Part No., sealing washer	**CLR-3000-843-SW**

METRIC

A body thread	M38 x 1.5
B Hex	SW 13
Part No., compact block	**CLR-8819-001-SP**
Part No., manifold mounted	**CLR-8819-101-SP**
Part No., sealing washer	**CLR-3000-843-SW**

CARR LANE ROEMHELD MFG. CO.
Sales—Phone (314) 647-6200 Fax (314) 647-5736
Engineering—Phone 1-800-827-2526 Fax (636) 386-8034

Clamping Valves

For clamping several workpieces from a single power source.

Hand-Operated Single Acting

page 87

Hand-Operated Double Acting

page 87

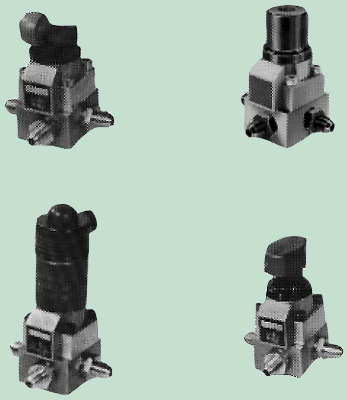

Above styles available in single acting or double acting, page 88.

Valve Manifolds

For clamping several fixtures from a single power source. Options include Pressure Reduction, Pressure Relief, and Pressure Monitoring. Available in single acting, double acting, or combination.

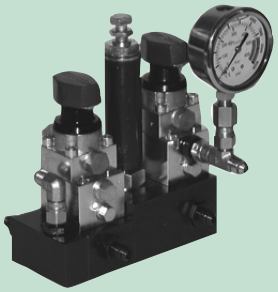

2 Double Acting Hand Valves 1 Reduced

page 89.1

2 Single Acting 24 V Solenoid Valves

page 89.1

Heavy Duty Clamping Valve

See Website

Poppet style clamping valve can be used for single acting or double acting.

CARR LANE ROEMHELD MFG. CO.

Sales—Phone (314) 647-6200 Fax (314) 647-5736
Engineering—Phone 1-800-827-2526 Fax (636) 386-8034

Control Valves

Sequence Valves

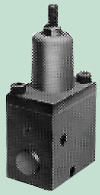

Standard Fittings for Manifold Mount

page 92

For automatic sequencing of locating, clamping, and supporting operations.

pages 92-93

Pressure Control

Pressure Reducing with Relief

See Website

Pressure Reducing

pages 94.2 - 94.3

Pressure Closing

See Website

Pressure Relief

page 97

Shut Off

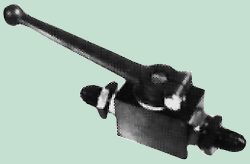

Use to hold pressure in a fixture during machining.

page 97

Flow Control

Use to restrict flow in one direction while allowing free return flow.

page 98

Check Valves

Pilot-Operated

Check valve that permits only one-way flow until released by a pilot fluid line.

pages 95-96

Inline

Allows fluid to flow in only one direction.

page 98

Clamping Valves

7500 psi max
Single or double acting

Hand Operated Single Acting Standard Fittings

Hand Operated Double Acting Standard Fittings

Cam-Roller Single Acting Standard Fittings

11/16 Stroke

Air/Hydraulic Pilot Single Acting Standard Fittings

SINGLE ACTING UNITS

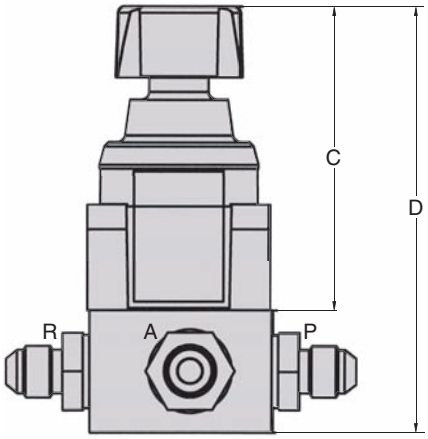

DOUBLE ACTING UNITS

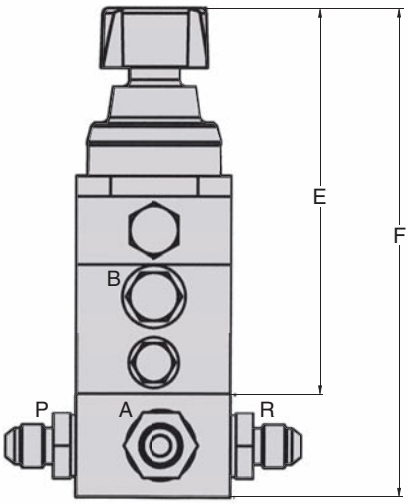

DOUBLE ACTING - STANDARD FITTINGS MOUNTING HOLE PATTERN

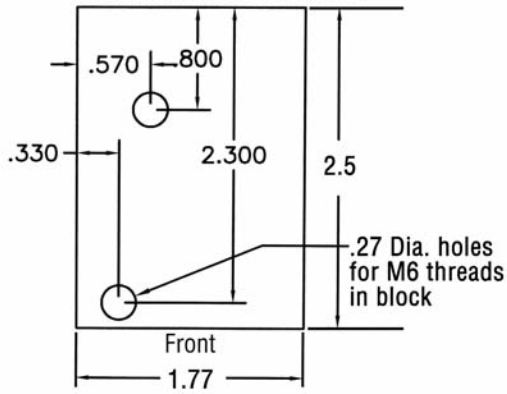

SINGLE ACTING - STANDARD FITTINGS MOUNTING HOLE PATTERN

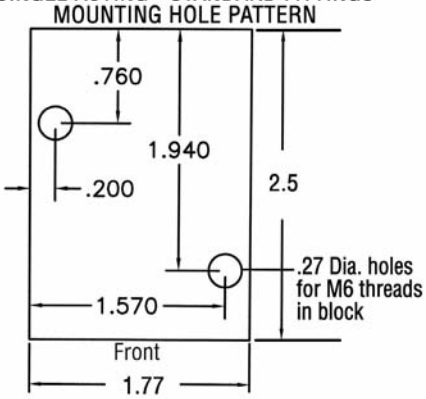

Type	Hand Operated	Cam Operated	Air Pilot	Hydraulic Pilot	24V DC Solenoid
C	4.13	4.34	2.81	2.81	5.63
D	5.63	5.84	4.31	4.31	7.13
E	5.51	5.72	4.19	4.19	7.01
F	7.01	7.22	5.69	5.69	8.51
Single Acting Standard Fittings	**CLR-225-V**	**CLR-415-V**	**CLR-335-V**	**CLR-345-V**	**CLR-645-V**
Single Acting Manifold Mount	**CLR-219-V**	**CLR-411-V**	**CLR-319-V**	**CLR-325-V**	**CLR-629-V**
Double Acting Standard Fittings	**CLR-4220-V**	**CLR-4412-V**	**CLR-4320-V**	**CLR-4326-V**	**CLR-4630-V**
Double Acting Manifold Mount	**CLR-4219-V**	**CLR-4411-V**	**CLR-4319-V**	**CLR-4325-V**	**CLR-4629-V**

CARR LANE ROEMHELD MFG. CO.

Sales—Phone (314) 647-6200 Fax (314) 647-5736
Engineering—Phone 1-800-827-2526 Fax (636) 386-8034

Clamping Valves

7500 psi max
Single or double acting

- **Use to clamp several workpieces independently with a single power source**
- **For single-acting or double-acting clamps**
- **Zero-leakage poppet design with built-in check valve**
- **Extremely compact**
- **All electrical coils are continuous duty rated**

** **Do not use NPT fittings**

Poppet Valves **Spool Valves**

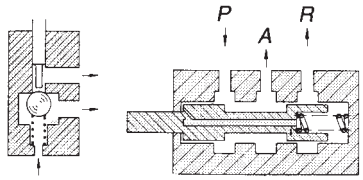

Only SWIFTSURE offers all zero-leakage poppet valves. Others use spool valves, which always have internal leakage due to clearance between the bore and spool.

DESIGN CONSIDERATIONS: Port connections and flow directions must be exactly as shown on the drawings. Otherwise the valves will not function correctly.

P - Pressure into valve from power

R - Return from valve to power source

A - Flow from valve to clamps and back

Use these valves only with the fluid types we recommend, CLR-2-FL or equivalent on page 120. Fluid must be clean (10 micron or better nominal filtration).

SOLENOID OPERATED: Clamp and unclamp automatically using electrical signals from a machine-tool controller. Operate clamps all at once, or individually using one valve per clamp. Stays clamped even if electric power fails, since solenoid is de-energized in the clamped position. 24 Volts DC (+5/-10% allowable voltage deviation). 2000 cycles/hour maximum. 20 watts power consumption. 120, 220, and 440 volt AC valve also available.

DOUBLE ACTING UNITS

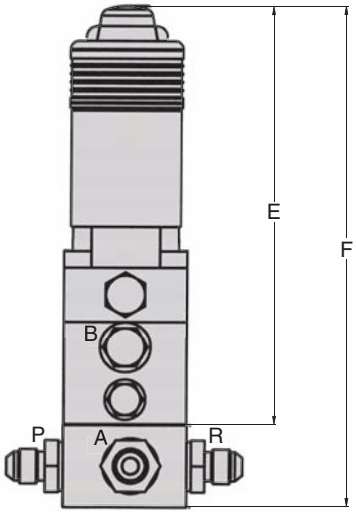

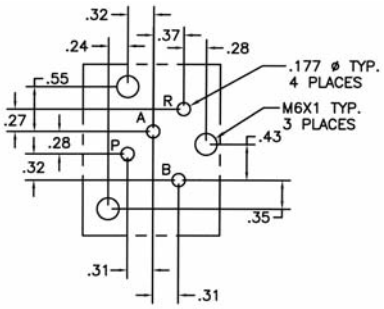

Double Acting

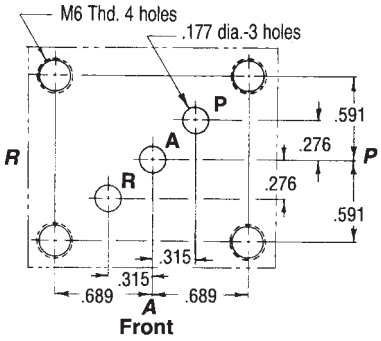

Single Acting

Mounting-hole pattern for manifold mounting. Grind surface flat, 63 RMS max. Order valves without base.

Standard DC Solenoid Valve

Type	Solenoid operated
Max. operating pressure (psi)	7500
Max. inrush draw (watts)	20
Max. flow rate (cu. in./min.)	490
Voltage (+5%/-10%)	24 VDC
Make time (milliseconds)	100
Break time (milliseconds)	50
Max. cycles per hour	2000
Weight (lbs)	1.5
Part No., Single Acting	**CLR-630-V**
Part No., Double Acting	**CLR-4630-V**

Part no.	Type	Normal position (no signal)	Check valve	Symbol
CLR-4630-V	4-way 2-position	N/A	Yes	
CLR-630-V	3-way 2-position	Open	Yes	
CLR-32361-200-V			No	
CLR-32362-300-V		Closed	Yes	
CLR-32362-200-V			No	
CLR-32361-301-V	2-way 2-position	Closed	No	
CLR-32361-302-V		Open	No	

CARR LANE ROEMHELD MFG. CO.
Sales—Phone (314) 647-6200 Fax (314) 647-5736
Engineering—Phone 1-800-827-2526 Fax (636) 386-8034

Clamping-Valve Manifolds (3-Way)

7500 psi max
Single acting

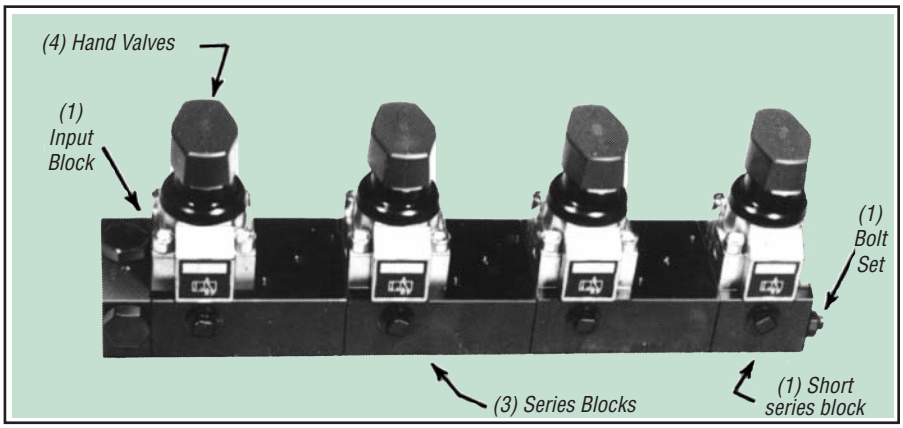

Manifold with Four 3-Way Valves

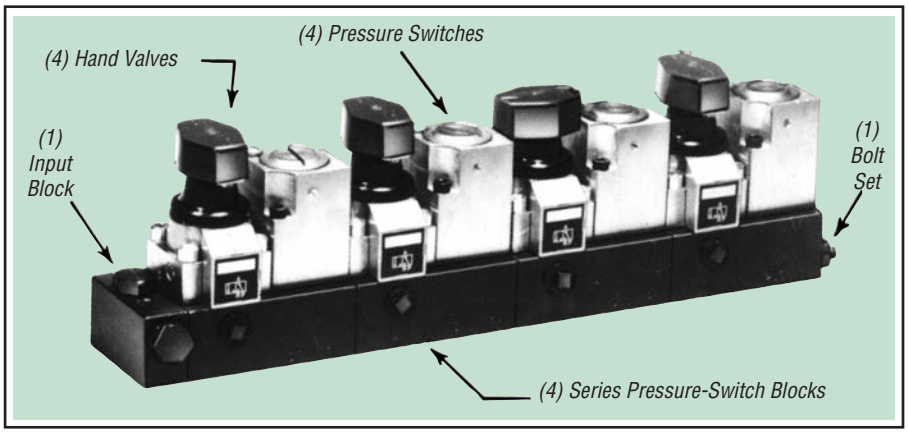

Manifold with Four 3-Way Valves & Pressure Switches

- **Extremely compact valve arrangement for single-acting clamps**
- **Clamp multiple workpieces one at a time, using a single power unit**
- **Choose manual, air-pilot-operated, or solenoid-operated valves**
- **Available with a pressure switch for each clamping circuit...all in one compact assembly**

PRESSURE-SWITCH OPERATION: Pressure Switches are safety devices that signal the presence or absence of fluid pressure electrically, by opening or closing an electrical circuit.

APPLICATIONS:

1. Wire to machine-tool controller to ensure proper clamping pressure before machining starts.
2. To shut-off machine if pressure drops below actuation-differential percentage during the machining cycle.

OPTIONAL GOLD-CONTACT PRESSURE SWITCHES: For gold-contact switches, order part no. CLR-010-PS (without base). These switches offer low-current capability, better for some programmable controllers. They also have a slightly shorter service life.

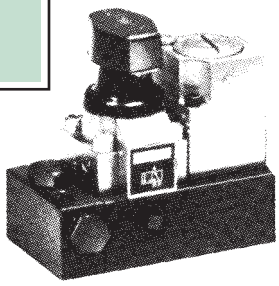

Ordering Example:
Single hand valve & pressure switch.
(1) CLR-219-V
(1) CLR-000-PS
(1) CLR-600-VA
(1) CLR-653-VA
(1) CLR-051-VA

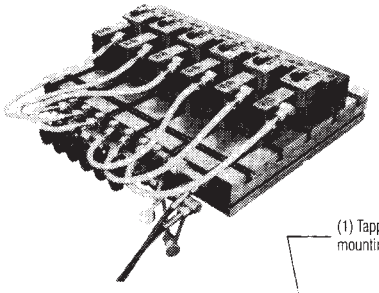

Six workpieces clamped independently using a six-valve manifold mounted on the side of a pallet.

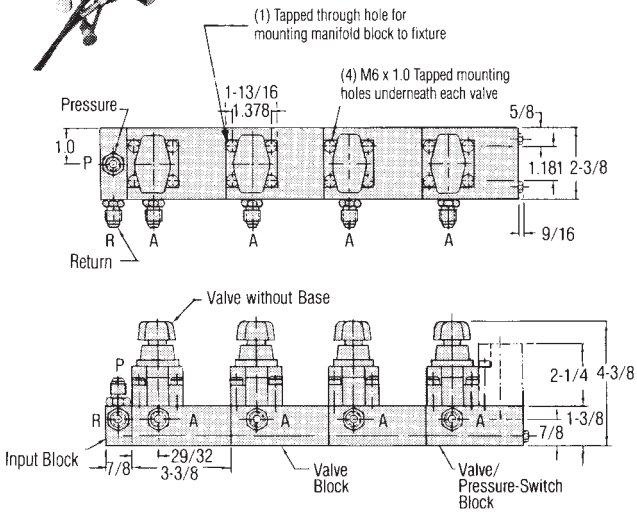

Valve/Pressure Switch Manifold Blocks

Part No., Input Block	CLR-600-VA
Part No., Series Blocks	CLR-691-VA
Part No., Pressure-Switch Blocks	CLR-653-VA
Part No., Bolt Set (2)	CLR-05*-VA

*= number of valves

Short Manifold Blocks

Part No., Input Block	CLR-600-VA
Part No., Short Series Blocks	CLR-650-VA
Part No., Short Bolt Set (2)	CLR-04*-VA

*= number of valves

Valves & Pressure Switches

Part No., Hand Valve without Base	CLR-219-V
Part No., Cam-Roller Valve without Base	CLR-411-V
Part No., Air-Pilot Valve without Base	CLR-319-V
Part No., Solenoid Valve without Base	CLR-629-V
Part No., Blank Cover Block	CLR-461-VA
Part No., Pressure Switch (p.117)	CLR-000-PS

Clamping-Valve Manifolds (4-Way)

7500 psi max
Single and double acting

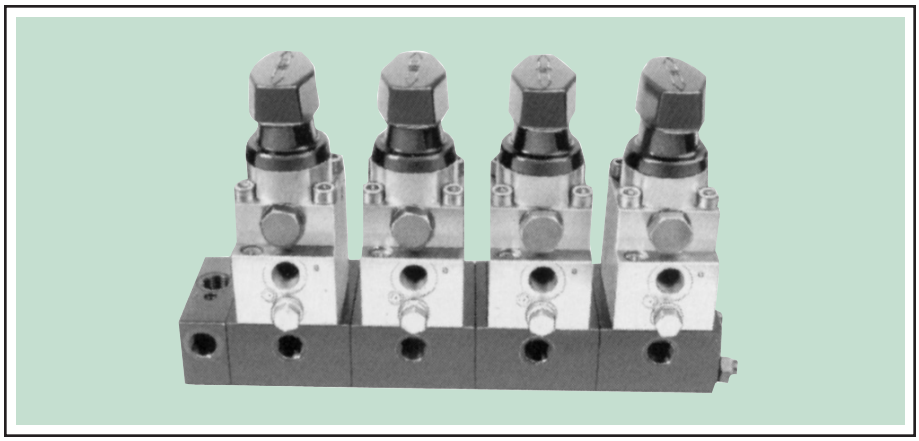

Manifold with Four 4-Way Combination Valves for Double-Acting Clamps

- **Extremely compact valve arrangement for double-acting clamps**
- **Can also be used to operate single-acting clamps**
- **Clamp multiple workpieces independently using a single power unit**

OPERATION: Each clamping circuit is controlled by a combination valve unit that can be used to actuate double-acting cylinders. A 3-way/2-position directional-control valve and a 4-way/2-position directional-control valve are operated simultaneously by turning the knob, so that the double-acting function is obtained. These valve units can also be used for single-acting cylinders by plugging the B port.

MOUNTING: Mount in any position, horizontal or vertical. Fasten manifold using the M6 tapped holes underneath.

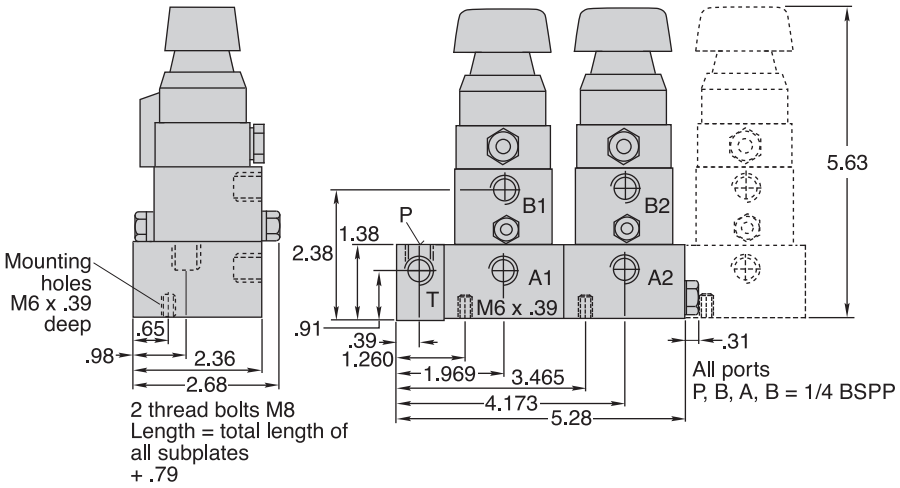

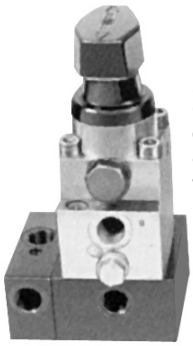

Single unit CLR-2365-001-V can be used as a free-standing 4-way valve.

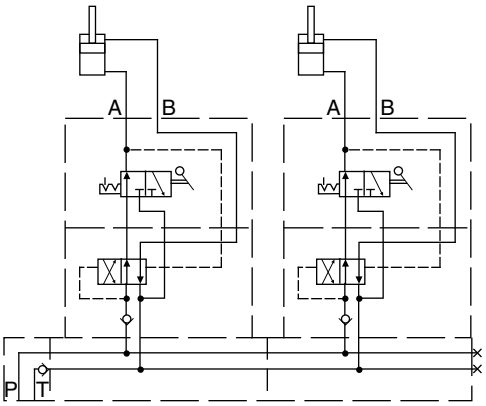

Hydraulic circuit diagram for two clamping circuits.

Type	Hand Operated
Max. operating pressure (psi)	7500
Max. flow rate (cu. in./min.)	490
Weight, per valve unit (lbs)	7.1
Part No., 1 clamping circuit	**CLR-2365-001-V**
Part No., 2 clamping circuits	**CLR-2365-002-V**
Part No., 3 clamping circuits	**CLR-2365-003-V**
Part No., 4 clamping circuits	**CLR-2365-004-V**
Part No., 5 clamping circuits	**CLR-2365-005-V**
Part No., 6 clamping circuits	**CLR-2365-006-V**
Part No., 7 clamping circuits	**CLR-2365-007-V**
Part No., 8 clamping circuits	**CLR-2365-008-V**

Contact Engineering For Other Valve Options

Sequence Valves

7500 psi max

- **Use to automatically sequence positioning, clamping, and supporting**
- **Easily adjustable trigger pressure**
- **Use in multiples for multi-step sequencing (available series mounted…see page 92)**

**** Do not use NPT fittings**

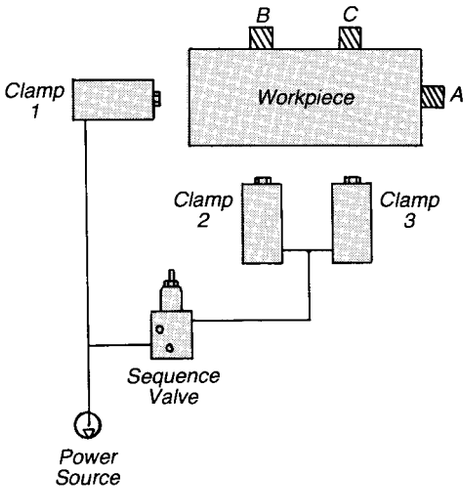

DESIGN CONSIDERATIONS: Choose normal pressure-adjustment-range valves instead of low-range valves whenever possible. Normal range models offer a wider adjustment range, especially when used with an Air Power Unit. For multi-stage sequencing, set trigger pressures in steps of at least 750 psi (normal range) or 375 psi (low range).

STANDARD FITTINGS: Mount in line. Fasten with two #10 cap screws if desired.

MANIFOLD MOUNTING: Fluid enters and exits through two O-ring ports fed by drilled fixture passages. Mount on a ground surface (32 RMSp minimum) using three #10 cap screws.

SERIES MOUNTING: Use one input valve and up to five series valves. Only one pressure connection is required, to the input valves P port. The other valves are connected by an internal passage, sealed with an O-ring between each valve. All required plugs, O-rings, and nuts are furnished.

Example clamping sequence:

Workpiece to be positioned and clamped sequentially. Sequence valve set for 1500 psi trigger pressure.

1. When clamps are actuated, clamp 1 pushes workpiece against stop A.
2. As soon as pressure reaches 1500 psi, sequence valve opens.
3. Clamps 2 and 3 simultaneously push workpiece against stops B and C.
4. Fluid pressure rises uniformly in all clamps.

NOW AVAILABLE MANIFOLD MOUNTED AND SERIES MOUNTED!

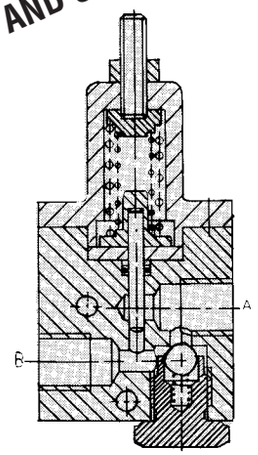

Trigger pressure adjustment range (psi)	Low Range 150 to 2200	Normal Range 1500 to 6500
Max. operating pressure (psi)	7500	7500
Pressure change per turn (psi)	220	440
Maximum flow	490 cu. in./min.	490 cu. in./min.
A Dia.	7/8	1-3/32
B	4-5/16	5-3/4
Weight (lbs)	1.1	1.4

Standard Fittings

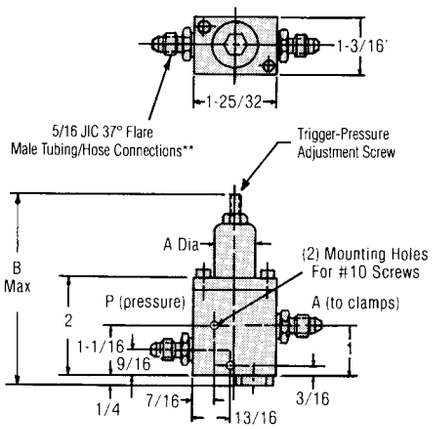

Standard Fittings

Part No.	CLR-420-V	CLR-440-V

Manifold Mounted (p. 92)

Part No.	CLR-429-V	CLR-449-V
Part No., Spare O-Ring	CLR-3000-342-SW	CLR-3000-342-SW

Series Mounted (p. 92)

Part No., Input Valve	CLR-2954-427-V	CLR-2954-441-V
Part No., Series Valve	CLR-2954-428-V	CLR-2954-442-V
Part No., Connecting Bolt, 2 Valves	CLR-3619-029-VA	CLR-3619-029-VA
Part No., Connecting Bolt, 3 Valves	CLR-3619-031-VA	CLR-3619-031-VA
Part No., Connecting Bolt, 4 Valves	CLR-3619-032-VA	CLR-3619-032-VA
Part No., Connecting Bolt, 5 Valves	CLR-3619-033-VA	CLR-3619-033-VA
Part No., Connecting Bolt, 6 Valves	CLR-3619-034-VA	CLR-3619-034-VA

CARR LANE ROEMHELD MFG. CO.

Sales—Phone (314) 647-6200 Fax (314) 647-5736
Engineering—Phone 1-800-827-2526 Fax (636) 386-8034

Sequence Valves

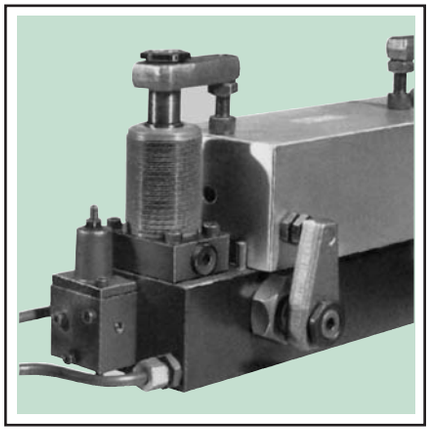

Manifold Mounted

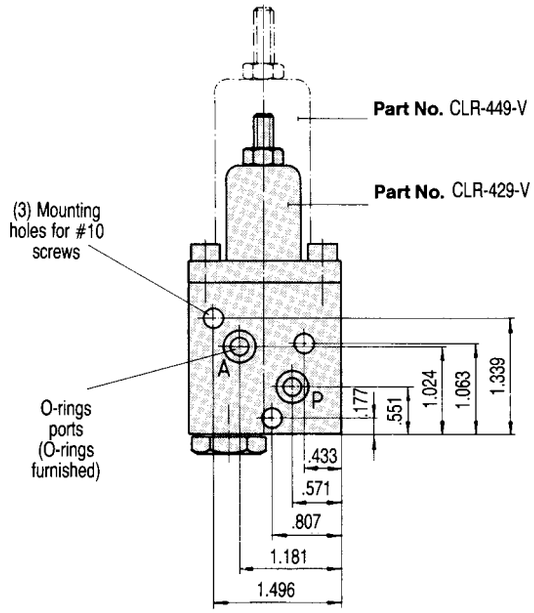

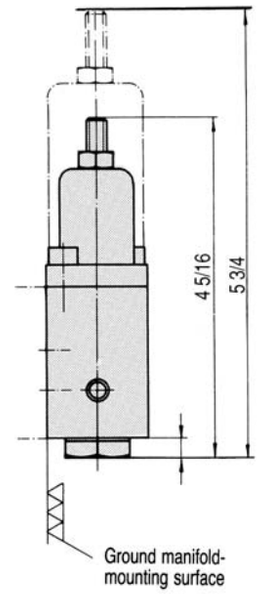

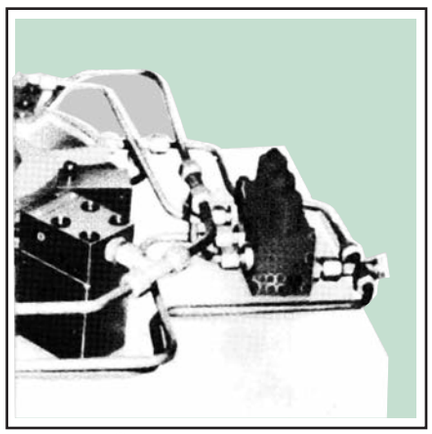

Series Mounted

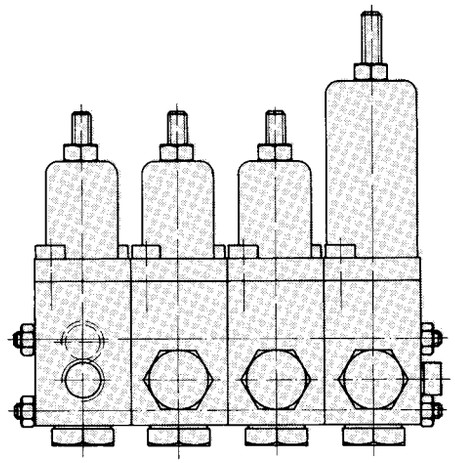

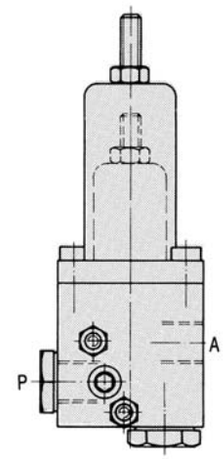

Hydraulic Diagram

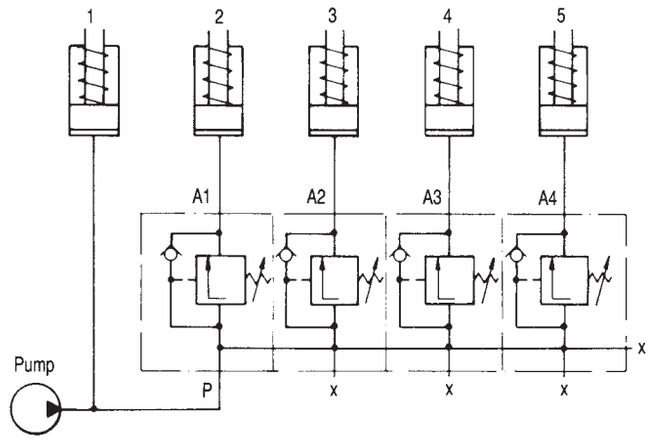

Ordering Example:
Series combination of three low-range sequence valves and one normal-range sequence valve:

(1) CLR-2954-427-V	*Input Valve*
(2) CLR-2954-428-V	*Series Valve*
(1) CLR-2954-442-V	*Series Valve*
(2) CLR-3619-032-VA	*Connecting bolts*

CARR LANE ROEMHELD MFG. CO.
Sales—Phone (314) 647-6200 Fax (314) 647-5736
Engineering—Phone 1-800-827-2526 Fax (636) 386-8034

Pressure-Reducing Valves

7500 psi max

Pipe Connection Type

- **Allows operating a single clamp, or group of clamps, at a lower pressure than the rest of the fixture.**
- **Great new design that can be used on pallet fixtures disconnected from a power source, since no return line is needed**
- **Allows fine tuning of the clamping force for selected components while keeping others at full pressure**
- **Holds reduced pressure to exact setting, regardless of input pressure**
- **Zero leakage poppet design**

OPERATION: Adjust the downstream pressure using the adjusting screw on top of valve. The valve shuts off downstream fluid flow as soon as the system pressure equals the set pressure. As long as the system is connected to the power source, the valve will open again, if additional fluid is required to maintain the downstream pressure. Valve is also ideal for use on palletized (uncoupled) systems.

UNIQUE FEATURES: In normal systems (connected to power source) valve performs as a true pressure reducing valve, and in Palletized (uncoupled) systems as a pressure closing valve.

DESIGN CONSIDERATIONS: When using this valve in series with other valves (clamp/unclamp valves, sequence valves, etc.,) the pressure reducing valve must be the one closet to the clamp(s) that it is protecting. When used in uncoupled systems, it is strongly recommended that a pressure relief valve be included to prevent pressure increases in the downstream (low pressure) side of the system.

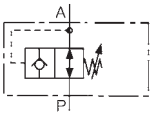

Symbol

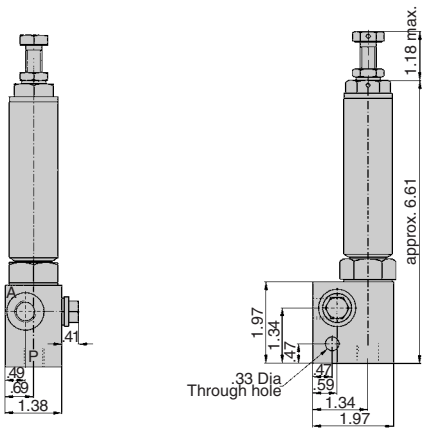

Ports A, P and M = 1/4 BSPP

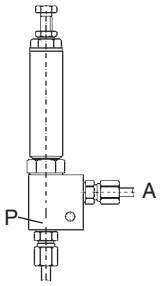

NEW ITEM!

Application example

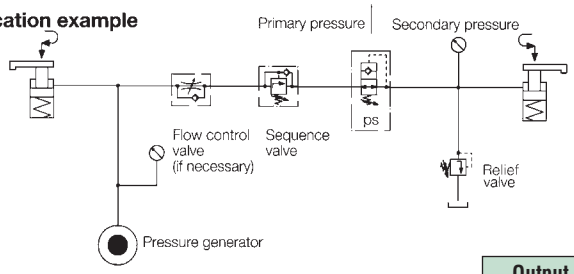

Limit curve of the lowest possible adjusting pressure $P_{A\,min.}$ as a function of the operating pressure P_p

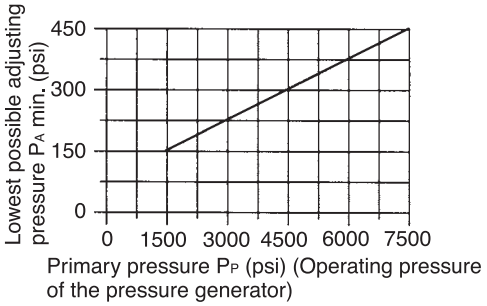

Output pressure setting range (psi)	450 to 5500
Valve Type	Poppet
Max. operating pressure (psi)	7500
Output repeatability (psi)	±75
Max. hysteresis to re-open (psi)	375
Approx. pressure change per rotation (psi)	580
Max. fluid flow rate (cu.in./min.)	600
Range of adjustment (psi)	430-5550
Weight, approx. (lbs)	2.9
Part No.	**CLR-2953-111-V**

SWIFTSURE®

CARR LANE ROEMHELD MFG. CO.

Sales—Phone (314) 647-6200 Fax (314) 647-5736
Engineering—Phone 1-800-827-2526 Fax (636) 386-8034

Pressure-Reducing Valves

7500 psi max

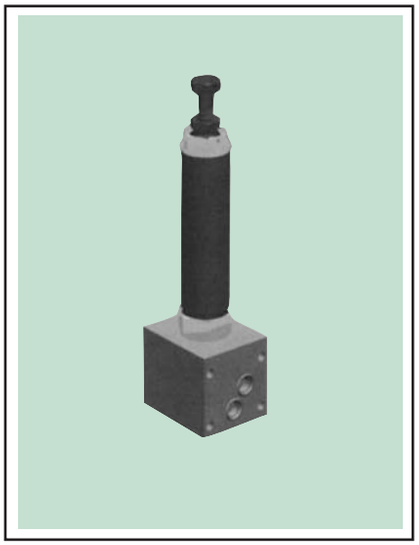

Manifold-Mounted Type

- **Allows operating a single clamp, or group of clamps, at a lower pressure than the rest of the fixture.**
- **Great new design that can be used on pallet fixtures disconnected from a power source, since no return line is needed**
- **Allows fine tuning of the clamping force for selected components while keeping others at full pressure**
- **Holds reduced pressure to exact setting, regardless of input pressure**
- **Zero leakage poppet design**

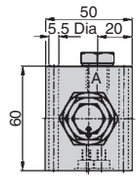

OPERATION: Adjust the downstream pressure using the adjusting screw on top of valve. The valve shuts off downstream fluid flow as soon as the system pressure equals the set pressure. As long as the system is connected to the power source, the valve will open again, if additional fluid is required to maintain the downstream pressure. Valve is also ideal for use on palletized (uncoupled) systems.

UNIQUE FEATURES: In normal systems (connected to power source) valve performs as a true pressure reducing valve, and in Palletized (uncoupled) systems as a pressure closing valve.

DESIGN CONSIDERATIONS: When using this valve in series with other valves (clamp/unclamp valves, sequence valves, etc.,) the pressure reducing valve must be the one closet to the clamp(s) that it is protecting. When used in uncoupled systems, it is strongly recommended that a pressure relief valve be included to prevent pressure increases in the downstream (low pressure) side of the system.

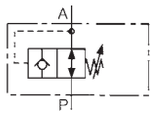

Symbol

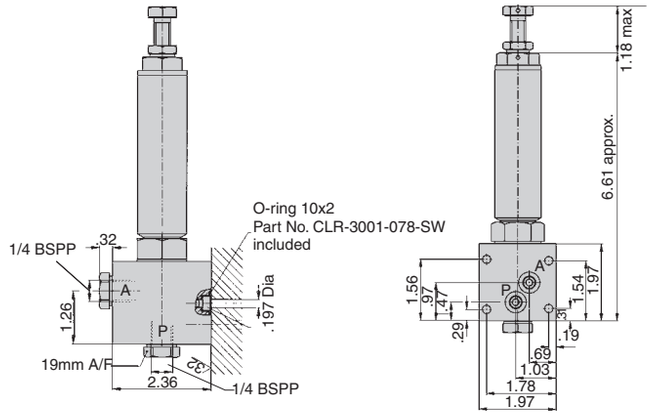

NEW ITEM!

Application example

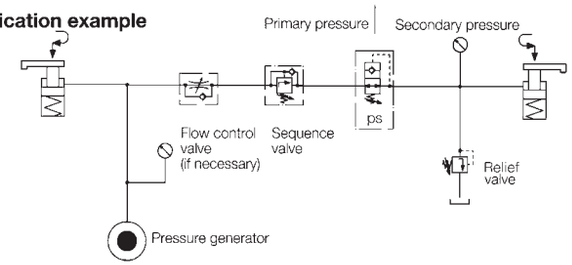

Limit curve of the lowest possible adjusting pressure $P_{A\,min.}$ as a function of the operating pressure P_p

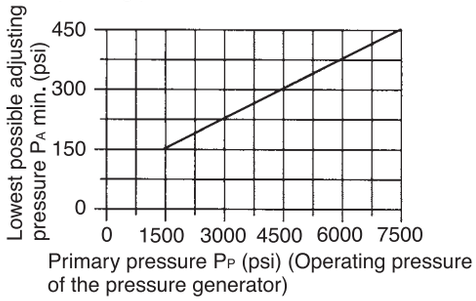

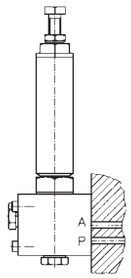

Output pressure setting range (psi)	450 to 5500
Valve Type	Poppet
Max. operating pressure (psi)	7500
Output repeatability (psi)	±75
Max. hysteresis to re-open (psi)	375
Approx. pressure change per rotation (psi)	580
Max. fluid flow rate (cu.in./min.)	600
Range of adjustment (psi)	430-5550
Weight, approx. (lbs)	3.3
Part No.	**CLR-2953-110-V**

Pilot-Operated Check Valves

7500 psi max

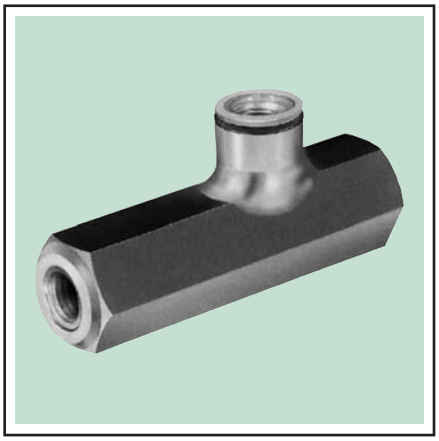

In-Line Mounted

- **Holds clamping pressure until released by a separate pilot pressure line**
- **Allows only one-way flow until released**
- **Excellent safety device if fluid line to fixture may become damaged**
- **May be used to prevent workpieces from floating between opposing clamps**
- **Spring-loaded ball-seat valve (leakage free)**

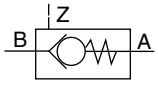

Symbol

OPERATION: The flow from B ➔A is free. The flow from A ➔ B is locked, but can be hydraulically unlocked by pressurizing control port Z.

CONTROL PRESSURE: To unlock the check valve for return flow, control (pilot) pressure must be greater than (0.32 x Pressure_A) + 175 psi for the smaller valve and (0.38 x Pressure_A) + 175 psi for the larger size.

MOUNTING: In-line mounting with tubing connectors. Control port Z is 1/4 BSPP. Ports A & B are 1/4 BSPP on the smaller size, 1/2 BSPP on the larger size. To reduce 1/2 BSPP to 1/4 BSPP, order adaptor CLR-3613-015-F.

DESIGN CONSIDERATIONS: This pilot-operated check valve is not suitable for locking of double-acting swing clamps (pull-type cylinders). Due to the unfavorable surface ratio of these elements, the control pressure is not sufficient for unlocking and dangerous pressure intensification can occur.

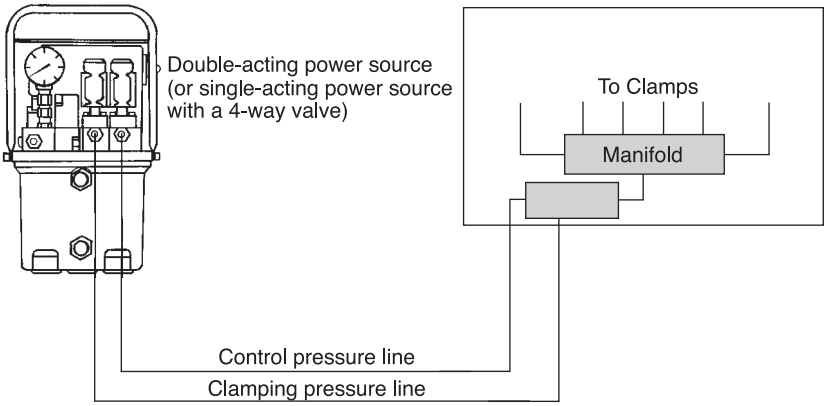

Example 1:

Workpieces remain clamped even if fluid line between power source and fixture becomes damaged.

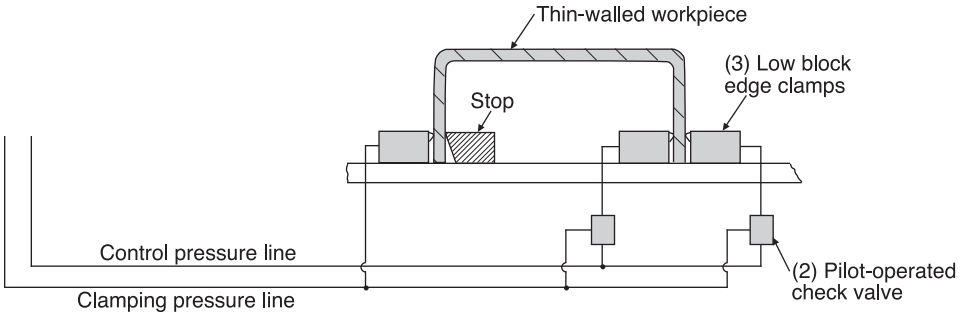

Example 2:

Two opposing clamps (on right side) allow the workpiece to float between them to avoid distorting it. Without check valves, the workpiece would remain unstable since either clamp could retract or extend further by shifting fluid to the other. Check valves lock the clamps in their settled position by allowing only one-way flow.

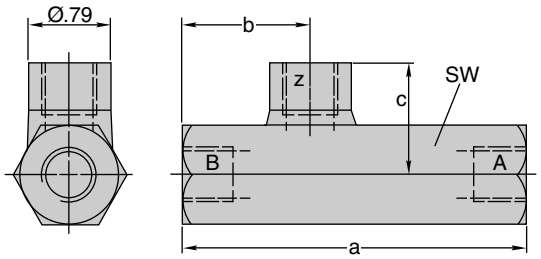

Max. flow rate (cu. in./min.)	920	3360
Max. operating pressure (psi)	7500	7500
Control fluid volume (cu. in.)	.01	.02
Port size, A & B	1/4 BSPP	1/2 BSPP
Port Size, Z	1/4 BSPP	1/4 BSPP
a	3.31	3.94
b	1.24	1.44
c	1.06	1.22
SW	24mm	32mm
Weight (lbs)	.9	1.3
Part No.	**CLR-2951-417-V**	**CLR-2951-501-V**

Pilot-Operated Check Valves

7500 psi max

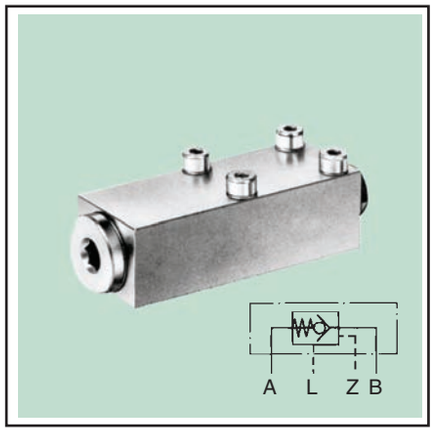

Manifold Mounted

- **Eliminates need for hose/tube connections**
- **Holds clamping pressure until released by a separate pilot pressure input**
- **Allows only one-way flow until released**
- **Locks cylinders in position if fluid line breaks**
- **May be used to prevent workpieces from floating between opposing clamps**

DESCRIPTION: These check valves are designed in accordance with DIN ISO 1219. According to this definition this type of valve is a locking valve. The flow B➔A is free. The flow from A➔B is locked, but it can be hydraulically unlocked by pressurizing control port Z.

APPLICATION: Locking of leakage-free hydraulic cylinders, i.e., maintaining the pressure and (or) the position, can also be used in combination with non-leakage-free directional control valves.

In fixtures these check valves are combined with manifold-mounted or threaded clamping elements and thus enable oil supply without lines.

Application Example:

Clamping bar for multiple clamping device. In each bar there are 10 low-clamping block cylinders and threaded work supports arranged in a row.

On the opposite side there is a similar bar. This is called "floating clamping."

In order to avoid the cylinders giving way under the effect of the operating forces one unlockable check valve for each cylinder is installed, which is facilitated because the valves can be manifold-mounted.

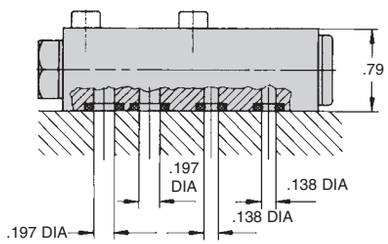

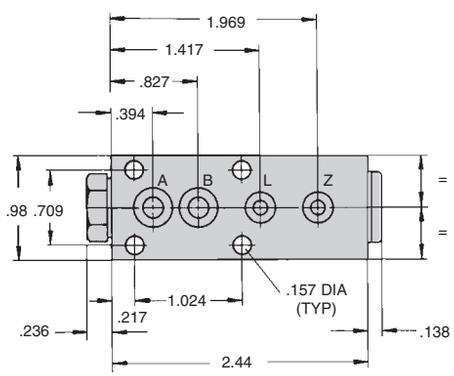

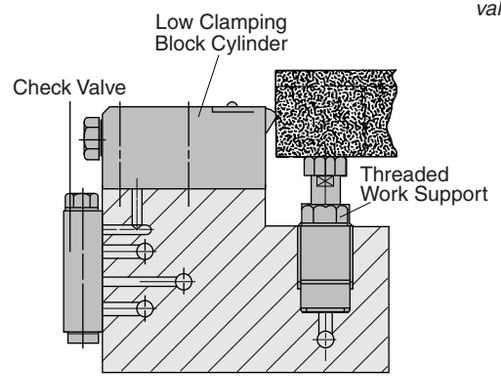

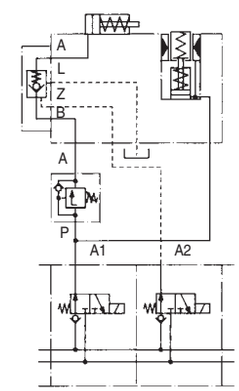

Control pressure for unlocking

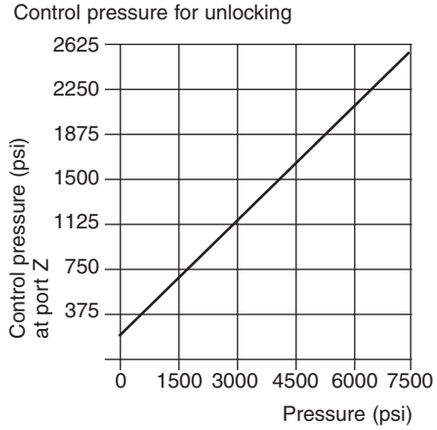

at p_B = 0 psi (pressure at port B)

△ p-Q curves

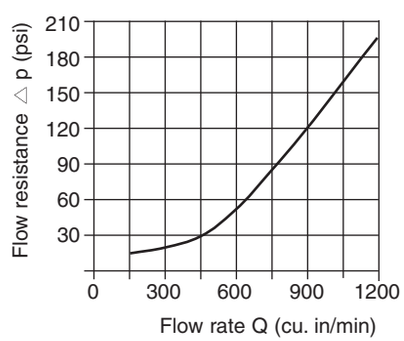

Oil viscosity during measurements 60 mm/s

Maximum operating pressure (psi)		7500
Maximum flow rate (cu. in./min.)		1200
Pilot oil volume (cu. in.)		.012
Weight (lbs.)		0.55
Part No. Spare O-Ring	A, B	**CLR-3000-942-SW**
	L, Z	**CLR-3000-968-SW**

SWIFTSURE®

CARR LANE ROEMHELD MFG. CO.

Sales—Phone (314) 647-6200 Fax (314) 647-5736
Engineering—Phone 1-800-827-2526 Fax (636) 386-8034

Shutoff Valves

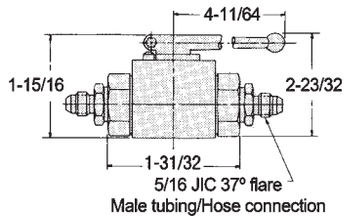

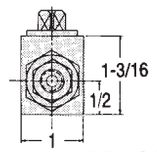

APPLICATIONS:
1. Shutting off unused lines in a multi-purpose fixture.
2. Holding fixture pressure temporarily while transporting with power source disconnected.

DESIGN CONSIDERATIONS: Note: a shutoff valve cannot be used to clamp and unclamp. See page 87 for clamping valves.

Symbol

Max. operating pressure (psi)	7500
Mounting	In line
Lever Movement	90°
Weight (lbs)	0.7
Part No.	**CLR-400-V**

Relief Valves

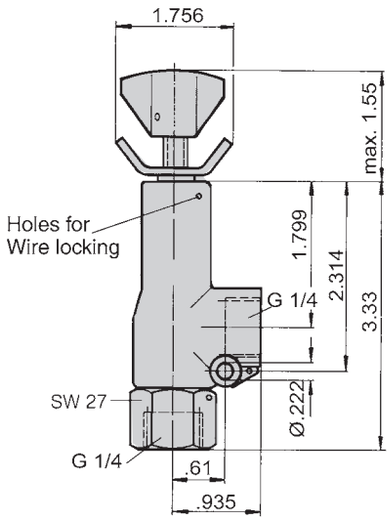

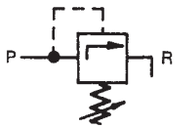

Symbol

APPLICATIONS: To protect hydraulic circuits from unexpected pressure increases, such as when the temperature of a closed system increases beyond maximum operating pressure.

CONSTRUCTION: Poppet-type valve, directly controlled.

Max. operating pressure (psi)	7500
Adjustment range (psi)	450-7500
Mounting	In line
Weight (lbs)	3.3
Part No.	**CLR-2952-521-V**

Flow Control Valves

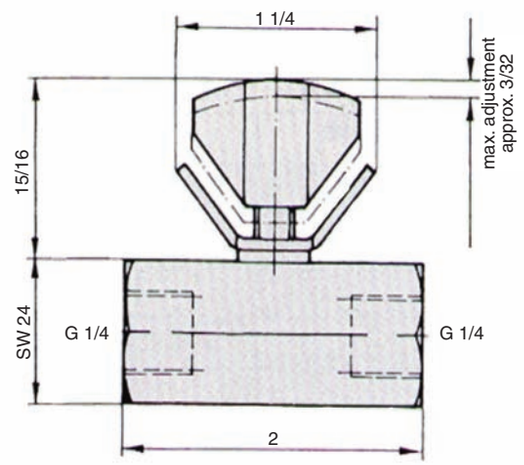

APPLICATIONS: To restrict flow from high-flow-rate power sources for proper component operation (Swing Clamps, Extending Clamps, and Fluid-Advanced Work Supports for example).

OPERATION: Turn knob for precision flow control in one direction, with unrestricted free flow in the opposite.

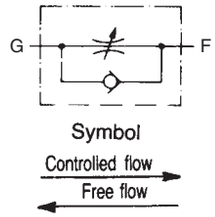

Max. operating pressure (psi)	7500
Mounting	In line
Weight (lbs)	0.7
Part No.	**CLR-541-V**

Check Valves

APPLICATION: Simple flow restrictor. Allows fluid to flow in only one direction (see arrow).

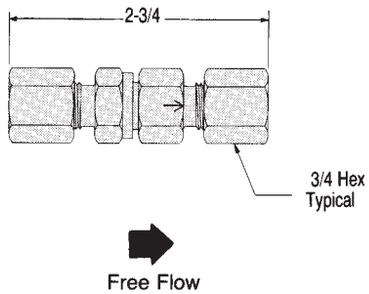

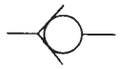

Symbol

Cartridge-type check valves are also available. Please contact factory for more information.

Max. operating pressure (psi)	7500
Mounting	In line
Weight (lbs)	0.3
Part No.	**CLR-811-V**

CARR LANE ROEMHELD MFG. CO.
Sales—Phone (314) 647-6200 Fax (314) 647-5736
Engineering—Phone 1-800-827-2526 Fax (636) 386-8034

Fittings & Accessories

Rotary Couplings

Single Passage (90°)
page 101

Single Passage (straight)
page 101

Two Passage
pages 102-102.1

Four Passage
page 102

Rotary Valve Couplings
pages 103-105

Pallet Coupling

Pallet Decouplers
pages 106-108

Accumulators
See Website

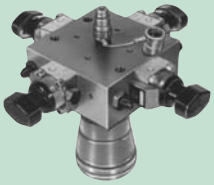

Pallet Decouplers for Tooling Blocks
page 110

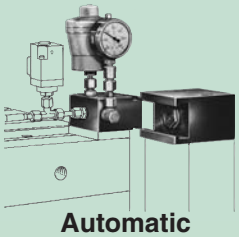

Automatic Coupling Systems
pages 111-112

Threaded Coupling Elements
pages 114-115

Pressure Monitoring

Control Cylinders
page 116

Pressure Switches
page 117

Air Accessories

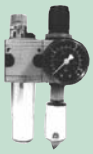

Filter/Regulator/ Lubricators
page 118

Fine Pressure Regulators
page 118

Air Flow Controls
page 118

Air Extractor/Dryers
page 118

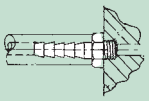

Air Vent Fittings
page 121

Fittings, Tubing, Hose, etc.

Manifolds
page 118

Quick Disconnects
page 119

Gauges
page 118

Hose
page 120

Tubing
page 120

Fluid
page 120

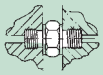

Fittings
pages 121-122

Tubing Installation & Manifold Mounting
pages 123-124

Fluid Filters
page 119.1

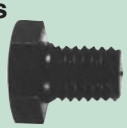

Contact Bolts
page 128

SWIFTSURE®

CARR LANE ROEMHELD MFG. CO.

Sales—Phone (314) 647-6200 Fax (314) 647-5736
Engineering—Phone 1-800-827-2526 Fax (636) 386-8034

Rotary Couplings

7500 psi max
Single acting

Single Passage — Elbow

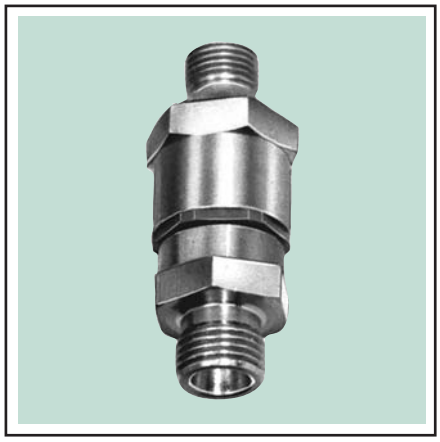

Single Passage — Straight

- **Best choice for feeding fluid to rotating pallet changers, due to constant connection.**
- **Ideal for rotary index tables.**
- **Also good for elbow connections that regularly swing through a small arc**
- **Choice of elbow or straight version**

**** Do not use NPT fittings**

MOUNTING: Mount at rotational center to prevent side loading. Screw into standard 1/4 BSPP port.

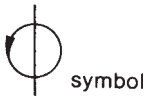

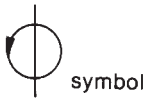

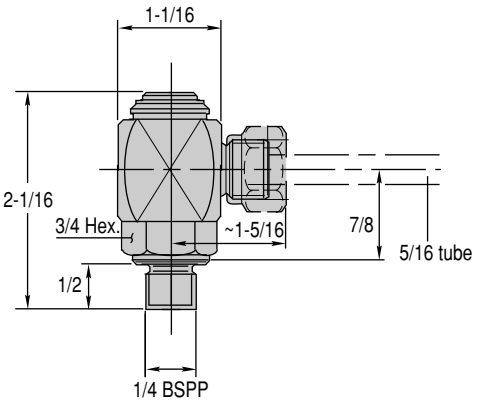

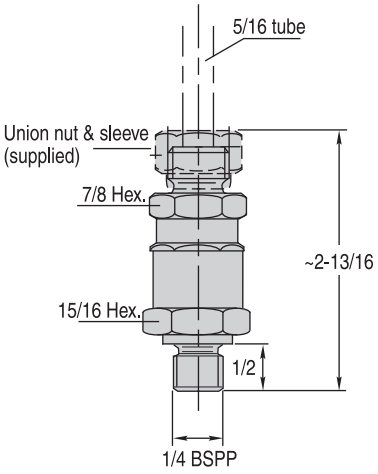

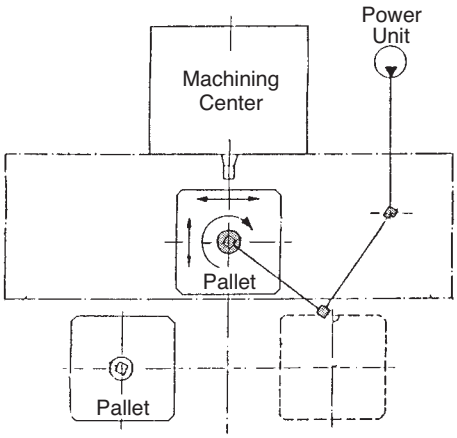

Machining-center pallet changer with continuous fluid feed using Rotary Couplings.

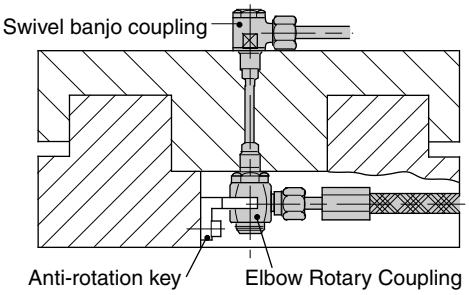

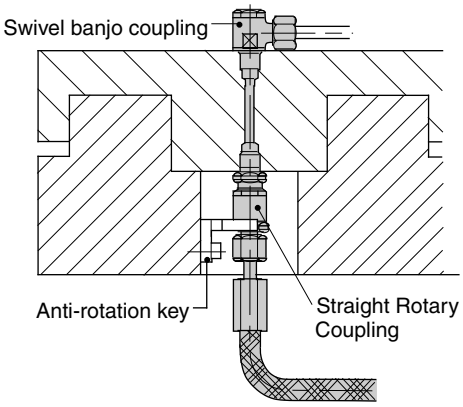

Number of passages	1
Max. operating pressure (psi)	7500
Maximum rotational speed (RPM)	20
Max. seating torque (ft-lbs)	44
Starting torque at 7500 psi (ft-lbs)	1.0
Part No., Elbow	**CLR-843-F**
Part No., Straight	**CLR-845-F**

CARR LANE ROEMHELD MFG. CO.
Sales—Phone (314) 647-6200 Fax (314) 647-5736
Engineering—Phone 1-800-827-2526 Fax (636) 386-8034

Rotary Couplings

7500 psi max
Single and double acting

Two Passage

Symbol

Four Passage

Symbol

Six Passage

Symbol

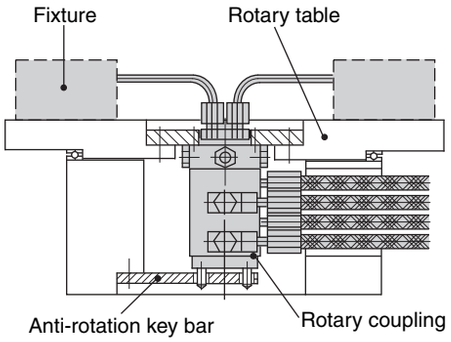

Four-passage rotary coupling with a reaction-bar to prevent stress on hose connections.

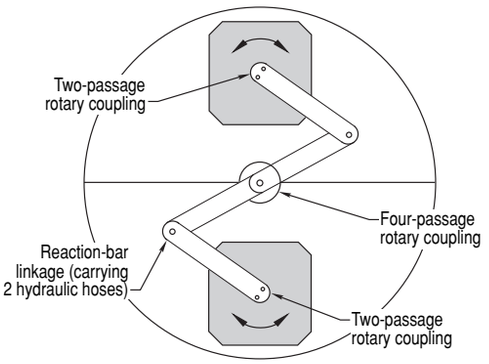

Rotary couplings are frequently used on horizontal machining centers with rotary pallet changers. A reaction-bar linkage holds the top portion of each two-passage coupling stationary while the bottom portion revolves freely. Couplings are not designed to carry load. Side load will cause excessive, uneven wear resulting in failure.

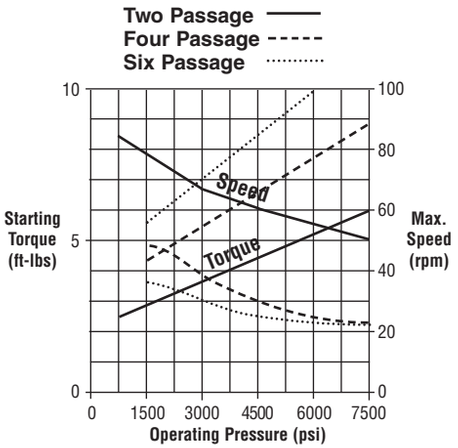

Number of passages	2	4	6
Max. flow rate (cu. in./min.)	493	493	493

Standard

Leakage rate (cu. in./hr.)	.02	.04	—
Weight (lbs)	6	12	—
Part No., 150-3600 psi	**CLR-9281-106-F**	**CLR-9284-006-F**	—
Part No., 1500-7500 psi	**CLR-9281-103-F**	**CLR-9284-005-F**	—

With Leakage Recirculation

Weight (lbs)	7	14	19
Part No., 150-3600 psi	**CLR-9281-105-F**	**CLR-9284-106-F**	**CLR-9286-105-F**
Part No., 1500-7500 psi		**CLR-9284-105-F**	

SWIFTSURE®

CARR LANE ROEMHELD MFG. CO.
Sales—Phone (314) 647-6200 Fax (314) 647-5736
Engineering—Phone 1-800-827-2526 Fax (636) 386-8034

Rotary Couplings

7500 psi max
Single and double acting

- **Best choice for feeding fluid to rotating pallet changers, due to constant connection.**
- **Ideal for rotary index tables.**
- **Can also be used for double-acting clamps.**
- **Choice of two, four, or six independent passages.**
- **Specials are readily available. Please contact factory.**

OPERATION: Each passage is supplied separately. This allows independent operation of two, four, or six (depending on model) sets of spring-return (single-acting) clamps.

MOUNTING: Either the top or bottom can be mounted by screws through the supplied holes. Do not hard mount both sides. Use anti-rotational key on one side.

DESIGN CONSIDERATIONS: The fluid pressure in the rotary coupling will add to the table's starting torque requirement and affect the maximum table operating speed. Please check the graph on page 102. Fluid must be clean (10 micron or better nominal filtration). Couplings can not be side-loaded. Any weight applied will shorten the life of the unit.

Two Passage

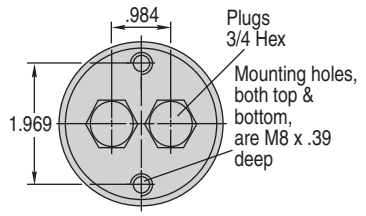

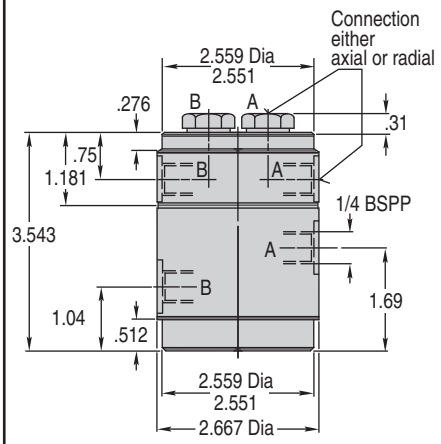

Standard

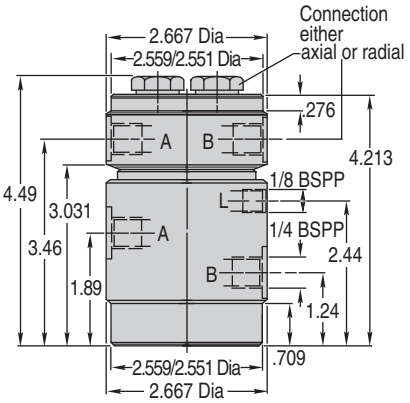

With Leakage Recirculation

Four Passage

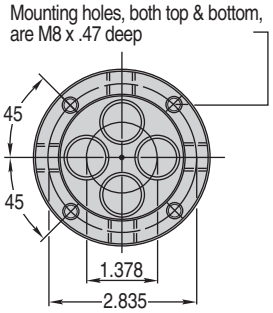

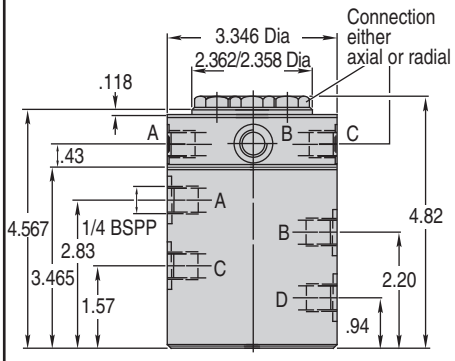

Standard

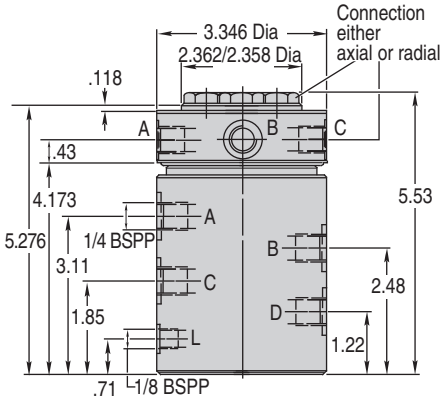

With Leakage Recirculation

Six Passage

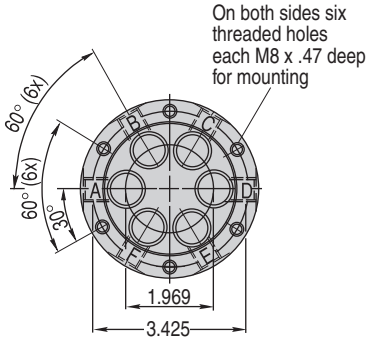

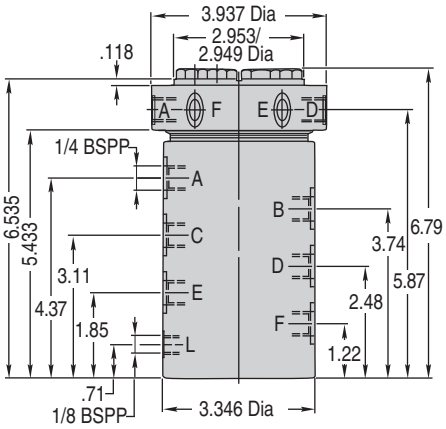

With Leakage Recirculation

CARR LANE ROEMHELD MFG. CO.
Sales—Phone (314) 647-6200 Fax (314) 647-5736
Engineering—Phone 1-800-827-2526 Fax (636) 386-8034

Rotary Valve Couplings

7500 psi max
Single and double acting

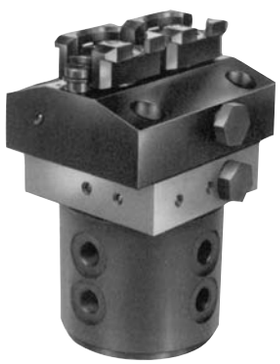

- **For rotary index tables with an independent load/unload station**
- **Unload and reload while all other stations remain clamped**
- **Unclamps automatically at load station, or via a clamping valve**
- **Available from stock for rotary tables with 2 through 8 stations**

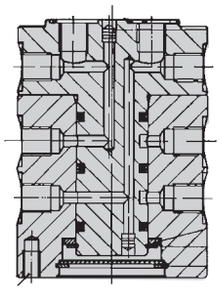

OPERATION: One half of the Rotary Valve Coupling rotates with the index table, while the other half remains stationary. Each time the table and coupling index, a new station automatically becomes the load/unload station. The coupling supplies fluid to the loading station separately from all other stations. The loading station can be either unclamped and reclamped automatically as the coupling rotates, or controlled by a separate clamping valve.

CLAMPING MANUALLY: The loading station can be clamped and unclamped manually (or by a machine controller's electrical signal) using a 3-way valve mounted off the rotating table. This insures that a new workpiece will not move during indexing, before it is securely clamped. See page 87 for hand-, cam- or air pilot-operated valves. Double-acting clamps require a 4 way valve.

CLAMPING AUTOMATICALLY: To automatically unclamp and reclamp the load station as the coupling rotates, connect the coupling's return line R directly to the power source's reservoir (no pressure). To avoid any pressure drop as the table indexes, the power source's fluid flow rate (cu.in./min.) should be at least 240 times the fluid required at any one clamping station (cu.in.). Otherwise an accumulator must be installed on the pressure line from the power source.

DESIGN CONSIDERATIONS:

1. To use a standard Rotary Valve Coupling, the table must rotate through the same angle during each indexing movement.
2. Turning the coupling requires additional table-motor starting torque, especially when clamping automatically during indexing.
3. Maximum rotational speed is 10 RPM.
4. Use only with the following hydraulic fluids: those listed on page 120. To use any other hydraulic fluid, check with factory first. Fluid must be clean (10 micron or better nominal filtration).
5. Do not turn coupling while dry, even before installation. Fill unused ports with fluid before capping off (e.g. when using an 8-station coupling for 4 stations.
6. Use only 1/4 BSPP fittings. Fitting-installation torque must be 28-35 ft.lbs.
7. Couplings can not carry load. Especially side load which will cause excessive, uneven wear.
8. With the load station unclamped, there is a small return-line leakage rate. Always install an accumulator, especially above 3000 psi.

MOUNTING: Firmly fasten either the top or bottom half of the coupling using the tapped mounting holes provided. Use a floating reaction bar to prevent the other half from rotating. Mount at the center of rotation, either above, below, or on the rotary table.

SPECIALS: For additional stations or special features, please contact factory.

Rotary Valve Couplings are also available for use with automatic coupling systems, for loading multi-sided tooling blocks. Please contact factory for information.

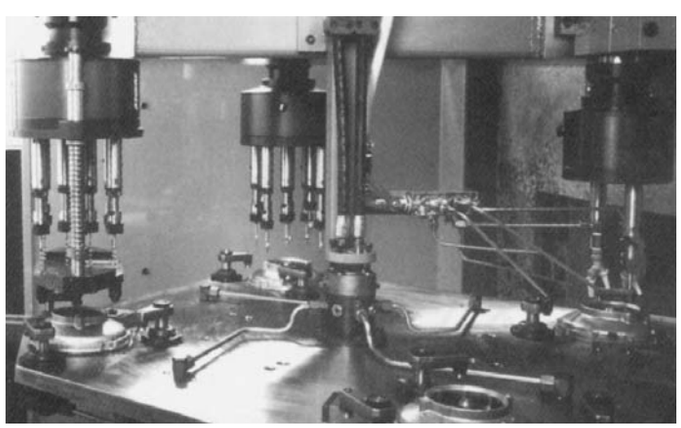

This application shows a multiple-spindle machine with four stations, for machining aluminum covers. An 8-station rotary valve coupling is at the center, with its four unused ports plugged.

Type of clamps	Single Acting	Double Acting
Max. operating pressure (psi)	7500	7500

Type 1 — Single Station for Load/Unload

Part No., 5 station	CLR-9295-001-V	CLR-9295-002-V
Part No., 6 Station (also 2 & 3)	CLR-9296-001-V	CLR-9296-002-V
Part No., 8 Station (also 4)	CLR-9298-001-V	CLR-9298-002-V
Part No., 10 Station	CLR-9290-001-V	CLR-9290-002-V

Type 2 — Two Stations for Load/Unload Commonly Controlled

Part No., 6 station (also 2 & 3)	CLR-9296-011-V	CLR-9296-012-V
Part No., 8 Station (also 4)	CLR-9298-011-V	CLR-9298-012-V
Part No., 10 Station (also 5)	CLR-9290-011-V	CLR-9290-012-V

Type 3 — Two Stations for Load/Unload Separately Controlled

Part No., 6 station (also 2 & 3)	CLR-9296-101-V	CLR-9296-102-V
Part No., 8 Station (also 4)	CLR-9298-101-V	CLR-9298-102-V
Part No., 10 Station (also 5)	CLR-9290-101-V	CLR-9290-102-V

CARR LANE ROEMHELD MFG. CO.
Sales—Phone (314) 647-6200 Fax (314) 647-5736
Engineering—Phone 1-800-827-2526 Fax (636) 386-8034

Rotary Valve Couplings

7500 psi max
Single and double acting

Type 1
Single Station for Load/Unload

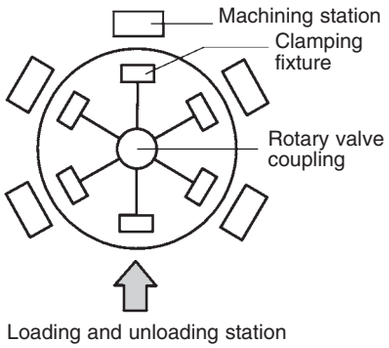

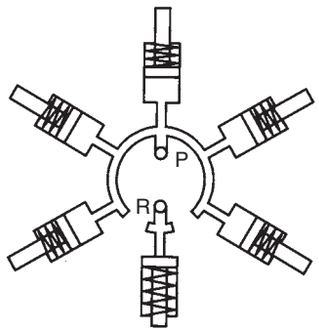

Circuit example - 6 stations

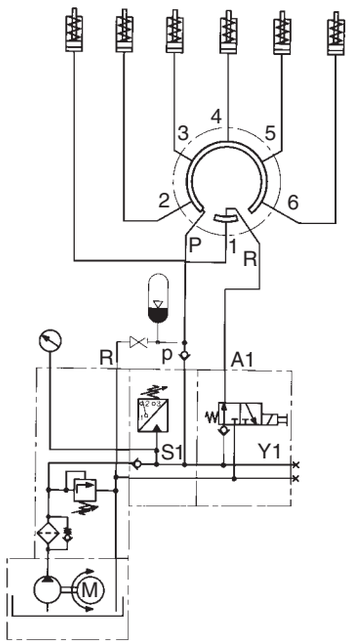

Type 2
Two Stations for Load/Unload Commonly Controlled

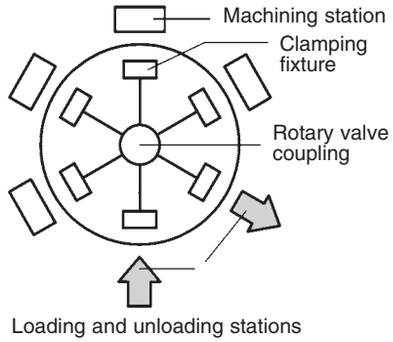

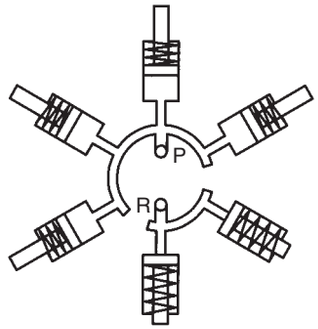

Circuit example - 6 stations

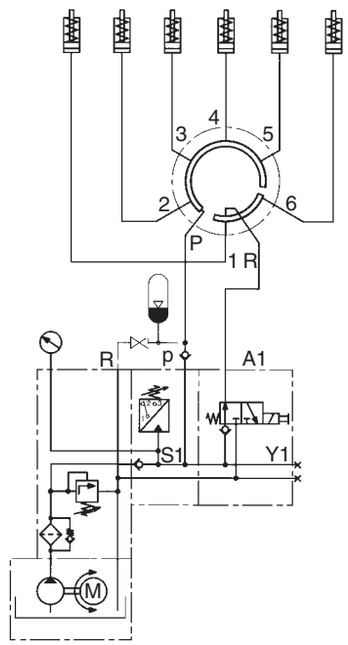

Type 3
Two Stations for Load/Unload Separately Controlled

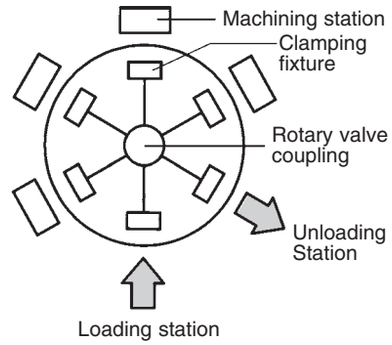

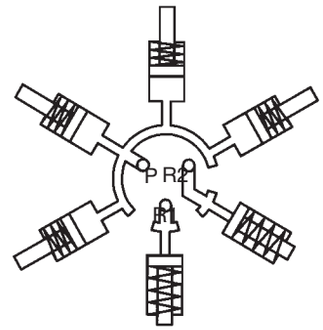

Circuit example - 6 stations

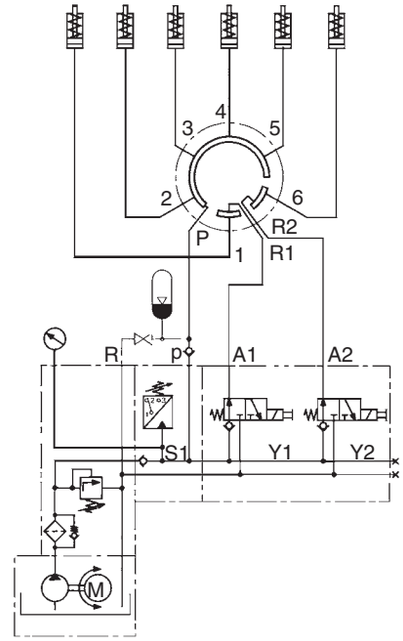

Rotary Valve Couplings

7500 psi max
Single and double acting

Types 1 & 2 Single Acting

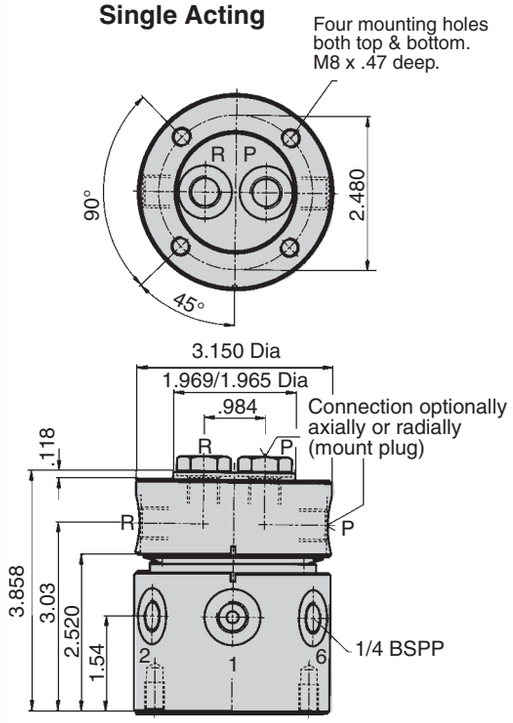

Type 3 Single Acting

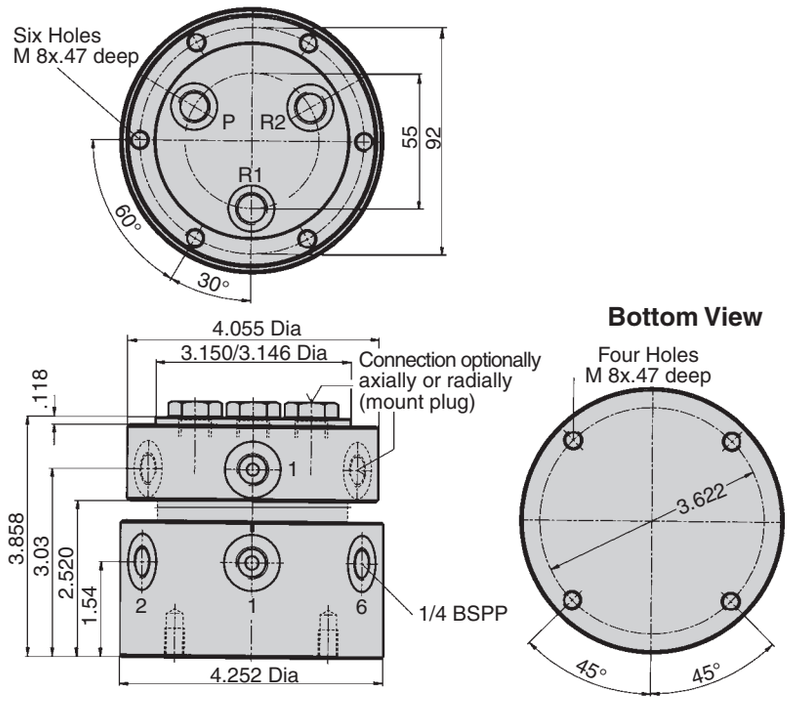

Types 1 & 2 Double Acting

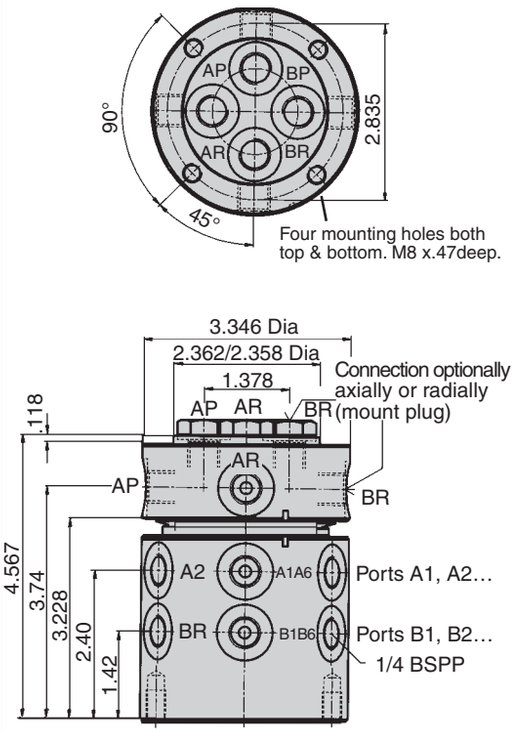

Type 3 Double Acting

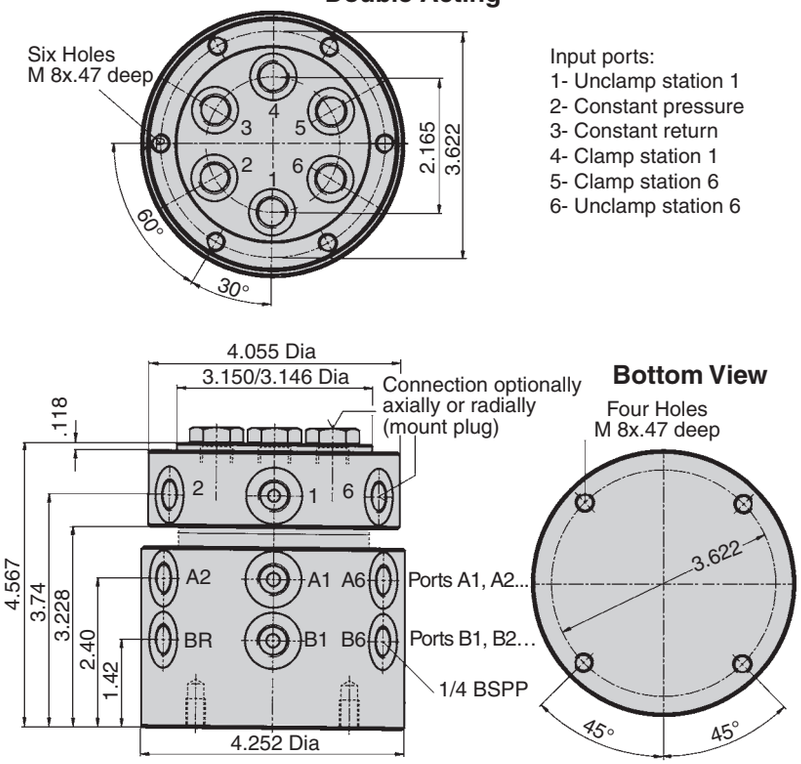

Rotary Air Valve Couplings

145 psi air max
Single and double acting

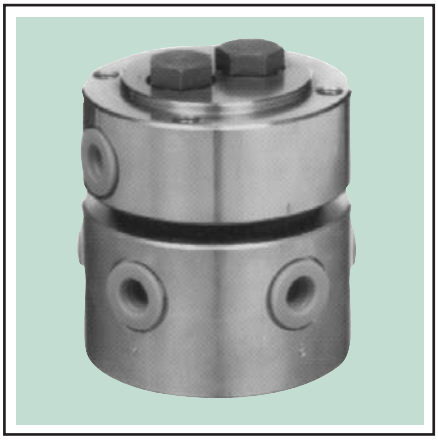

- **For rotary index tables with an independent load/unload station**
- **Unload and reload while all other stations remain clamped**
- **Unclamps automatically at load station, or via a clamping valve**
- **Available from stock for rotary tables with 2 through 10 stations**

OPERATION: One half of the Rotary Valve Coupling rotates with the index table, while the other half remains stationary. Each time the table and coupling index, a new station automatically becomes the load/unload station. The coupling supplies loading station separately from all other stations. The loading station can be either unclamped and reclamped automatically as the coupling rotates, or controlled by a separate clamping valve.

DESIGN CONSIDERATIONS:

1. To use a standard Rotary Valve Coupling, workpiece must be unloaded and reloaded at the same station. Also, the table must rotate through the same angle during each indexing movement.
2. Turning the coupling requires additional table-motor starting torque, especially when clamping automatically during indexing.
3. Maximum rotational speed is 10 RPM.
4. Although couplings are well sealed, an external cover may be necessary to protect the coupling's siding surfaces against extreme dirt and grit.

CLAMPING BY CONTROL VALVE: The loading station can be clamped and unclamped manually (or by a machine controller's electrical signal) using a 3-way valve mounted off the rotating table. This insures that a new workpiece will not move during indexing, before it is securely clamped. Double-acting clamps require a 4-way valve.

MOUNTING: Firmly fasten either the top or bottom half of the coupling using the tapped mounting holes provided. Use a floating reaction bar to prevent the other half from rotating. Mount at the center of rotation, either above, below, or on the rotary table.

SPECIALS: For additional stations or special features, please contact factory. Possibilities include:

1. Any number of stations
2. Multiple load stations (2 or more)
   — Controlled independently or together
   — Side by side, opposite, or at any other orientation

Single Acting

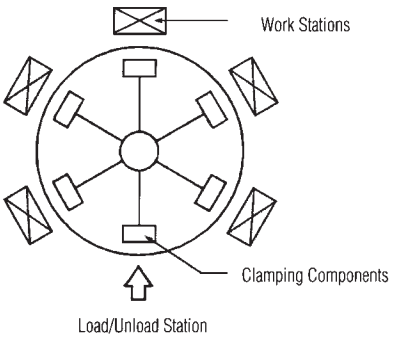

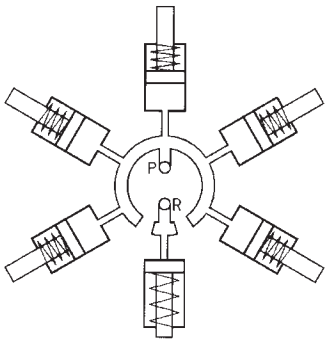

Single Acting

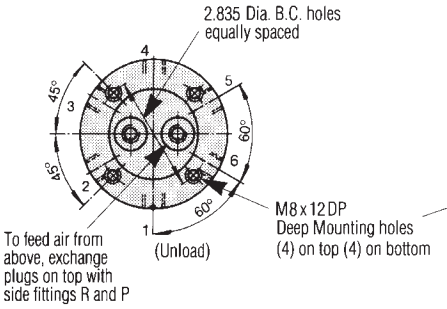

Double Acting

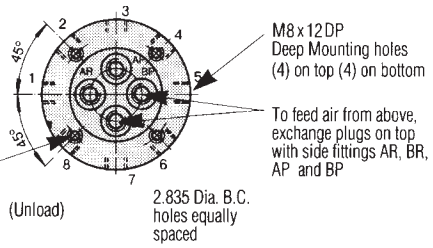

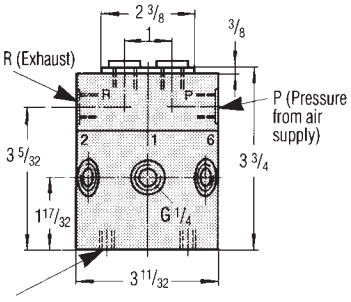

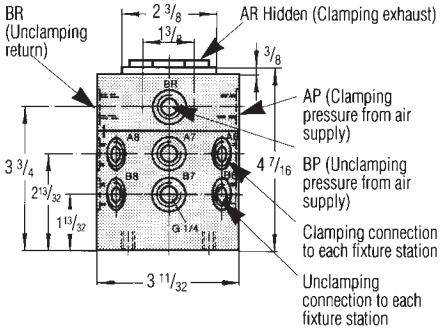

Type Clamp	Single-Acting	Double-Acting
Max. Operating Pressure (psi)	145	145
Part No. 5 Station	**CLR-9295-601-V**	**CLR-9295-602-V**
Part No. 2, 3, 6 Station	**CLR-9296-601-V**	**CLR-9296-602-V**
Part No. 7 Station	**CLR-9297-601-V**	**CLR-9297-602-V**
Part No. 4, 8 Station	**CLR-9298-601-V**	**CLR-9298-602-V**

CARR LANE ROEMHELD MFG. CO.
Sales—Phone (314) 647-6200 Fax (314) 647-5736
Engineering—Phone 1-800-827-2526 Fax (636) 386-8034

Pallet Decouplers

7500 psi max
Single acting

Single Acting

- **Allows disconnecting a single-acting fixture from its power source before machining**
- **Compact assembly mounts easily on fixture (lay gauge flat for an even lower profile)**
- **Ideal for pallets and rotating fixtures where a fluid feed line is impractical**
- **Decoupler includes shutoff valve, quick disconnect, accumulator, pressure gauge, and pressure-relief valve**
- **Do not use NPT fittings**

POWER UNIT: Any standard single-acting power unit can be used with this pallet decoupler.

OPERATION:

1. Remove protective cap from male quick disconnect on decoupler. Clean coupling components if necessary.
2. Connect hydraulic hose, with female quick disconnect, to the pallet decoupler. The power unit should be in unclamped mode (depressurized) before connection.
3. Open shutoff valve on decoupler to unclamp fixture.
4. After unloading and reloading fixture, actuate power unit to clamp.
5. After pressure gauge shows proper clamping pressure, close shutoff valve on decoupler.
6. Switch power unit to unclamped mode.
7. Disconnect hose and replace protective cap on male quick disconnect. Hose can be connected to optional safety support while not in use.

SAFETY FEATURES: Pallet decouplers include an accumulator to compensate for pressure changes due to temperature variations. Important: use pallet decouplers only with SWIFTSURE components, because all system components must be zero leakage. These decouplers are equipped with a pressure-relief valve to protect the fixture and the accumulator from extreme temperature increases. An optional safety support with a limit switch can be used to hold the hydraulic hose after uncoupling, to ensure that the fixture is disconnected before moving.

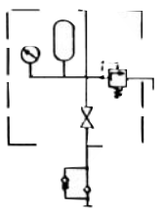

Symbol

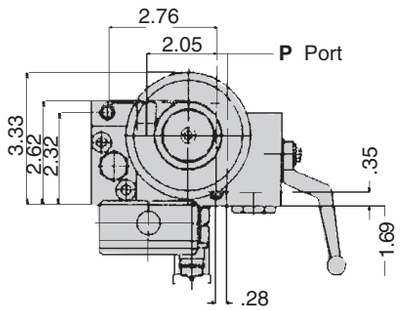

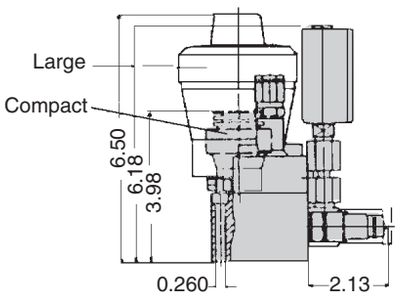

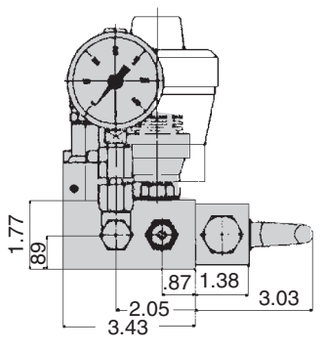

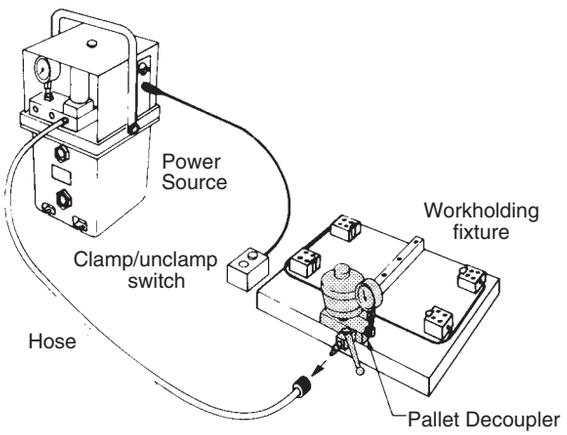

Accumulator Size	Compact	Large
Maximum operating pressure (psi)	7500	7500
Minimum operating pressure (psi)	1800	1800
Accumulator volume at 7500 psi (cu. in.)	0.6	3.4
Accumulator volume at 1800 psi (cu. in.)	0.16	0.9
Accumulator gas preload (psi)	1450	1450
Weight (lbs)	6.0	8.0
Part No., Decoupler	**CLR-9425-012-PD**	**CLR-9425-011-PD**
Part No., Female Disconnect	**CLR-9384-106-F**	
Part No., Safety Support	**CLR-0942-001-PDA**	

Pallet Decouplers

7500 psi max
Single or double acting

Single Acting or Double Acting with Automatic Shutoff

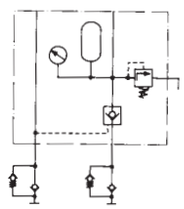

Symbol

- **Allows disconnecting a single-acting fixture, a double-acting fixture, or a fixture with several individual clamping valves from its power source before machining**
- **Automatic shutoff using a pilot-operated check valve…no manual shutoff valve required!**
- **Compact assembly mounts easily on fixture**
- **Ideal for pallets and rotating fixtures where a fluid feed line is impractical**
- **Decoupler includes pilot-operated check valve, quick disconnects, accumulator, pressure gauge, and pressure-relief valve**

POWER UNIT: A double-acting power unit with a four-button control switch (B1, B2, B3, B4) is required to use this pallet decoupler for either a single-acting fixture or a double-acting fixture. The power unit provides automatic shutoff capability, via the decoupler's pilot-operated check valve, and allows depressurizing both pressure hoses simultaneously for uncoupling. See table below for power-unit part number. This pallet decoupler can also be used where clamping is controlled by individual clamping valves on the fixture (3-way valves for single acting or 4-way valves for double acting). In that application, one constant-pressure hose and one return hose are connected to the decoupler, so any standard single-acting power unit can be used.

OPERATION (SINGLE-ACTING OR DOUBLE-ACTING FIXTURE):

1. Remove protective caps from male quick disconnects on decoupler. Clean coupling components if necessary.
2. Connect double coupler, with both hydraulic pressure hoses attached, to the pallet decoupler. The power unit should be depressurized in uncoupled mode (button B4 pressed) before connection.
3. Press button B3 to switch to coupled mode. The clamp/unclamp buttons (B1 and B2) are now operational.
4. Press button B2 to unclamp fixture.
5. After unloading and reloading fixture, press button B1 to clamp.
6. After pressure gauge shows proper clamping pressure, press button B4 to uncouple.
7. Disconnect double coupler and replace protective caps on male quick disconnects. Double coupler can be connected to the optional safety support while not in use.

OPERATION (FIXTURE WITH SEVERAL INDIVIDUAL CLAMPING VALVES):

1. Remove protective caps from male quick disconnects on decoupler. Clean coupling components if necessary.
2. Connect double coupler, with one pressure hose and one return hose attached, to the pallet decoupler. The power unit should be in unclamped mode (depressurized) before connection.
3. Switch power unit to clamped mode (pressurized). The individual clamping valves on the fixture are now operational.
4. Operate individual clamping valves on the fixture independently to remove finished parts and reload.
5. After all new workpieces are clamped, switch power unit to unclamped mode (depressurized).
6. Disconnect double coupler and replace protective caps on male quick disconnects. Double coupler can be connected to the optional safety support while not in use.

SAFETY FEATURES: Pallet decouplers include an accumulator to compensate for pressure changes due to temperature variations. Important: use pallet decouplers only with SWIFTSURE components, because all system components must be zero leakage. These decouplers are equipped with a pressure-relief valve to protect the fixture and the accumulator from extreme temperature increases. An optional safety support with a limit switch can be used to hold the double coupler after uncoupling, to ensure that the fixture is disconnected before moving.

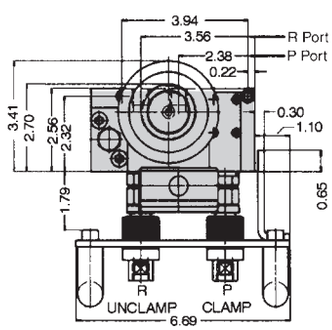

Female Disconnect Double Coupler
(order separately)

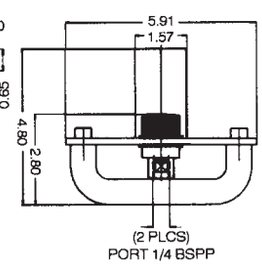

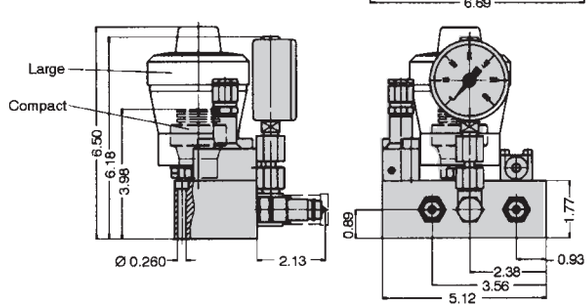

Accumulator Size	Compact	Large
Maximum operating pressure (psi)	7500	7500
Minimum operating pressure (psi)	1800	1800
Accumulator volume at 7500 psi (cu. in.)	0.6	3.4
Accumulator volume at 1800 psi (cu. in.)	0.16	0.9
Accumulator gas preload (psi)	1450	1450
Weight (lbs)	6.0	8.0
Part No., Decoupler	**CLR-9425-022-PD**	**CLR-9425-021-PD**
Part No., Female Disconnect Double Coupler	**CLR-9425-102-PDA**	
Part No., Safety Support	**CLR-0942-002-PDA**	
Electric Power Unit, 7500 psi, 460V	**CLR-939-EP**	
Electric Power Unit, 7500 psi, 230V	**CLR-839-EP**	
Electric Power Unit, 5000 psi, 460V	**CLR-940-EP**	
Electric Power Unit, 5000 psi, 230V	**CLR-840-EP**	

SWIFTSURE®

CARR LANE ROEMHELD MFG. CO.

Sales—Phone (314) 647-6200 Fax (314) 647-5736
Engineering—Phone 1-800-827-2526 Fax (636) 386-8034

Tooling-Block Pallet Decouplers

7500 psi max
Single acting

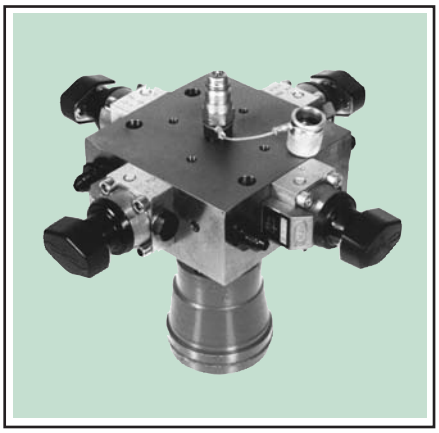

Four-Sided

- **Extremely convenient fluid supply for multi-face pallets. Requires only one connection!**
- **Controls each tooling-block face independently with a 3-way clamping valve**
- **Decouples easily for machining . . . no shutoff valve required!**
- **Complete with all valves, quick disconnect, and accumulator**
- **Specials available for more than four faces, and for VTL fixtures. Please contact factory.**

****Do not use NPT fittings**

OPERATION: Requires only one fluid line from the power unit to the decoupler, due to internal hydraulic circuitry. Unload and reload using one of the two sequences below. The built-in accumulator stores fluid as the fixture is pressurized.

PROCEDURE TO UNLOAD ALL FACES THEN RELOAD ALL FACES (TWO TURNS):

1. Connect hose from power unit to the decoupler's quick disconnect (with power unit in "unclamped" position).
2. To unload first face, turn its clamping valve to "unclamped" position, then remove part. Index and repeat for all faces.
3. Switch power unit to "clamped" position.
4. Load new part on first face, then turn its clamping valve to "clamped" position. Index and repeat for all faces.
5. Switch power unit to "unclamped" position.
6. Disconnect hose and begin machining.

MOUNTING: Mount on top of tooling block, at its rotational center. Fasten with four socket-head cap screws. Bore hole in center of block to provide clearance for accumulator. Locate power unit's push-button switch near the loading area.

DESIGN CONSIDERATIONS: Use the Pallet Decoupler only with SWIFTSURE clamps, since all components must be leakfree. The accumulator compensates for temperature change only. We recommend installing a pressure gauge on each fixture face. Important: feed hydraulic hose from directly above pallet so that the hose cannot twist more than a few degrees, especially with short hoses. If necessary, install a Rotary Coupling (pages 101-102) on the hose end opposite the pallet, carefully mounted to avoid strain. Use only heavy-duty hose (page 120, bottom). Fluid must be clean (10 micron or better nominal filtration).

Patent pending.

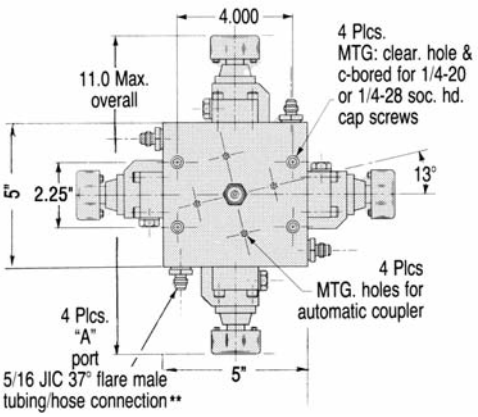

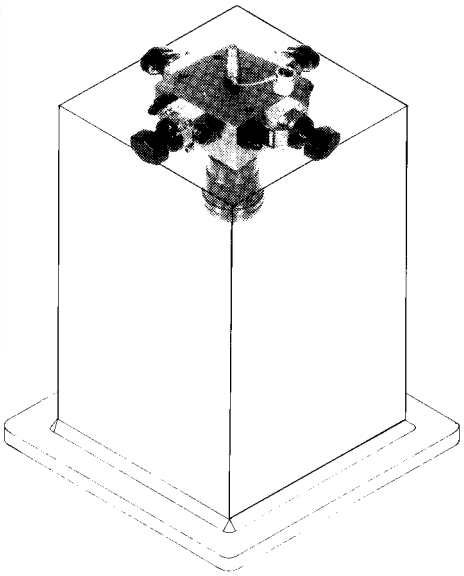

Four-sided tooling block with a Pallet Decoupler mounted on top. Clamping valves control each face independently.

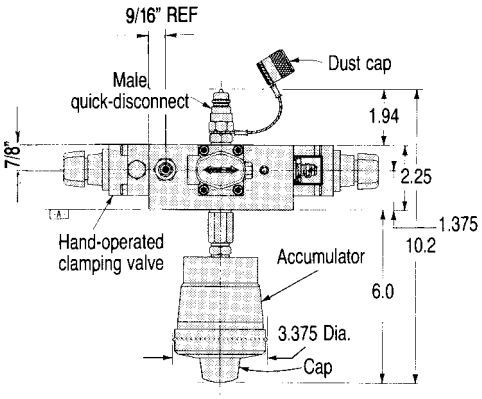

Accumulator Size	Compact	Large
ÇMaximum operating pressure (psi)	Ç7500	Ç7500
Minimum operating pressure (psi)	1800	1800
Accumulator volume at 7500 psi (cu. in.)	0.6	3.4
Accumulator volume at 1800 psi (cu. in.)	0.16	0.9
Accumulator gas preload (psi)	1450	1450
Weight (Lbs.)	6.0	8.0
Part No., Decoupler - 4 sided	**CLR-401-PD**	**CLR-402-PD**
Part No., Decoupler - 2 sided	**CLR-421-PD**	**CLR-422-PD**
Part No., Female Disconnect	**CLR-202-F**	

SWIFTSURE®

CARR LANE ROEMHELD MFG. CO.

Sales—Phone (314) 647-6200 Fax (314) 647-5736
Engineering—Phone 1-800-827-2526 Fax (636) 386-8034

Automatic Coupling Systems

7500 psi max
Single and double acting

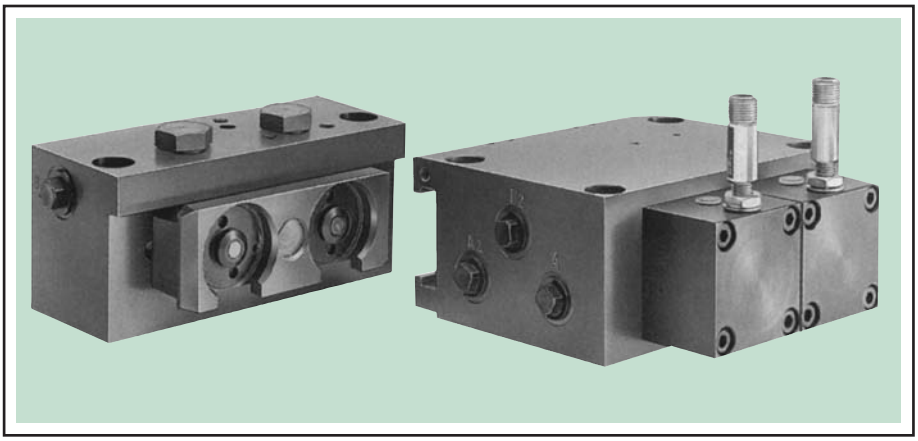

Pallet Unit and Base Unit

- **State-of-the-art turnkey automatic coupling for flexible manufacturing systems**
- **System consists of a Pallet Unit for each pallet, a Base Unit, and a special Electric Power Unit**
- **Unit couples under full pressure for unclamping**

DESIGN CONSIDERATIONS: Unit automatically compensates for axial misalignment within ± .028 inches. Pallet Unit and Base Unit must line up within this range. **Since all components must be leakfree, use only with SWIFTSURE clamps.** Also, since the fixture's fluid lines are sealed after disconnection, fluid pressure will increase if fixture temperature increases (about 80 psi per 1°F). Be careful not to exceed 7500 psi at any time during the machining cycle.

SAFETY PRECAUTIONS: Mount a control cylinder on pallet unit, install a limit switch on the machine tool to check that the control cylinder's plunger is extended, indicating proper pressure. Regularly check palletized fixtures for leaks by disconnecting the accumulator or shutting it off with a shutoff valve (CLR-400-V).

MOUNTING: Align units, then dowel in place with the holes provided. Fasten with socket-head cap screws. Mount in any position, preferably horizontal.

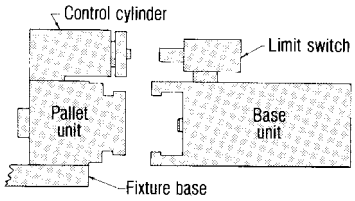

1. Units before coupling (Separated during machining operation).

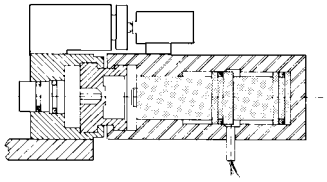

2. Slide Pallet Unit into place, ready for coupling. White indicator light indicates pallet is present.

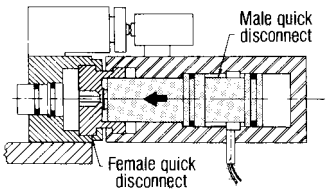

3. Press UNCLAMP button. Base unit extends male quick disconnect into female to make fluid connection. After connection, power unit automatically depressurizes fixture for unloading.

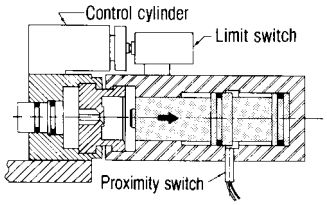

4. After loading, press CLAMP button so that power unit pressurizes fixture. Once fixture is fully pressurized (confirmed by control cylinder and external limit switch) base unit automatically retracts male quick disconnect. Internal proximity switch confirms full retraction and lights green indicator. Units are now ready to slide apart.

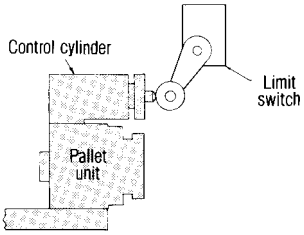

5. Once pallet is loaded on the machine table, a limit switch (or probe) mounted on the machine can monitor the fixture for full pressure using the control cylinder.

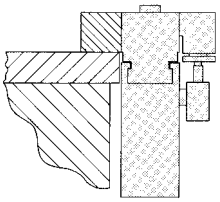

Units can also be mounted vertically.

Single Load Station | **Two Load Stations** (shuttle)

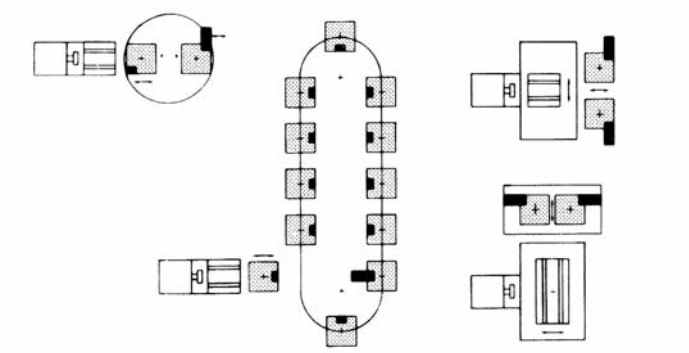

Control Cylinder (4350-7500 psi)	**CLR-0974-000-CC**
Control Cylinder (3200-5950 psi)	**CLR-0974-002-CC**
Control Cylinder (1400-2300 psi)	**CLR-0974-003-CC**
Limit Switch	**CLR-0974-001-CBA**

Maximum operating pressure (psi)	7500
Minimum operating pressure (psi)	1800
Pallet Unit, single acting	**CLR-4606-135-CPU**
Pallet Unit, double acting	**CLR-4606-235-CPU**
Base Unit, single acting	**CLR-4606-131-CBU**
Base Unit, double acting	**CLR-4606-231-CBU**
Electric Power Unit	**See page 74**

CARR LANE ROEMHELD MFG. CO.
Sales—Phone (314) 647-6200 Fax (314) 647-5736
Engineering—Phone 1-800-827-2526 Fax (636) 386-8034

Automatic Coupling Systems

7500 psi max
Single and double acting

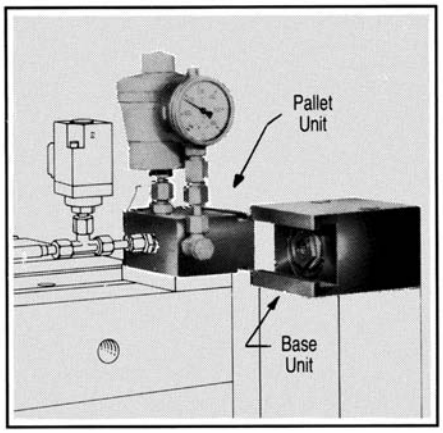

Please Note:

***Accumulator (Page** 109)*
***Control Cylinder (Page** 116)*
and Pressure Gauge (Page** 118)**. . .
are not included with the
Pallet Unit and must be ordered
separately.

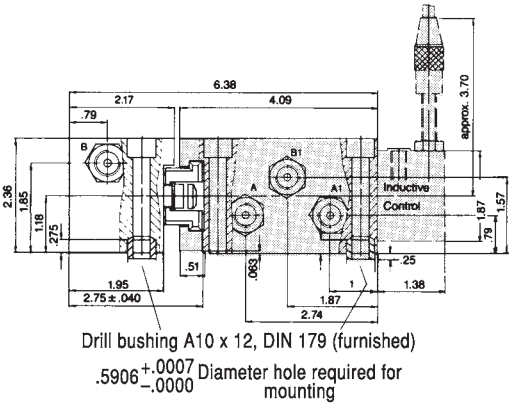

Single Acting

Symbol

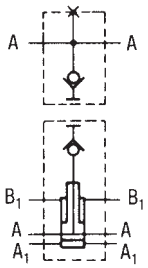

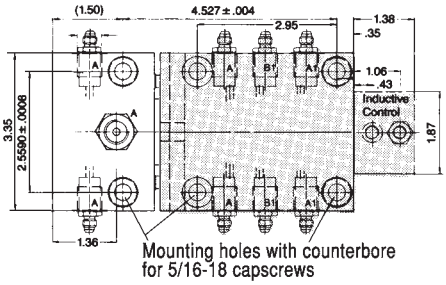

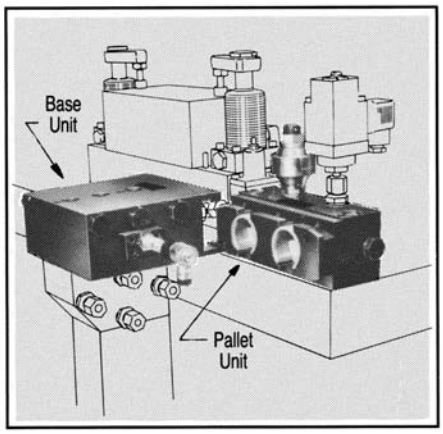

Please Note:

***Accumulator (Page** 109)*
***Control Cylinder (Page** 116)*
and Pressure Gauge (Page** 118)**. . .
are not included with the
Pallet Unit and must be ordered
separately.

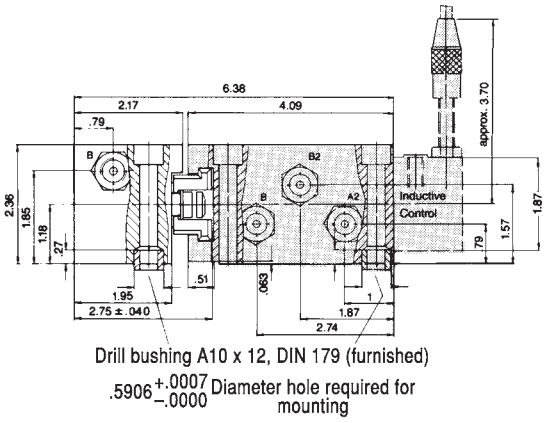

Double Acting

Symbol

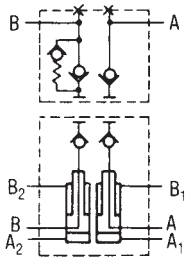

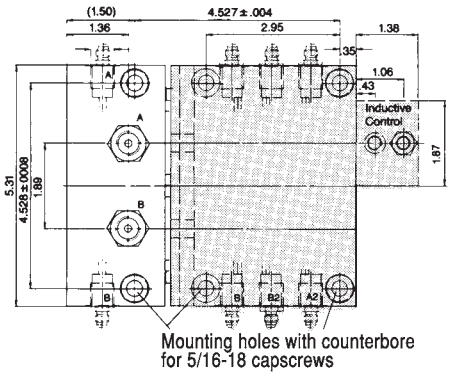

CARR LANE ROEMHELD MFG. CO.
Sales—Phone (314) 647-6200 Fax (314) 647-5736
Engineering—Phone 1-800-827-2526 Fax (636) 386-8034

Accumulators

7500 psi max

Compact

Large

- **Extremely compact accumulator, ideal for workholding applications**
- **Can also store fluid potential energy between working cycles**
- **Operates comfortably at up to 7500 psi**
- **Choice of large or compact size**

****Do not use NPT fittings**

SPECIFICATIONS: Nitrogen-filled diaphragm type accumulator. Allowable operating temperature 15 to 175° F. Install in any position, horizontal or vertical.

DESIGN CONSIDERATIONS:

1. Use only with SWIFTSURE components because all system components should be leakfree.
2. Since a fixture's fluid lines are sealed after disconnection from the power source, fluid pressure will actually *increase* if fixture temperature increases. This increase can be quite substantial: about 80 psi per 1°F. Be careful not to exceed 7500 psi at any time during the machining cycle. Always install a pressure gauge in the closed system.
3. If the possibility of exceeding 7500 psi exists, install a Relief Valve (page 97) in the system.
4. Shield accumulator if the possibility of accidental damage exists.

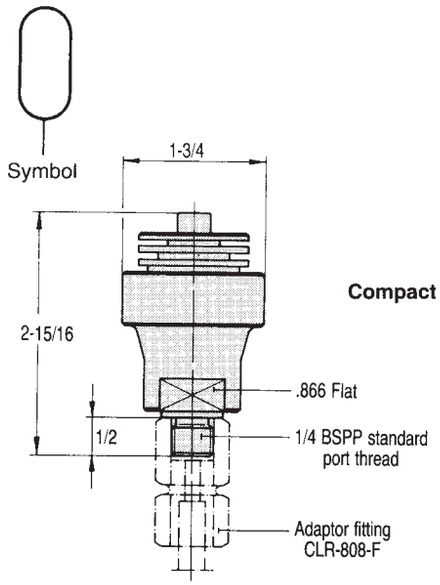

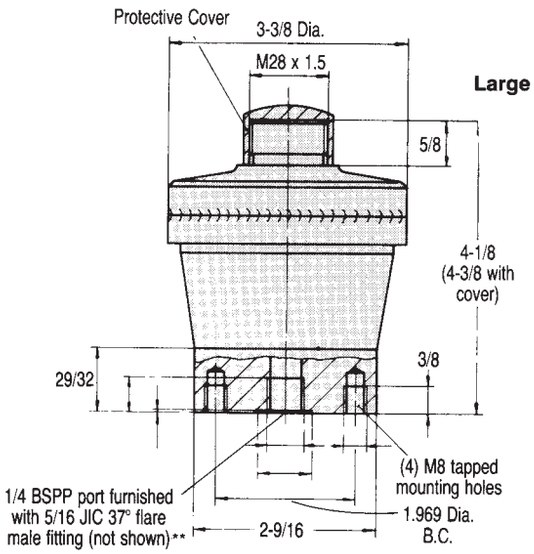

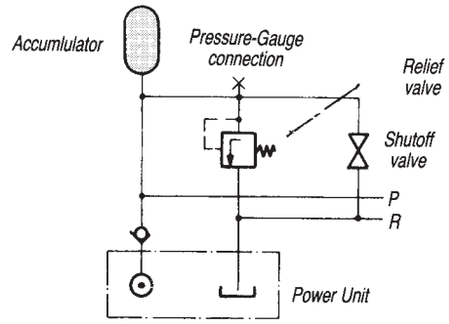

Example:
Accumulator circuit with all safety devices installed.

Size	Compact	Large
Maximum operating pressure (psi)	7500	7500
Minimum operating pressure (psi)	1800	1800
Accumulator volume at 7500 psi (cu. in.)	.60	3.4
Accumulator volume at 1800 psi (cu. in.)	.16	.9
Accumulator gas preload (psi)	1450	1450
Weight (lbs)	0.7	5.0
Part No.	**CLR-9606-102-PDA**	**CLR-500-PDA**

CARR LANE ROEMHELD MFG. CO.
Sales—Phone (314) 647-6200 Fax (314) 647-5736
Engineering—Phone 1-800-827-2526 Fax (636) 386-8034

Threaded Coupling Elements

7500 psi max

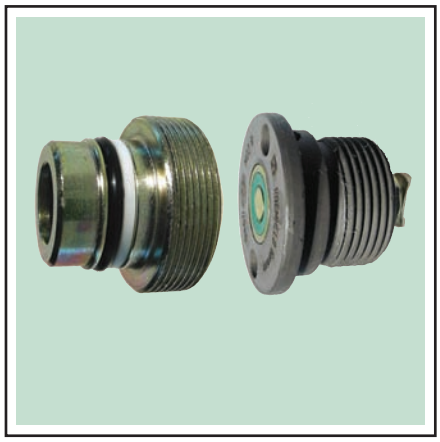

Manifold Mounted

- **Very compact coupling units**
- **Flush mounting in uncoupled mode**
- **Ideal for pallet coupling with vertical guided connection**
- **Optional return line relief**
- **Two sizes with and without coupling against pressure**

Depending on the version, the coupling elements can either be coupled in energized mode, or de-energized mode only. The operating mode depends on the type of sealing elements which are used and can be taken from the table below.

The max. positioning tolerances in axial and radial direction are indicated in the table below.

The sealing areas at the side of the coupling elements have to be cleansed before coupling, to ensure the tightness in coupled mode. We recommend to wash the elements and finally clean them with compressed air. Dust caps should be used as far as possible.

APPLICATION: Compared to other coupling elements the threaded coupling elements are very compact devices.

If the slide movement of the workpiece carrier is to be used or if a fixture is to be used or if a fixture is to be connected to the base plate without lines, the threaded nipple and the coupling mechanisms can be directly screwed into the parts which are to be connected. The coupling mechanisms have the advantage that they are flush-faced in uncoupled mode.

Flange-type housings are available to simplify the manufacture of the fixture mounting hole contours. In cramped conditions it is possible to make and install the flange-type housing retrospectively.

The fixture bodies which are to take up the coupling parts have to be guided .125 in. parallel before they are coupled.

The axial forces which arise during the pressure build-up in coupled mode (see diagram) have to be absorbed outside the coupling parts.

The threaded nipples, which are installed into the tank lines, are equipped with a pre-loaded valve (VSV). The pre-loaded valve limits a possible pressure build-up in the return line, caused by internal leakage in the hydraulic clamping elements, to approx. 75 psi. In coupled mode the pre-loaded valve is not effective.

Threaded nipple

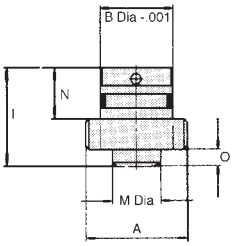

Coupling mechanism

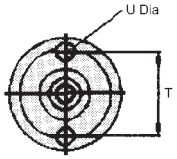

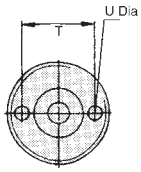

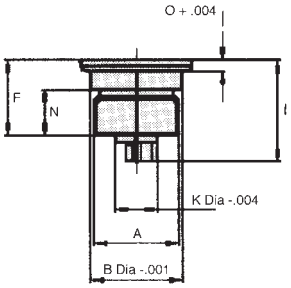

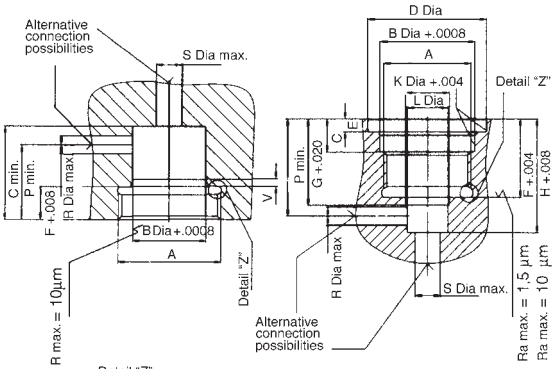

Manifold mounting holes

Element	Coupling mechanism	Threaded nipple	Threaded nipple with VSV	Coupling mechanism	Threaded nipple	Threaded nipple with VSV
Nominal ID	3mm			5mm		
p. max./min.	7500/450	7500/450	7500/450	7500/450	7500/450	7500/450
A	M20x1.5	M24x1.5	M24x1.5	M24x1.5	M28x1	M28x1
B Dia	.8661	.7874	.7874	1.0236	.7874	.7874
C	.138	1.063	1.181	.354	.945	1.181
D Dia	—	—	—	1.280	—	—
E	—	—	—	.138	—	—
F	.846	.394	.394	.846	.335	.335
G	.925	—	—	.925	—	—
H	1.22	—	—	1.22	—	—
I	1.15	1.16	1.34	1.15	1.06	1.280
K Dia	.472	—	—	.472	—	—
L Dia	.441	—	—	.441	—	—
M Dia	—	.59	.268	–	.531	.531
N	.73	.65	.65	.51	.55	.77
O	—	.177	.177	.126	.177	.177
P	1.10	.827	.98	1.10	.81	.81
R Dia	.197	.197	.197	.197	.197	.197
S Dia	.276	.276	.276	.276	.276	.276
T	.630	.670	.670	.945	.787	.787
U Dia	.138	.138	.138	.197	.157	.157
V	—	2x15°	2x15°	1x15°	2x15°	2x15°
max. position tolerance (axial)	+.020	+.020	+.020	+.020	+.020	+.020
max. position tolerance (radial)	+/-.004	+/-.004	+/-.004	+/-.008	+/-.008	+/-.008

Can be coupled with or without pressure

Part No.	CLR-0460-725-TBC	CLR-0460-727-TBN	-	CLR-0460-735-TBC	CLR-0460-638-TBN	-

Can only be coupled without pressure

Part No.	CLR-0460-730-TBC	CLR-0460-731-TBN	CLR-0460-728-TBN	CLR-0460-736-TBC	CLR-0460-740-TBN	CLR-0460-637-TBN

CARR LANE ROEMHELD MFG. CO.

Sales—Phone (314) 647-6200 Fax (314) 647-5736
Engineering—Phone 1-800-827-2526 Fax (636) 386-8034

Threaded Coupling Elements

Optional Housing for Coupling Mechanism

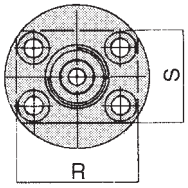

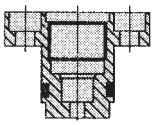

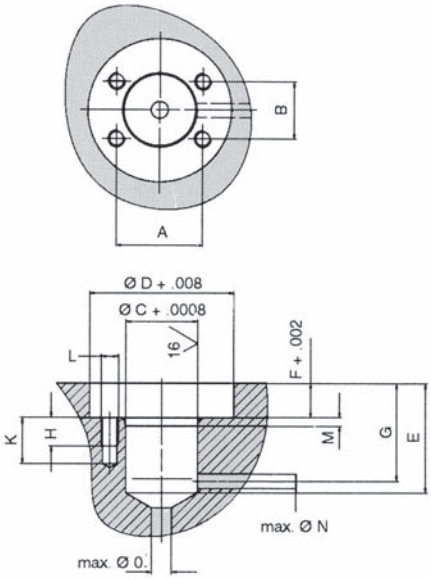

Coupling force

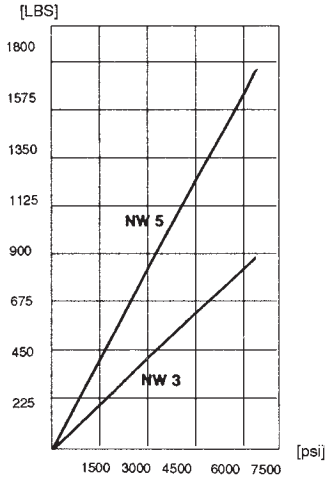

Δp-Q characteristic line for kinetic viscosity from $53x10^{-6}m^2/s$

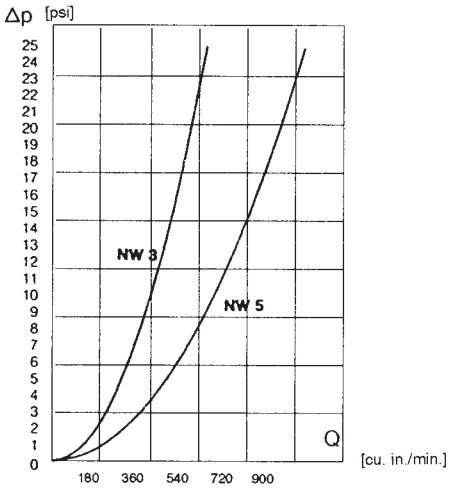

Mounting dimensions

If it is not required that the housing is flush-fitting with the pallet, the D dia. can be omitted.
The depth dimensions are then shortened by dimension F.
In cramped installation conditions the housing can be milled according to dimensions R and S.

Housings for Coupling Mechanisms

Useable for	CLR-0460-725-TBC	CLR-0460-735-TBC
A	1.181	1.693
B	.787	.906
C Dia	0.9843	1.2598
D Dia	1.9685	2.5591
E	1.50	1.50
F	0.472	0.591
G min.	1.34	1.38
H	0.39	0.47
K	0.63	0.71
L	1/4-20	5/16-18
M	0.12x15°	0.12x15°
N Dia max.	0.197	0.24
P Dia	0.28	0.28
R	1.65	2.36
S	1.26	1.57
Part no.	**CLR-0460-655-TBCH**	**CLR-0460-654-TBCH**

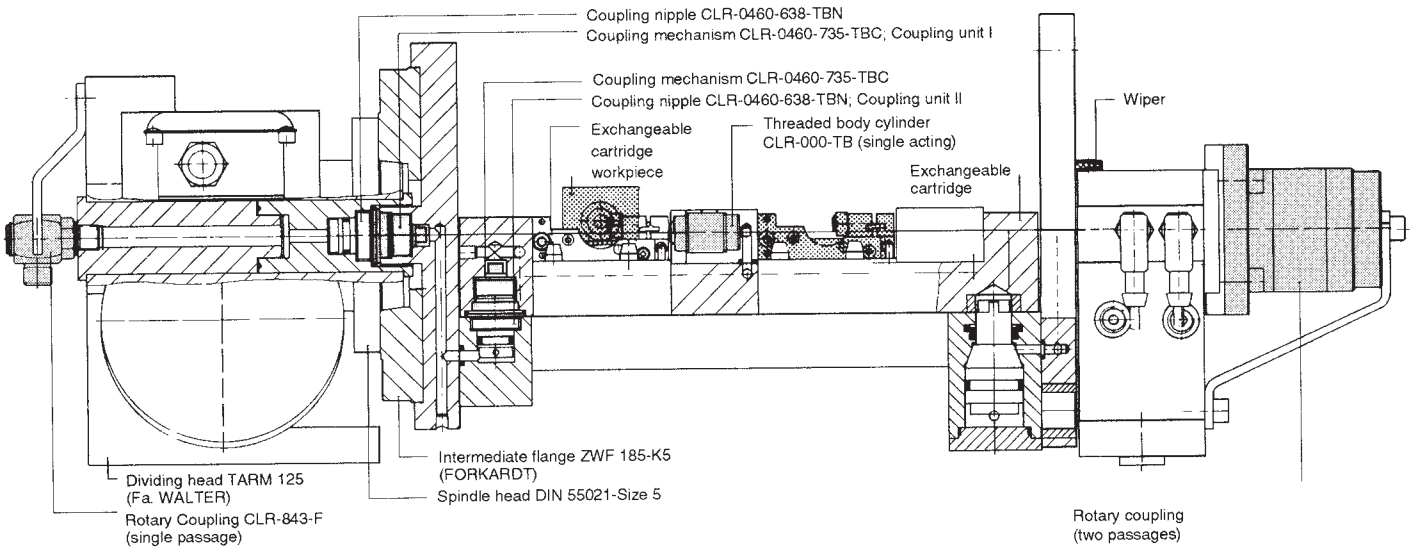

CARR LANE ROEMHELD MFG. CO.
Sales—Phone (314) 647-6200 Fax (314) 647-5736
Engineering—Phone 1-800-827-2526 Fax (636) 386-8034

Control Cylinders

7500 psi max

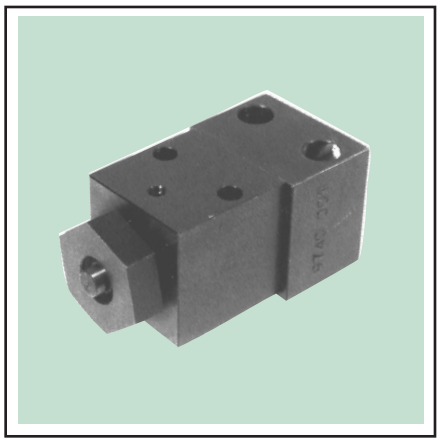

- **Pressure-indicating cylinder for monitoring pressure on decoupled pallets**
- **Plunger extends only when you exceed the set pressure**
- **Choice of high, medium or low pressure-monitoring range**
- **Choice of standard fittings or manifold mounting**

OPERATION: Unlike other clamps and cylinders, Control Cylinders do not extend immediately under low pressure. Their internal springs are calibrated to restrict plunger movement until a set pressure is reached. In fact, full plunger movement takes place entirely during a small 290 to 580 psi "switching range" (hysteresis) during which the plunger switches from fully in to fully out. By installing a limit switch fixed to the machine table, you can detect whether proper pressure is present or not.

SETTING: Select a Control Cylinder with setting range based on expected system operating pressure. Usually Control Cylinders can be set approximately 20% under full operating pressure, unless tighter control is required. For example, if maximum operating pressure will be 6000 psi, set Control Cylinder to finish retraction at 4800 psi (using either a high- or medium-range Control Cylinder). To set control pressure, turn front threaded bushing after loosening setscrew, then retighten setscrew.

MOUNTING: Fasten with two 1/4-20 socket-head cap screws. Dowel in place with two 6mm dowel pins. To manifold mount, order O-ring CLR-3000-347-SW, and counterbore mounting surface .531 / .535 dia x .057 / .061 deep under 3/16 dia passage.

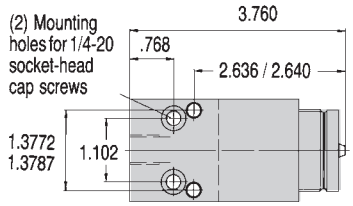

Standard Fittings

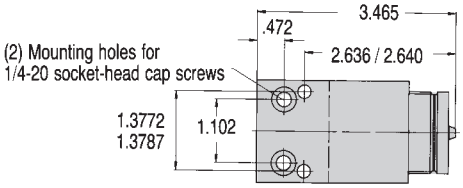

Manifold Mounting

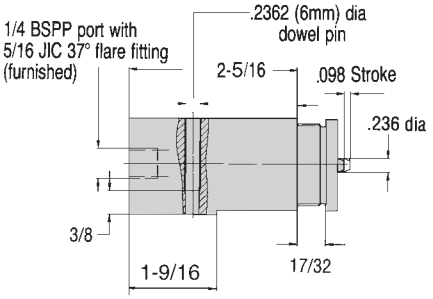

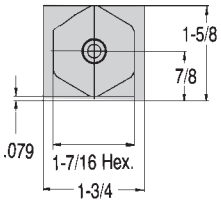

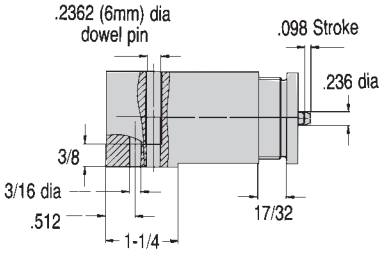

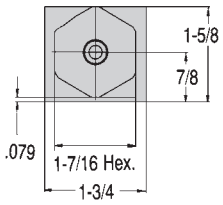

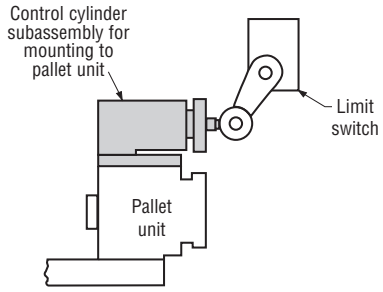

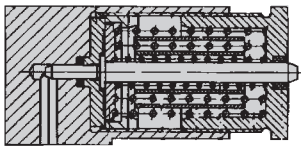

Limit switch mounted on machine table monitors clamping pressure by sensing the extended position of the Control Cylinder's plunger. If system pressure somehow drops below the set level, the plunger would retract.

Setting range (psi)	High	Medium	Low
	4350-7500	3200-5950	1400-2300
Max. operating pressure (psi)	7500	7500	7500
Switching range (psi)	290	440	580
Stroke	.098	.098	.098
Part No., standard fittings	**CLR-9740-802-CC**	**CLR-9740-803-CC**	**CLR-9740-804-CC**
Part No., manifold mounted	**CLR-9740-025-CC**	**CLR-9740-026-CC**	**CLR-9740-027-CC**
Control Cylinder Subassembly	**CLR-0974-000-CC**	**CLR-0974-002-CC**	**CLR-0974-003-CC**

Pressure Switches

7500 psi max
Single and double acting

TECHNICAL CHARACTERISTICS:

Configuration	Piston pressure switch
Type of mounting	2 screws M5x60 SW4 DIN 912-10.9 Retaining ring (included in the delivery)
Seating torque	3.7 Foot Pounds
Electrical connection	plug (Included in Delivery)
Code class	IP 65
Seal type	FKM
Switch type	Single pole

OPERATION: Pressure Switches are safety devices that signal the presence or absence of fluid pressure electrically, by opening or closing an electrical circuit.

APPLICATIONS:

1. Wire to machine-tool controller to ensure proper clamping pressure before machining starts.
2. To shut off machine if pressure drops below actuation-differential percentage during the machining cycle.

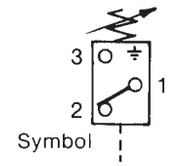

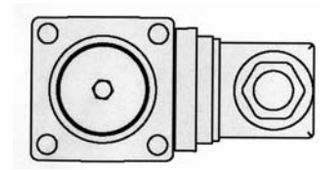

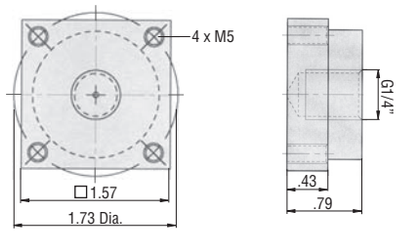

Optional Base

Electrical loading capacity

Silver contacts	Inductive load	Resistance load
30 V DC	3.0 A	4.0 A
250 V DC	0.2 A	0.2 A
250 V AC	2.0 A	3.0 A
125 V AC	3.0 A	5.0 A

Minimum loading capacity: 160 mA at 5 V DC

Gold contacts	Inductive load	Resistance load
30 V DC	—	0.1 A
125 V AC	—	0.1 A

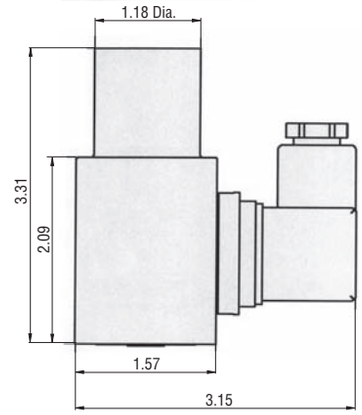

Pressure Switch

Switching Symbol for optional LED Plug

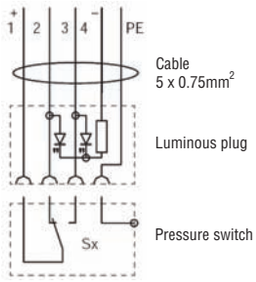

Adjustable Pressure Setting (psi)	70 to 2610	725 to 5075	1160 to 8700
Pressure differtial for actuation	<10%	<10%	<10%
Max. operating pressure (psi)	7500	7500	7500
Max. switching frequency (cycles/min.)	60	60	60
O-Ring Size	8x1.5mm	5x1.5mm	5x1.5mm
Weight (lbs)	1	1	1
Part No. Switch only	**CLR-9730-302-PS**	**CLR-9730-301-PS**	**CLR-9730-300-PS**
Part No. Switch with gold contacts	**CLR-9730-312-PS**	**CLR-9730-311-PS**	**CLR-9730-310-PS**
Part No. Base	**CLR-3534-051-PSA**	**CLR-3534-051-PSA**	**CLR-3534-051-PSA**
Part No. Optional Plug with LED	**CLR-3141-802-PSA**	**CLR-3141-802-PSA**	**CLR-3141-802-PSA**
Part No. Spare O-Ring	**CLR-3000-275-SW**	**CLR-3001-147-SW**	**CLR-3001-147-SW**

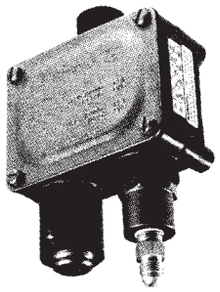

Pressure Switch Standard Fittings CLR-100-PS

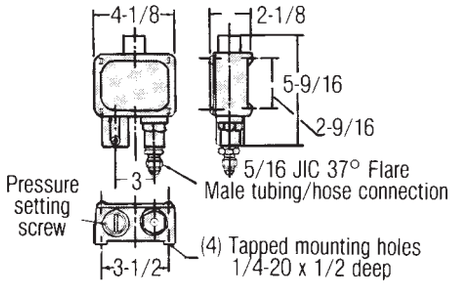

Pressure differential for actuation	7% at 7500 psi 14% at 1500 psi
Max. operating pressure (psi)	7500
Setting range (psi)	815-7500
Switch type	Single Pole
Maximum amperage	10
Weight (lbs)	2.5
Part No.	**CLR-100-PS**

CARR LANE ROEMHELD MFG. CO.
Sales—Phone (314) 647-6200 Fax (314) 647-5736
Engineering—Phone 1-800-827-2526 Fax (636) 386-8034

Accessories

Air Filter/Regulator/Lubricator

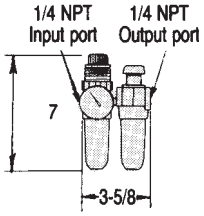

CLR-100-FRL
Recommended for all incoming air-pressure lines (included with air power unit). Filter removes solid contaminates and water from the air supply. Lubricator provides an oil mist to lubricate the system. Regulator is essential to control input air pressure, and thereby control output fluid pressure.

Fine Air-Pressure Regulator

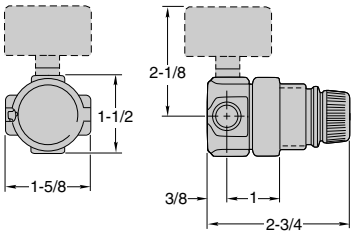

CLR-200-FR
Miniature regulator for adjusting air pressure between 1 and 10 psi (30 psi gauge). Use with air-advanced work supports to finely adjust contact force. 1/4 NPT ports.

Air Extractor/Dryer

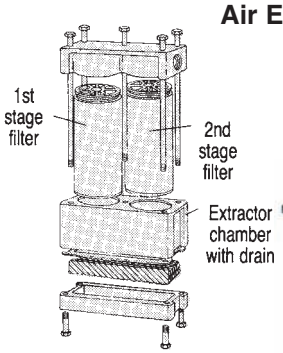

CLR-105-AED
Effective extractor/dryer that removes air moisture and dirt to increase the life of air-powered components. Replace or clean 1st-stage filter yearly (part no. CLR-401-AEDA, black) Replace 2nd-stage filter every 4-6 months (part no. CLR-402-AEDA, red).

Air Flow-Control Valve

CLR-100-AFC
Simple valve to reduce air flow rates and reduce clamping speed. Release air pressure to adjust setting.

Fluid 6-Port Manifolds

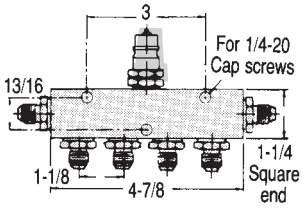

CLR-106-F
(6) Male 37° fittings (1) Male quick disconnect
CLR-107-F
(7) Male 37° fittings
CLR-106-BP
(7) 1/4 BSPP ports, without fittings

Fluid 4-Port Manifolds

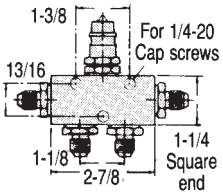

CLR-104-F
(4) Male 37° fittings (1) Male quick disconnect
CLR-105-F
(5) Male 37° fittings
CLR-104-BP
(5) 1/4 BSPP ports, without fittings

Fluid Pressure Gauges

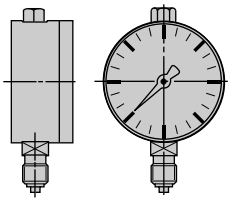

CLR-100-GA
Gauge only without adaptor

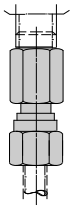

CLR-808-F
Female gauge adaptor Compression type

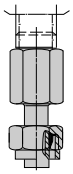

CLR-9208-041-F
Male gauge adaptor Compression type

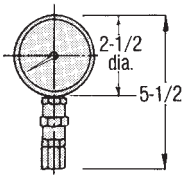

CLR-101-GA
Gauge with Female 37° fitting

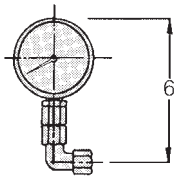

CLR-102-GA
Gauge with Elbow Female 37° fitting

Quick Disconnects

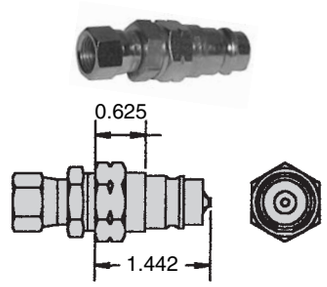

Fig 1

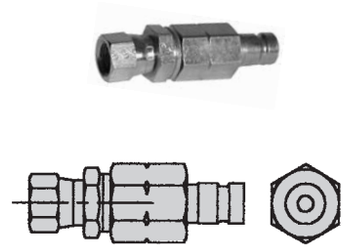
Fig 2

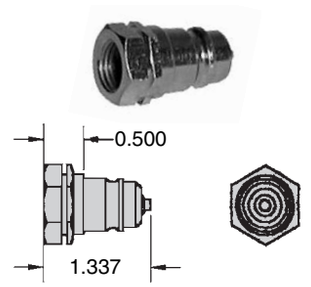

Fig 3

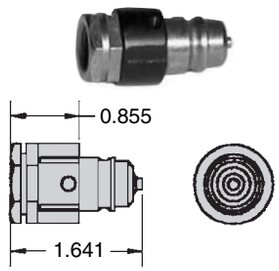

Fig 4

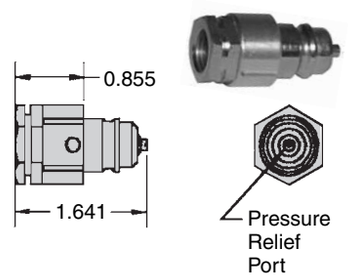

Fig 5

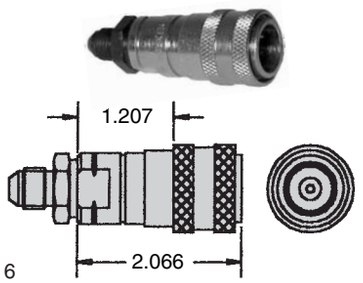

Fig 6

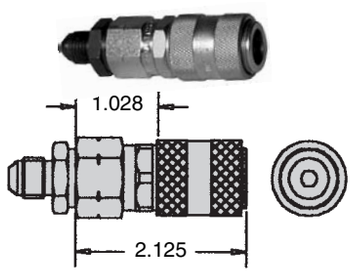

Fig 7

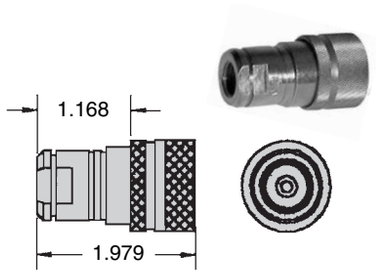

Fig 8

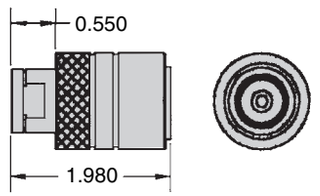

Fig 9

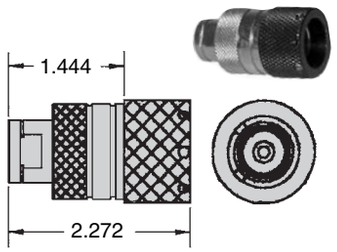

Fig 10

Part No.	Figure	Comments	Compatability
CLR-200-F	Fig #1	Standard Nipple	Fig #6
CLR-202-F	Fig #6	Pull Coupler Sleeve Back Insert On Nipple and Release. Reverse Action To Uncouple.	Fig #1
CLR-220-F	Fig #2	Non-Spill Nipple	Fig #7
CLR-222-F	Fig #7	Coupling - Hold Stem of Coupler and Push, To Uncouple Pull Back Sleeve.	Fig #2
CLR-9384-206-F	Fig #3	Heavy Duty Nipple	Fig #9
CLR-9384-100-F	Fig #8	Pull Coupler Sleeve Back Insert on Nipple and Release. Reverse Action To Uncouple.	Fig #3
CLR-9384-106-F	Fig #9	Push Coupler Sleeve on Nipple and Release. Reverse Action To Uncouple.	Fig #3
CLR-9384-7x7-F	Fig #4	* Color Coded Nipple with Alignment Pin Slots	Fig #10
CLR-9384-7x6-F	Fig #10	* Match Color and Alignment Pins. Pull Coupler Sleeve Back Insert on Nipple & Release. Reverse Action to Uncouple.	Fig #4 & 5
CLR-9384-727-F	Fig #5	White Coded Nipple with Alignment Pin Slots & VSV Valve	Fig #10

** Reference "X" in part number: 1 = Black, 2 = White, 3 = Red, 4 = Yellow, 5 = Green, 6 = Blue*

High Pressure Inline Filters

7500/3000 psi max

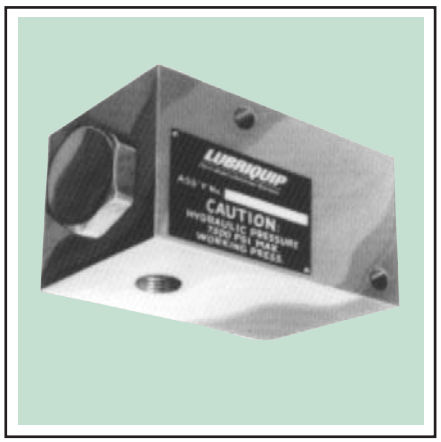

CLR-000-V

CLR-100-V

CLR-3887-064-V

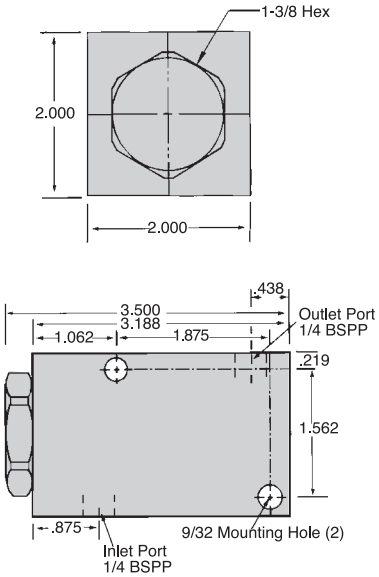

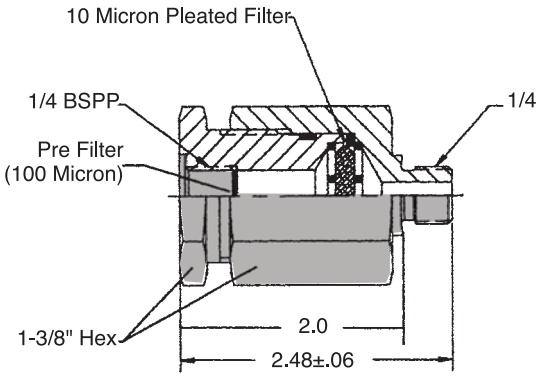

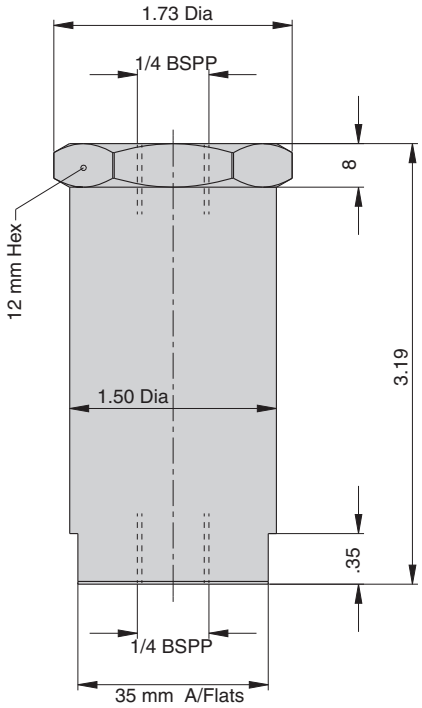

- **Replaceable filter elements**
- **Simple and compact in design**
- **Easy to install on any new or existing system**
- **Do not use NPT fittings**

OPERATION: Install the filter in the output line of the pump to provide filtration of the oil entering the system. The oil passes through the filter assembly from inlet port to outlet port.

CAUTION: Do not attempt to replace filter element with pressure in system.

Recommended mouting position is with filter body vertical, plug on the bottom. This mounting position allows contaminated filter elements to be changed without removing existing piping or tubing. Simply remove the end plug, spring, and spring retainer to get at the filter element.

CAUTION: Mounting position other than as recommended…remove entire filter assembly for servicing.

Pre Filter (100 micron)

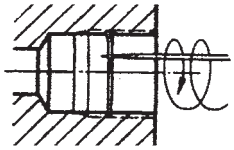

Pre Filter Installations

Max. Oper. Pressure (psi)	7500	7500	5000
Filter Rating (Nom. Filtration)	10 microns	10 microns	10 microns
Typical Flow Rate (cu. in./min.)	120*	230	120
Direction of Flow	Either direction	Either direction	Either direction
Material (Body)	Steel	Steel	Steel
Weight (lbs)	3	.75	1
Part No.	**CLR-000-V**	**CLR-100-V**	**CLR-3887-064-V**
Part No. of Filter Element	**CLR-001-FIL**	**CLR-100-FIL**	**CLR-3887-061-FIL**
Part No. of Pre-Filter	**—**	**CLR-3887-009-FIL**	**—**

**AP 35 psi across filter*

SWIFTSURE®

CARR LANE ROEMHELD MFG. CO.

Sales—Phone (314) 647-6200 Fax (314) 647-5736
Engineering—Phone 1-800-827-2526 Fax (636) 386-8034

Fixture Hose

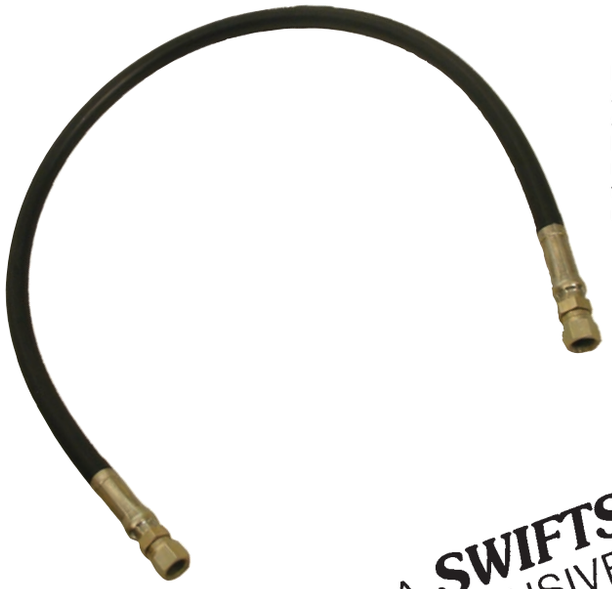

Exclusive small-diameter high-pressure hose perfect for workholding applications. Easy to fit into tight spots. Braided steel covering protects against damage from heat or abrasion. 30,000 psi certifiable minimum burst pressure. 5/32" ID, .090" wall thickness. 1-5/8" minimum bend radius. –40°F to 212°F operating temperature. Minimum orifice of 2mm at the stems. Two female ends, 5/16 JIC 37° flare, or straight tube ends for use with compression fittings.

A SWIFTSURE EXCLUSIVE!

Standard lengths	JIC 37° flare	Compression type
9"	**CLR-9-FH**	**CLR-9-FH-CC**
12"	**CLR-12-FH**	**CLR-12-FH-CC**
15"	**CLR-15-FH**	**CLR-15-FH-CC**
18"	**CLR-18-FH**	**CLR-18-FH-CC**
24"	**CLR-24-FH**	**CLR-24-FH-CC**

Special lengths readily available with fast delivery

XX"	**CLR-XX-FH**	**CLR-XX-FHCC**

Tubing

Seamless heavy-wall tubing. C1010 steel, cold drawn, fully annealed. 5/16" OD, .065" wall thickness, 22,800 psi burst pressure. Do not use any other type of tubing. See page 123 for installation guidelines and tools (CLR-300-TL flaring tool is strongly recommended).

60"	**CLR-60-T**

Heavy-Duty Hose

High-pressure hydraulic hose. 1/4" inside diameter. 28,000 psi minimum burst pressure. Reinforced with four plies of high-tensile wire, for remarkably little expansion under pressure. Fluid required due to expansion is only .066 cu. in. per foot at 7500 psi. 5" minimum bend radius. Two female ends, 5/16 JIC 37° flare, or straight tube ends for use with compression fittings.

NOTE! 10'-0" MAXIMUM RECOMMENDED LENGTH

	JIC 37° flare	Compression Type
18"	**CLR-18-H**	**CLR-18-H-CC**
24"	**CLR-24-H**	**CLR-24-H-CC**
30"	**CLR-30-H**	**CLR-30-H-CC**
36"	**CLR-36-H**	**CLR-36-H-CC**
42"	**CLR-42-H**	**CLR-42-H-CC**
48"	**CLR-48-H**	**CLR-48-H-CC**
60"	**CLR-60-H**	**CLR-60-H-CC**
72"	**CLR-72-H**	**CLR-72-H-CC**

(Special lengths available)

Hydraulic Fluid

As per DIN 51524, HLP. Contains special additives for proper lubrication and corrosion protection. Use only SWIFTSURE fluid or an exact equivalent HLP 22: Shell Tellus® 22, Mobil DTE 22, or Chevron Hydraulic Oil AW ISO 22. **Fluid must be clean (10 micron or better nominal filtration) See also high pressure in-line filters.**

2 gal.	**CLR-2-FL**

Hydraulic Fittings – Compression Type

5/16-inch O.D. tubing, 7500 psi hydraulic

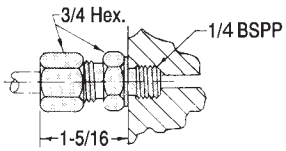

CLR-802-F
Port Fitting
Compression Type

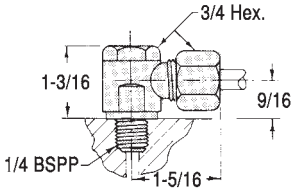

CLR-803-F
Banjo Elbow
Compression Type

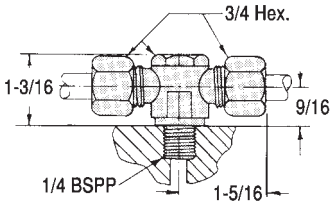

CLR-804-F
Branch Tee
Compression Type

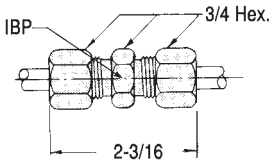

CLR-701-F
Union
Compression Type

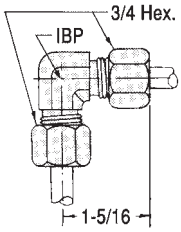

CLR-702-F
Elbow
Compression Type

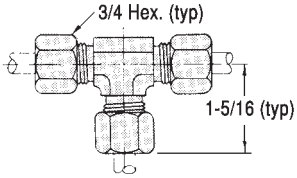

CLR-703-F
Tee
Compression Type

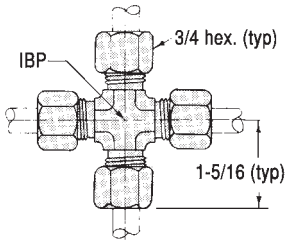

CLR-704-F
Cross
Compression Type

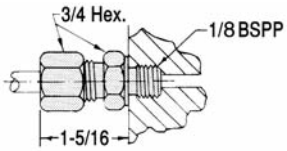

CLR-9208-116-F
1/8 BSPP Port Fitting
Compression Type

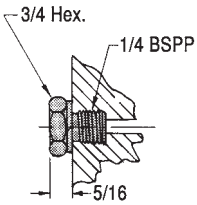

CLR-810-F
Port Plug

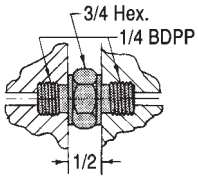

CLR-809-F
Double Port Fitting

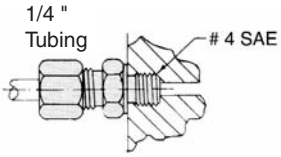

CLR-806-F
Port Fitting
1/4" Tubing Compression Type

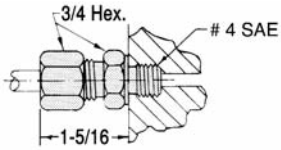

CLR-942-F
#4 SAE Port Fitting
Compression Type
(5000 psi max)

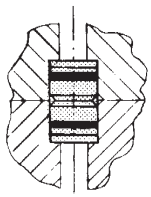

CLR-901-F
Connecting Insert

Use to connect fluid passages which pass through two pieces of the fixture (see drawing at left). Insert has O-ring seals, top and bottom. Gap between plates must be less than 3/16 inch. Drill and ream passage to .375 dia. – .000/+.001, 3/8 deep on each side. Do not use sealing compound or teflon tape.

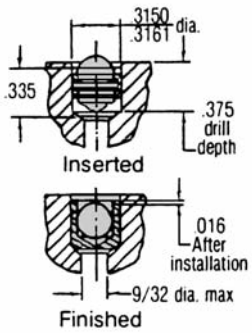

CLR-906-F
Expanding Plug

Use to plug drilled manifold passages. Drill .3150/.3161 diameter hole to .375 depth. Insert Expanding Plug to bottom of drill-point. Drive ball to depth shown for proper sealing. Do not use sealing compound or teflon tape.

Hydraulic Fittings – 37° Flare

5/16-inch O.D. tubing, 7500 psi hydraulic

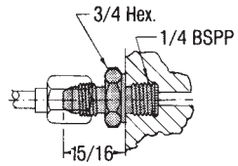

CLR-807-F
Port Fitting
37-Degree Flare

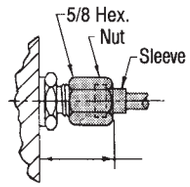

CLR-400-F
Tube End
37-Degree Flare

CLR-813-F
Port Fitting
37-Degree Flare Female

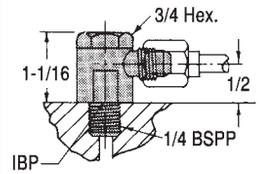

CLR-814-F
Banjo Elbow
37-Degree Flare

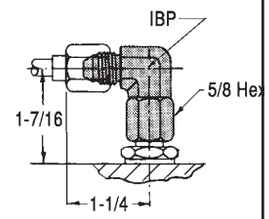

CLR-402-F
Nut Elbow
37-Degree Flare

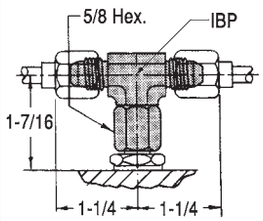

CLR-403-F
Branch Tee
37-Degree Flare

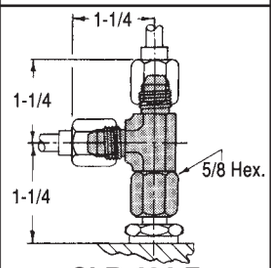

CLR-404-F
Run Tee
37-Degree Flare

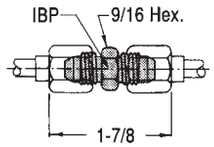

CLR-301-F
Union
37-Degree Flare

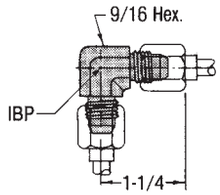

CLR-302-F
Elbow
37-Degree Flare

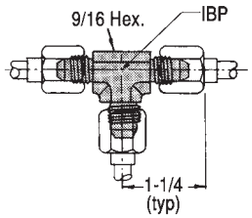

CLR-303-F
Tee
37-Degree Flare

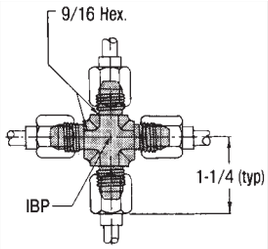

CLR-304-F
Cross
37-Degree Flare

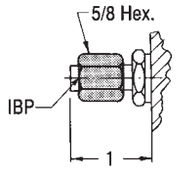

CLR-501-F
Cap
37-Degree Flare

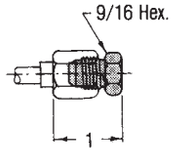

CLR-502-F
Tube Plug
37-Degree Flare

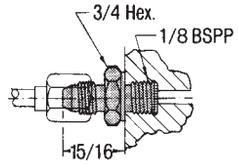

CLR-903-F
1/8 BSPP Port Fitting
37-Degree Flare

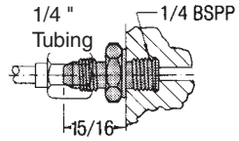

CLR-816-F
Port Fitting
1/4" Tubing, 37-Degree Flare

Air-Vent Fittings

250 psi max air

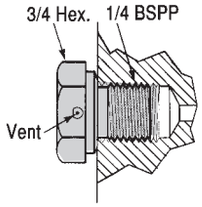

CLR-817-AF
Air-Vent Plug

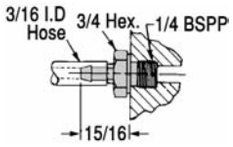

CLR-815-AF
Air-Vent Hose Fitting

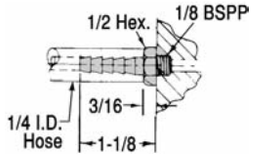

CLR-806-AF
1/8 BSPP Air-Vent Hose Fitting

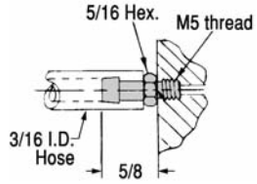

CLR-805-AF
M5 Air-Vent Hose Fitting

Tubing Installation

CLR-100-TL
Tubing Cutter

Cutting

1. Use only steel tubing as specified on page 120.
2. Cut tubing with a tubing cutter or hacksaw.
3. File or sand tubing end square. End must be square to achieve a proper flare.

CLR-200-TL
Deburring Tool

Deburring and Cleaning

1. Deburr both ID and OD with deburring tool.
2. Clean with solvent to remove chips, dirt and rust-preventative coating. Blow clean with an air line.

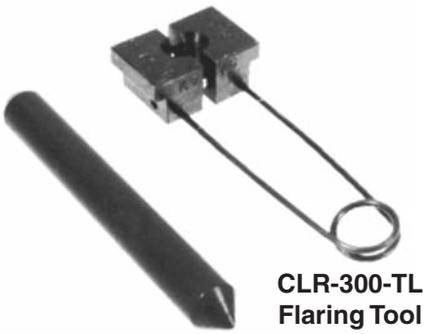

CLR-300-TL
Flaring Tool

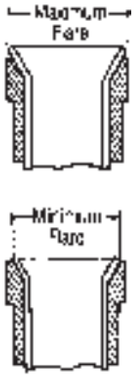

Flaring

1. Place nut and sleeve over tube before flaring.
2. Place tube in flaring tool, approximately 1/8" above top of block.
3. Clamp assembled block in vise.
4. Center pin guide of flaring tool in tube.
5. Strike flaring tool 3-4 times with sharp hammer blow. Remove from block.
6. Inspect flare so that their outside diameters extend beyond the inner lip of the sleeve, but not beyond the sleeve's OD.

CLR-400-TL
Tubing Bender

Bending

Tools required:

– Tube bender (3/4" radius)

– Vise

The ***SWIFTSURE*** tube bender shown is a simple, effective bender we highly recommend. When bending tubing carefully avoid wrinkling, flattening or kinking the tube. Please note: complete flaring before bending.

Tubing Installation

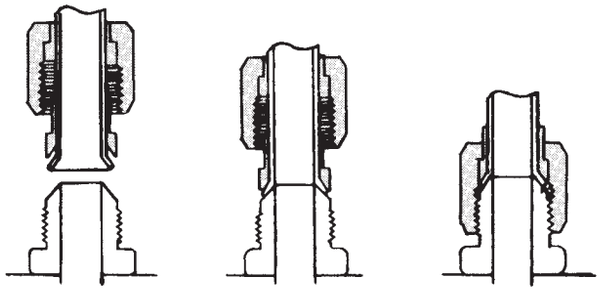

Assembly

1. Slide nut and sleeve on to flared tubing end and finger tighten.
2. Finish tightening with a wrench, 1/4 to 1/2 turn.

   Note: Do not over torque.

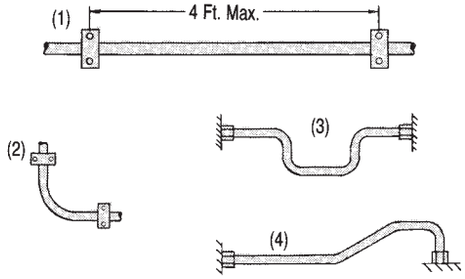

Installation

We recommend using tubing clamps as this will increase the life of the installation. Tubing clamps should be less than four feet apart (Figure 1 – left) and bends should be supported also (Figure 2). Use bends as shown in Figures 3 and 4 instead of straight-line connections to prevent stressing the tubing.

Important: Never use tubing lines as handles to lift fixtures.

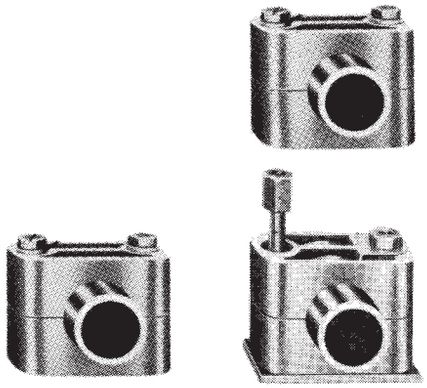

Single Tube
Regular and Stack Mounting

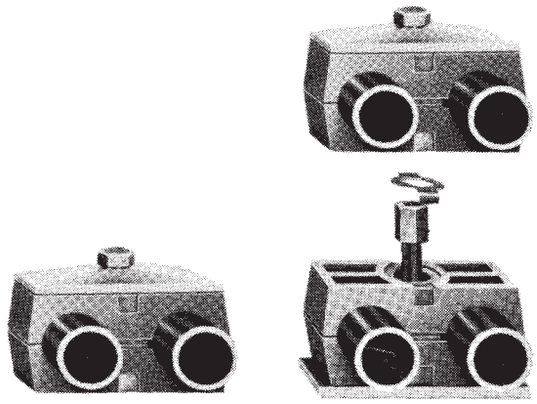

Twin Tubes
Regular and Stack Mounting

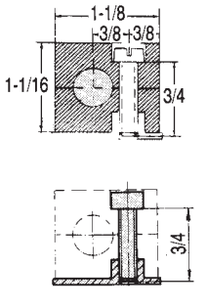

CLR-3300-892-TA Single clamp
CLR-3300-600-TA Single mounting plate
CLR-3300-225-TA Mounting screw
CLR-3300-604-TA Stack-mounting screw
CLR-3300-335-TA Stack-mounting clip

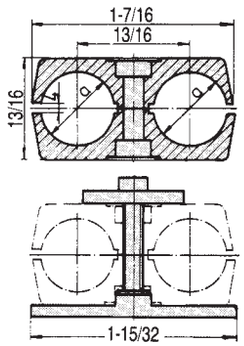

CLR-3300-891-TA Twin clamp
CLR-3300-607-TA Twin mounting plate
CLR-3300-609-TA Washer
CLR-3300-225-TA Mounting screw
CLR-3300-613-TA Stack-mounting screw
CLR-3300-615-TA Stack-mounting clip

Contact Bolts

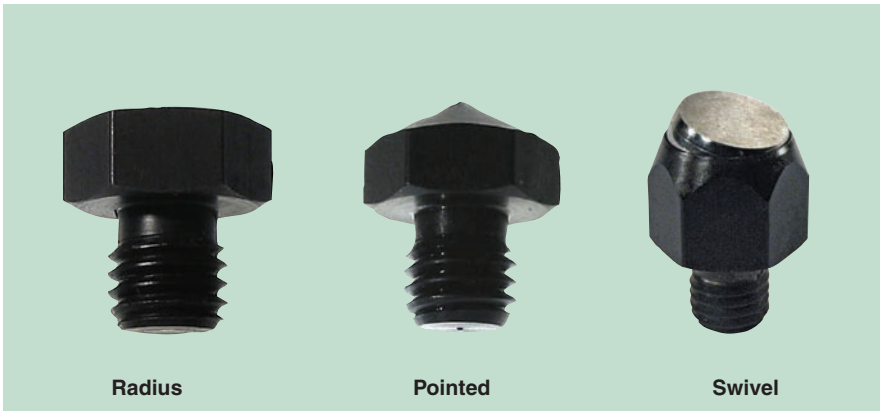

- **Radius contact bolt for most applications**
- **Pointed contact bolt for clamping in holes, and point clamping**
- **Swivel contact bolt distributes clamping force to prevent marring**
- **1144 steel, hardened 50-60 RC**

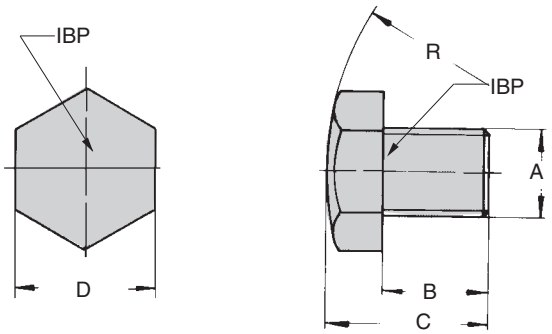

Radius

Part No.	A	B	C	D Hex	R Radius
CLR-401-CB	1/4-20	1/4	3/8	7/16	25/32
CLR-400-CB		3/8	25/32		
CLR-404-CB	5/16-18	5/16	1/2	1/2	1
CLR-402-CB		3/8	25/32		25/32
CLR-403-CB	3/8-16	1/2	7/8	9/16	1-3/8
CLR-405-CB	1/2-13	1/2	7/8	3/4	1-3/4
CLR-406-CB	5/8-11	25/32	1-3/16	15/16	2-3/8
CLR-408-CB	3/4-10	1	1-3/8	1-1/8	2-3/8
CLR-409-CB	1-8	1-3/16	1-27/32	1-1/2	3-15/16
CLR-3614-027-CB	M5	.35	.75	8mm	.79
CLR-3614-039-CB*	M6	.24	.37	10mm	.79
CLR-3614-016-CB		.39	.79		
CLR-3614-038-CB*	M8	.31	.51	13mm	.98
CLR-3614-001-CB		.39	.79	11mm	.79
CLR-3614-002-CB	M10	.47	.87	17mm	1.38
CLR-3614-028-CB	M12	.47	.87	19mm	1.77
CLR-3614-015-CB	M20	.98	1.38	30mm	2.36
CLR-3614-018-CB	M30	1.38	2.13	46mm	3.94
CLR-3614-019-CB	M42	1.77	2.80	65mm	5.51
CLR-3614-020-CB	M48	2.36	3.54	75mm	9.84

** These sizes are not heat treated.*

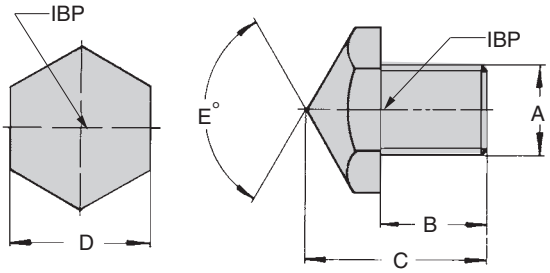

Pointed

Part No.	A	B	C	D Hex	E°
CLR-413-CB	1/4-20	1/4	3/4	7/16	90
CLR-414-CB	3/8-16	1/2	1-1/16	9/16	90
CLR-415-CB	1/2-13	1/2	1	3/4	120
CLR-416-CB	5/8-11	25/32	1-3/8	15/16	120
CLR-417-CB	3/4-10	1	1-9/16	1-1/8	120
CLR-418-CB	1-8	1-3/16	1-31/32	1-1/2	120
CLR-3614-033-CB	M5	.35	.63	8mm	120°
CLR-3614-068-CB	M6	.24	.71	10mm	90°
CLR-3614-032-CB		.39	.87		
CLR-3614-069-CB	M8	.31	.87	13mm	90°
CLR-3614-021-CB	M10	.47	1.06	17mm	90°

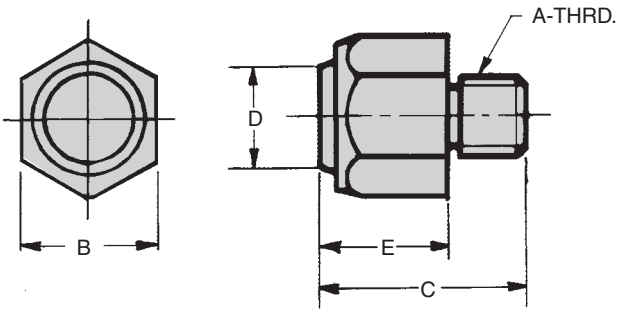

Swivel

Part No.	A Dia	B Hex	C	D Dia	E
CLR-420-CB	5/16-18	9/16	.82	13/32	1/2
CLR-421-CB	3/8-16	13/16	1.29	19/32	13/16
CLR-422-CB	1/2-13	7/8	1.23	5/8	13/16
CLR-423-CB	5/8-11	1-1/16	1.61	13/16	1
CLR-3614-228-CB	M6	11mm	21mm	7.2mm	13mm
CLR-3614-072-CB	M8	11mm	21mm	7.2mm	13mm
CLR-3614-073-CB	M10	17mm	28mm	10,5mm	18mm
CLR-3614-074-CB	M12	17mm	30mm	10.5mm	18mm

CARR LANE ROEMHELD MFG. CO.
Sales—Phone (314) 647-6200 Fax (314) 647-5736
Engineering—Phone 1-800-827-2526 Fax (636) 386-8034